Santa Fe Engineering Consultants, LLC

SANTA FE COUNTY ID# 6197	SHEET NO.
PN: 2014-6197-PW/PL	9-5

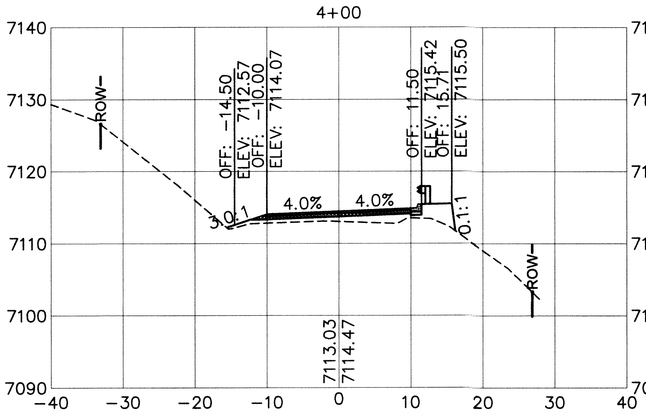

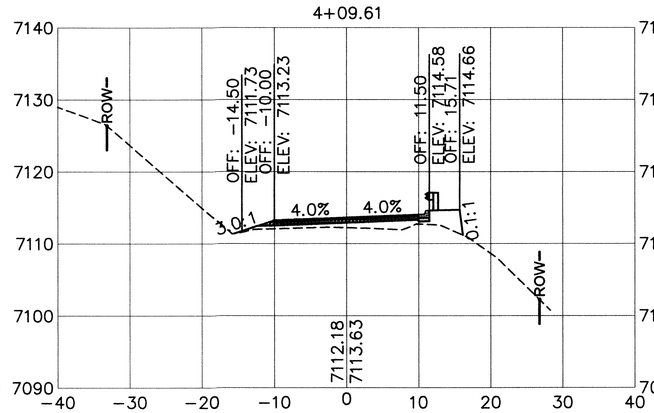

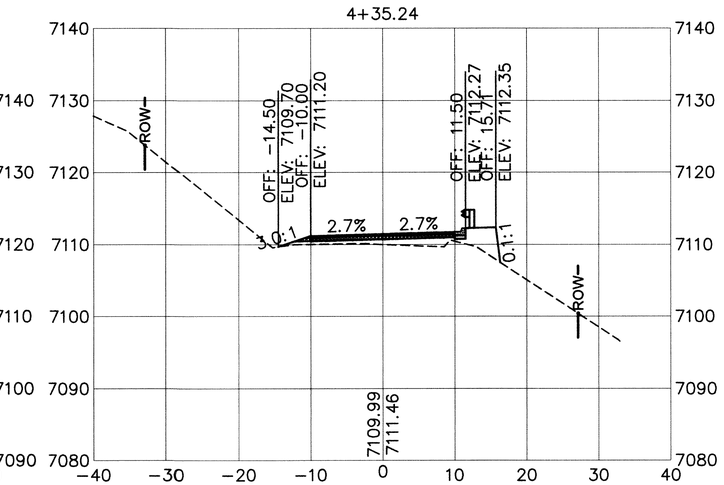

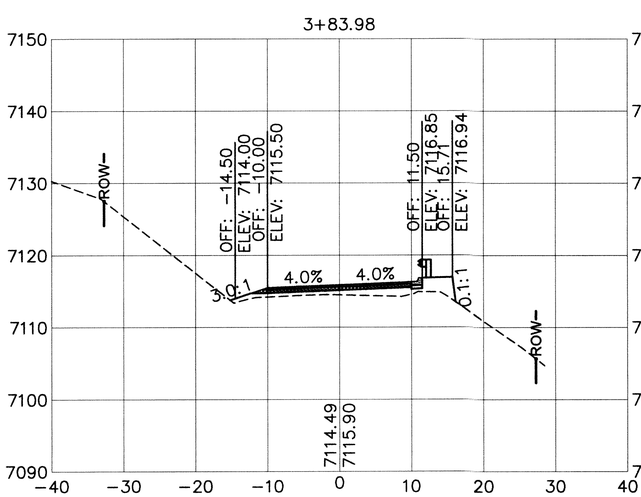

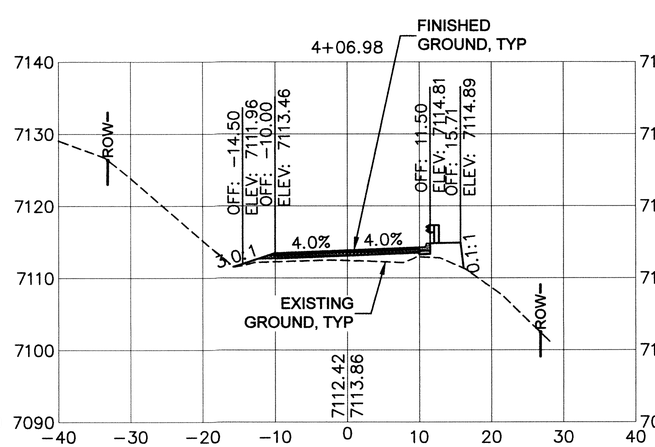

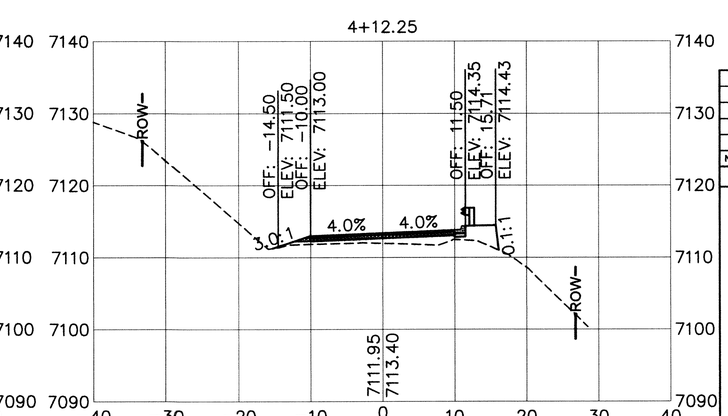

0 5 10 20
SCALE: 1" = 10'

NO.	DESCRIPTION	DATE	BY
5			
4			
3			
2			
1			

REVISIONS (OR CHANGE NOTICES)

Santa Fe County

ROADWAY IMPROVEMENT PLANS
FOR VISTA REDONDA
SUBDIVISION ROADS
PN: 2014-6197-PW/PL
100% DESIGN

ROADWAY CROSS SECTIONS
PASEO ENCANTADO SW (CONT'D)
(BASE BID)

DATE:	SCALE:	SHEET:
MARCH 2015	1" = 10'	9-5

Santa Fe Engineering Consultants, LLC

SANTA FE COUNTY ID# 6197	SHEET NO.
PN: 2014-6197-PW/PL	9-6

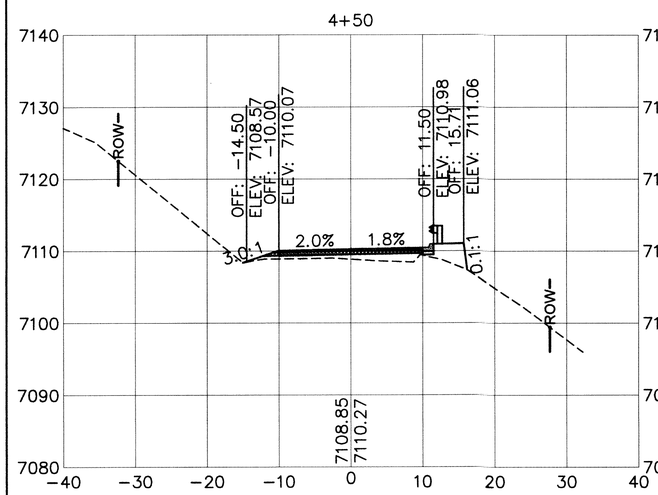

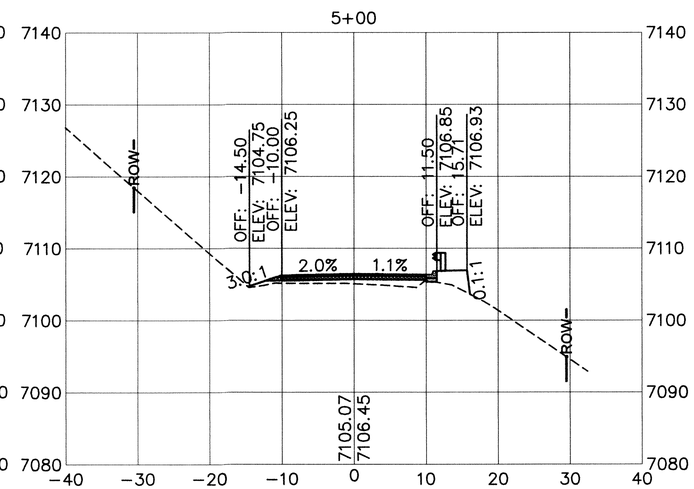

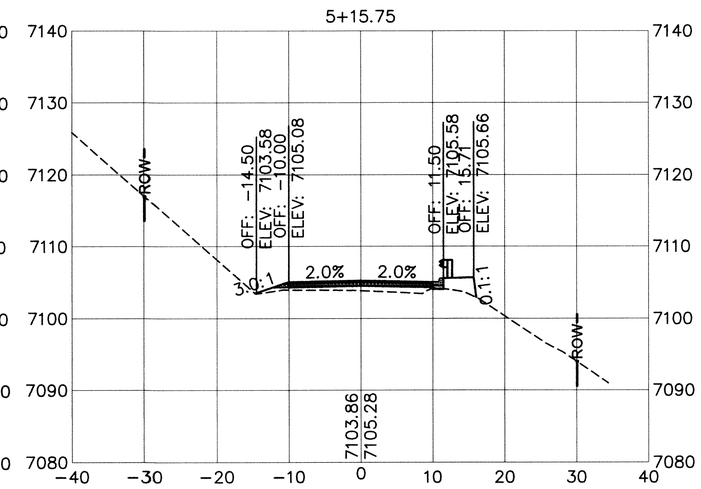

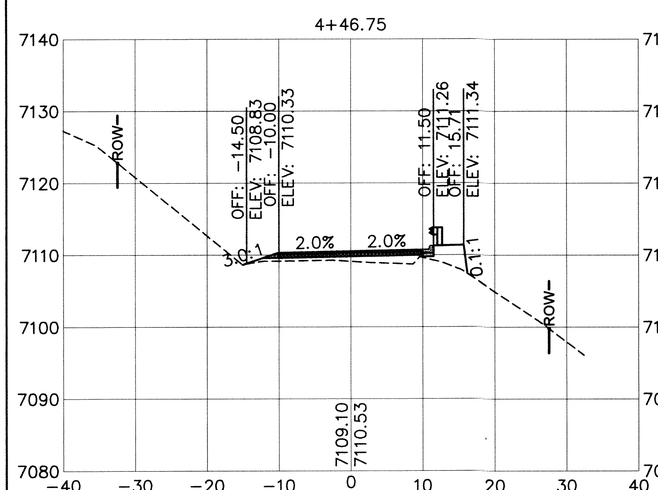

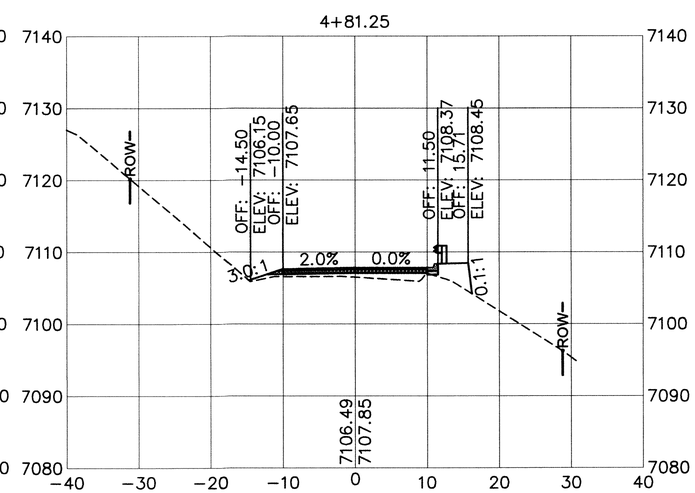

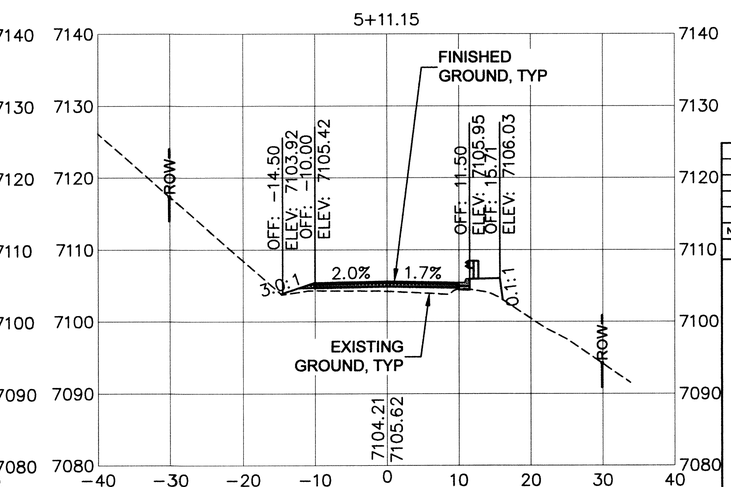

0 5 10 20
SCALE: 1" = 10'

NO.	DESCRIPTION	DATE	BY
5			
4			
3			
2			
1			

REVISIONS (OR CHANGE NOTICES)

Santa Fe County

ROADWAY IMPROVEMENT PLANS
FOR VISTA REDONDA
SUBDIVISION ROADS
PN: 2014-6197-PW/PL
100% DESIGN

ROADWAY CROSS SECTIONS
PASEO ENCANTADO SW (CONT'D)
(BASE BID)

DATE:	SCALE:	SHEET:
MARCH 2015	1" = 10'	9-6

Santa Fe Engineering Consultants, LLC

SANTA FE COUNTY ID# 6197	SHEET NO.
PN: 2014-6197-PW/PL	9-7

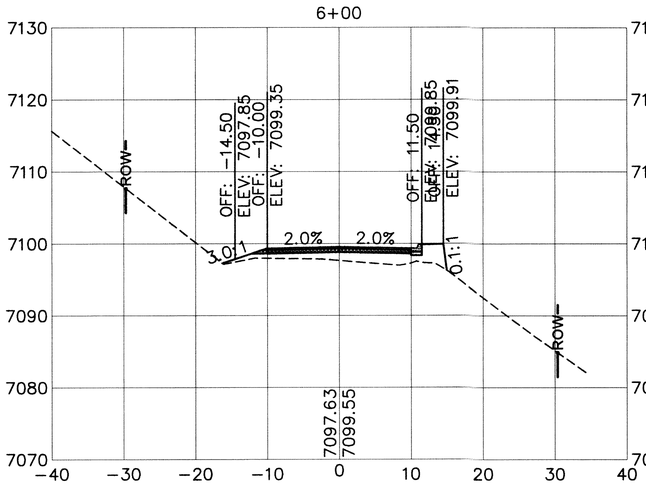

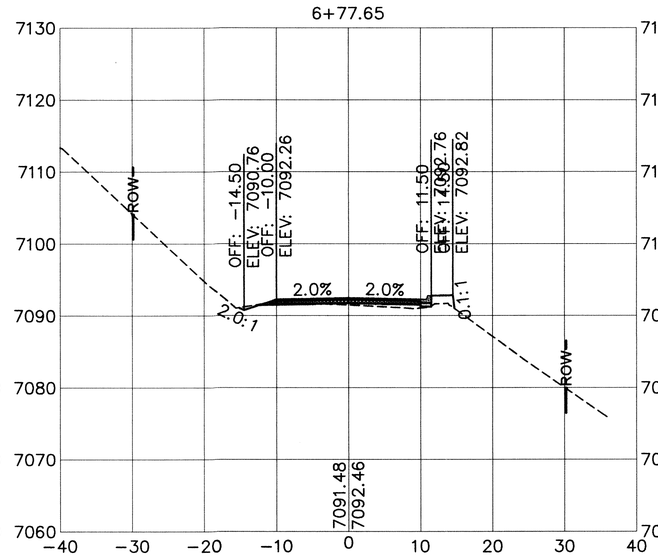

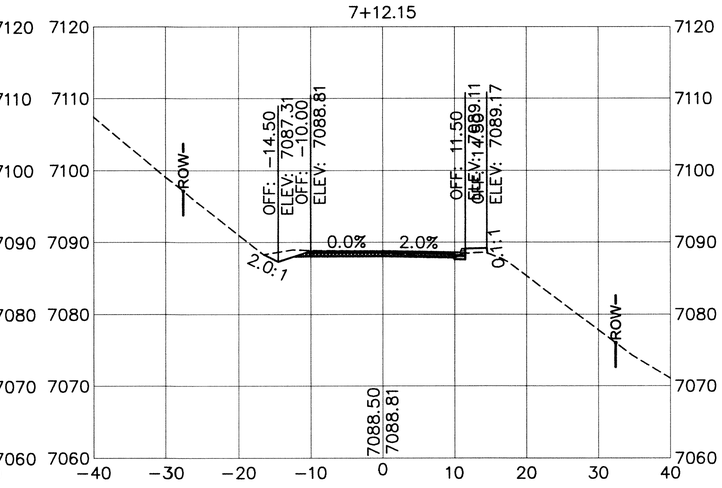

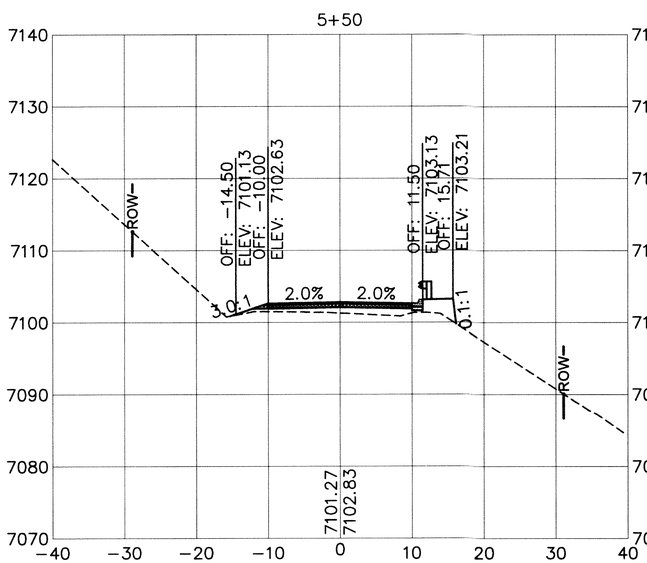

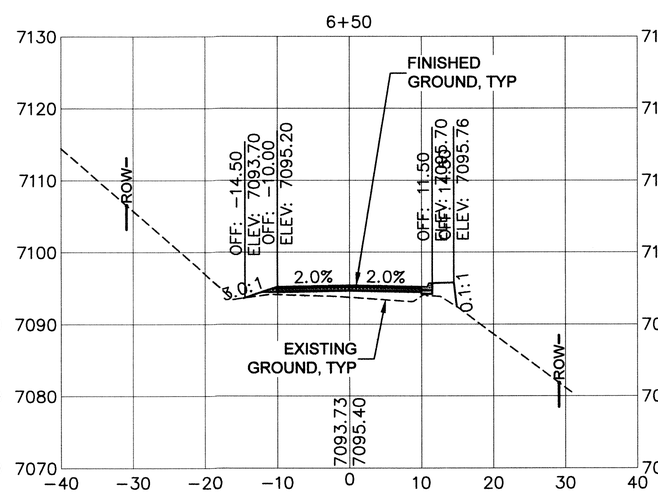

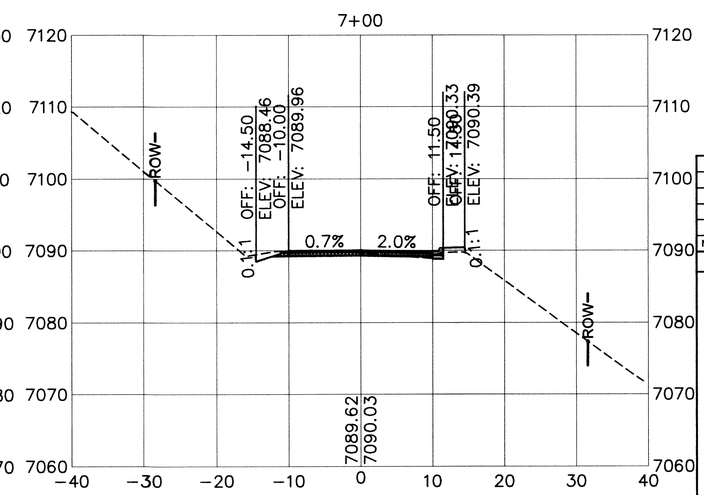

0 5 10 20
SCALE: 1" = 10'

NO.	DESCRIPTION	DATE	BY
5			
4			
3			
2			
1			

REVISIONS (OR CHANGE NOTICES)

Santa Fe County

ROADWAY IMPROVEMENT PLANS
FOR VISTA REDONDA
SUBDIVISION ROADS
PN: 2014-6197-PW/PL
100% DESIGN

PASEO ENCANTADO SW (CONT'D)
(BASE BID)

DATE:	SCALE:	SHEET:
MARCH 2015	1" = 10'	9-7

Santa Fe Engineering Consultants, LLC

SANTA FE COUNTY ID# 6197	SHEET NO.
PN: 2014-6197-PW/PL	9-8

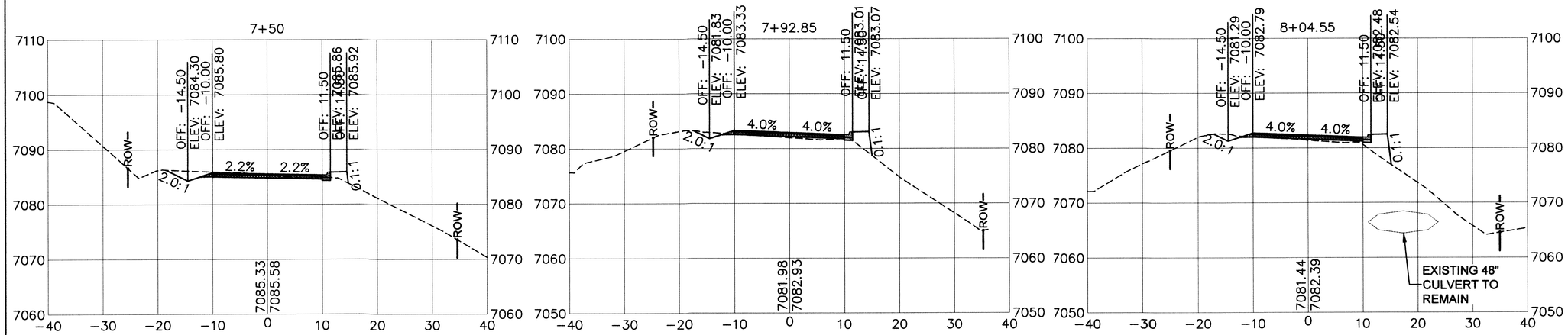

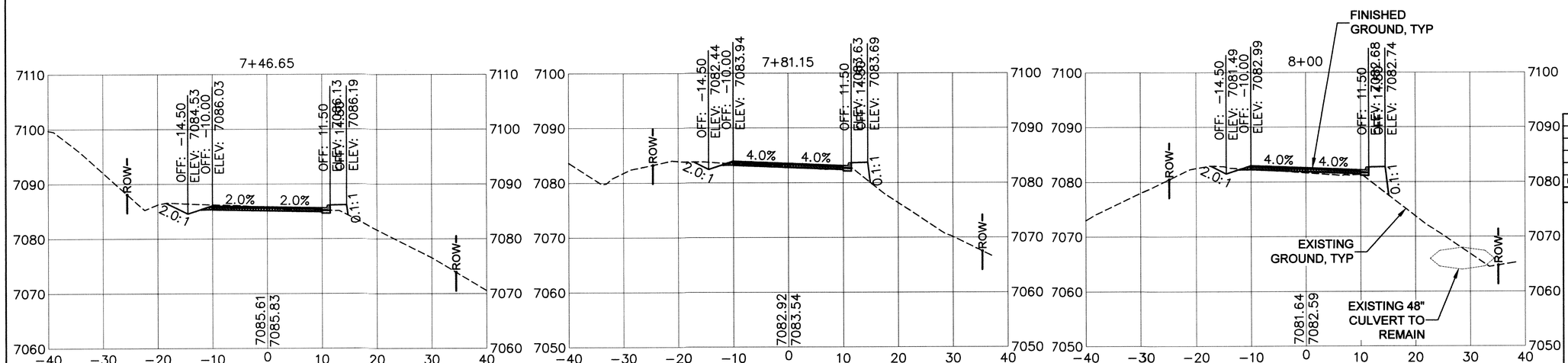

0 5 10 20
SCALE: 1" = 10'

NO.	DESCRIPTION	DATE	BY
5			
4			
3			
2			
1			

REVISIONS (OR CHANGE NOTICES)

Santa Fe County

ROADWAY IMPROVEMENT PLANS
FOR VISTA REDONDA
SUBDIVISION ROADS
PN: 2014-6197-PW/PL
100% DESIGN

ROADWAY CROSS SECTIONS
PASEO ENCANTADO SW (CONT'D)
(BASE BID)

DATE:	SCALE:	SHEET:
MARCH 2015	1" = 10'	9-8

Santa Fe Engineering Consultants, LLC

SANTA FE COUNTY ID# 6197	SHEET NO.
PN: 2014-6197-PW/PL	9-9

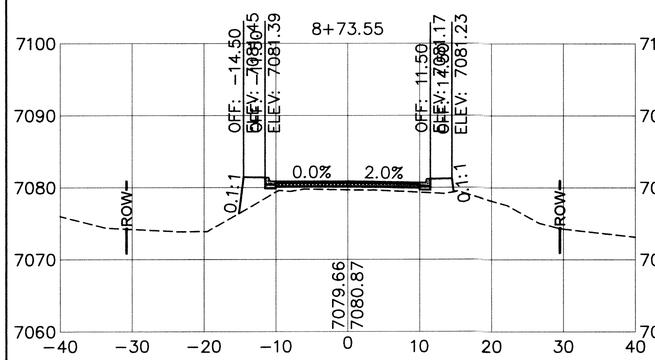

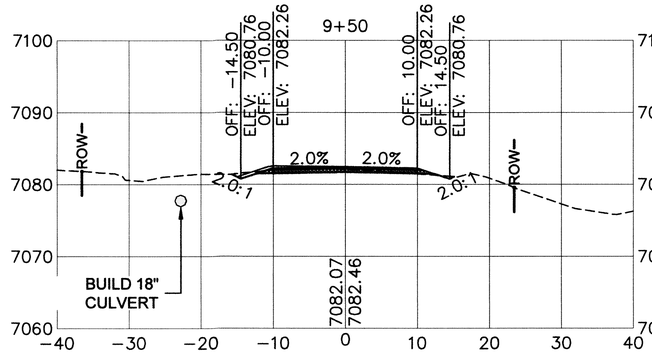

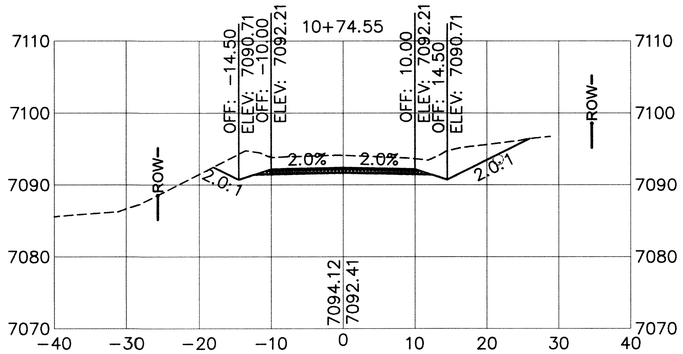

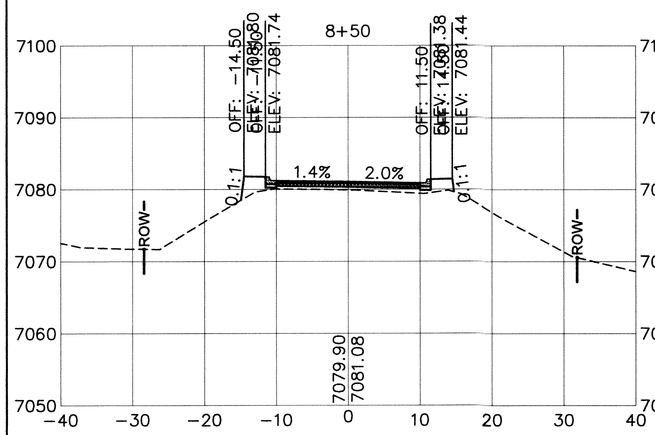

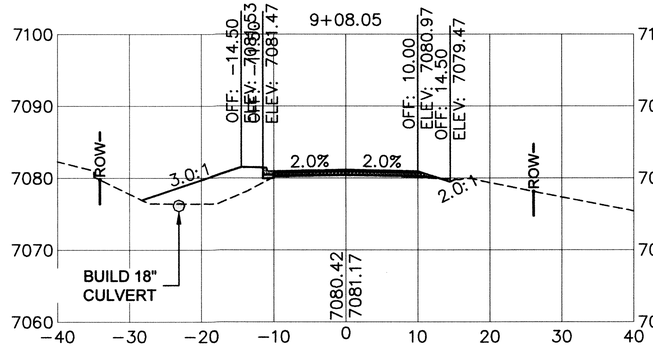

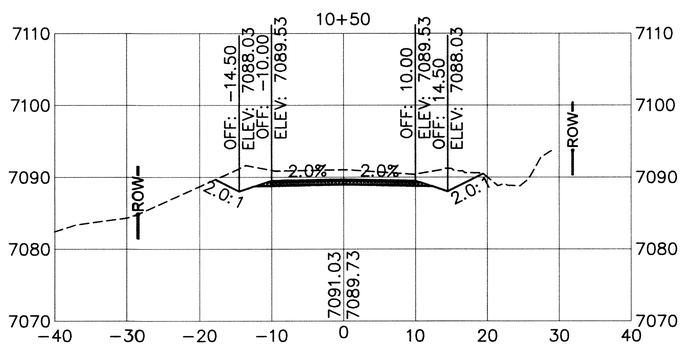

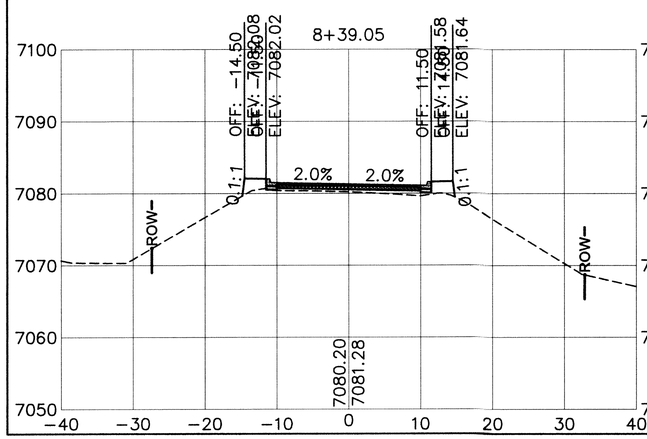

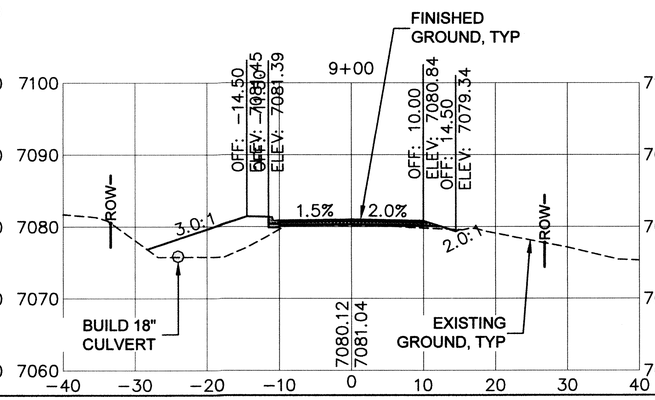

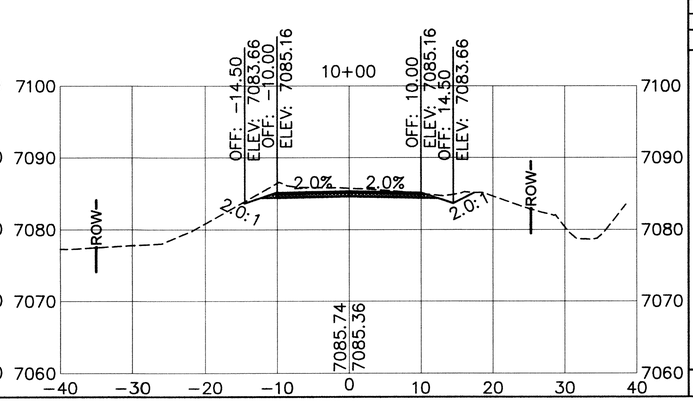

0 5 10 20
SCALE: 1" = 10'

NO.	DESCRIPTION	DATE	BY
5			
4			
3			
2			
1			

REVISIONS (OR CHANGE NOTICES)

Santa Fe County

ROADWAY IMPROVEMENT PLANS
FOR VISTA REDONDA
SUBDIVISION ROADS
PN: 2014-6197-PW/PL
100% DESIGN

ROADWAY CROSS SECTIONS
PASEO ENCANTADO SW (CONT'D)
(BASE BID)

DATE:	SCALE:	SHEET:
MARCH 2015	1" = 10'	9-9

Santa Fe Engineering Consultants, LLC

SANTA FE COUNTY ID# 6197	SHEET NO.
PN: 2014-6197-PW/PL	9-10

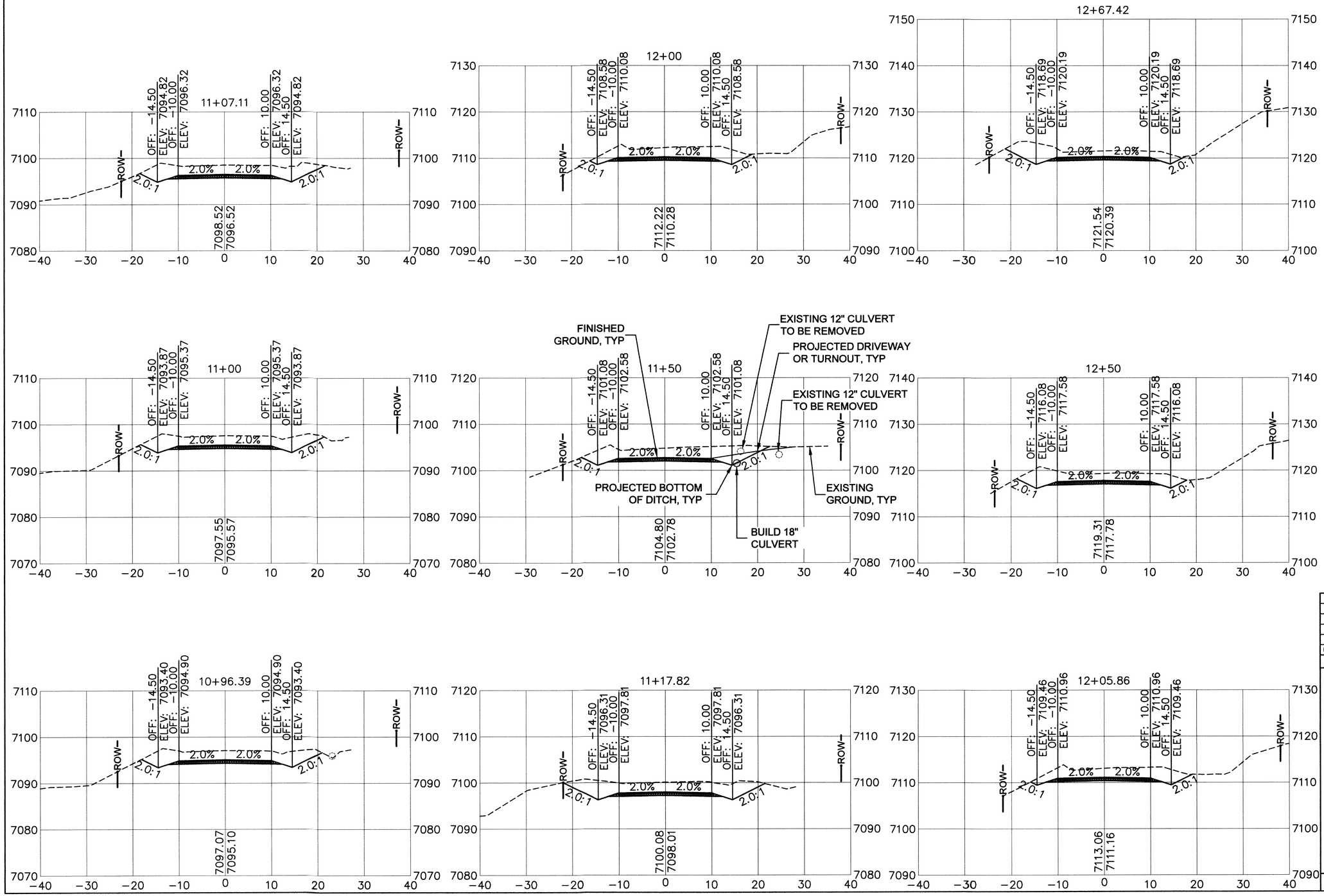

NO.	DESCRIPTION	DATE	BY
5			
4			
3			
2			
1			

REVISIONS (OR CHANGE NOTICES)

Santa Fe County

ROADWAY IMPROVEMENT PLANS
FOR VISTA REDONDA
SUBDIVISION ROADS
PN: 2014-6197-PW/PL
100% DESIGN

ROADWAY CROSS SECTIONS
PASEO ENCANTADO SW (CONT'D)
(BASE BID)

DATE:	SCALE:	SHEET:
MARCH 2015	1" = 10'	9-10

Santa Fe Engineering Consultants, LLC

SANTA FE COUNTY ID# 6197	SHEET NO.
PN: 2014-6197-PW/PL	9-11

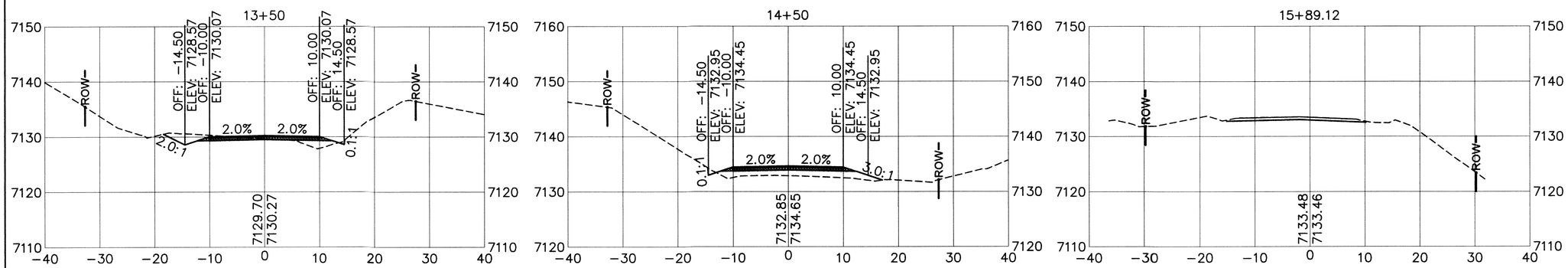

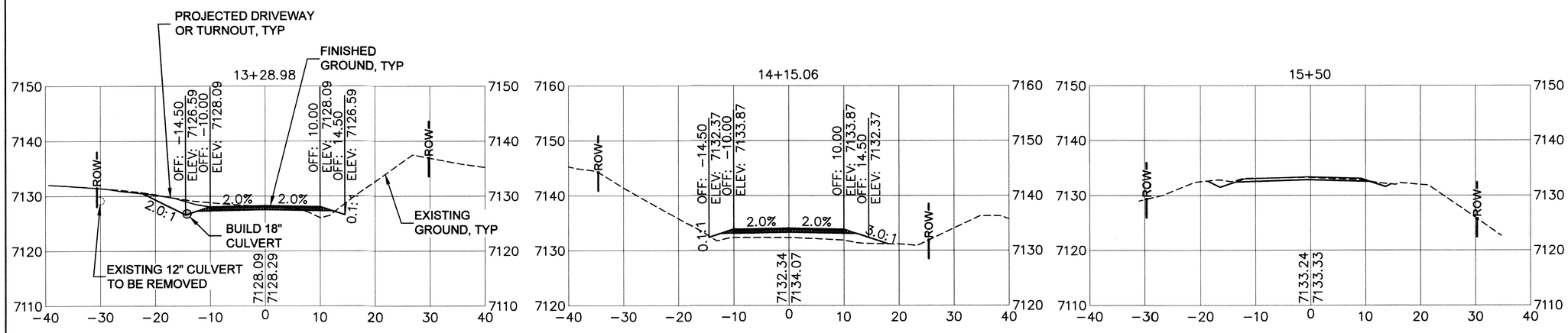

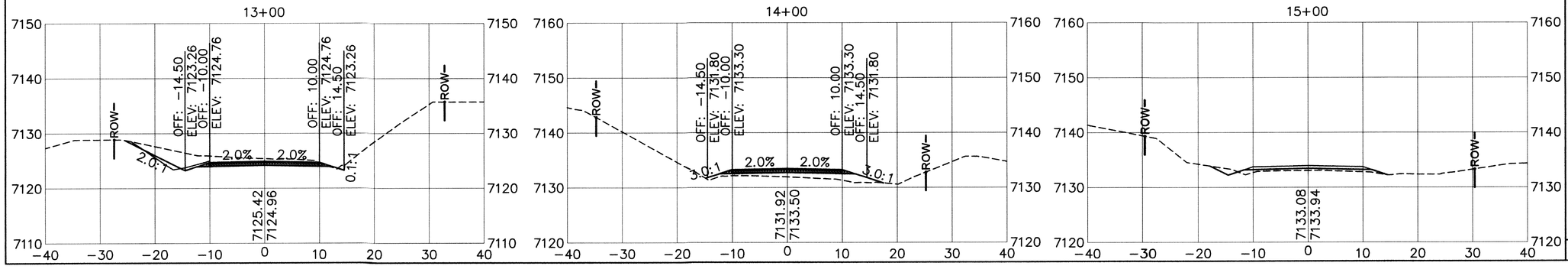

0 5 10 20
SCALE: 1" = 10'

NO.	DESCRIPTION	DATE	BY
5			
4			
3			
2			
1			

REVISIONS (OR CHANGE NOTICES)

Santa Fe County

ROADWAY IMPROVEMENT PLANS
FOR VISTA REDONDA
SUBDIVISION ROADS
PN: 2014-6197-PW/PL
100% DESIGN

ROADWAY CROSS SECTIONS
PASEO ENCANTADO SW (CONT'D)
(BASE BID)

DATE:	SCALE:	SHEET:
MARCH 2015	1" = 10'	9-11

Santa Fe Engineering Consultants, LLC

SANTA FE COUNTY ID# 6197	SHEET NO.
PN: 2014-6197-PW/PL	9-12

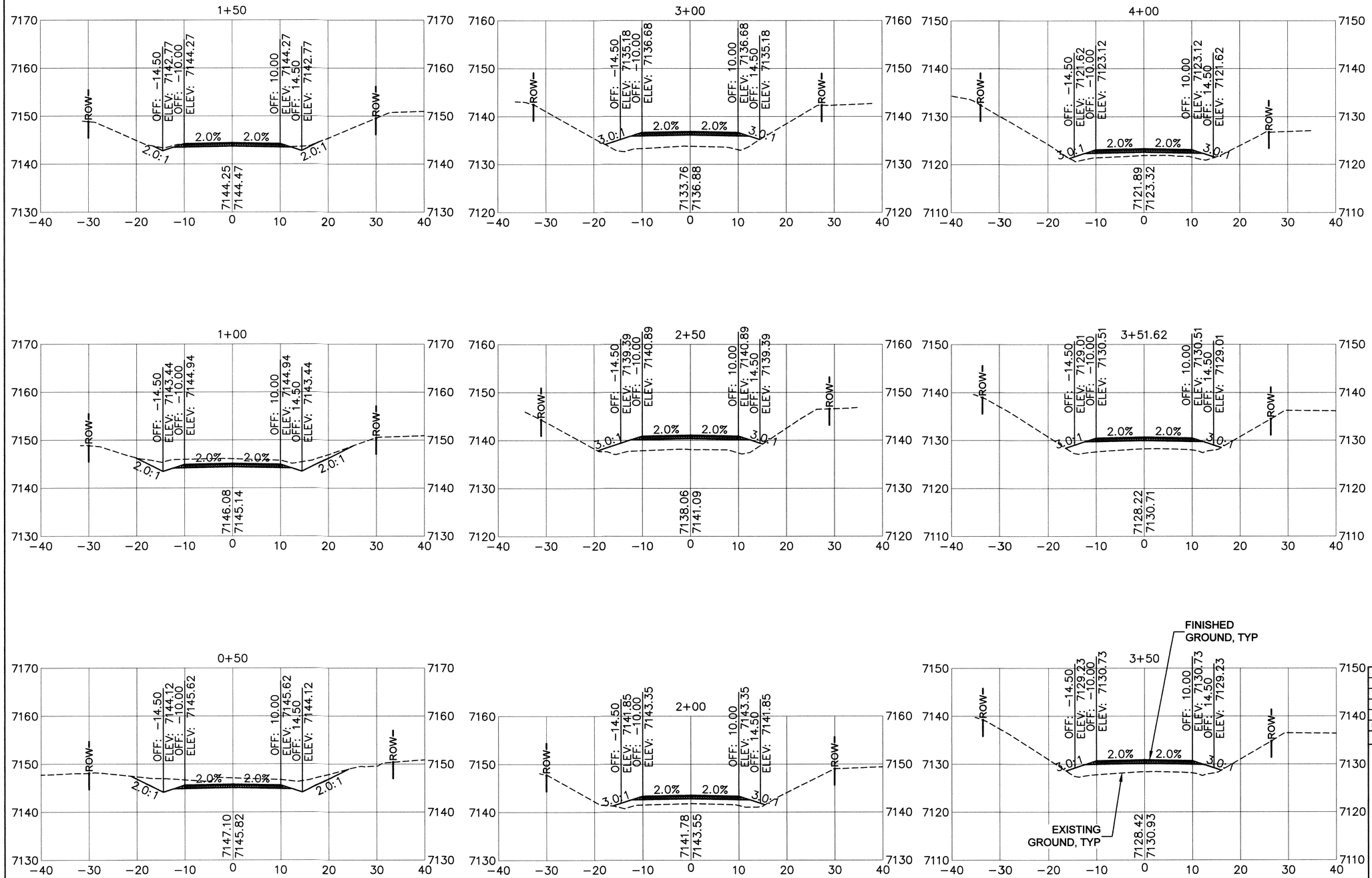

0 5 10 20

SCALE: 1" = 10'

NO.	DESCRIPTION	DATE	BY
5			
4			
3			
2			
1			

REVISIONS (OR CHANGE NOTICES)

Santa Fe County

ROADWAY IMPROVEMENT PLANS
FOR VISTA REDONDA
SUBDIVISION ROADS
PN: 2014-6197-PW/PL
100% DESIGN

ROADWAY CROSS SECTIONS
PASEO ENCANTADO NE
(ADDITIVE ALTERNATE)

DATE:	SCALE:	SHEET:
MARCH 2015	1" = 10'	9-12

Santa Fe Engineering Consultants, LLC

SANTA FE COUNTY ID# 6197	SHEET NO.
PN: 2014-6197-PW/PL	9-13

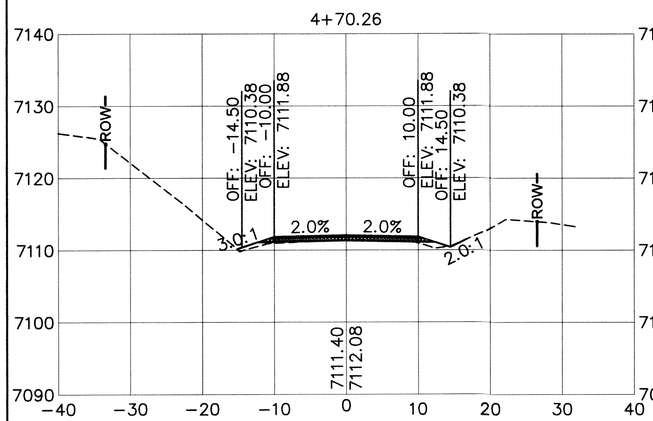

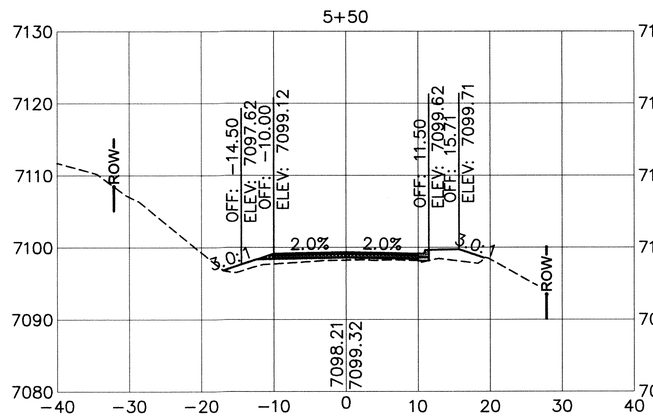

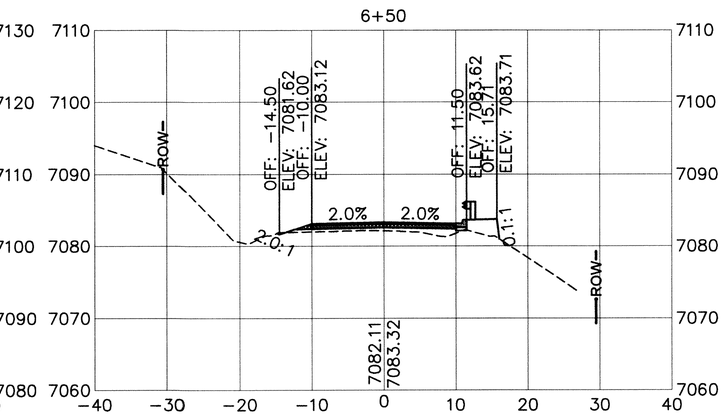

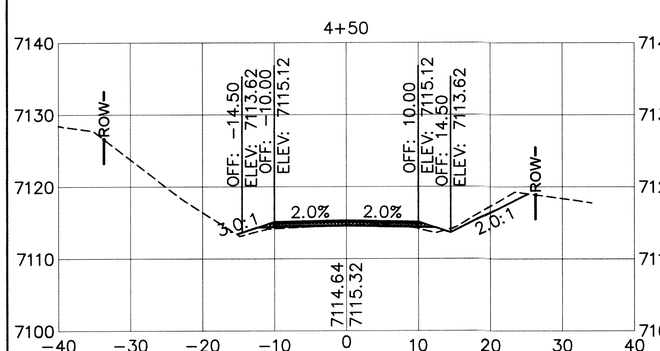

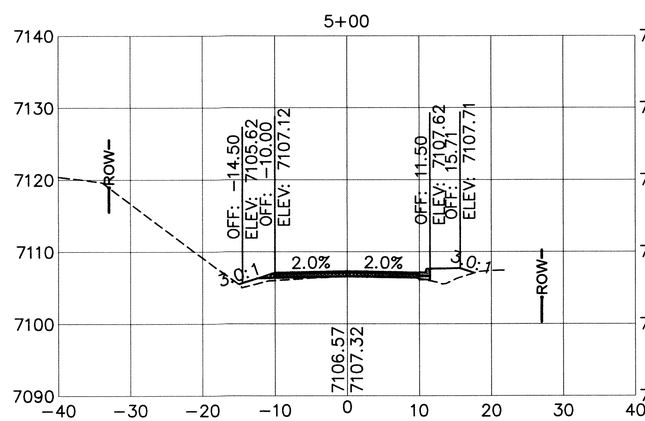

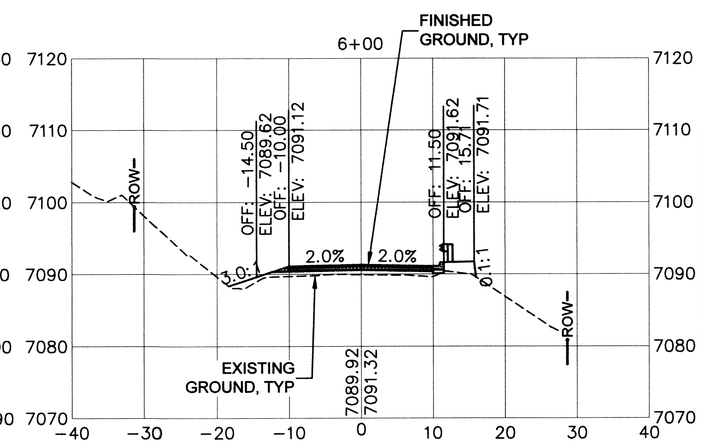

0 5 10 20
SCALE: 1" = 10'

NO.	DESCRIPTION	DATE	BY
5			
4			
3			
2			
1			

REVISIONS (OR CHANGE NOTICES)

Santa Fe County

ROADWAY IMPROVEMENT PLANS
FOR VISTA REDONDA
SUBDIVISION ROADS
PN: 2014-6197-PW/PL
100% DESIGN

ROADWAY CROSS SECTIONS
PASEO ENCANTADO NE (CONT'D)
(ADDITIVE ALTERNATE)

DATE:	SCALE:	SHEET:
MARCH 2015	1" = 10'	9-13

Santa Fe Engineering Consultants, LLC

SANTA FE COUNTY ID# 6197	SHEET NO.
PN: 2014-6197-PW/PL	9-14

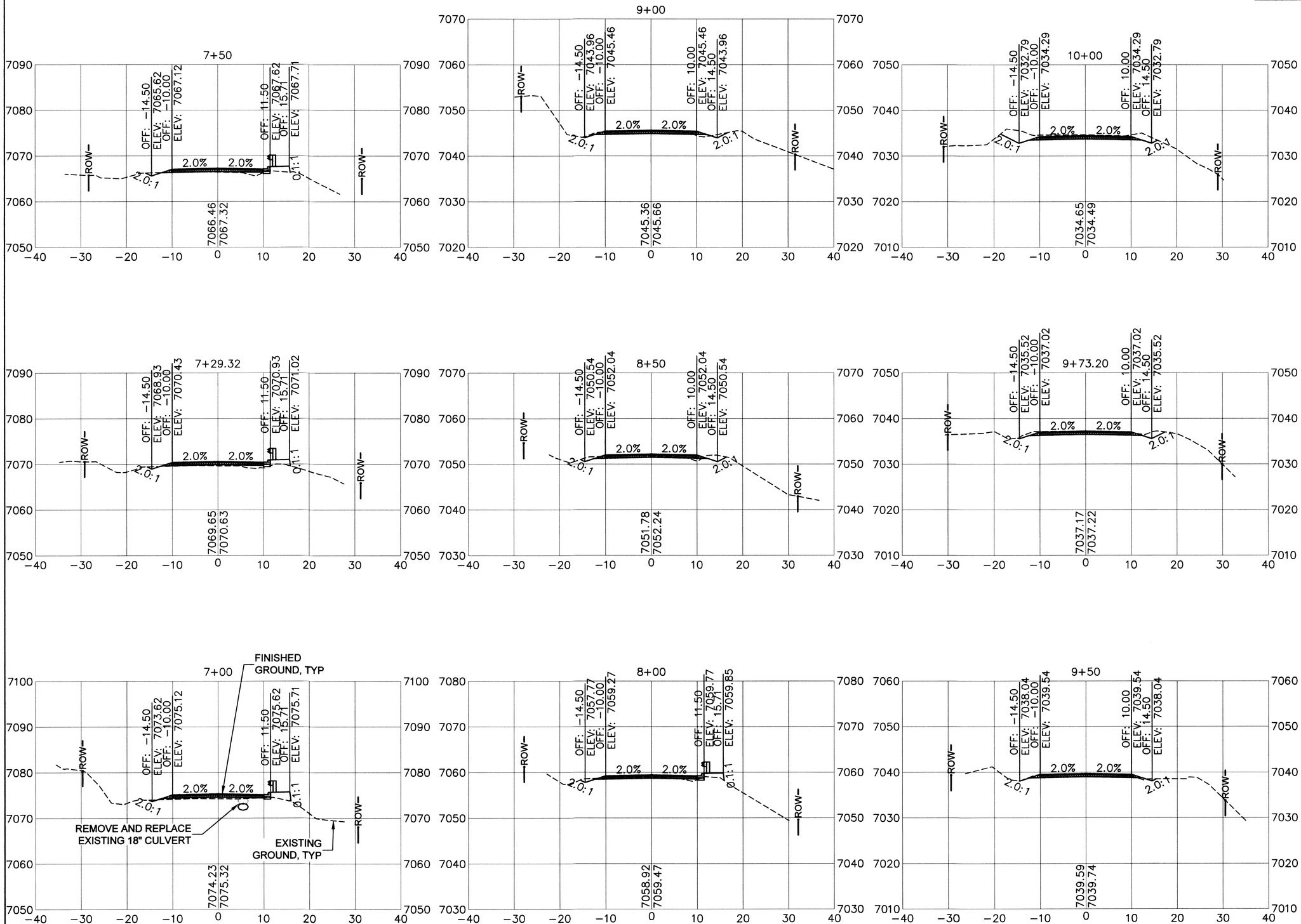

0 5 10 20
SCALE: 1" = 10'

NO.	DESCRIPTION	DATE	BY
5			
4			
3			
2			
1			

REVISIONS (OR CHANGE NOTICES)

Santa Fe County

ROADWAY IMPROVEMENT PLANS
FOR VISTA REDONDA
SUBDIVISION ROADS
PN: 2014-6197-PW/PL
100% DESIGN

ROADWAY CROSS SECTIONS
PASEO ENCANTADO NE (CONT'D)
(ADDITIVE ALTERNATE)

DATE:	SCALE:	SHEET:
MARCH 2015	1" = 10'	9-14

Santa Fe Engineering Consultants, LLC

SANTA FE COUNTY ID# 6197	SHEET NO.
PN: 2014-6197-PW/PL	9-15

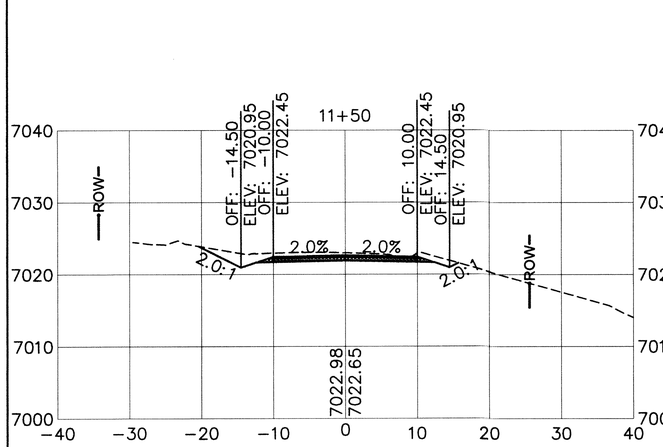

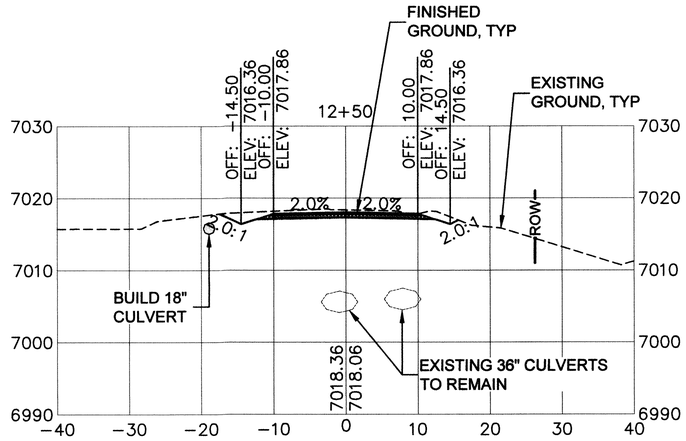

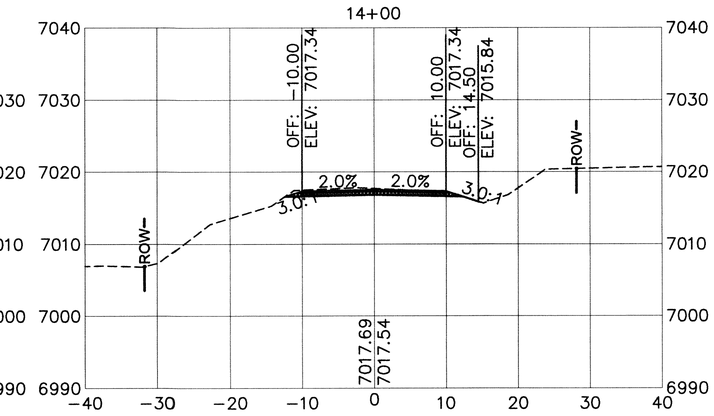

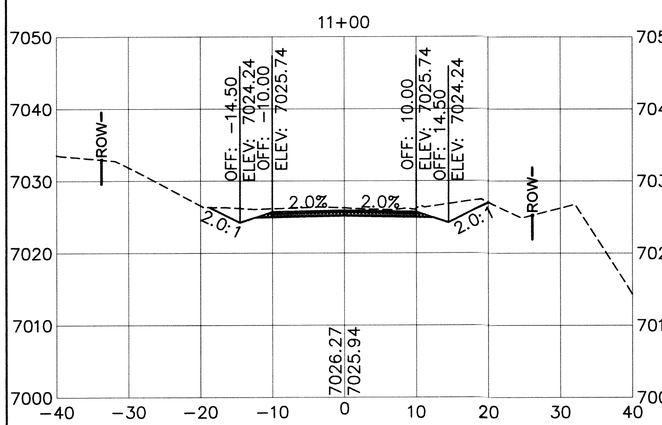

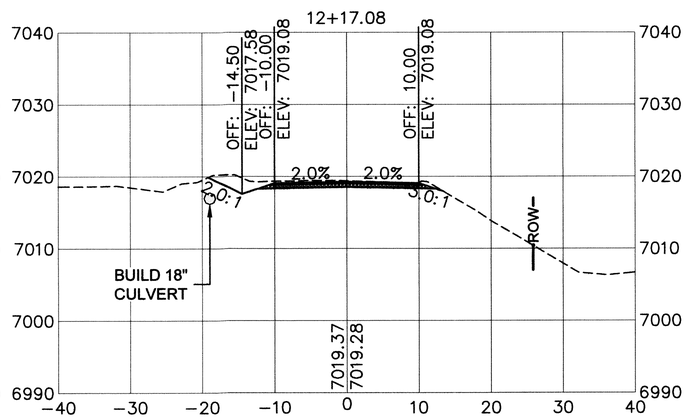

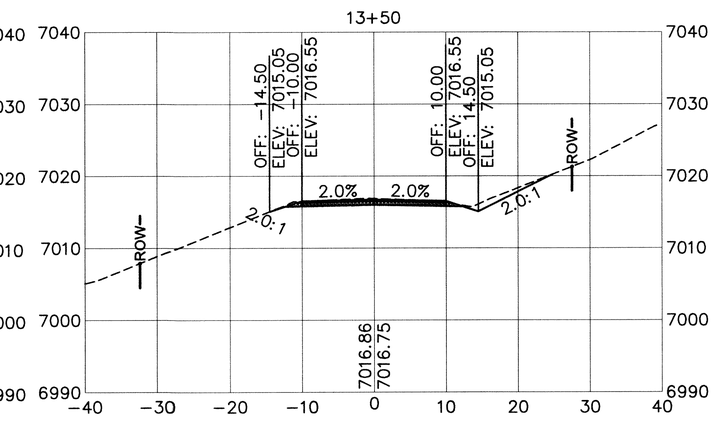

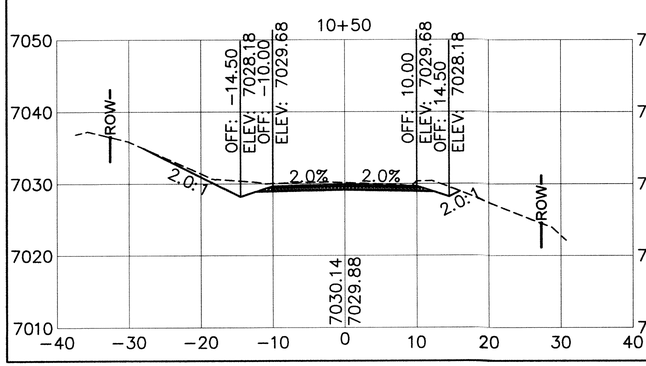

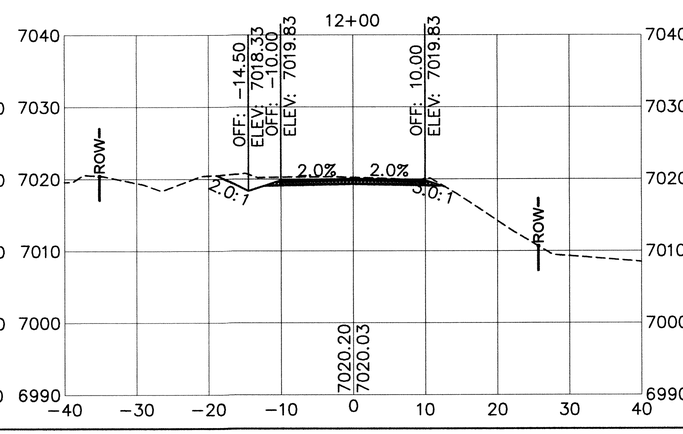

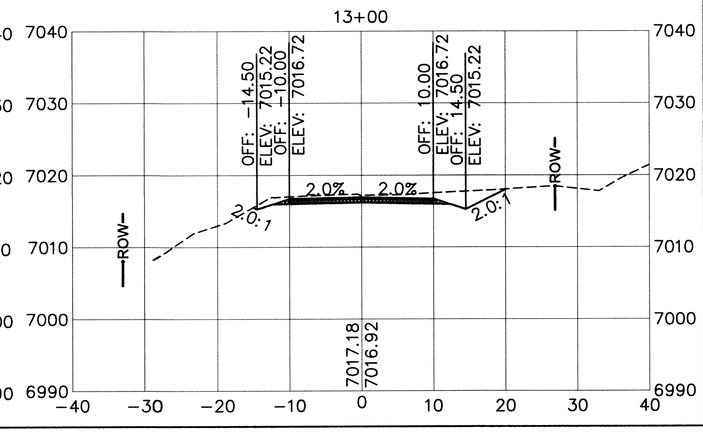

0 5 10 20
SCALE: 1" = 10'

NO.	DESCRIPTION	DATE	BY
5			
4			
3			
2			
1			

REVISIONS (OR CHANGE NOTICES)

Santa Fe County

ROADWAY IMPROVEMENT PLANS
FOR VISTA REDONDA
SUBDIVISION ROADS
PN: 2014-6197-PW/PL
100% DESIGN

ROADWAY CROSS SECTIONS
PASEO ENCANTADO NE (CONT'D)
(ADDITIVE ALTERNATE)

DATE:	SCALE:	SHEET:
MARCH 2015	1" = 10'	9-15

TABLE 1–R

HELICAL CORRUGATED STEEL PIPE–2 2/3" X 1/2" CORRUGATION

DIAMETER OF PIPE (INCHES)	MAX. DEPTH OF COVER ABOVE TOP OF PIPE (FEET)						MIN. CVR (INCHES)
	15	16–20	21–25	26–30	31–35	36–40	
	SPECIFIED WALL THICKNESS (INCH)						
12	0.064	0.064	0.064	0.064	0.064	0.064	12
18	0.064	0.064	0.064	0.064	0.064	0.064	12
24	0.064	0.064	0.064	0.064	0.064	0.064	12
30	0.064	0.064	0.064	0.064	0.064	0.064	12
36	0.064	0.064	0.064	0.064	0.064	0.064	12
42	0.064	0.064	0.064	0.064	0.064	0.064	12
48	0.064	0.064	0.064	0.064	0.064	0.064	12
54	0.079	0.079	0.079	0.079	0.079	0.079	12
60	0.109	0.109	0.109	0.109	0.109	0.109	12
66	0.138	0.138	0.138	0.138	0.138	0.138	12
72	0.138	0.138	0.138	0.138	0.138	0.138	12
78	0.168	0.168	0.168	0.168	0.168	0.168	12
84	0.168	0.168	0.168	0.168	0.168	0.168	12

TABLE 2–R

HELICAL CORRUGATED STEEL PIPE – 3" X 1" CORRUGATION

DIAMETER OF PIPE (INCHES)	MAX. DEPTH OF COVER ABOVE TOP OF PIPE (FEET)						MIN. CVR (INCHES)
	15	16–20	21–25	26–30	31–35	36–40	
	SPECIFIED WALL THICKNESS (INCH)						
54	0.064	0.064	0.064	0.064	0.064	0.064	12
60	0.064	0.064	0.064	0.064	0.064	0.064	12
66	0.064	0.064	0.064	0.064	0.064	0.064	12
72	0.064	0.064	0.064	0.064	0.064	0.079	12
78	0.064	0.064	0.064	0.064	0.064	0.079	12
84	0.064	0.064	0.064	0.064	0.079	0.079	12
90	0.064	0.064	0.064	0.064	0.079	0.109	12
96	0.079	0.079	0.079	0.079	0.079	0.109	12
102	0.079	0.079	0.079	0.079	0.109	0.109	18
108	0.109	0.109	0.109	0.109	0.109	0.109	18
114	0.109	0.109	0.109	0.109	0.109	0.109	18
120	0.109	0.109	0.109	0.109	0.109	0.109	18
126	0.138	0.138	0.138	0.138	0.138	0.138	18
132	0.138	0.138	0.138	0.138	0.138	0.138	18
138	0.138	0.138	0.138	0.138	0.138	0.138	18
144	0.168	0.168	0.168	0.168	0.168	0.168	18

TABLE 3–R

HELICAL CORRUGATED STEEL PIPE – 5" X 1" CORRUGATION

DIAMETER OF PIPE (INCHES)	MAX. DEPTH OF COVER ABOVE TOP OF PIPE (FEET)						MIN. CVR (INCHES)
	15	16–20	21–25	26–30	31–35	36–40	
	SPECIFIED WALL THICKNESS (INCH)						
54	0.064	0.064	0.064	0.064	0.064	0.064	12
60	0.064	0.064	0.064	0.064	0.064	0.064	12
66	0.064	0.064	0.064	0.064	0.064	0.079	12
72	0.064	0.064	0.064	0.064	0.064	0.079	12
78	0.064	0.064	0.064	0.064	0.079	0.079	12
84	0.064	0.064	0.064	0.079	0.079	0.109	12
90	0.064	0.064	0.064	0.079	0.079	0.109	12
96	0.079	0.079	0.079	0.079	0.109	0.109	12
102	0.079	0.079	0.079	0.079	0.109	0.109	18
108	0.109	0.109	0.109	0.109	0.109	0.109	18
114	0.109	0.109	0.109	0.109	0.109	0.138	18
120	0.109	0.109	0.109	0.109	0.109	0.138	18
126	0.138	0.138	0.138	0.138	0.138	0.138	18
132	0.138	0.138	0.138	0.138	0.138	0.138	18
138	0.138	0.138	0.138	0.138	0.138	0.138	18
144	0.168	0.168	0.168	0.168	0.168	0.168	18

NOTES: 1. BACKFILL AROUND PIPE MUST BE COMPACTED TO SPECIFIED AASHTO T–99 DENSITY OF 100%.
2. USE REASONABLE CARE IN HANDLING AND INSTALLATION.

TABLE 4–R

STEEL SPIRAL RIB PIPE – 3/4" X 3/4" X 7 1/2"

DIAMETER OF PIPE (INCHES)	MAX. DEPTH OF COVER ABOVE TOP OF PIPE (FEET)				MIN. CVR (INCHES)
	3/4" X 3/4" X 7 1/2" CORRUGATION				
	0.064	0.079	0.109	0.138	
24	67	95	158		12
30	54	75	126		12
36	45	63	105		12
42	38	54	90		12
48	*33	47	78	114	12
54	29	41	70	101	15
60		37	63	91	15
66		*34	57	83	18
72			52	76	18
78			48	70	21
84			*44	65	21
90				60	24
96				*56	24
102				*50	27

TABLE 5–R

STEEL SPIRAL RIB PIPE – 3/4" X 1" X 11 1/2"

DIAMETER OF PIPE (INCHES)	MAX. DEPTH OF COVER ABOVE TOP OF PIPE (FEET)			MIN. CVR (INCHES)
	3/4" X 1" X 11 1/2" CORRUGATION			
	0.064	0.079	0.109	
24	40	40	40	12
30	39	40	40	12
36	32	40	40	12
42	28	39	40	12
48	24	34	40	12
54	21	30	40	18
60		27	40	18
66		25	40	18
72		*22	38	18
78			35	24
84			33	24
90			*31	24

NOTES: 1. FOR TABLES 4–R AND 5–R, COVER LIMITS INDICATED WITH * ARE FOR TRENCH INSTALLATION ONLY. FOR EMBANKMENT CONDITIONS, USE NEXT HEAVIER GAGE IF AVAILABLE.

2. SEE "INSTALLATION AND BACKFILL OF SPIRAL RIB PIPE" SECTION OF "HANDBOOK OF STEEL DRAINAGE & HIGHWAY CONSTRUCTION PRODUCTS" BY AISI OF 1994 EDITION FOR MORE DETAILS ON INSTALLATION.

GAUGE	THICKNESS (INCHES)
1	0.280
3	0.249
5	0.218
7	0.188
8	0.168
10	0.138
12	0.109
14	0.079
16	0.064
18	0.052

NOTE:
GAUGES SHOWN ARE "US STANDARD GAUGE" FOR UNCOATED STEEL SHEETS AND PLATES. THICKNESS SHOWN IN INCHES INCLUDE GALVANIZED COATING.

R = ROUND PIPE

DESIGN DATA:

SPECIFICATIONS: AASHTO LRFD BRIDGE DESIGN SPECIFICATIONS SECTION 12, 2007 EDITION, WITH 2008 INTERIM REVISIONS.

DEAD LOAD: 120 POUNDS PER CUBIC FOOT EARTH.

LIVE LOAD: HL–93

SAFETY FACTORS: APPROXIMATELY, 3.0 FOR LONGITUDINAL SEAM STRENGTH 2.0, FOR PIPE WALL BUCKLING.

BACKFILL: SOIL STIFFNESS COEFFICIENT (k) = 0.22.

◐ DENOTES THAT THE FURNISHED TABLE IS STILL BASED ON DESIGN SPECIFICATION OF LFD, NOT LRFD YET.

◐ TABLE 6–R

STRUCTURAL PLATE PIPE – 6" X 2" CORRUGATION

DIAMETER OF PIPE (FEET)	MAX. DEPTH OF COVER ABOVE TOP OF PIPE (FEET)						MIN. CVR (INCHES)
	15	16–20	21–25	26–30	31–35	36–40	
	SPECIFIED WALL THICKNESS (INCH)						
5.0	0.111	0.111	0.111	0.111	0.111	0.111	12
5.5	0.111	0.111	0.111	0.111	0.111	0.111	12
6.0	0.111	0.111	0.111	0.111	0.111	0.111	12
6.5	0.111	0.111	0.111	0.111	0.111	0.111	12
7.0	0.111	0.111	0.111	0.111	0.111	0.111	12
7.5	0.111	0.111	0.111	0.111	0.111	0.111	12
8.0	0.111	0.111	0.111	0.111	0.111	0.111	12
8.5	0.111	0.111	0.111	0.111	0.111	0.111	18
9.0	0.111	0.111	0.111	0.111	0.111	0.111	18
9.5	0.111	0.111	0.111	0.111	0.111	0.111	18
10.0	0.111	0.111	0.111	0.111	0.111	0.111	18
10.5	0.111	0.111	0.111	0.111	0.111	0.140	18
11.0	0.111	0.111	0.111	0.111	0.111	0.140	18
11.5	0.111	0.111	0.111	0.111	0.111	0.140	18
12.0	0.111	0.111	0.111	0.111	0.111	0.140	18
12.5	0.111	0.111	0.111	0.111	0.111	0.140	24
13.0	0.111	0.111	0.111	0.111	0.111	0.140	24
13.5	0.111	0.111	0.111	0.111	0.140	0.140	24
14.0	0.111	0.111	0.111	0.111	0.140	0.140	24
14.5	0.111	0.111	0.111	0.111	0.140	0.140	24
15.0	0.111	0.111	0.111	0.140	0.140	0.140	24
15.5	0.111	0.111	0.111	0.140	0.140	0.170	24
16.0	0.111	0.111	0.111	0.140	0.140	0.170	24
16.5	0.140	0.140	0.140	0.140	0.140	0.170	30
17.0	0.140	0.140	0.140	0.140	0.140	0.170	30
17.5	0.140	0.140	0.140	0.140	0.140	0.170	30
18.0	0.140	0.140	0.140	0.140	0.140	0.170	30
18.5	0.170	0.170	0.170	0.170	0.170	0.170	30
19.0	0.170	0.170	0.170	0.170	0.170	0.188	30
19.5	0.170	0.170	0.170	0.170	0.170	0.188	30
20.0	0.170	0.170	0.170	0.170	0.170	0.188	30
20.5	0.188	0.188	0.188	0.188	0.188	0.218	36
21.0	0.188	0.188	0.188	0.188	0.188	0.218	36
21.5	0.218	0.218	0.218	0.218	0.218	0.218	36
22.0	0.218	0.218	0.218	0.218	0.218	0.249	36
22.5	0.218	0.218	0.218	0.218	0.218	0.249	36
23.0	0.218	0.218	0.218	0.218	0.218	0.249	36
23.5	0.249	0.249	0.249	0.249	0.249	0.249	36
24.0	0.249	0.249	0.249	0.249	0.249	0.280	42
24.5	0.249	0.249	0.249	0.249	0.249	0.280	42
25.0	0.280	0.280	0.280	0.280	0.280	0.280	42
25.5	0.280	0.280	0.280	0.280	0.280	0.280	42
26.0	0.280	0.280	0.280	0.280	0.280	0.280	42

NOTES: 1. BACKFILL AROUND PIPE MUST BE COMPACTED TO SPECIFIED AASHTO T–99 DENSITY OF 100%.
2. USE REASONABLE CARE IN HANDLING AND INSTALLATION.

GENERAL NOTES:

1. WHERE ABRASIVE OR CORROSIVE CONDITIONS EXIST, A HEAVIER WALL THICKNESS OR A PROTECTIVE COATING MAY BE REQUIRED. SEE SECTION 570 OF SPECIFICATIONS FOR CORROSION RESISTANCE NUMBER.
2. THE CONTRACTOR MAY FURNISH A HEAVIER WALL THICKNESS THAN THE MINIMUM SHOWN IN THE TABLES AT NO ADDITIONAL COST TO THE DEPARTMENT.
3. ALL PIPES SHALL BE PROTECTED BY A COVER OF AT LEAST 4 FEET BEFORE PERMITTING HEAVY CONSTRUCTION EQUIPMENT TO PASS OVER THEM DURING CONSTRUCTION.
4. MINIMUM COVERS SHOWN IN THE TABLES SHALL BE MEASURED FROM THE TOP OF THE PIPE TO THE BOTTOM OF THE THE FLEXIBLE PAVEMENT OR TO THE TOP OF THE RIGID PAVEMENT. FOR MINIMUM COVERS, A MINIMUM 6" CUSHION OF BACKFILL MATERIAL SHALL BE PROVIDED BETWEEN THE BOTTOM OF THE RIGID PAVEMENT AND THE TOP OF THE PIPE.
5. ALL STEEL CORRUGATED METAL AND AND STRUCTURAL PLATE SHALL CONFORM TO AASHTO SPECIFICATION M–36 AND M–167.
8. ALL PIPES ARE TO BE CAMBERED TO ACCOMMODATE SOIL SETTLEMENT AND CONSOLIDATION. THE AMOUNT OF CAMBER WILL DEPEND ON SOIL CHARACTERISTICS, COVER, LENGTH OF CULVERT, SLOPE, AND OTHER FACTORS AND SHALL BE APPROVED BY THE PROJECT MANAGER.
9. SEE 206–07–1/1 – CORRUGATED METAL CULVERT AND PIPE ARCHES BEDDING AND BACKFILL DETAILS FOR INSTALLATION.
10. SEE SECTION 570 PIPE CULVERT SPECIFICATIONS AND SECTION 571 STRUCTURAL PLATE STRUCTURES SPECIFICATIONS.
6. FOR PIPE SIZES NOT SHOWN, THE GAUGE WILL BE THAT REQUIRED BY THE MINIMUM AND MAXIMUM COVERS FOR THE NEXT LARGER TABULATED PIPE SIZE.
7. COVER HEIGHTS OVER 40 FEET SHALL BE USED ONLY AFTER A THOROUGH INVESTIGATION OF THE FOUNDATION MATERIALS.

TIMOTHY A. MARRS
NEW MEXICO
14072
REGISTERED PROFESSIONAL ENGINEER
4-10-12

SHEET 10-1

	DATE	BY	DESCRIPTION

REVISIONS (OR CHANGE NOTICES)

NEW MEXICO DEPARTMENT OF TRANSPORTATION STANDARD DRAWING

MAXIMUM AND MINIMUM COVER
STEEL–ROUND PIPES
HELICAL CORRUGATED METAL
AND
STRUCTURAL PLATES

DESIGNED BY: DRAWN BY: SKL. CHECKED BY: YML/TM

206–03–1/1 1 of 1

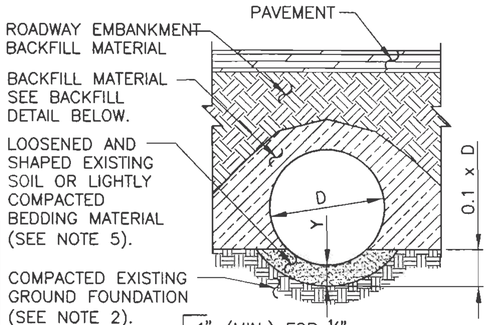

Y = 1" (MIN.) FOR ½" DEPTH CORRUGATIONS, 2" (MIN.) FOR 1" DEPTH CORRUGATIONS. 3" (MIN.) FOR 2' OR 2½" DEPTH CORRUGATIONS.

SUITABLE EXISTING GROUND FOUNDATION

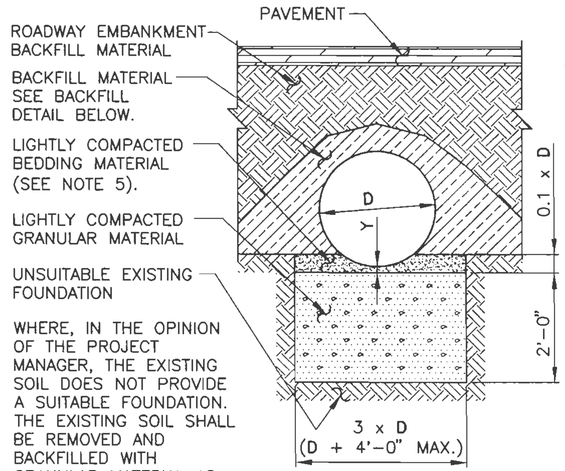

WHERE, IN THE OPINION OF THE PROJECT MANAGER, THE EXISTING SOIL DOES NOT PROVIDE A SUITABLE FOUNDATION. THE EXISTING SOIL SHALL BE REMOVED AND BACKFILLED WITH GRANULAR MATERIAL AS APPROVED BY THE PROJECT MANAGER.

UNSUITABLE EXISTING FOUNDATION

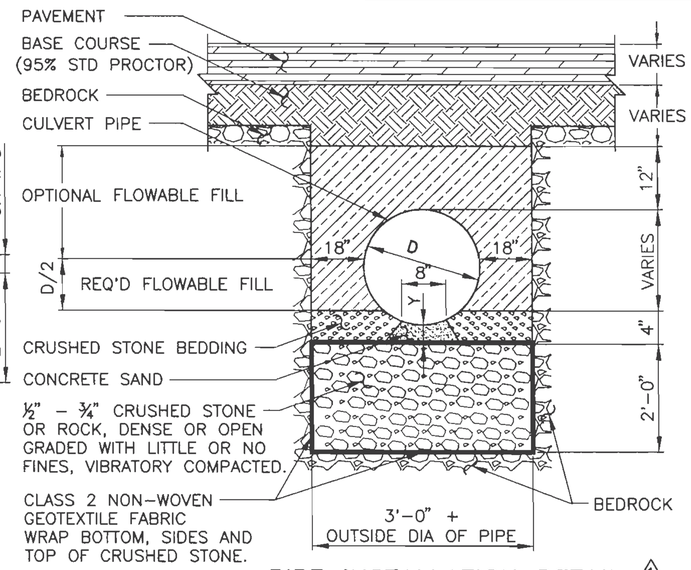

PIPE INSTALLATION DETAIL ⚠1 (FOR BEDROCK EXCAVATION ONLY)

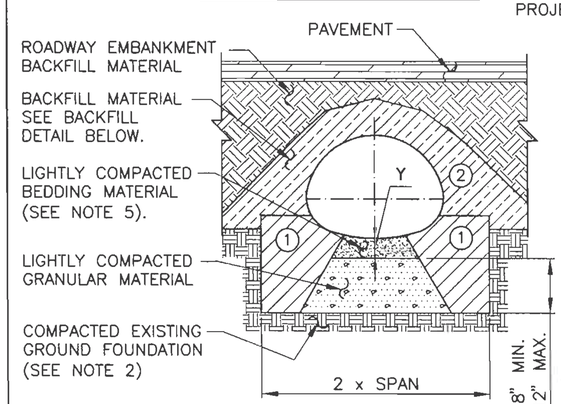

SUITABLE EXISTING GROUND FOUNDATION

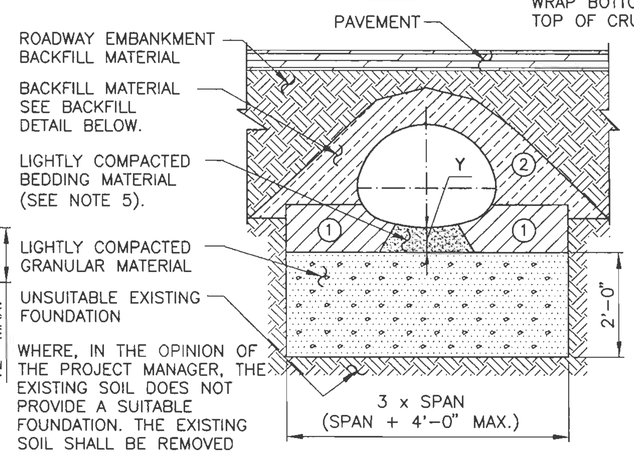

WHERE, IN THE OPINION OF THE PROJECT MANAGER, THE EXISTING SOIL DOES NOT PROVIDE A SUITABLE FOUNDATION. THE EXISTING SOIL SHALL BE REMOVED AND BACKFILLED WITH GRANULAR MATERIAL AS APPROVED BY THE PROJECT MANAGER.

UNSUITABLE EXISTING FOUNDATION

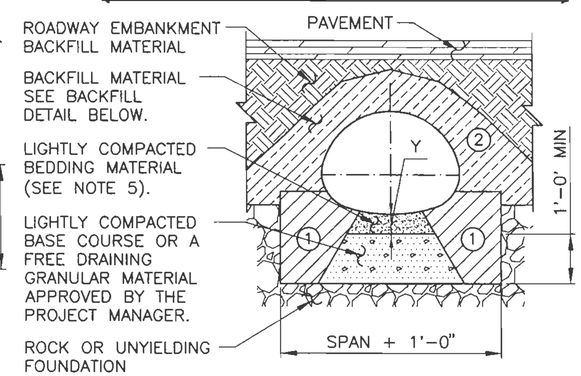

ROCK OR UNYIELDING FOUNDATION

GENERAL NOTES:

1. RIVETED OR WELDED METAL PIPE AND ARCHES SHALL BE PLACED WITH THE INSIDE CIRCUMFERENTIAL LAPS POINTING DOWNSTREAM AND WITH LONGITUDINAL LAPS AT THE SIDE ON QUARTER POINTS, NOT TOP OR BOTTOM. STRUCTURAL PLATE AND PIPE ARCH CULVERTS SHALL BE ERECTED AS SHOWN ON THE ERECTION DIAGRAMS FURNISHED BY THE SUPPLIER.
2. THE EXISTING GROUND FOUNDATION MATERIAL UNDER PIPES SHALL BE BROKEN UP AND COMPACTED TO A MINIMUM DEPTH OF 6". COMPACTION SHALL BE 95% OF MAXIMUM DENSITY BY AASHTO SPECIFICATION T-99.
3. WHERE AN UNSUITABLE MATERIAL (PEAT, MUCK, ETC.) IS ENCOUNTERED AT OR BELOW THE INVERT ELEVATION. THE NECESSARY SUBSURFACE EXPLORATION AND ANALYSIS SHALL BE MADE AND CORRECTIVE TREATMENT SHALL BE AS DIRECTED BY THE PROJECT MANAGER.
4. IMPERVIOUS MATERIAL SHALL BE PLACED LONGITUDINALLY ALONG THE PIPE TO THE ELEVATIONS AND LIMITS SHOWN ON THE "CROSS SECTION OF ROADWAY EMBANKMENT," AND TRANSVERSELY AROUND THE PIPE TO THE DENSITY AND SLOPES SHOWN FOR BACKFILL MATERIAL ON THE "BACKFILL DETAIL." UNLESS OTHERWISE DESIGNATED ON THE PLANS OR DIRECTED BY THE PROJECT MANAGER IMPERVIOUS MATERIAL SHALL CONFORM TO AASHTO SPECIFICATION A-6 OR A-7 SOILS.
5. BEDDING MATERIAL SHALL BE ROUGHLY SHAPED TO FIT BOTTOM OF PIPES AND THEN LIGHTLY COMPACTED. MATERIAL SHALL CONFORM TO SECTION 206 OF THE NEW MEXICO DEPARTMENT OF TRANSPORTATION STANDARD SPECIFICATIONS. FOR PIPE ARCH, THE WIDTH OF THE BEDDING SHALL NOT EXCEED THE WIDTH OF THE BOTTOM ARC.
6. WHERE MULTIPLE LINES OF PIPE OR PIPE ARCHES GREATER THAN 4'-0" IN DIAMETER OR SPAN ARE USED, THEY SHALL BE SPACED SO THAT ADJACENT SIDES OF THE PIPE SHALL BE AT LEAST ONE-HALF DIAMETER OR 3'-0" APART, WHICHEVER IS LESS, TO PERMIT ADEQUATE COMPACTION OF BACKFILL MATERIAL. FOR DIAMETERS 4'-0" AND LESS, THE MINIMUM SPACING SHALL BE NOT LESS THAN 2'-0". SEE 570-02-1/2 OR 570-02-2/2 FOR FLARED END SECTIONS.
7. A CONTINUOUS CONCRETE CRADLE SHALL BE USED ONLY WHEN CALLED FOR ON THE PLANS.
8. BACKFILL MATERIAL SHALL CONFORM TO SECTION 206 OF THE NEW MEXICO DEPARTMENT OF TRANSPORTATION STANDARD SPECIFICATIONS. SPECIAL CARE SHALL BE TAKEN WHEN COMPACTING BACKFILL AT THE HUNCHES AND SIDES OF PIPES.
9. REFER TO 206-03-1/1 THRU 206-06-1/1 FOR TABLE OF MINIMUM AND MAXIMUM COVER AND CORRESPONDING GAUGE.

KEY	SYMBOL	DESCRIPTION
1		100% COMPACTION
2		90% COMPACTION

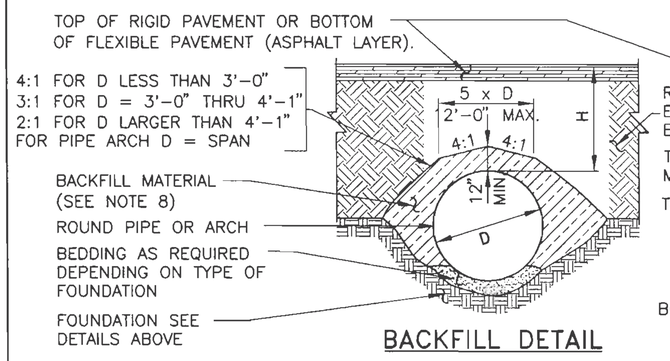

BACKFILL DETAIL

BACKFILL DETAIL SHOWN ABOVE SHALL NOT BE CONSTRUED AS RELIEVING THE CONTRACTOR OF HIS OBLIGATIONS REGARDING DAMAGE TO THE CULVERT PIPE. H = MINIMUM OR MAXIMUM COVER.

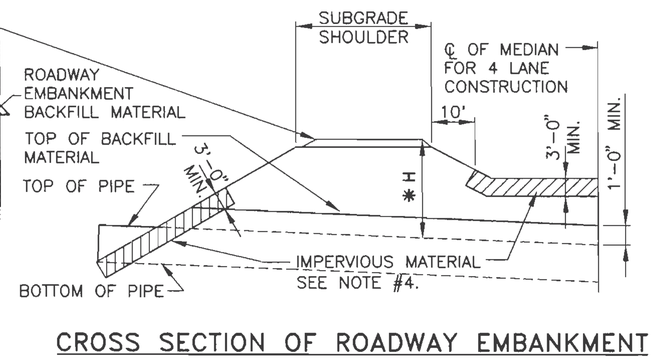

CROSS SECTION OF ROADWAY EMBANKMENT

* LOCATION OF MAXIMUM OR MINIMUM COVER DEPENDS ON PIPE SLOPE AND ROADWAY X-SECTION.

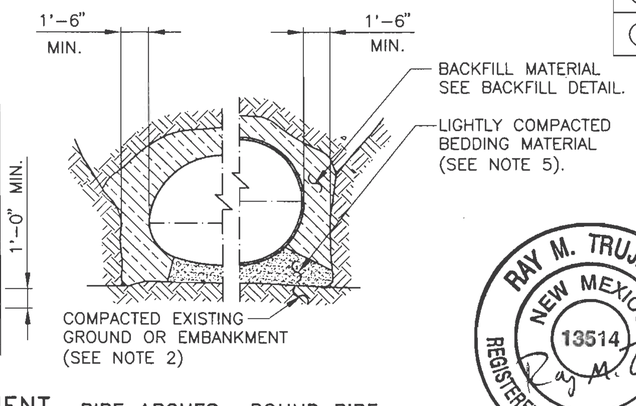

PIPE ARCHES ROUND PIPE

TRENCH CONDITION

RAY M. TRUJILLO NEW MEXICO 13514 REGISTERED PROFESSIONAL ENGINEER

8/29/08

SHEET 10-2

NO.	DATE	REV.BY	DESCRIPTION
1	2/14/07	YML	REVISIONS TO DEDROCK DETAIL

REVISIONS (OR CHANGE NOTICES)

NEW MEXICO DEPARTMENT OF TRANSPORTATION STANDARD DRAWING

CORRUGATED METAL CULVERT AND PIPE ARCHES BEDDING AND BACKFILL DETAILS

DESIGNED BY ____ DRAWN BY SKL CHECKED BY TM/YML

206-07-1/1

1 OF 1

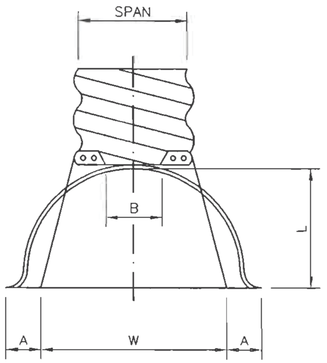

PLAN

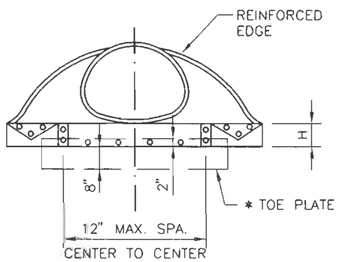

ELEVATION

NOTE: SIZES EQUIVALENT TO THE ABOVE, USING 3" x 1" CORRUGATIONS, MAY BE USED PROVIDING THAT THEY MEET THE SIZES SHOWN UNDER TABLE 6 OF SERIAL 206-04-1/3 THRU 206-04-3/3.

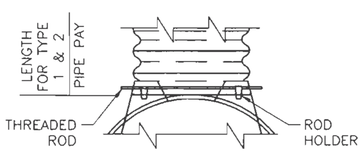

TYPE 2

FOR 17" x 13" THRU 57" x 38"

PIPE ARCH DIMENSIONS		GALVANIZED THICKNESS GA.	DIMENSIONS					APPROX. SLOPE	BODY
SPAN (IN.)	RISE (IN.)		A (IN.) (± 1")	B (IN.) (MAX.)	H (IN.) (± 1")	L (IN.) (± 1½")	W (IN.) (± 2")		
17	13	16	7	9	6	19	30	2 1/2:1	1 PC.
21	15	16	7	10	6	23	36	2 1/2:1	1 PC.
24	18	16	8	12	6	28	42	2 1/2:1	1 PC.
28	20	16	9	14	6	32	48	2 1/2:1	1 PC.
35	24	14	10	16	6	39	60	2 1/2:1	1 PC.
42	29	14	12	18	6	46	75	2 1/2:1	1 PC.
49	33	12	13	21	9	53	85	2 1/2:1	2 PC.
57	38	12	18	26	12	63	90	2 1/2:1	2 PC.
64	43	12	18	30	12	70	102	2 1/4:1	2 PC.
71	47	12	18	33	12	77	114	2 1/4:1	3 PC.
77	52	12	18	36	12	77	126	2:1	3 PC.
83	57	12	18	39	12	77	138	2:1	3 PC.

* THE CONTRACTOR SHALL VERIFY WITH PROVIDERS FOR CURRENT INDUSTRY SIZES.

NOTE:

1. ALL 3 PIECE BODIES TO HAVE 12 GAUGE THICK SIDES AND 10 GAUGE THICK CENTER PANELS. WIDTH OF CENTER PANELS TO BE GREATER THAN 20% OF THE PIPE PERIPHERY. MULTIPLE PANEL BODIES TO HAVE LAP SEAMS WHICH ARE TO BE TIGHTLY JOINED BY 3/8" GALVANIZED RIVETS OR BOLTS.
2. △1 FOR 77" X 52" AND 83" X 57" SIZES, REINFORCED EDGED TO BE SUPPLEMENTED BY L 2" X 2" X 1/4" GALVANIZED ANGLES. THE ANGLES TO BE ATTACHED BY 3/8" GALVANIZED NUTS AND BOLTS.
3. ANGLE REINFORCEMENT WILL BE PLACED UNDER THE CENTER PANEL SEAMS ON THE 77" X 52" AND 83" X 57" SIZES.
* 4. TOE PLATE TO BE CONSTRUCTED WHERE SHOWN ON PLANS.

STANDARD CONNECTION
STANDARD END SECTIONS FOR PIPE-ARCH STEEL PIPE

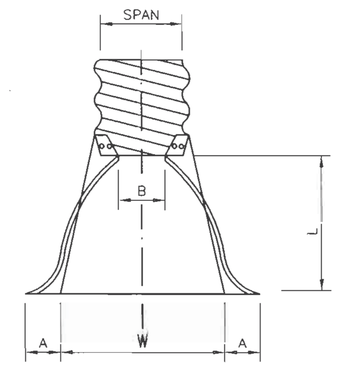

PLAN

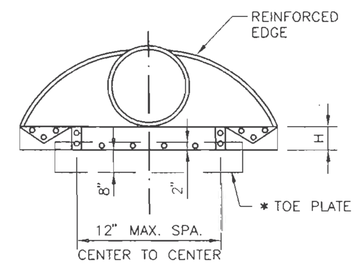

ELEVATION

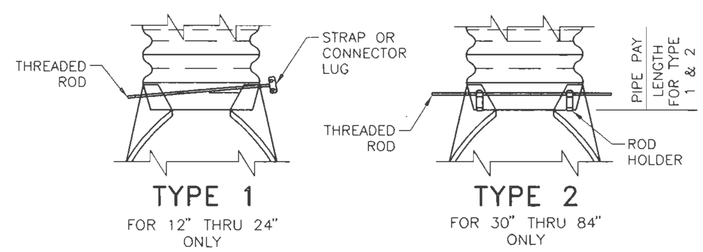

TYPE 1

FOR 12" THRU 24" ONLY

TYPE 2

FOR 30" THRU 84" ONLY

ROUND PIPE DIMENSIONS	GALVANIZED THICKNESS GAUGE.	DIMENSIONS					APPROX. SLOPE	BODY
PIPE DIA. (IN.)		A (IN.) (± 1")	B (IN.) (MAX.)	H (IN.) (± 1")	L (IN.) (± 1⅛")	W (IN.) (± 2")		
12	16	6	6	6	21	24	2 1/2:1	1 PC.
15	16	7	8	6	26	30	2 1/2:1	1 PC.
18	16	8	10	6	31	36	2 1/2:1	1 PC.
21	16	9	12	6	36	42	2 1/2:1	1 PC.
24	16	10	13	6	41	48	2 1/2:1	1 PC.
30	14	12	16	8	51	60	2 1/2:1	1 PC.
36	14	14	19	9	60	72	2 1/2:1	2 PC.
42	12	16	22	11	69	84	2 1/2:1	2 PC.
48	12	18	27	12	78	90	2 1/4:1	2 PC.
54	12	18	30	12	84	102	2:1	2 PC.
60	12	18	33	12	87	114	1 3/4:1	3 PC.
66	12	18	36	12	87	120	1 1/2:1	3 PC.
72	12	18	39	12	87	126	1 1/3:1	3 PC.
78	12	18	42	12	87	132	1 1/4:1	3 PC.
84	12	18	45	12	87	138	1 1/16:1	3 PC.

* THE CONTRACTOR SHALL VERIFY WITH PROVIDERS FOR CURRENT INDUSTRY SIZES.

NOTE:

1. ALL 3 PIECE BODIES TO HAVE 12 GAUGE THICK SIDES AND 10 GAUGE CENTER PANELS. WIDTH OF CENTER PANELS TO BE GREATER THAN 20% OF THE PIPE PERIPHERY. MULTIPLE PANEL BODIES TO HAVE LAP SEAMS WHICH ARE TO BE TIGHTLY JOINED BY 3/8" ø GALVANIZED RIVETS OR BOLTS. △3
2. FOR 60" THRU 84" SIZES, REINFORCED EDGES TO BE SUPPLEMENTED WITH GALVANIZED STIFFENER ANGLES. THE ANGLES WILL BE L 2" X 2" X 1/4" FOR 60" THRU 78" DIAMETER AND L 2 1/2" X 2 1/2" X 1/4" FOR 78" AND 84" DIAMETER. THE ANGLES TO BE ATTACHED BY 3/8" GALVANIZED NUTS AND BOLTS.
* 3. TOE PLATE TO BE CONSTRUCTED WHERE SHOWN ON PLANS.

STANDARD CONNECTIONS
STANDARD END SECTIONS FOR ROUND STEEL PIPE

GENERAL NOTES

1. FOR MULTIPLE INSTALLATION OF ALL TYPES, A MIN. OF A 2'-0" SPACING MEASURED ALONG THE HORIZONTAL BETWEEN FLARED END SECTIONS AT THEIR WIDEST CROSS SECTION SHALL BE USED.
2. WELDING WILL NOT BE PERMITTED IN CONNECTING END SECTIONS TO CONNECTOR SECTIONS OR CONNECTOR SECTIONS TO PIPE.
3. TYPE 1 AND TYPE 2 MAY BE USED WITH WELDED SEAM OR LOCKSEAM CONNECTIONS HELICALLY CORRUGATED PIPE WITH REROLLED ENDS. REROLLED ENDS SHALL INCLUDE A MINIMUM OF TWO ANNULAR CORRUGATIONS OF THE SAME SIZE AS THE PIPE CORRUGATIONS.

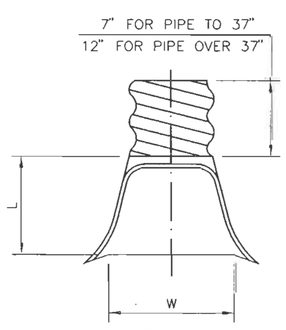

PLAN

PIPE DIAM. (IN.)	APRONS	
	L (IN.)	W (IN.)
18	19	30
21	23	36
24	28	42
30	31.5	48
36	38.5	60
42	47	75
48	54	85
60	63	96
66	70	112
72	77	128

CORRUGATED ALUMINUM PIPE END SECTION

NO.	DATE	REV.BY	DESCRIPTION
△3	2/10/09	YML	CORRECTED 0.6 GA. TO 3/8" ø
△2	2/10/09	YML	MADE GENERAL REVISIONS
△1	2/10/09	YML	CORRECTED 83" x 35" TO 83" x 57"

REVISIONS (OR CHANGE NOTICES)

NEW MEXICO
DEPARTMENT OF TRANSPORTATION
STANDARD DRAWING

CULVERT PIPE
END SECTIONS
(METAL)

DESIGNED BY_____ DRAWN BY SKL CHECKED BYTM/YML

SHEET 10-3

570-02-1/2

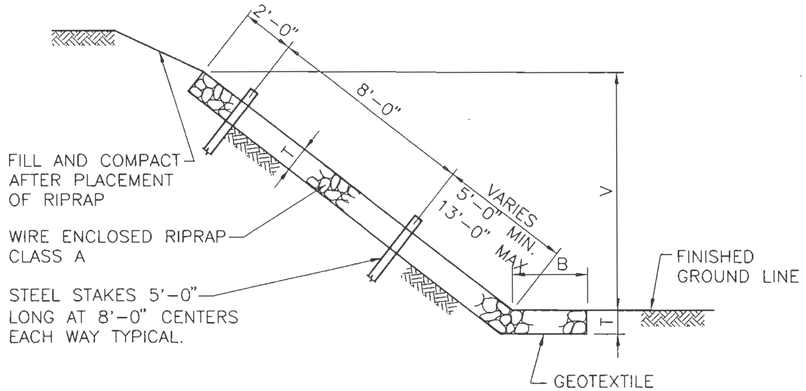

SECTION TYPE I

QUANTITIES PER LINEAR FOOT	
SLOPE	RIPRAP (CU. YDS.)
1.5 : 1	$\frac{T}{27}(B + 1.803\ V + 0.303\ T)$
1.75 : 1	$\frac{T}{27}(B + 2.016\ V + 0.266\ T)$
2 : 1	$\frac{T}{27}(B + 2.236\ V + 0.236\ T)$
3 : 1	$\frac{T}{27}(B + 3.162\ V + 0.162\ T)$
4 : 1	$\frac{T}{27}(B + 4.123\ V + 0.123\ T)$

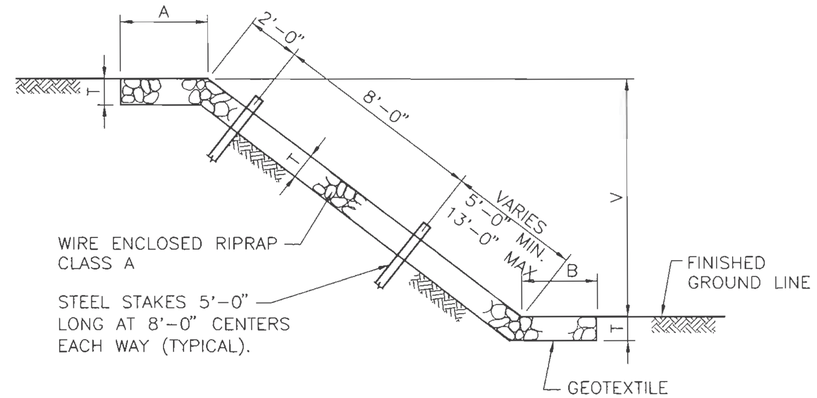

SECTION TYPE II

QUANTITIES PER LINEAR FOOT	
SLOPE	RIPRAP (CU. YDS.)
1 : 1	$\frac{T}{27}(A + B + 1.414V)$
1.5 : 1	$\frac{T}{27}(A + B + 1.803V)$
1.75 : 1	$\frac{T}{27}(A + B + 2.016V)$
2 : 1	$\frac{T}{27}(A + B + 2.236V)$
3 : 1	$\frac{T}{27}(A + B + 3.162V)$
4 : 1	$\frac{T}{27}(A + B + 4.123V)$

GENERAL NOTES

1. WIRE FABRIC FOR RIP RAP SHALL BE "W" OR HEXAGONAL MESH AND MEET THE REQUIREMENTS LISTED IN SECTION 602 OF THE NMDOT STANDARD SPECIFICATIONS FOR HIGHWAY AND BRIDGE CONSTRUCTON, CURRENT EDITION.
2. STEEL STAKES MAY BE RAILROAD RAILS WEIGHING NOT LESS THAN 30 LBS. PER YARD, 4" NOMINAL DIAMETER STANDARD STRENGTH GALVANIZED STEEL PIPE, OR L 4" x 4"x 3/8" STEEL ANGLES. STEEL STAKES SHALL PROJECT 6" ABOVE TOP OF RIPRAP. STEEL STAKES ARE CONSIDERED INCIDENTAL TO THE COMPLETION OF THE WORK AND NO DIRECT MEASUREMENT OR PAYMENT WILL BE MADE THEREFORE.
3. IF LENGTH OF SLOPE IS 15 FEET OR LESS, ONLY ONE ROW OF STEEL STAKES 2 FEET FROM THE TOP EDGE OF RIPRAP WILL BE REQUIRED UNLESS OTHERWISE NOTED ON PLANS.
4. FOR DIMENSIONS A, B, V, & T. SEE BRIDGE OR ROADWAY PLANS.
5. T=12" UNLESS OTHERWISE SHOWN ON PLANS; T=18" AT BRIDGES.
6. FASTENERS FOR SPLICES AND/OR SELVEDGE END CONNECTORS MAY BE WIRE TIES, INTERLOCKING WIRE CLIPS, HOG RINGS, OR LACING WIRE. ONLY FASTENERS WHICH APPEAR ON THE DEPARTMENT'S "APPROVED PRODUCTS LIST" MAY BE USED.
7. LACING SHALL BE CONTINUOUS AS FAR AS IS PRACTICAL AND SHALL PASS THROUGH EACH MESH OPENING.
8. WHERE SPLICING IS NECESSARY, AN OVERLAP OF LACING OF AT LEAST 1 FOOT SHALL BE PROVIDED.

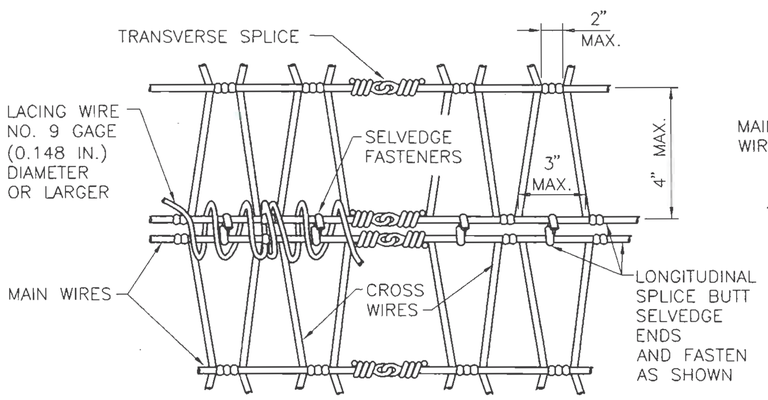

NORMAL INTERSECTION SPLICES

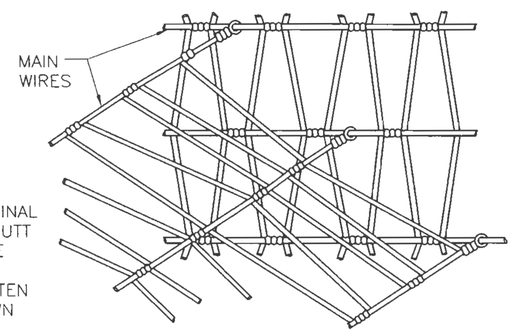

SKEWED INTERSECTION SPLICE

"W" MESH

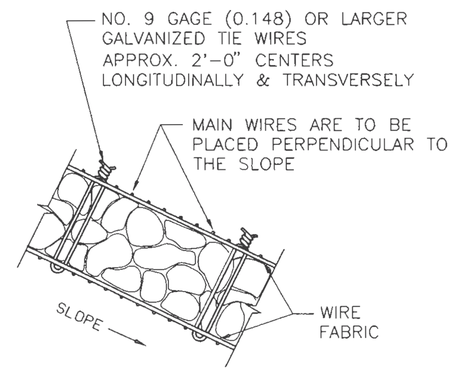

TYPICAL SECTION

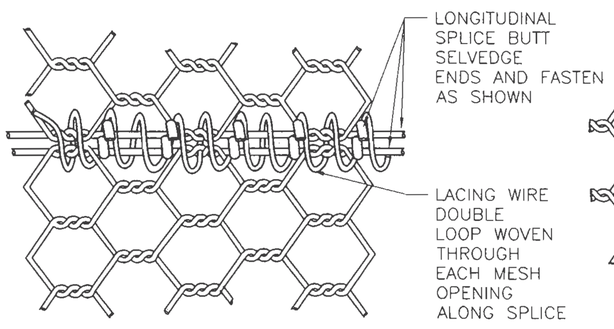

NORMAL INTERSECTION SPLICE

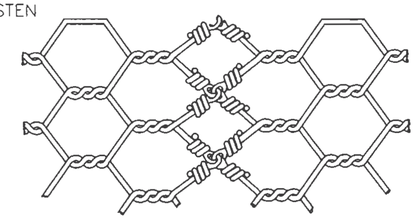

TRANSVERSE SPLICE

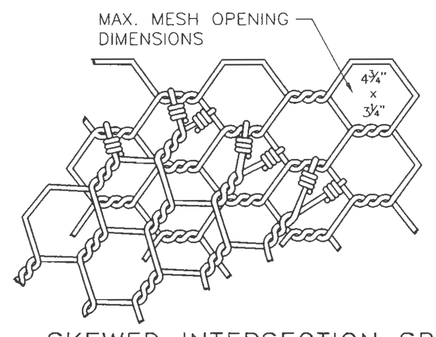

SKEWED INTERSECTION SPLICE

HEXAGONAL MESH

RAY M. TRUJILLO NEW MEXICO REGISTERED PROFESSIONAL ENGINEER 11/16/09

NO.	DATE	REV.BY	DESCRIPTION

REVISIONS (OR CHANGE NOTICES)

NEW MEXICO DEPARTMENT OF TRANSPORTATION STANDARD DRAWING

WIRE ENCLOSE RIPRAP CLASS "A"

DESIGNED BY____ DRAWN BY SKL CHECKED BY YML

SHEET 10-4

602-01-1/1

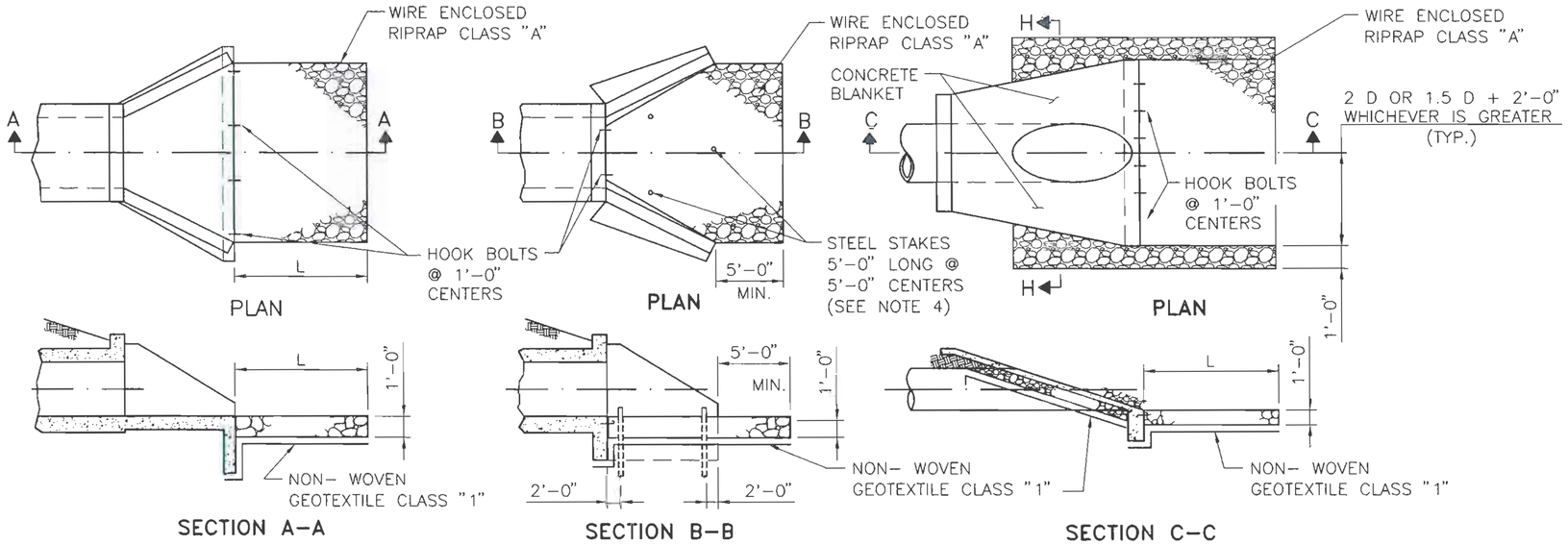

BOX CULVERTS WITH APRONS

BOX CULVERTS WITHOUT APRONS

CONCRETE BLANKETS

GENERAL NOTES

1. ALL RIPRAP SHALL BE CLASS "A" UNLESS SPECIFIED OTHERWISE IN THE PLANS. DIMENSIONS OF RIPRAP CLASS "A" SHALL BE VERIFIED IN FIELD.
2. RIPRAP ON THIS STANDARD IS SHOWN FOR SINGLE PIPES AND CULVERTS ONLY. FOR MULTIPLE PIPE AND CULVERT INSTALLATIONS, EXTEND RIPRAP BEYOND OUTLET OPENING AS SHOWN IN PLAN DETAILS AND PLACE RIPRAP BETWEEN OUTLET OPENINGS AS SHOWN IN ELEVATION DETAILS.
3. SERIAL 602-02-1/1 MAY BE REFERENCED FOR DESCRIPTIONS OF WIRE MESH AND ALTERNATE PATTERNS.
4. STEEL STAKES MAY BE RAILROAD RAILS WEIGHING NOT LESS THAN 30 LBS. PER YARD, 4" NOMINAL DIAMETER STANDARD STRENGTH GALVANIZED STEEL PIPE, OR L 4" X 4"X 3/8" STEEL ANGLES. STEEL STAKES SHALL PROJECT 6" ABOVE TOP OF RIPRAP. STEEL STAKES ARE CONSIDERED INCIDENTAL TO THE COMPLETION OF THE WORK AND NO DIRECT MEASUREMENT OR PAYMENT WILL BE MADE THEREFORE.
5. CONTRACTOR MAY SUBSTITUTE CONCRETE CHEMICAL ANCHORS WITH HOOK GEOMETRY SHOWN, WHICH MEET REQUIREMENTS OF SECTION 522.
6. TOE-IN OR PLACE EROSION CONTROL GEOTEXTILE UNDER FOOTINGS OR CUT-OFF WALL.
7. L (MIN.) = 10'-0" OR 1.5 x DIAMETER OR RISE, WHICHEVER IS GREATER.

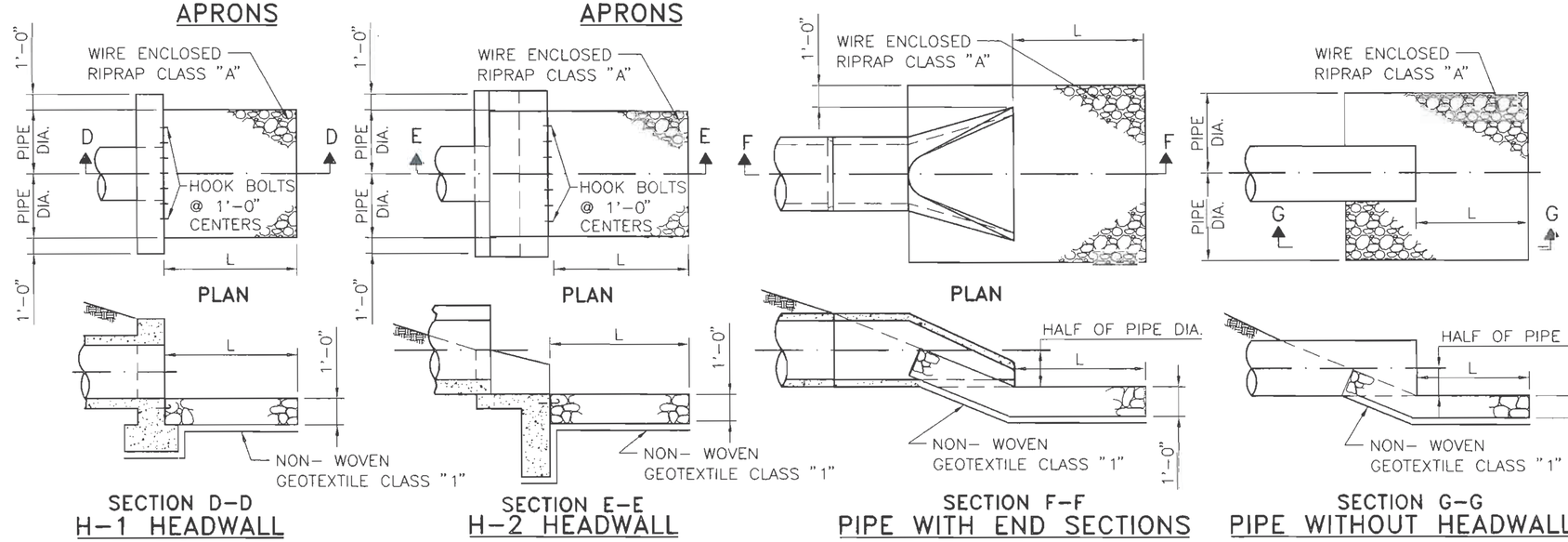

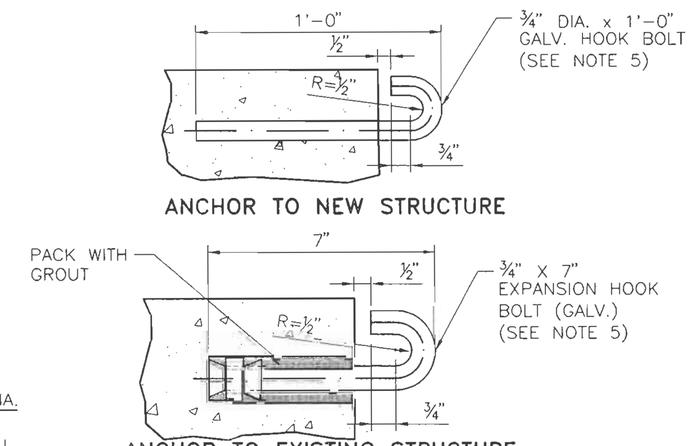

HOOK BOLT DETAILS

COST OF HOOK BOLT IN PLACE TO BE INCLUDED IN UNIT BID PRICE FOR RIPRAP.

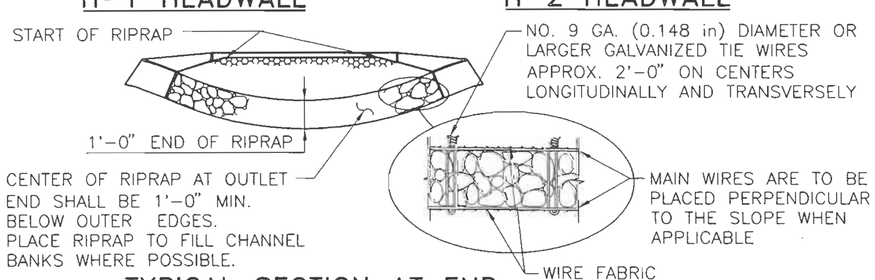

TYPICAL SECTION AT END OF RIPRAP

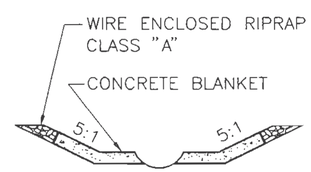

SECTION H-H

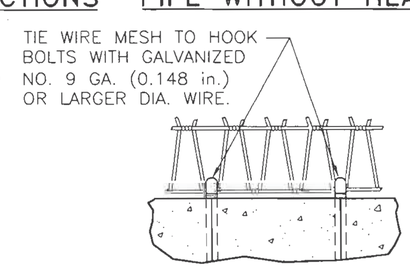

WIRE MESH ANCHOR

NOTE: SEE SHEET 602-01-1/1 FOR WIRE MESH SPLICE DETAILS.

NO.	DATE	REV.BY	DESCRIPTION
1	8/09/09	YML	GENERAL REVISIONS

REVISIONS (OR CHANGE NOTICES)

NEW MEXICO DEPARTMENT OF TRANSPORTATION STANDARD DRAWING

EROSION CONTROL AT CULVERT OUTLETS

DESIGNED BY TM DRAWN BY SKL CHECKED BY YML

SHEET10-5

602-02-1/1

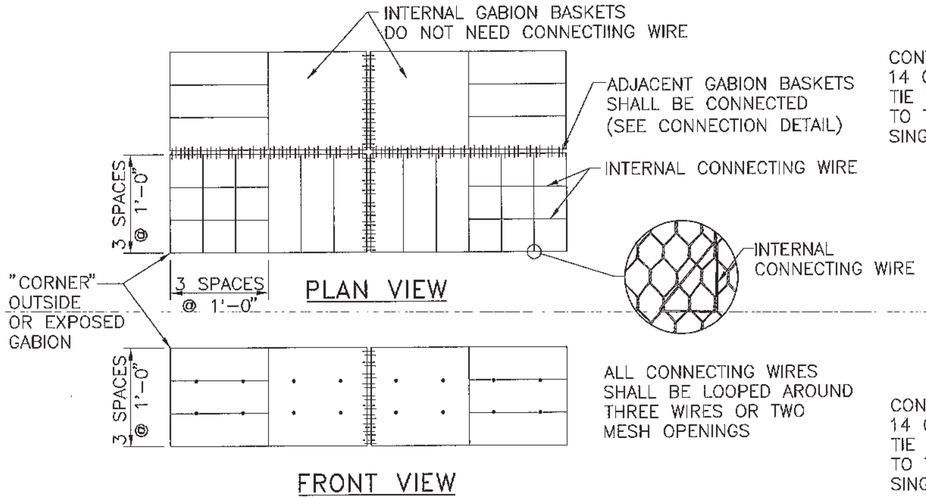

DETAILS OF 9 GAGE INTERNAL CONNECTING WIRES

STANDARD REVETMENT MATTRESS SIZES				
LENGTH	WIDTH	HEIGHT	NUMBER OF CELLS	VOLUME CUBIC YARDS
FEET				
9'-0"	6'-0"	0'-6"	3	1.00
12'-0"	6'-0"	0'-6"	4	1.33
9'-0"	6'-0"	0'-9"	3	1.50
12'-0"	6'-0"	0'-9"	4	2.00

STANDARD GABION SIZES				
LENGTH	WIDTH	HEIGHT	NUMBER OF CELLS	VOLUME CUBIC YARDS
FEET				
6'-0"	3'-0"	3'-0"	2	2.00
9'-0"	3'-0"	3'-0"	3	3.00
12'-0"	3'-0"	3'-0"	4	4.00
6'-0"	3'-0"	1'-6"	2	1.00
9'-0"	3'-0"	1'-6"	3	1.50
12'-0"	3'-0"	1'-6"	4	2.00
6'-0"	3'-0"	1'-0"	2	0.66
9'-0"	3'-0"	1'-0"	3	1.00
12'-0"	3'-0"	1'-0"	4	1.33

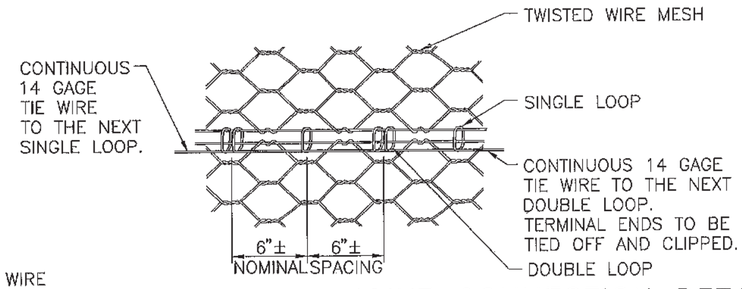

STANDARD JOINT CONNECTION DETAIL

FOR USE WITH TWISTED MESH.

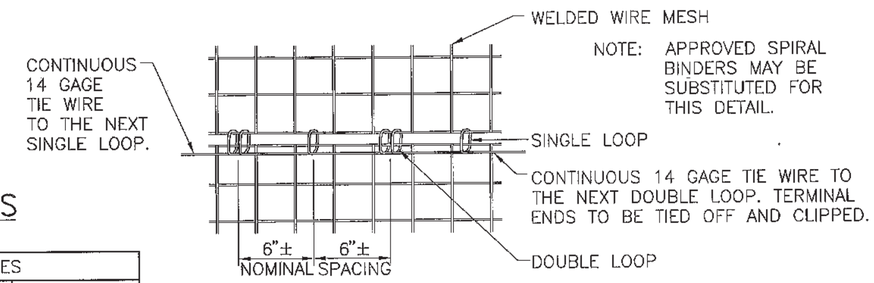

STANDARD JOINT CONNECTION DETAIL

FOR USE WITH WELDED WIRE MESH.

GENERAL NOTES

1. INTERNAL CONNECTING WIRES ARE TO BE INSTALLED ACROSS WIDTH OF INTERIOR GABIONS AND ACROSS WIDTH AND LENGTH OF END GABIONS.
2. INTERNAL CONNECTING WIRE, CONTINUOUS TIE WIRE AND GABION MESH SHALL BE GALVANIZED.
3. INTERNAL CONNECTING WIRES ARE REQUIRED ON ALL GABIONS 3'-0" HIGH AND ON ALL GABIONS 1'-6" HIGH WHEN USED TO BUILD VERTICAL STRUCTURES.
4. PREFORMED STIFFENERS (11 GAGE OR 9 GAGE) ARE AN ACCEPTABLE ALTERNATIVE TO INTERNAL CONNECTING WIRES. INSTALL THEM AS RECOMMENDED BY THE MANUFACTURER OR AS DIRECTED BY THE PROJECT MANAGER AT ONE THIRD POINTS.
5. PLACE ROCK IN THE END GABION CELL FIRST, AND CONTINUE BY FILLING INTERIOR GABION CELLS.
6. FOR GABION DIMENSIONS, REFER TO THE TABLE "STANDARD GABION SIZES."
7. A JOINT CONNECTION MUST BE MADE WHERE ANY PANEL EDGE MEETS ANOTHER PANEL. THIS INCLUDES ADJACENT GABION BASKETS, INDIVIDUAL PANELS WITHIN A BASKET, DIAPHRAGM EDGES ETC. ALL JOINT CONNECTIONS SHALL BE MADE USING 14 GAGE CONTINUOUS TIE WIRE.
8. ALTERNATE JOINT CONNECTION PROCEDURES MAY BE USED PROVIDED THAT THE COMPLETED JOINT WILL DEVELOP A TENSILE STRENGTH OF NOT LESS THAN 1400 POUNDS PER FOOT. IF ALTERNATE JOINT CONNECTION PROCEDURES ARE USED, THE CONTRACTOR SHALL SUBMIT TO THE PROJECT MANAGER CERTIFIED TEST REPORTS DEMONSTRATING THE ALTERNATE JOINT CONNECTIONS WILL MEET THE MINIMUM TENSILE STRENGTH REQUIREMENTS.

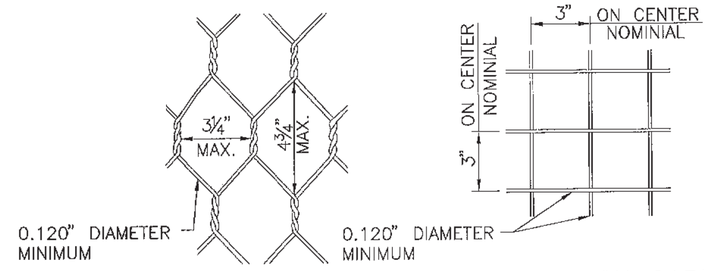

TWISTED MESH GABION

WELDED MESH GABION

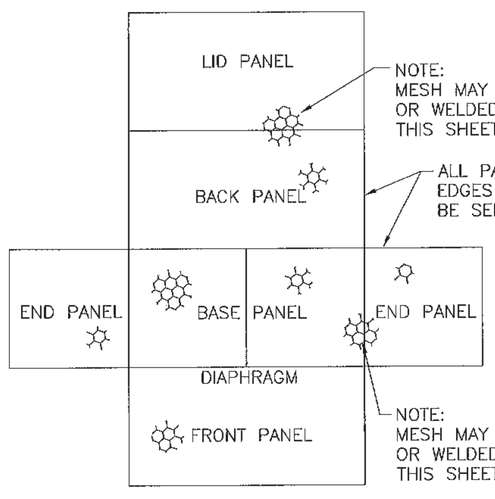

TYPICAL FLAT LAYOUT OF GABION BASKET

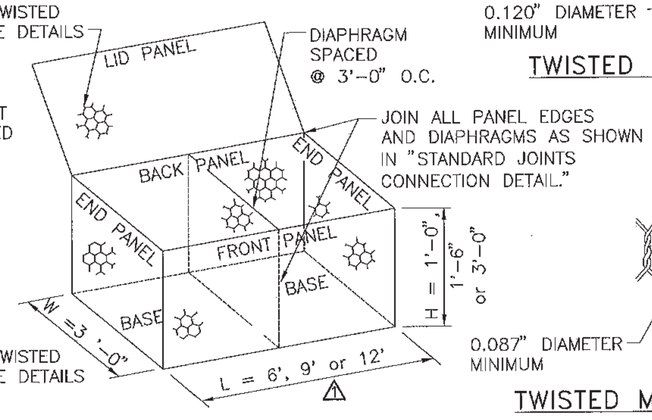

TYPICAL ASSEMBLED GABION BASKET

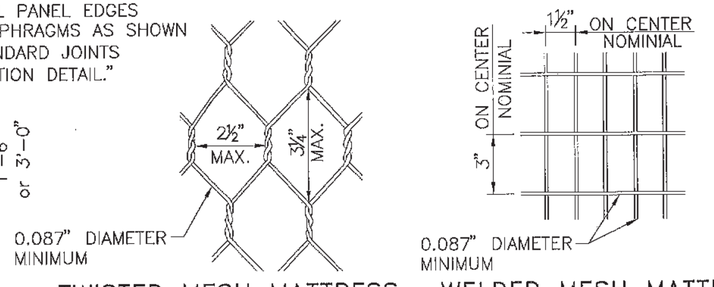

TWISTED MESH MATTRESS

WELDED MESH MATTRESS

TYPICAL ACCEPTABLE MESH STYLES

SERIAL 602-05-2/2 SHEET 2 OF 2 MUST ACCOMPANY THIS SHEET.

SHEET 10-6

TIMOTHY A. MARRS NEW MEXICO 14072 REGISTERED PROFESSIONAL ENGINEER

1-9-13

	DATE	BY	DESCRIPTION
1	1/16/09	YML	CORRECTED L = 6', 9' OR 12'

REVISIONS (OR CHANGE NOTICES)

NEW MEXICO DEPARTMENT OF TRANSPORTATION STANDARD DRAWING

GABION BASKET DETAILS

DESIGNED BY: TM DRAWN BY: SKL CHECKED BY: YML/TM

602-05-1/2

TEMPORARY EROSION & SEDIMENT CONTROL MEASURES (T.E.S.C.M.)

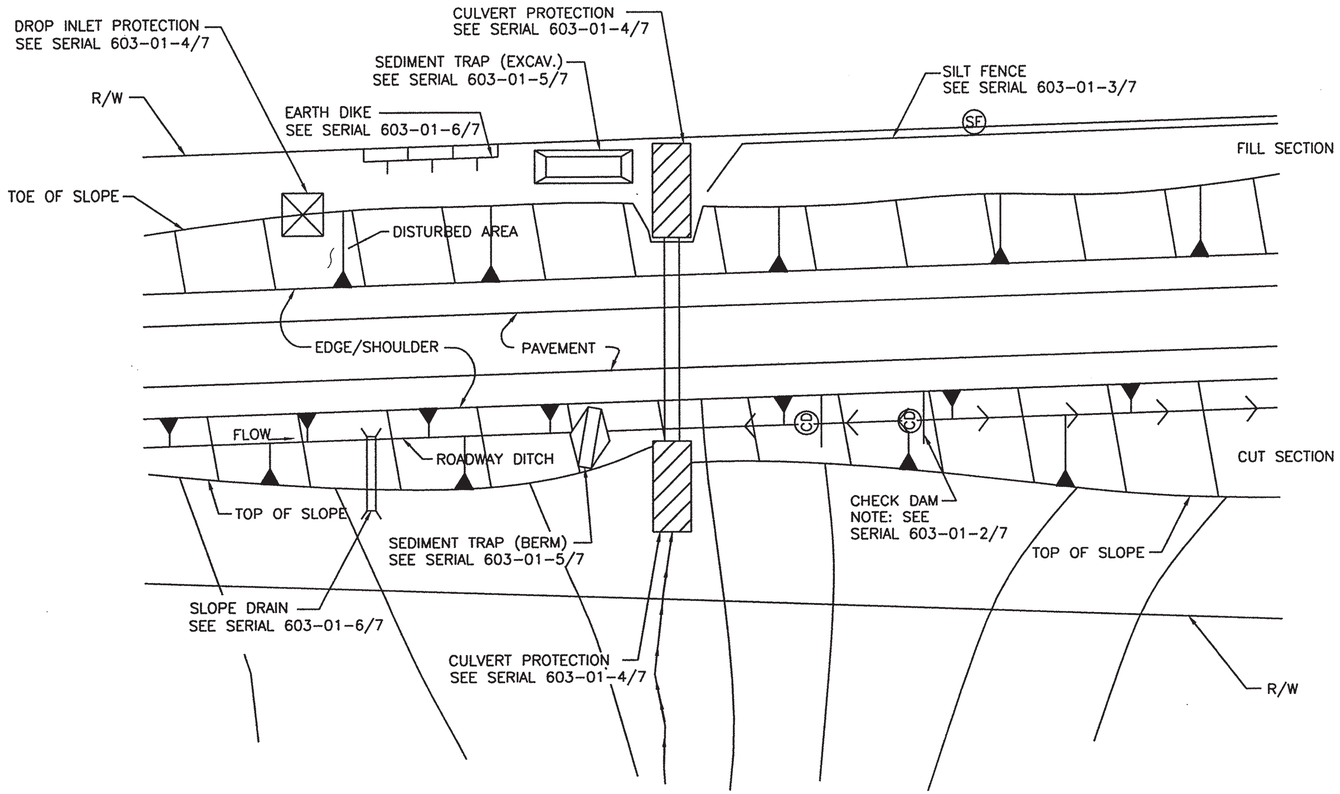

TYPICAL USAGE OF SELECTED EROSION AND SEDIMENT CONTROL MEASURES

GENERAL NOTES

1. THE SOIL RETENTION BLANKET INSTALLATION DETAILS SHOWN FOR CULVERT PROTECTION SHALL BE USED FOR ALL TEMPORARY EROSION AND SEDIMENT CONTROL MEASURES UTILIZING SOIL RETENTION BLANKETS UNLESS OTHERWISE NOTED.
2. ROCK PLATING USED IN THE TEMPORARY EROSION AND SEDIMENT CONTROL MEASURES SHOWN ON THESE SHEETS SHALL HAVE A MINIMUM THICKNESS OF 6 INCHES UNLESS OTHERWISE INDICATED.
3. ALL TEMPORARY EROSION AND SEDIMENT CONTROL MEASURES PLACED WITHIN THE CONSTRUCTION CLEAR ZONE SHALL BE INSTALLED WITH 8:1 SLOPES PARALLEL TO TRAFFIC AND 4:1 SLOPES PERPENDICULAR TO TRAFFIC.
4. SEDIMENT TRAPS SHALL BE CLEANED OF ACCUMULATED SEDIMENT WHEN APPROXIMATELY 50% FILLED.
5. CHECK DAMS SHALL BE CLEANED OF ACCUMULATED SEDIMENT WHEN THE DEPOSITS REACH APPROXIMATELY ONE-HALF THE HEIGHT OF THE CHECK DAM.
6. CULVERT PROTECTIONS SHALL BE INSTALLED UPON INITIATION OF EARTH WORK ACTIVITIES AND MAINTAINED AS MUCH AS PRACTICAL UNTIL STABILIZATION IS COMPLETED AND ACCEPTED. CULVERT PROTECTIONS MAY BE REMOVED FOR PERIODS OF TIME AS REQUIRED DURING CONSTRUCTION TO COMPLETE ADJACENT IMPROVEMENTS.
7. THE CONTRACTOR MAY CONSTRUCT AN EARTH DIKE AS SHOWN, OR RELOCATE THE CHECK DAMS AS CONSTRUCTION PROGRESSES. NO DIRECT PAYMENT SHALL BE MADE FOR RELOCATION OF THE CHECK DAMS.
8. STRAW BALES ARE NOT INTENDED FOR USE ON NEW MEXICO DEPARTMENT OF TRANSPORTATION PROJECTS.

STANDARD SYMBOLS FOR EROSION AND SEDIMENT CONTROL MEASURES

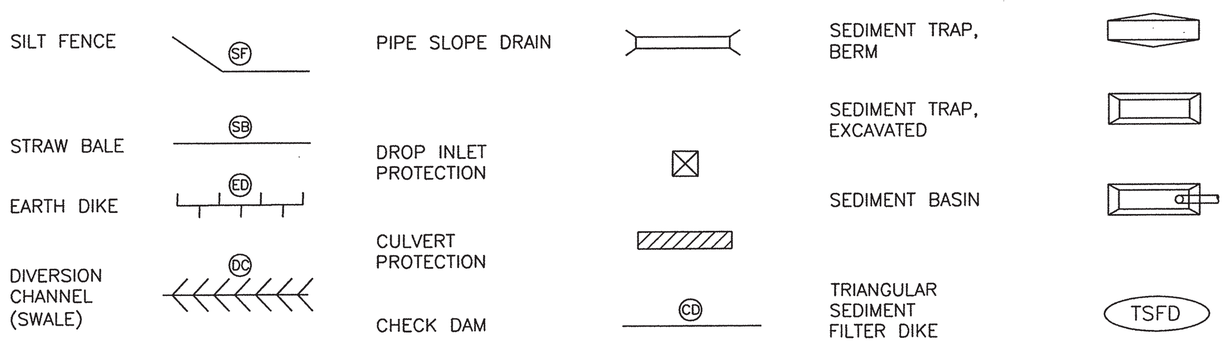

NO.	DATE	REV. BY	DESCRIPTION

REVISIONS (OR CHANGE NOTICES)

NEW MEXICO DEPARTMENT OF TRANSPORTATION STANDARD DRAWING

TEMPORARY EROSION & SEDIMENT CONTROL MEASURES

APPROVED Raymond Van Hoven 11/29/09
DESIGN ENGINEER DATE

DESIGNED BY___ DRAWN BY ___ CHECKED BY ___

SHEET 10-7

603-01-1/7 SERIAL 1 OF 7

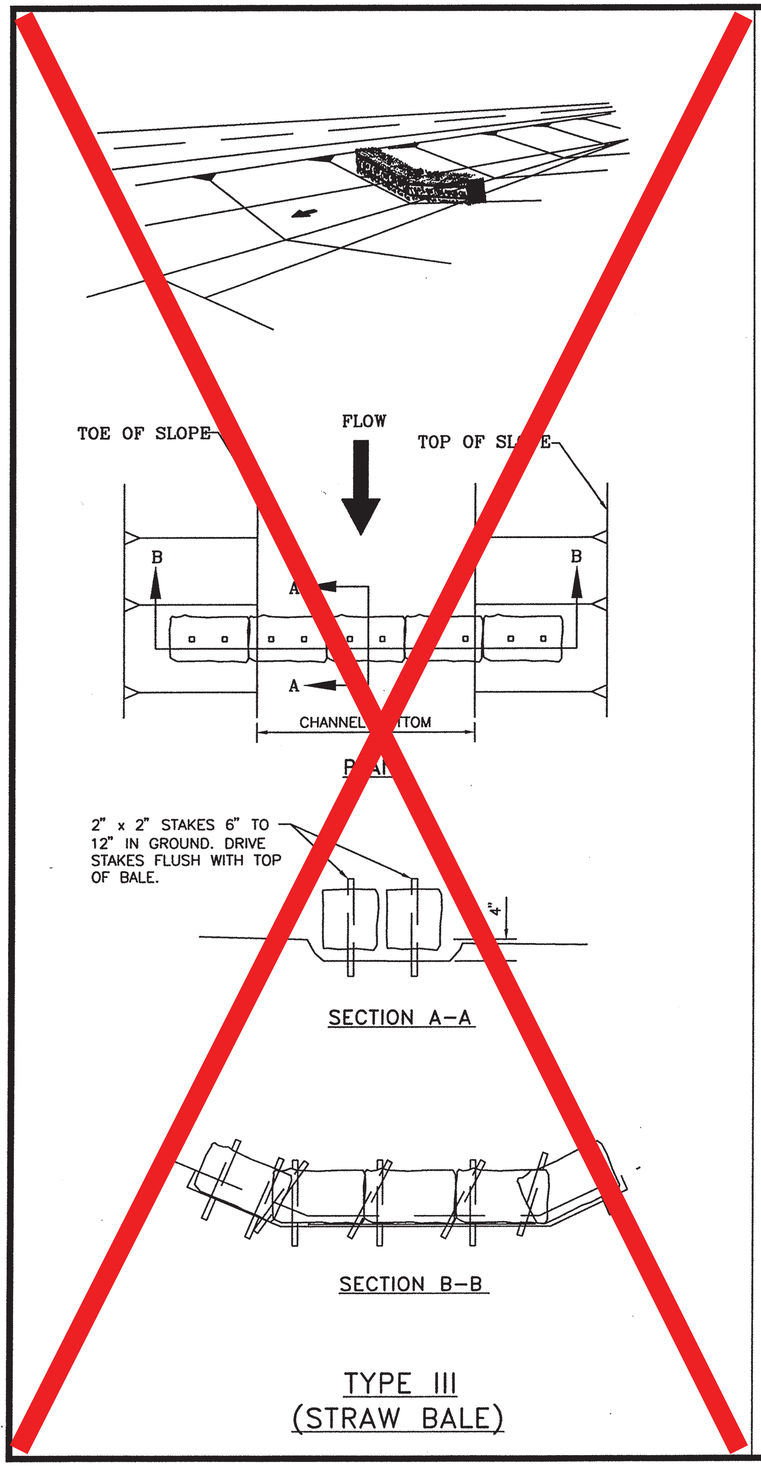

TYPE III
(STRAW BALE)

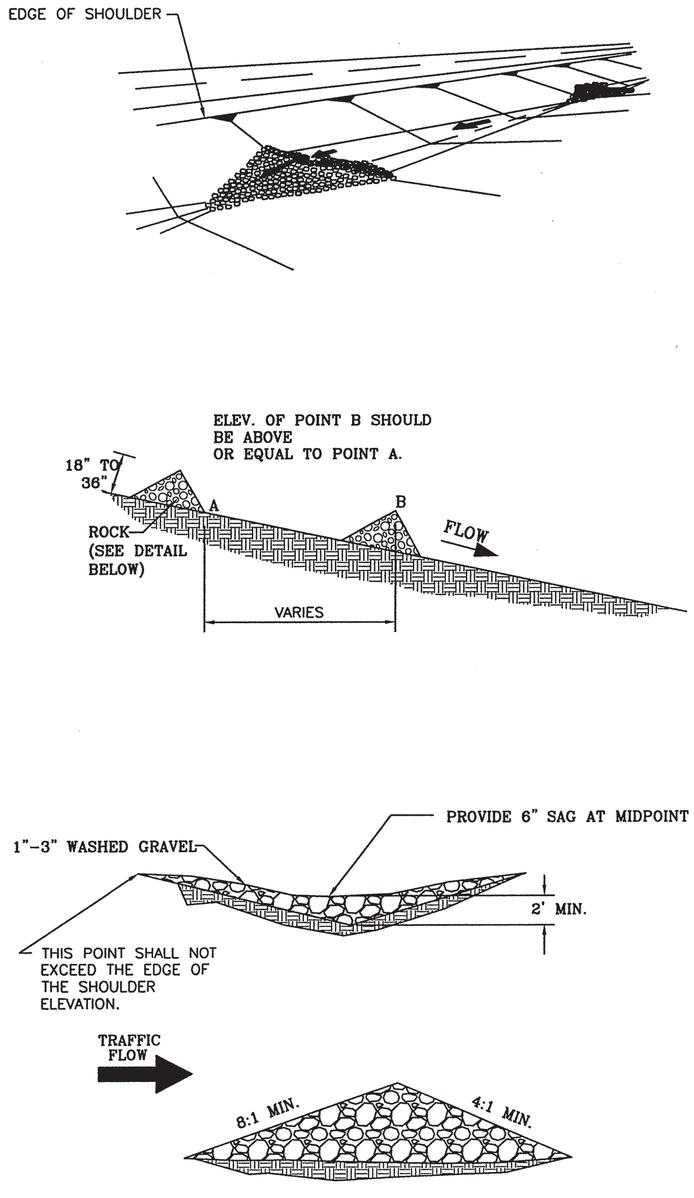

TYPE II
STONE DAM

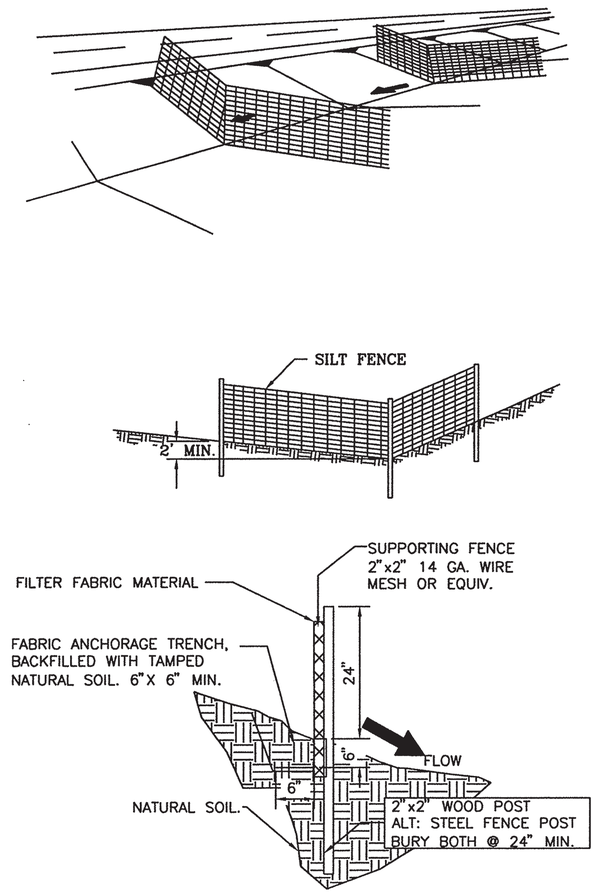

TYPE I SILT FENCE

NO.	DATE	REV. BY	DESCRIPTION

REVISIONS (OR CHANGE NOTICES)

NEW MEXICO
DEPARTMENT OF TRANSPORTATION
STANDARD DRAWING

TEMPORARY EROSION & SEDIMENT CONTROL MEASURES
CHECK DAMS

APPROVED Raymunda VanHoven 11/29/04
DESIGN ENGINEER DATE

DESIGNED BY___ DRAWN BY ___ CHECKED BY ___

603–01–2/7 SHEET 2 OF 7

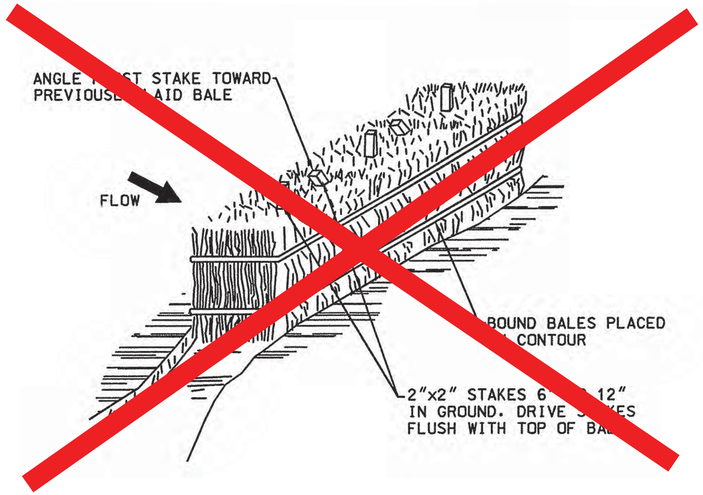

TYPE II
STRAW BALE OPTION

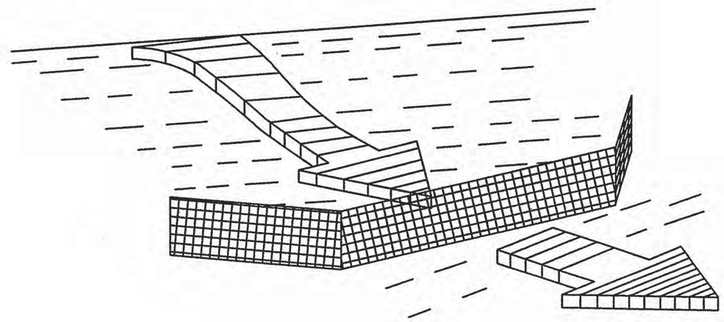

TYPE I
SILT FENCE

NOTES: SILT FENCE AND CHECK DAM

THE CONTRACTOR SHALL BE RESPONSIBLE FOR DETERMINING THE POST SPACING FOR SILT FENCES TO MINIMIZE MAINTENANCE.

1. POST SPACING SHALL BE 4 FT. MAXIMUM WITHOUT SUPPORTING FENCE, 10 FT. MAXIMUM WITH SUPPORTING FENCE.
2. POSTS FOR 4 FT. MAXIMUM POST SPACING SHALL BE 2 INCH SQUARE NOMINAL SIZE OR HEAVIER WOOD POSTS, OR STANDARD "T" OR "U" SECTION STEEL POSTS WEIGHING NOT LESS THAN 2 LBS. PER. LINEAR FOOT.

   POSTS FOR 10 FT. MAXIMUM POST SPACING SHALL BE 4 INCH SQUARE NOMINAL SIZE OR HEAVIER WOOD POSTS, OR STEEL POSTS AS SPECIFIED ABOVE.
3. SUPPORTING FENCE SHALL BE WIRE MESH (14 GA. MIN., 1 INCH MAX. MESH OPENINGS), SNOW FENCE, PLASTIC FENCE OR APPROVED.
4. SUPPORTING FENCE SHALL BE FASTENED SECURELY TO POSTS WITH STAPLES OR WIRE TIES. GEOTEXTILE FABRIC SHALL BE FASTENED SECURELY TO SUPPORTING FENCE WITH WIRE TIES SPACED AT 2 FT. CENTERS ALONG THE TOP AND MID-SECTION. WHEN A SUPPORTING FENCE IS NOT USED, GEOTEXTILE FABRIC SHALL BE SECURELY FASTENED TO POSTS WITH STAPLES OR WIRE TIES.
5. WHEN SILT FENCE IS USED FOR CHECK DAMS INSTALLED IN DITCHES, A SUPPORTING FENCE SHALL BE PROVIDED, WITH MAXIMUM POST SPACING OF 10 FT.
6. STANDARD "T" OR "U" SECTION STEEL POSTS SHALL NOT BE USED WITHIN THE CONSTRUCTION CLEAR ZONE RECOVERY AREA.
7. STRAW BALES ARE NOT INTENDED FOR USE ON NEW MEXICO DEPARTMENT OF TRANSPORTATION PROJECTS.

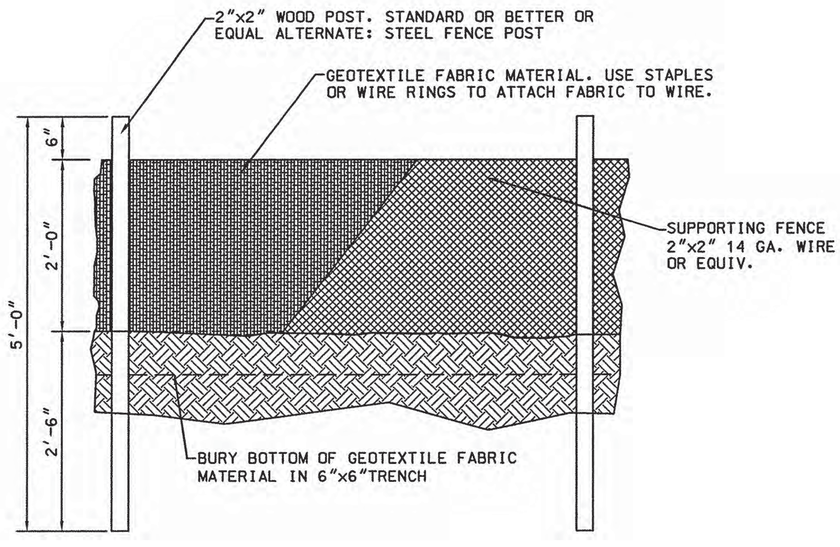

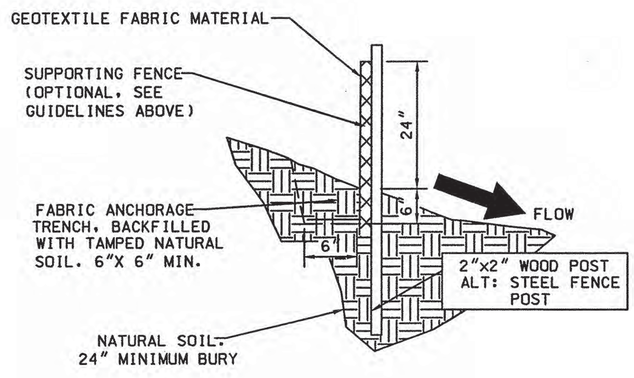

NO.	DATE	REV. BY	DESCRIPTION

REVISIONS (OR CHANGE NOTICES)

NEW MEXICO DEPARTMENT OF TRANSPORTATION STANDARD DRAWING

TEMPORARY EROSION & SEDIMENT CONTROL MEASURES SILT FENCE

APPROVED Raymunda Von Hoven 11/29/09
DESIGN ENGINEER DATE

DESIGNED BY___ DRAWN BY___ CHECKED BY___

603-01-3/7

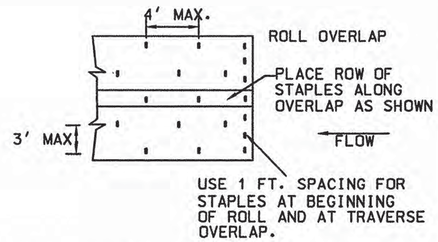

SOIL RETENTION BLANKET
STAPLE PATTERN

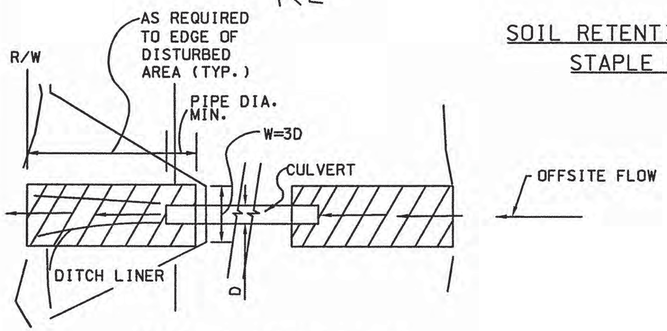

TYPICAL DITCH LINER
INSTALLATIONS AT CULVERTS

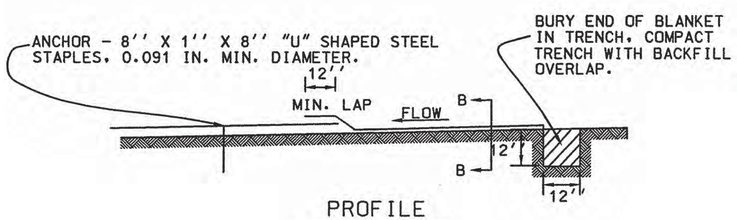

PROFILE
DITCH LINER

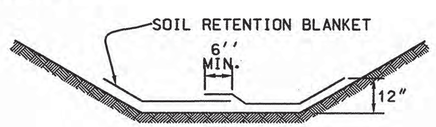

SECTION B-B

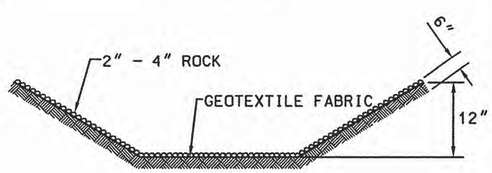

SECTION B-B

NOTES: CULVERT PROTECTION

1. WHEN CULVERT PROTECTION IS SPECIFIED, EITHER SOIL RETENTION BLANKETS OR SOIL RETENTION ROCK MAY BE PROVIDED.
2. THE CULVERT PROTECTION WIDTH REQUIRED SHALL BE IN ACCORDANCE WITH THESE DETAILS UNLESS SPECIFIED OTHERWISE.
3. THE SOIL RETENTION BLANKET INSTALLATION SHOWN OUTLINES MINIMUM REQUIREMENTS. MANUFACTURER'S RECOMMENDATIONS SHALL BE USED IF THEY ARE MORE STRINGENT.

CULVERT PROTECTION

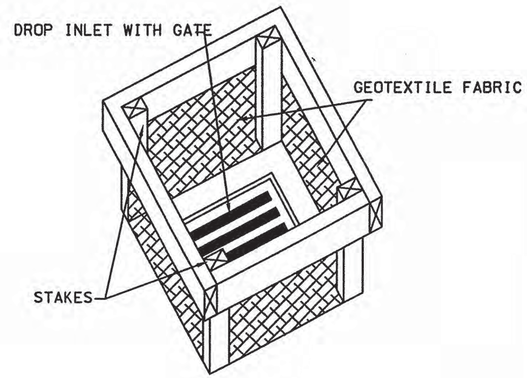

TYPE I

NOTE: WHEN SPECIFIED, ROCKS OR STRAW BALES CAN BE SUBSTITUTED FOR SILT FENCE.

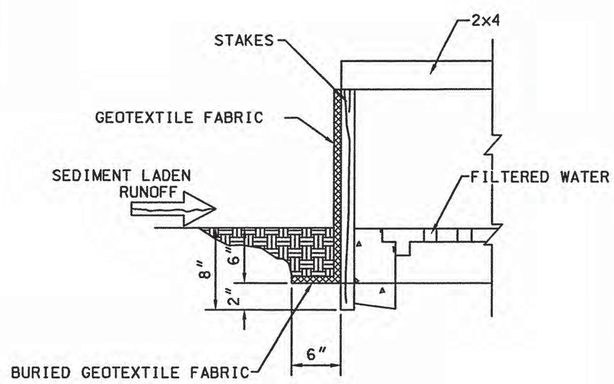

DROP INLET PROTECTION

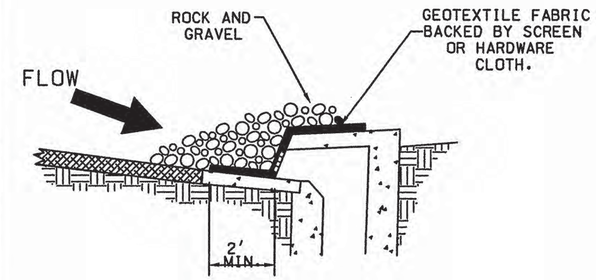

TYPE I
CURB OPENING

NOTES: GRAVEL INLET PROTECTION

1. THIS INSTALLATION IS FOR A TYPE I CURB DROP INLET ONLY. THE TYPE II, III TO "N" INSTALLATION IS SIMILAR.
2. THE SPACING OF THE LONGITUDINAL BRACING SHALL NOT EXCEED 5 FT.

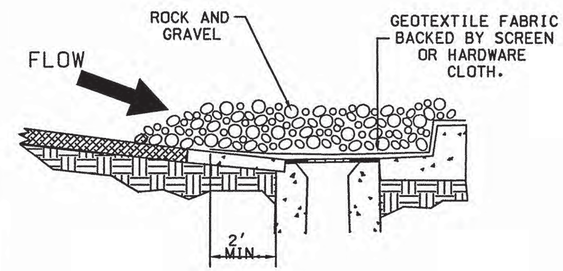

TYPE II
CURB DROP INLET

NO.	DATE	REV. BY	DESCRIPTION

REVISIONS (OR CHANGE NOTICES)

NEW MEXICO
DEPARTMENT OF TRANSPORTATION
STANDARD DRAWING

TEMPORARY EROSION & SEDIMENT CONTROL MEASURES
CULVERT & DROP INLET PROTECTION

APPROVED Raymunda Van Hoven 11/29/09
DESIGN ENGINEER DATE

DESIGNED BY___ DRAWN BY___ CHECKED BY___

603-01-4/7

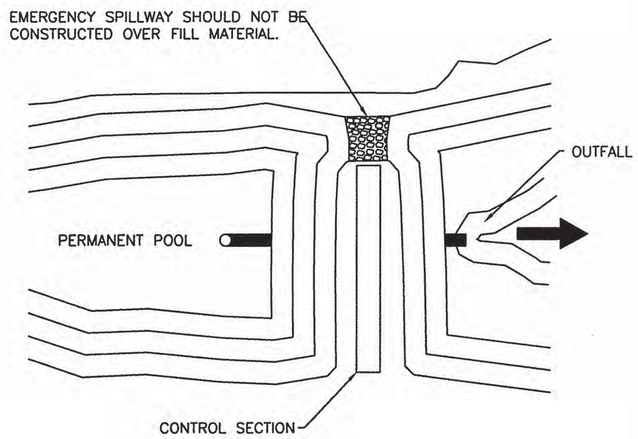

PLAN VIEW

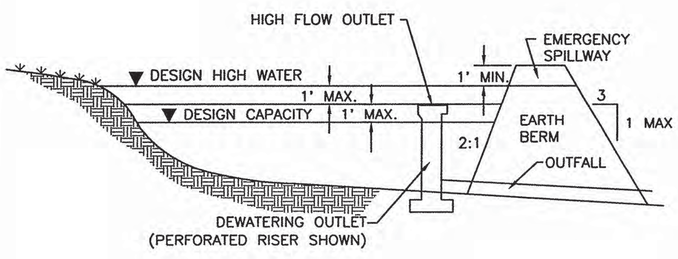

CROSS SECTION

SEDIMENT BASIN

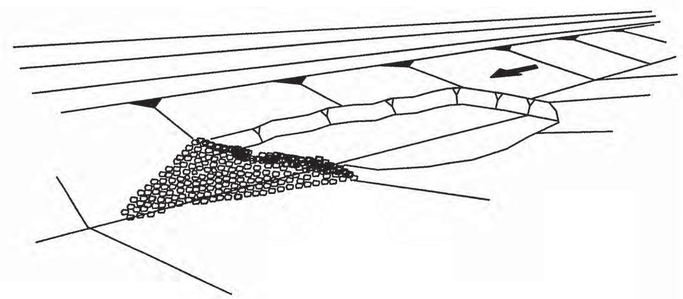

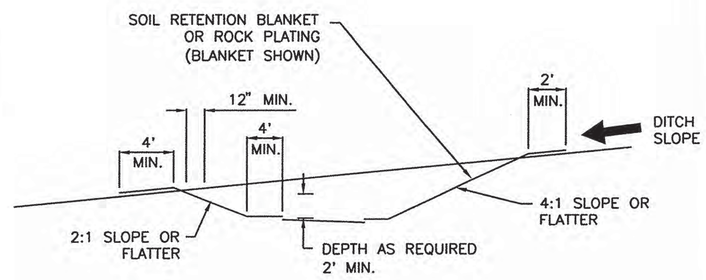

SEDIMENT BASIN, EXCAVATED

NOTES: SEDIMENT TRAP

1. TEMPORARY SEDIMENT TRAPS MAY BE CONSTRUCTED BY EXCAVATION ALONE OR BY EXCAVATION IN COMBINATION WITH AN EMBANKMENT.
2. TEMPORARY SEDIMENT TRAPS ARE OFTEN USED IN CONJUNCTION WITH A DIVERSION DIKE OR SWELL.
3. THE DRAINAGE AREA FOR THE SEDIMENT TRAP SHOULD NOT EXCEED 5 DISTURBED ACRES.
4. THE TRAP MUST BE ACCESSIBLE FOR EASE OF REGULAR MAINTENANCE, WHICH IS CRITICAL TO ITS PROPER FUNCTIONING.
5. SEDIMENT TRAPS ARE TEMPORARY MEASURES AND SHOULD NOT REMAIN IN PLACE LONGER THAN 18 TO 24 MONTHS.
6. THE EMBANKMENT MAY NOT EXCEED 5 FT. IN HEIGHT.
7. THE RECOMMENDED MINIMUM WIDTH AT THE TOP OF THE EMBANKMENT IS BETWEEN 2 FT. AND 5 FT.

SEDIMENT TRAP

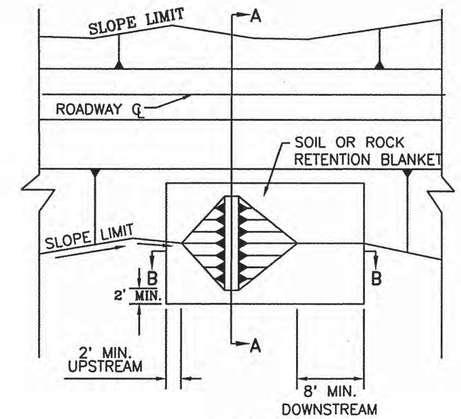

PLAN

SECTION A–A

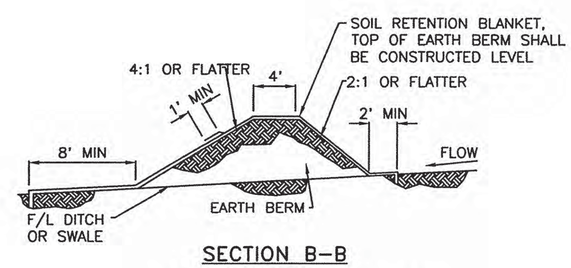

SECTION B–B

EARTH DIKE (BERM)

NO.	DATE	REV. BY	DESCRIPTION

REVISIONS (OR CHANGE NOTICES)

NEW MEXICO DEPARTMENT OF TRANSPORTATION STANDARD DRAWING

T.E.S.C.M.
SEDIMENT BASIN, SEDIMENT TRAP & EARTH DIKE

APPROVED Raymunda VanHoven 11/29/09
DESIGN ENGINEER DATE

DESIGNED BY___ DRAWN BY ___ CHECKED BY ___

603-01-5/7 SHEET 5 OF 7

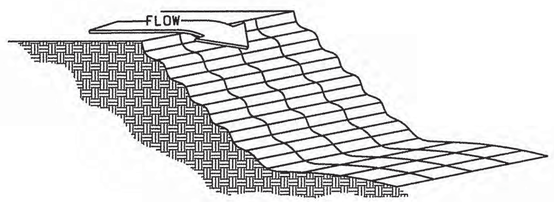

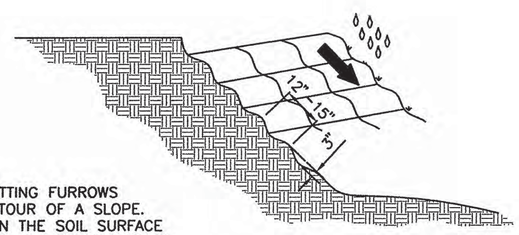

GROOVING IS CUTTING FURROWS ALONG THE CONTOUR OF A SLOPE. IRREGULARITIES IN THE SOIL SURFACE CATCH RAINWATER AND PROVIDE SOME RETENTION OF LIME, FERTILIZER AND SEED.

GROOVING SLOPES

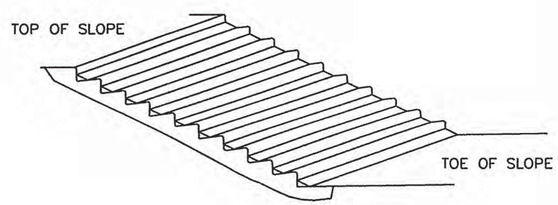

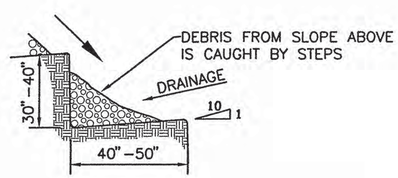

STAIR STEPPING CUT SLOPE

SURFACE ROUGHENING

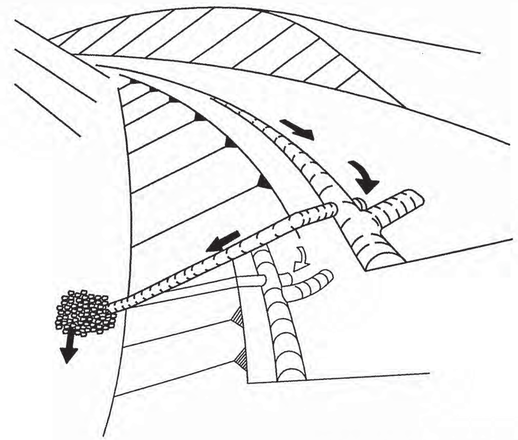

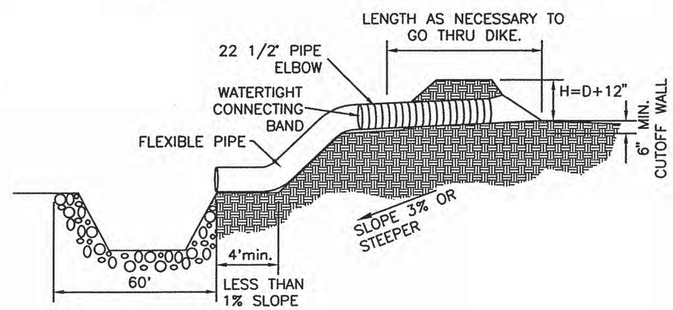

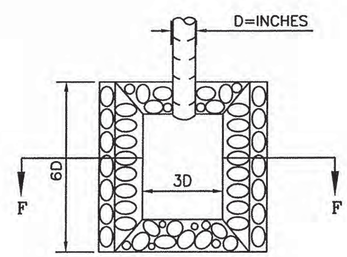

RIPRAP APRON PLAN

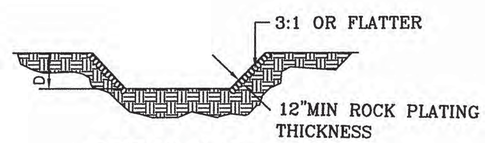

SECTION F-F

SLOPE DRAIN

NOTES: PIPE SLOPE DRAIN

1. THE FLEXIBLE PIPE SHALL BE THE SAME DIAMETER AS THE INLET PIPE AND SHALL BE CONSTRUCTED OF A DURABLE MATERIAL WITH HOLD-DOWN GROMMETS SPACED AT 10 FT. ON CENTER.
2. THE FLEXIBLE PIPE SHALL BE SECURELY FASTENED TO THE CORRUGATED METAL OR HIGH DENSITY POLYETHYLENE PIPE WITH METAL STRAPPING OR WATERTIGHT CONNECTING COLLARS.
3. THE FLEXIBLE PIPE SHALL BE STAKED AT 10 FT. CENTERS ALONG THE SLOPE USING MINIMUM 4 INCH SQUARE WOOD POSTS OR STANDARD STEEL POSTS DRIVEN 2 FT. MINIMUM INTO THE GROUND.
4. RIGID PIPE SHALL BE ANCHORED AT BENDS. ANCHORAGE SHALL CONSIST OF A MINIMUM 4 INCH SQUARE WOOD POSTS OR STANDARD STEEL POSTS DRIVEN 2 FT. MINIMUM INTO GROUND, OR EARTHEN THRUST BLOCK.
5. PAYMENT OF BASIN ITEMS ARE INCIDENTAL TO THE COST OF FLEXIBLE STORM DRAIN PIPE.
6. FOR PIPE DIAMETER ON TEMPORARY SLOPE DRAIN SEE TABLE BELOW

TEMPORARY SLOPE DRAIN PIPES

Runoff Flow Rate (cfs)	Pipe Diameter Required (inches)
0 – 6.0	18
6.0 – 9.0	21
9.0 – 12.0	24
12.0 – 20.0	30

NO.	DATE	REV. BY	DESCRIPTION

REVISIONS (OR CHANGE NOTICES)

NEW MEXICO
DEPARTMENT OF TRANSPORTATION
STANDARD DRAWING

TEMPORARY EROSION & SEDIMENT CONTROL MEASURES PIPE SLOPE DRAIN & SURFACE ROUGHENING

APPROVED Raymond Van Haren 11/29/09
DESIGN ENGINEER DATE

DESIGNED BY___ DRAWN BY ___ CHECKED BY ___

603-01-6/7 SHEET 6 OF 7

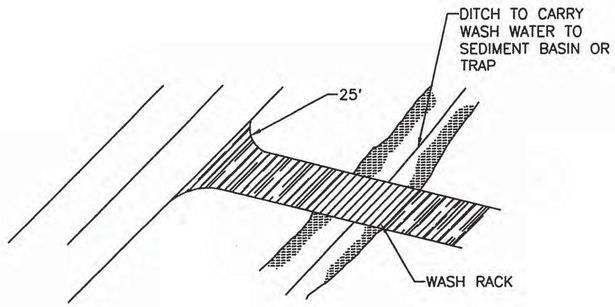

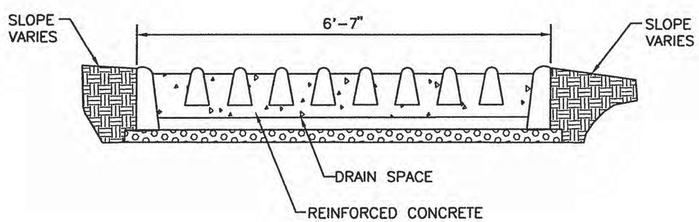

WASH RACK

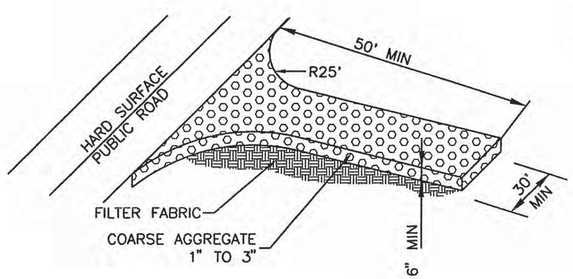

OFFSITE TRACKING PREVENTION

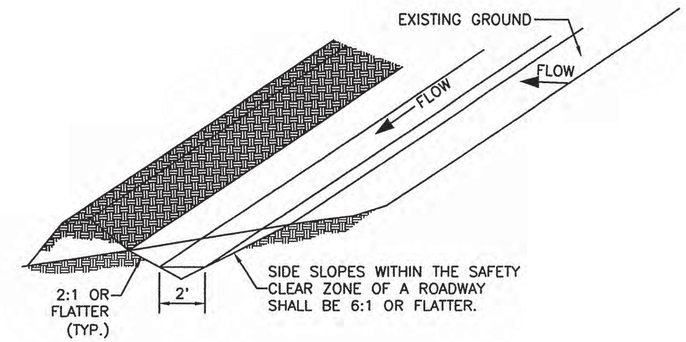

TYPICAL SWALE CONFIGURATION

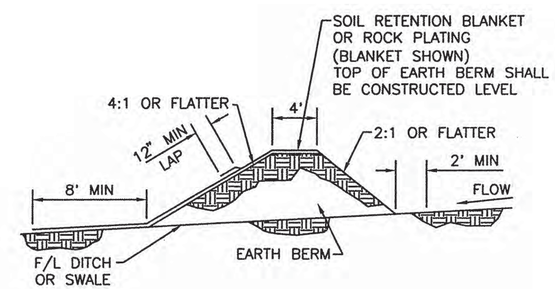

FILTER FABRIC DIVERSION DIKE

DIVERSION DIKE

NO.	DATE	REV. BY	DESCRIPTION

REVISIONS (OR CHANGE NOTICES)

NEW MEXICO DEPARTMENT OF TRANSPORTATION STANDARD DRAWING

T.E.S.C.M. OFFSITE TRACKING PREVENTION & DIVERSION DIKE

APPROVED Raymunda Van Hoven 11/24/09
DESIGN ENGINEER DATE

DESIGNED BY___ DRAWN BY ___ CHECKED BY ___

603-01-7/7 SHEET 7 OF 7

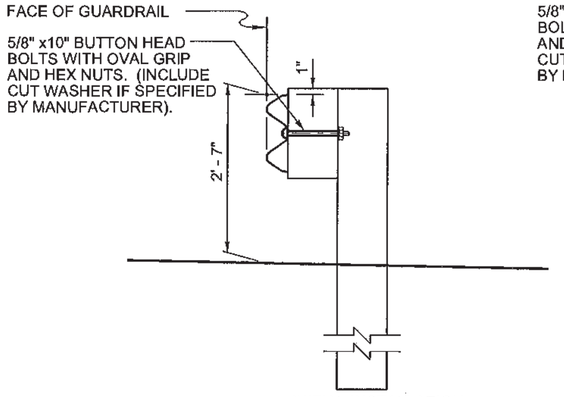

INITIAL INSTALLATION

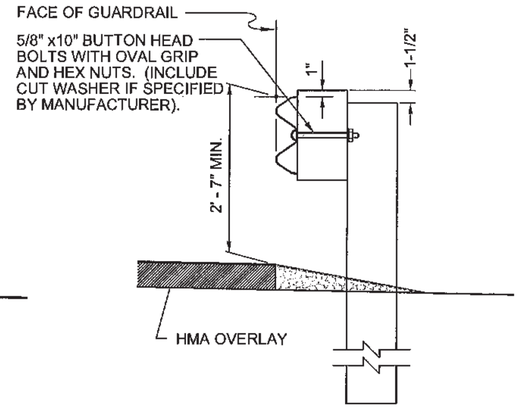

RAISED RAIL ELEMENT FOR HMA OVERLAYS

SINGLE FACE W-BEAM GUARDRAIL

(PAID BY LIN. FT.)

NOTES

1. SINGLE AND DOUBLE FACE W-BEAM GUARDRAIL POST SPACING SHALL BE 6'-3" ON CENTER.
2. SINGLE AND DOUBLE FACE W-BEAM GUARDRAIL SHALL USE W6 x 8.5 STEEL POSTS FOR SPACER BLOCK DETAILS, SEE SHEET 606-GR31-4/20.
3. EXISTING POSTS SHALL NOT BE RAISED. REPLACE POSTS AS NECESSARY TO ACHIEVE REQUIRED GUARDRAIL HEIGHT.
4. REFLECTOR TABS SHALL BE PLACED AT 25' INTERVALS (EVERY 25' AT SPLICE) ON ALL GUARDRAIL INSTALLATIONS (12'-6" ON 2 LANE HIGHWAY). THE COLOR OF THE REFLECTIVE SHEETING ON THE REFLECTOR TABS SHALL BE THE SAME AS THE COLOR OF THE SHOULDER LINE PAVEMENT MARKING IN FRONT OF THE BARRIER. TABS SHALL HAVE A MINIMUM OF 8.75 SQ. IN. OF TYPE VIII OR BETTER REFLECTIVE SHEETING ON BOTH SIDES AND SHALL ATTACH SECURELY UNDER HEAD OF 5/8" BUTTON HEAD BOLT.
5. SPLICES SHALL BE LAPPED SO THE FREE END DOES NOT FACE TRAFFIC FLOW.
6. CONSTRUCTION TOLERANCE SHALL BE ± 1/2" FOR GUARDRAIL HEIGHT.
7. GUARDRAIL FACE MAY BE PLACED AT EDGE OF SHOULDER ONLY WHEN SLOPES BEHIND GUARDRAIL WILL NOT ALLOW FOR 2' TYPICAL SETBACK, SEE SHEET 606-GR31-6/20.
8. POST LEAVE OUT SHALL BE OBSERVED WHEN POSTS ARE RESTRAINED BY ROCK, ASPHALT, OR CONCRETE OR ARE PLACED IN THE SURFACING TAPER. SEE SHEET 606-GR31-5/20 FOR POST LEAVEOUT.
9. DOUBLE FACE W-BEAM GUARDRAIL SHALL BE PAID AS MEASURED ALONG CENTERLINE OF POST OF INSTALLATION. EACH RAIL ELEMENT WILL NOT BE MEASURED AND PAID SEPARATELY.
10. SEE SHEET 606-GR31-6/20 FOR TYPICAL GUARDRAIL INSTALLATIONS.

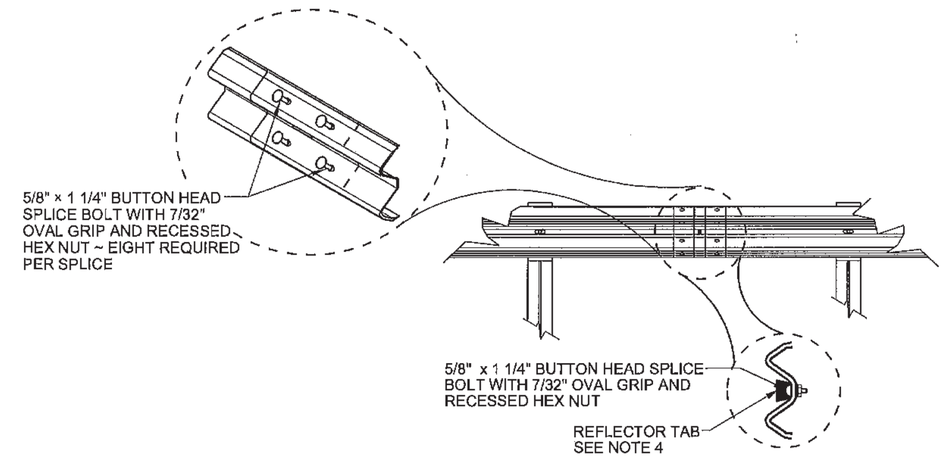

REFLECTOR TABS AT SPLICE

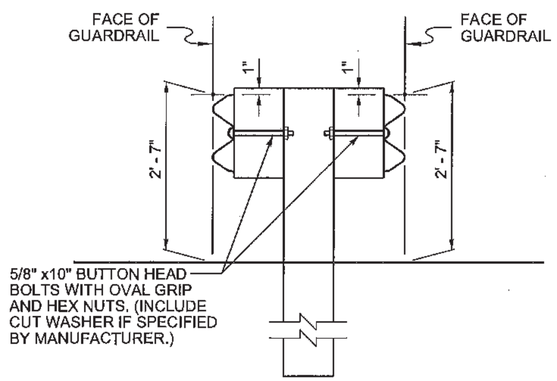

DOUBLE FACE W-BEAM GUARDRAIL

(PAID BY LIN. FT.)

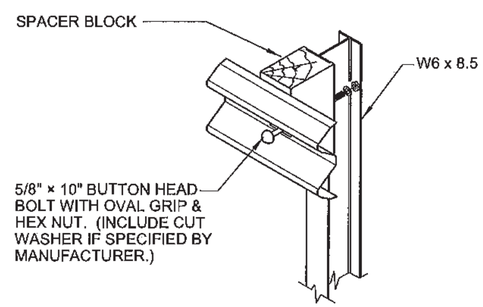

ASSEMBLY DETAIL W-BEAM

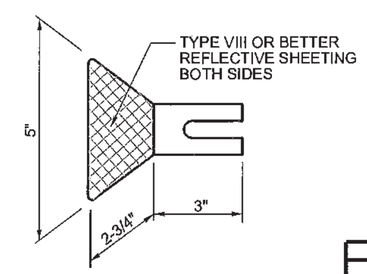

REFLECTORIZED WASHER

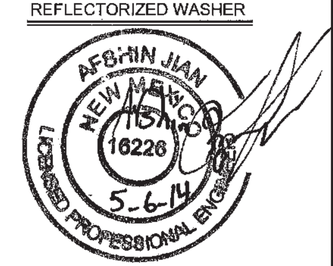

NO.	DATE	REV. BY	DESCRIPTION

REVISIONS (OR CHANGE NOTICES)

NEW MEXICO
DEPARTMENT OF TRANSPORTATION
STANDARD DRAWING

W-BEAM GUARDRAIL

APPROVED _____ DESIGN ENGINEER _____ DATE

SHEET 10-14

DRAWING SCALE = NOT TO SCALE

606-GR31-1/20

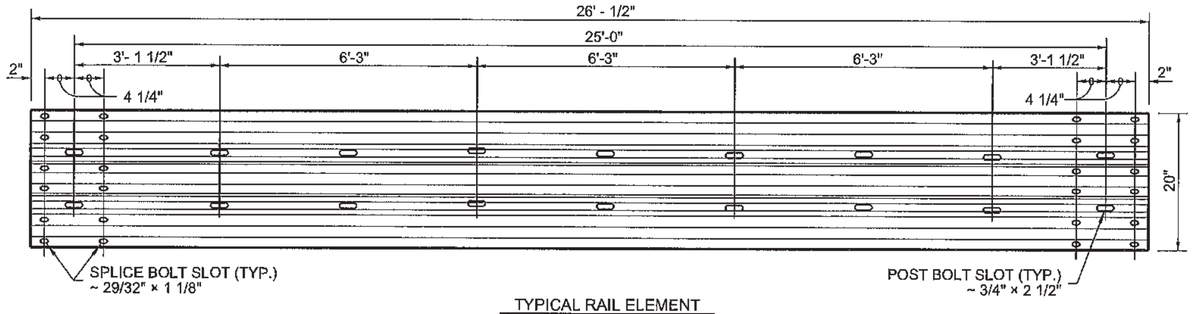

TYPICAL RAIL ELEMENT
25'-0" THRIE BEAM

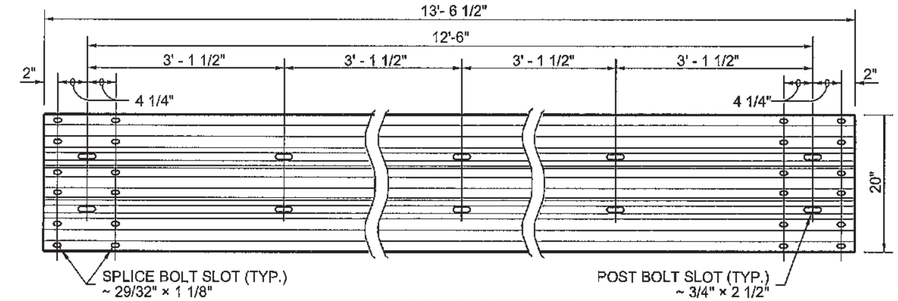

TYPICAL RAIL ELEMENT
12'-6" THRIE BEAM

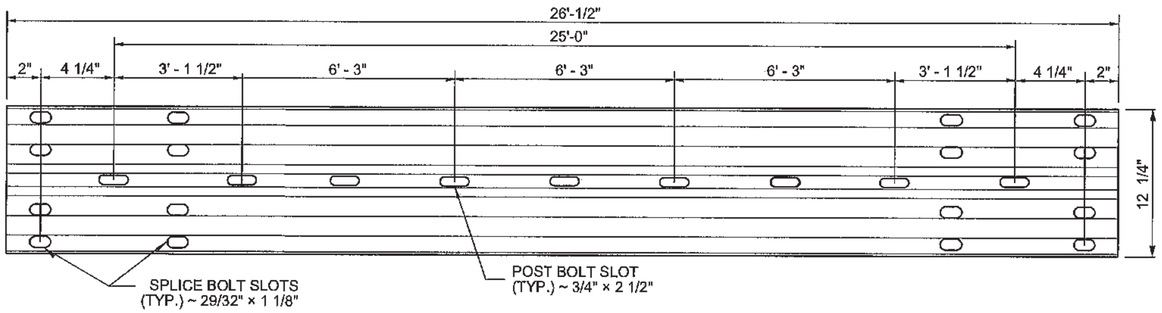

TYPICAL RAIL ELEMENT
25'-0" W-BEAM

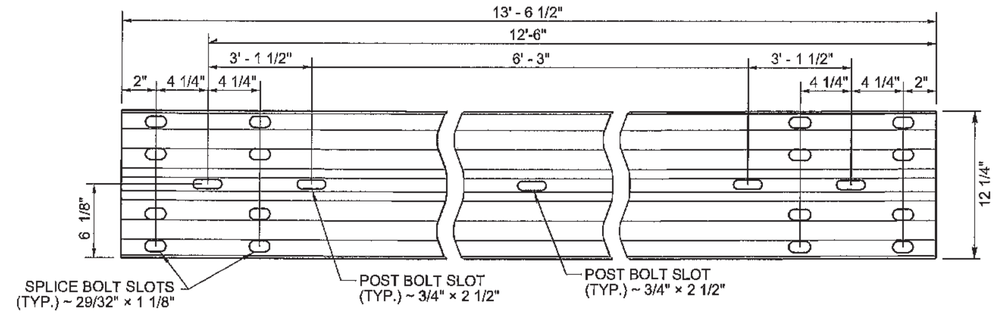

TYPICAL RAIL ELEMENT
12'-6" W-BEAM

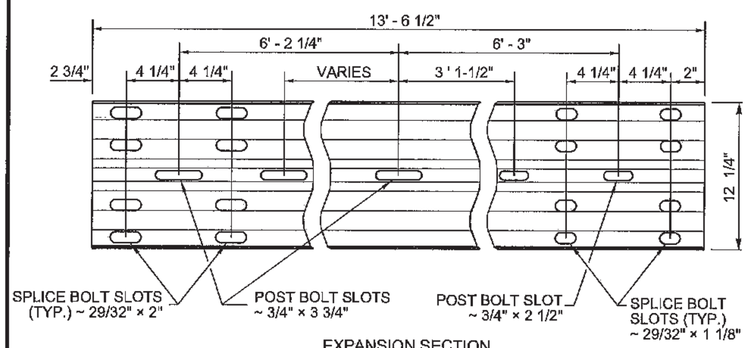

EXPANSION SECTION
W-BEAM

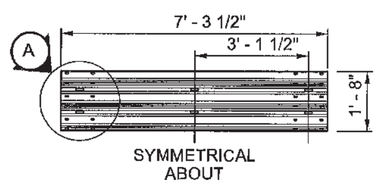

SHORT THRIE BEAM ELEMENT

LEFT
(MIRROR OF RIGHT)

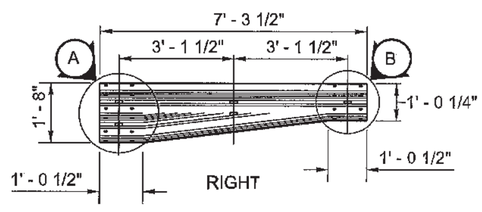

REDUCER ELEMENT
(PAID AS LIN. FT. OF THRIE BEAM)

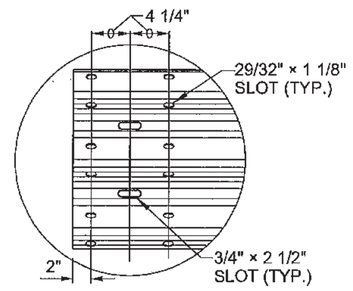

DETAIL (A)

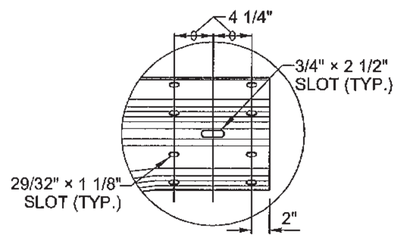

DETAIL (B)

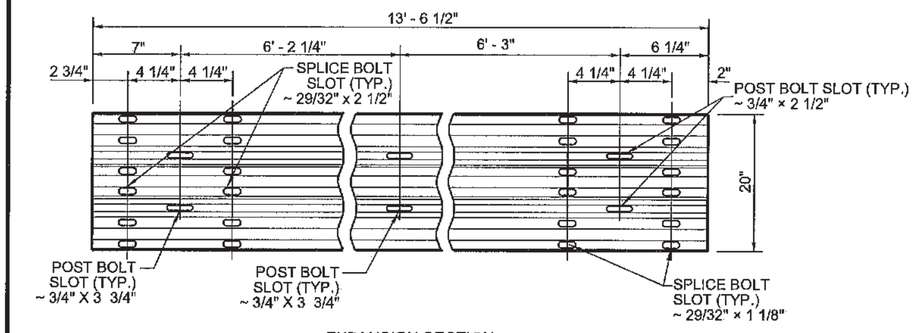

EXPANSION SECTION
THRIE BEAM

DRAWING SCALE = NOT TO SCALE

NO.	DATE	REV. BY	DESCRIPTION

REVISIONS (OR CHANGE NOTICES)

NEW MEXICO
DEPARTMENT OF TRANSPORTATION
STANDARD DRAWING

BEAM GUARDRAIL
ELEMENTS

APPROVED _____ DESIGN ENGINEER _____ DATE

SHEET 10-15

606-GR31- 3/20

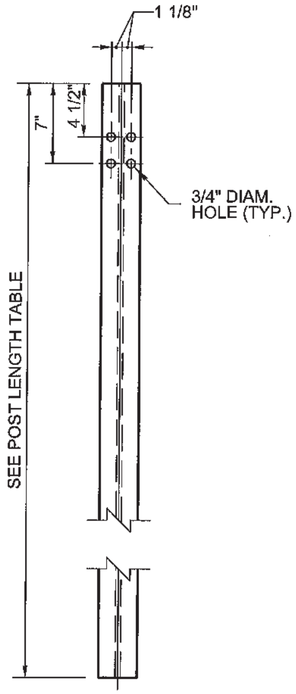

W-BEAM
(W6x8.5)

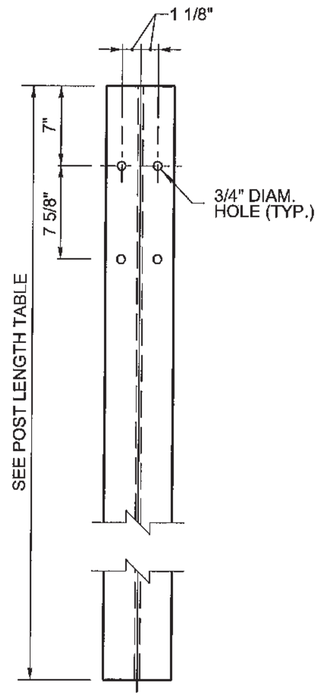

THRIE BEAM
(W6x15)

STEEL POST

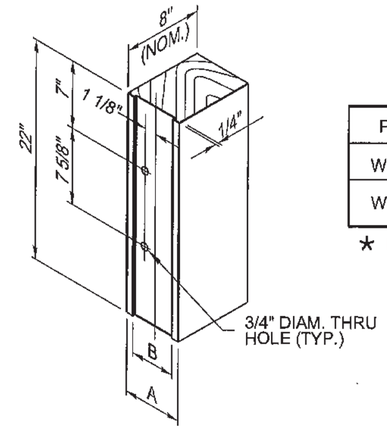

THRIE BEAM SPACER BLOCK
FOR STEEL POST

SEE NOTE

POST	A	B
W6 × 8.5	6"★	4 1/4"
W6 × 15	8"★	6 1/4"

★ NOMINAL (NOM.)

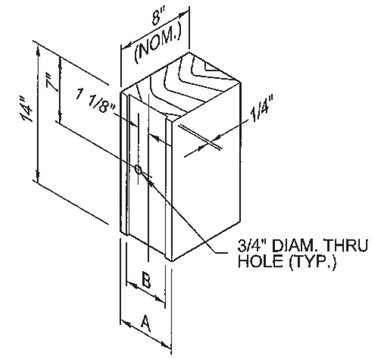

W-BEAM SPACER BLOCK
FOR STEEL POST

SEE NOTE

POST LENGTH TABLE	
DESCRIPTION	STEEL
SINGLE FACE W-BEAM	6' - 0"
DOUBLE FACE W-BEAM	6' - 0"
SINGLE FACE THRIE-BEAM	6' - 6"
DOUBLE FACE THRIE-BEAM	7' - 0"

NOTE:

SPACER BLOCKS MAY CONSIST OF WOOD, PLASTIC, OR COMPOSITE MATERIAL ON THE APPROVED PRODUCTS LIST.

AFSHIN JIAN
NEW MEXICO
16220
5-6-14
LICENSED PROFESSIONAL ENGINEER

SHEET 10-16
DRAWING SCALE = NOT TO SCALE

NO.	DATE	REV. BY	DESCRIPTION

REVISIONS (OR CHANGE NOTICES)

NEW MEXICO
DEPARTMENT OF TRANSPORTATION
STANDARD DRAWING

BEAM GUARDRAIL
POSTS AND BLOCKS

APPROVED _____ DESIGN ENGINEER _____ DATE

606-GR31-4/20

A = DEPTH OF SOIL OVER ROCK FORMATION

B = DEPTH OF EMBEDMENT INTO ROCK FORMATION

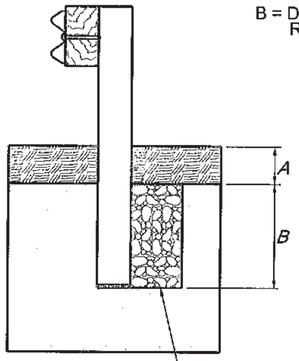

BACKFILL WITH CLEAN COARSE AGGREGATE WITH AN AVERAGE PARTICLE DIAMETER BETWEEN 1/4" AND 1/2". PLACE IN LAYERS AND TAMP.

FOR OVERLYING SOIL DEPTHS (A), RANGING FROM 0" TO 18", THE DEPTH INTO ROCK (B) IS EQUAL TO 24 IN.

CASE 1

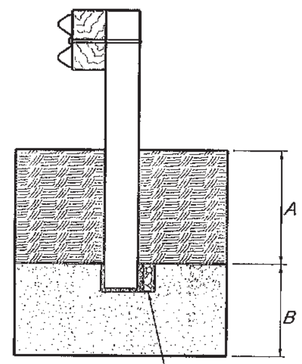

BACKFILL WITH CLEAN COARSE AGGREGATE WITH AN AVERAGE PARTICLE DIAMETER BETWEEN 1/4" AND 1/2". PLACE IN LAYERS AND TAMP.

FOR OVERLYING SOIL DEPTHS (A), RANGING FROM 18" TO FULL POST EMBEDMENT DEPTH, THE REQUIRED DEPTH INTO ROCK (B) IS EQUAL TO FULL POST EMBEDMENT DEPTH MINUS (A). FULL POST EMBEDMENT FOR W-BEAM IS ABOUT 41 IN.

CASE 2

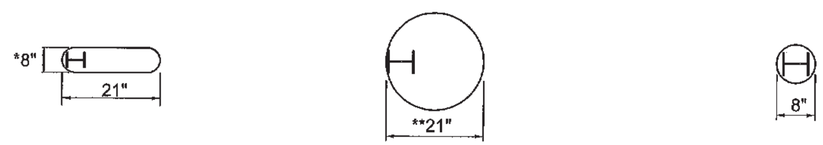

* THIS WIDTH MAY BE INCREASED TO 15" TO ACCOMMODATE CONSTRUCTION TOLERANCES.

** 2' DIAMETER HOLE MAY BE USED.

PLAN VIEW STEEL POSTS

EITHER HOLE CONFIGURATION ACCEPTABLE

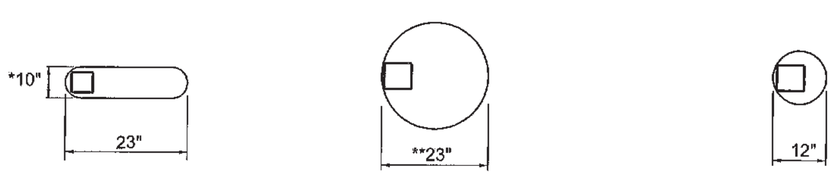

* THIS WIDTH MAY BE INCREASED TO 15" TO ACCOMMODATE CONSTRUCTION TOLERANCES.

** 2' DIAMETER HOLE MAY BE USED.

PLAN VIEW WOOD POSTS

EITHER HOLE CONFIGURATION ACCEPTABLE

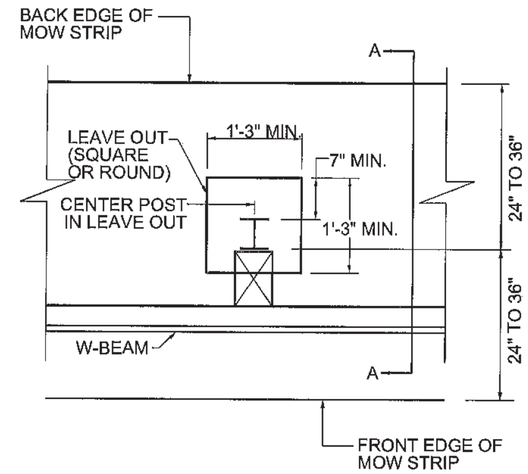

STEEL POST DETAIL

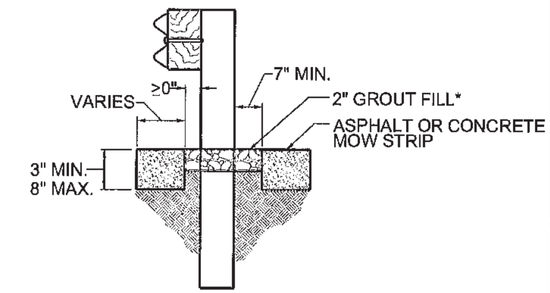

*GROUT MATERIAL HAS A 28-DAY COMPRESSIVE STRENGTH OF 120 PSI OR LESS.

SECTION A-A

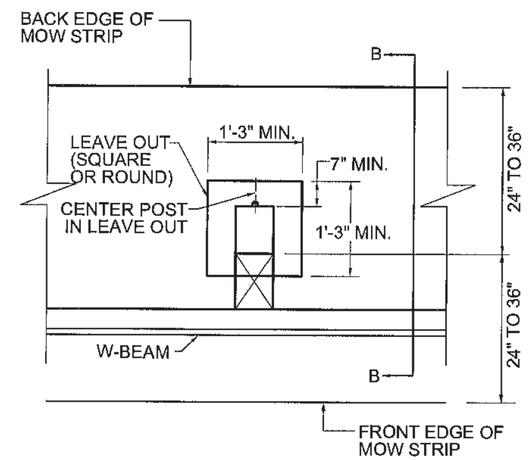

WOOD POST DETAIL

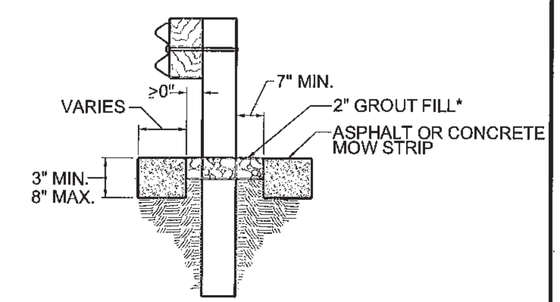

*GROUT MATERIAL HAS A 28-DAY COMPRESSIVE STRENGTH OF 120 PSI OR LESS.

SECTION B-B

NOTE:

1. POST LEAVEOUT SHALL BE OBSERVED WHEN POSTS ARE RESTRAINED BY ROCK, ASPHALT, OR CONCRETE. LEAVEOUT IS REQUIRED BY FHWA MEMO B64-B, (SEE FHWA WEBSITE). GUARDRAIL POST LEAVEOUT ALLOWS POSTS TO ROTATE IN THEIR EMBEDMENT SUCH THAT VEHICLE IMPACT LOADS ARE DISTRIBUTED THROUGH THE POST INTO THE EMBEDMENT MATERIAL PRIOR TO THE POST BREAKING PREMATURELY.
2. MOW STRIP MAY BE USED FOR VEGETATION CONTROL. WHERE PAVED SHOULDER IS CONSTRUCTED WITHIN 24" IN FRONT OF POST, CONSTRUCT MOW STRIP TO EDGE OF PAVED SHOULDER.
3. MOW STRIP MATERIAL SHALL BE EITHER ASPHALTIC PAVEMENT OR REINFORCED CONCRETE (WIRE MESH OR SYNTHETIC FIBER). MINIMUM THICKNESS IS 3 INCHES.
4. CONSTRUCTION OF LEAVEOUTS AND MOW STRIPS SHALL BE CONSIDERED INCIDENTAL TO THE GUARDRAIL.

NO.	DATE	REV. BY	DESCRIPTION

REVISIONS (OR CHANGE NOTICES)

NEW MEXICO
DEPARTMENT OF TRANSPORTATION
STANDARD DRAWING

GUARDRAIL POST DETAILS
IN ROCK FORMATION &
IN MOW STRIP APPLICATION

APPROVED _____ DESIGN ENGINEER _____ DATE

SHEET 10-17
DRAWING SCALE = NOT TO SCALE

606-GR31-5/20

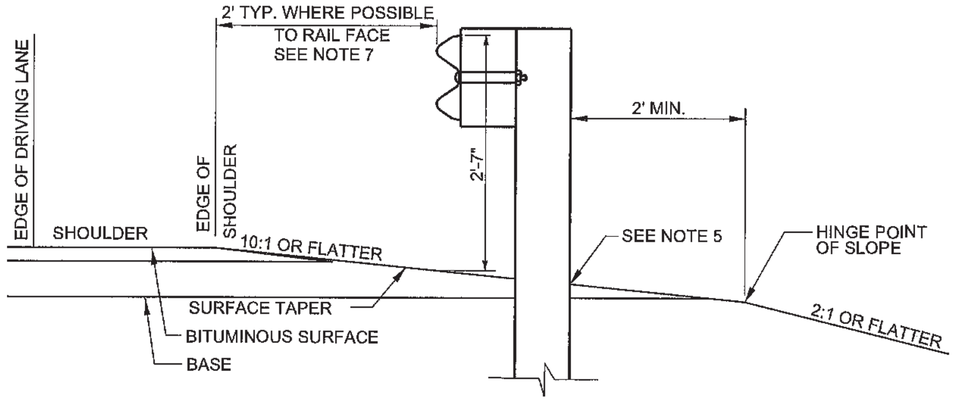

W-BEAM GUARDRAIL STANDARD
INSTALLATION AND SURFACING DETAILS

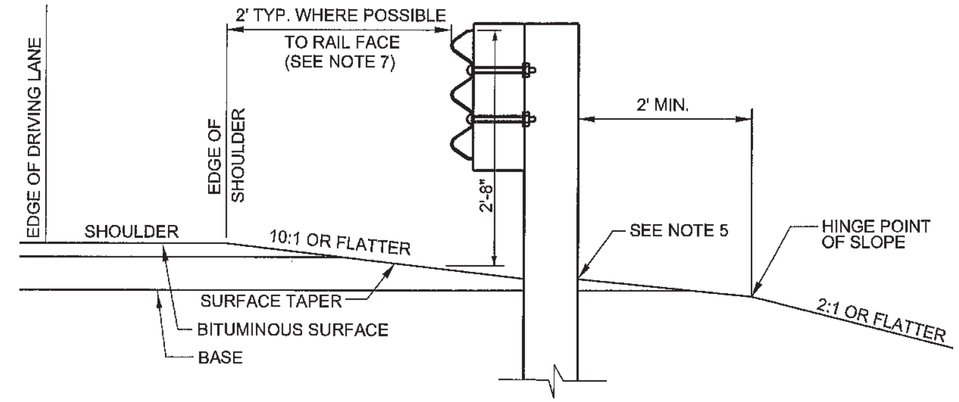

THRIE BEAM GUARDRAIL STANDARD
INSTALLATION AND SURFACING DETAILS

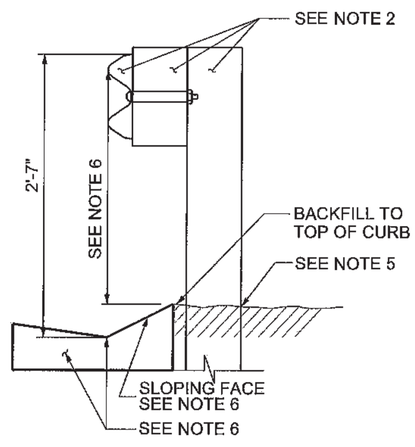

W-BEAM GUARDRAIL
AT FACE OF CURB
ALL DESIGN SPEEDS

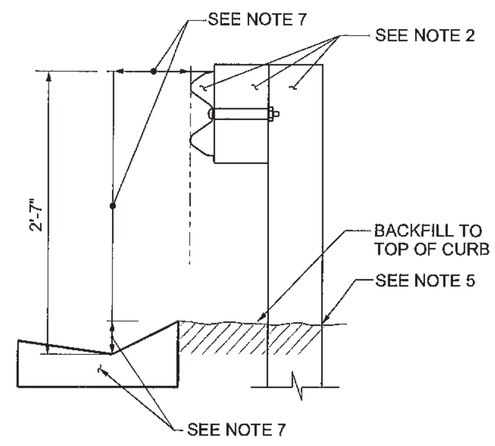

W-BEAM GUARDRAIL
AWAY FROM CURB FACE
DESIGN SPEEDS LESS THAN
45 MPH AND 45 TO 50 MPH

NOTES

1. STANDARD BEAM GUARDRAIL POST SPACING FOR SINGLE AND DOUBLE FACE W-BEAM AND THRIE BEAM SHALL BE 6'-3" ON CENTER.
2. FOR POST AND BLOCK DETAILS, SEE SHEET 606-GR31-4/20.
3. CONSTRUCTION TOLERANCE SHALL BE ± 1/2" FOR GUARDRAIL HEIGHT.
4. GUARDRAIL FACE MAY BE PLACED AT EDGE OF SHOULDER WHEN SLOPES BEHIND GUARDRAIL WILL NOT ALLOW FOR 2' TYPICAL SETBACK WHILE MAINTAINING THE MINIMUM 2' DISTANCE FROM THE SLOPE HINGE POINT.
5. POST LEAVE OUT SHALL BE OBSERVED WHEN POSTS ARE RESTRAINED BY ROCK, ASPHALT OR CONCRETE. SEE SHEET 606-GR31-5/20.
6. SINGLE FACE GUARDRAIL CAN BE USED WITH ANY COMBINATION OF SLOPING FACED CURB THAT IS 6" OR SHORTER IF INSTALLED FLUSH WITH THE FACE OF THE GUARDRAIL ON ROADS WITH DESIGN SPEEDS UP TO 50 MPH. FOR DESIGN SPEEDS FROM 50 MPH TO 60 MPH A 4" OR SHORTER SLOPING CURB IS RECOMMENDED FOR INSTALLATION WHERE THE FACE OF THE CURB IS FLUSH WITH THE FACE OF THE GUARDRAIL. FOR DESIGN SPEEDS ABOVE 60 MPH THE SLOPING FACE OF THE CURB SHALL BE 1V:3H OR FLATTER AND NO TALLER THAN 4" HIGH. THE GUTTER LINE OF THE CURB SHALL BE CONSIDERED TO BE THE SAME LOCATION AS THE FACE OF THE CURB AND SHALL ALSO BE THE LOCATION FROM WHERE GUARDRAIL HEIGHT IS MEASURED.
7. SINGLE FACE GUARDRAIL MAY BE USED WITH 6" HIGH OR SHORTER SLOPING FACED CURB AS LONG AS THE FACE OF THE GUARDRAIL IS LOCATED AT LEAST 8 FT. BEHIND THE FACE OF THE CURB ON ROADS WHERE THE DESIGN SPEED IS UP TO 45 MPH. FOR DESIGN SPEEDS FROM 45 TO 50 MPH GUARDRAILS MAY BE USED WITH 4" HIGH OR SHORTER SLOPING CURBS AS LONG AS THE FACE OF THE METAL BARRIER IS LOCATED AT LEAST 13 FT. BEHIND THE CURB. THE GUTTER LINE OF THE CURB SHALL BE WHERE OFFSET TO RAIL FACE AND RAIL HEIGHT IS MEASURED.

AFSHIN JIAN
NEW MEXICO
16226
5-6-14
LICENSED PROFESSIONAL ENGINEER

NO.	DATE	REV. BY	DESCRIPTION

REVISIONS (OR CHANGE NOTICES)

NEW MEXICO
DEPARTMENT OF TRANSPORTATION
STANDARD DRAWING

TYPICAL
INSTALLATION AND SURFACING
DETAILS

APPROVED _____ DESIGN ENGINEER _____ DATE

SHEET 10-18
DRAWING SCALE = NOT TO SCALE

606-GR31- 6/20

NOTES:

1. END TREATMENT SHOWN IS A GENERAL DEPICTION OF A NOMINAL 37'-6" NMDOT ACCEPTED END TERMINAL THAT IS FHWA ACCEPTED AS CRASHWORTHY AT TEST LEVEL 2 (TL-2) AND MAY BE USED IN APPLICATIONS WITH SPEEDS OF 40 MPH OR LESS.
2. ACCEPTED END TREATMENT, ON THE DEPARTMENT'S APPROVED PRODUCT LIST, SHALL BE INSTALLED ACCORDING TO MANUFACTURERS' INSTALLATION INSTRUCTIONS.
3. A REFLECTORIZED OBJECT MARKER SHALL BE INSTALLED. ADHESIVE BACKED REFLECTIVE SHEETING MAY BE APPLIED DIRECTLY TO GUARDRAIL END TREATMENT IMPACT HEAD AS PER THE MANUFACTURERS RECOMMENDATION. DIRECT APPLIED SHEETING SHALL PROVIDE A SMOOTH SURFACE AND HAVE NO WRINKLES, AIR BUBBLES, CUTS OR TEARS. REFLECTIVE MATERIAL SHALL BE TYPE VIII OR BETTER WITH YELLOW BACK GROUND AND BLACK CHEVRON STRIPES. STRIPES SHALL BE ORIENTED WITH THEIR TOPS AWAY FROM TRAFFIC AND ANGLED DOWN AT 45° TOWARDS TRAFFIC.
4. THESE END TREATMENTS DO NOT REQUIRE AN OFFSET AT THE END. END TREATMENTS SHALL BE INSTALLED ENSURING THE END PIECE IS 2' OFF THE SHOULDER. A MAXIMUM FLARE OF 25:1 OR FLATTER OVER THE LENGTH OF THE TREATMENT IS ALLOWED.
5. END TREATMENTS SHALL BE OF THE LENGTH AND TEST LEVEL SPECIFIED IN THESE DRAWINGS AND AS SPECIFIED BY THE MANUFACTURER FOR THE INTENDED END TREATMENT TYPE TEST LEVEL. ONLY END TREATMENTS CURRENTLY ON THE NMDOT APPROVED PRODUCTS LIST WILL BE ACCEPTED FOR INSTALLATION. FOR SPECIFIC END TREATMENT DETAILS, SEE MANUFACTURERS' DRAWINGS.
6. SHOP DRAWINGS AND MANUFACTURERS' INSTALLATION INSTRUCTIONS SHALL BE SUBMITTED BY THE CONTRACTOR TO THE PROJECT MANAGER A MINIMUM OF FIVE DAYS PRIOR TO INSTALLATION TO ENSURE THAT THE COMPONENTS DELIVERED AND INSTALLED BY THE CONTRACTOR ARE IN ACCORDANCE WITH THE MANUFACTURER'S DRAWINGS, SPECIFICATIONS, AND INSTALLATION INSTRUCTIONS.
7. WARP ALL GRADE TRANSITIONS TO CREATE SMOOTH SURFACE CONTOURS.

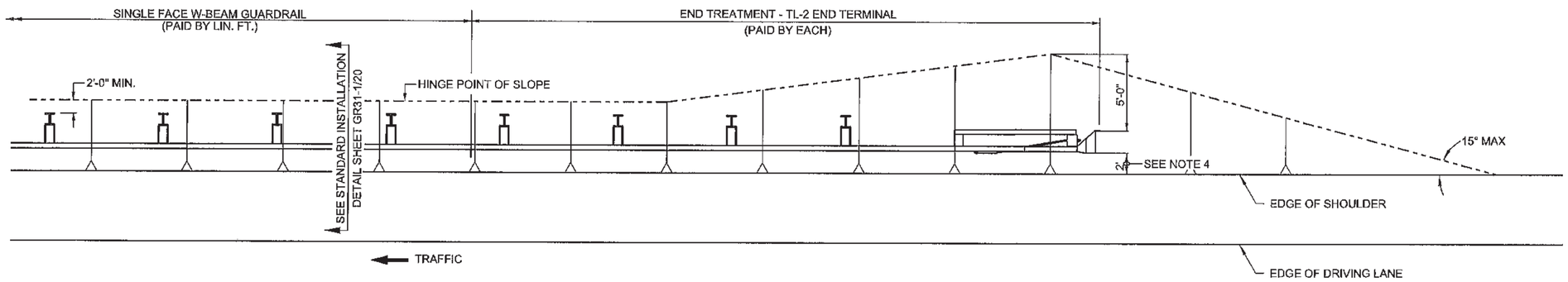

PLAN VIEW

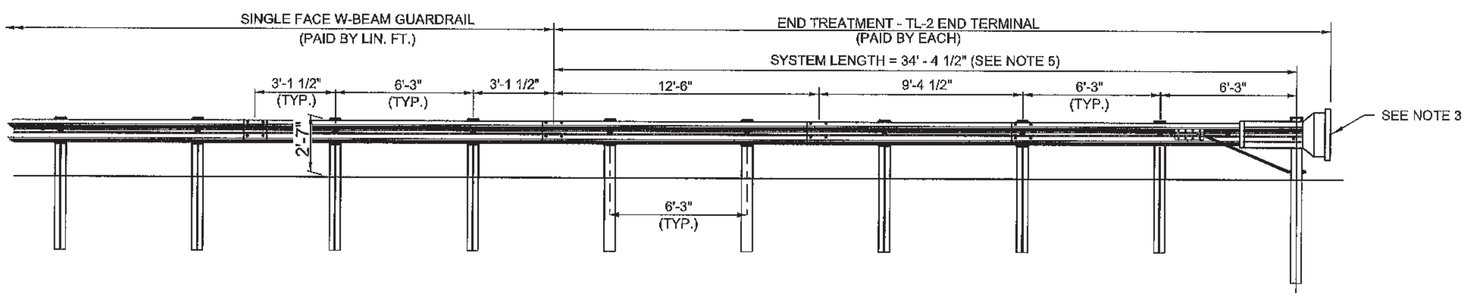

ELEVATION VIEW

NO.	DATE	REV. BY	DESCRIPTION

REVISIONS (OR CHANGE NOTICES)

NEW MEXICO
DEPARTMENT OF TRANSPORTATION
STANDARD DRAWING

END TREATMENT
TL-2 END TERMINAL

APPROVED _____ DESIGN ENGINEER _____ DATE

SHEET 10-19
DRAWING SCALE = NOT TO SCALE

606-GR31-8/20

NOTES:

1. FOR USE ON THE DOWNSTREAM END OF GUARDRAIL RUNS, WHEN A CRASHWORTHY TL-3 OR TL-2 END TERMINAL IS NOT REQUIRED.
2. ACCEPTED SYSTEMS ON THE DEPARTMENT'S APPROVED PRODUCTS LIST SHALL BE INSTALLED ACCORDING TO MANUFACTURERS' INSTALLATION INSTRUCTIONS.
3. SHOP DRAWINGS AND MANUFACTURER'S INSTALLATION INSTRUCTIONS SHALL BE SUBMITTED BY THE CONTRACTOR TO THE PROJECT ENGINEER A MINIMUM OF FIVE DAYS PRIOR TO INSTALLATION.
4. FOR ADDITIONAL DETAILS NOT SHOWN, SEE SHEET 606-GR31-11/20 AND SHEET 606-GR31-12/20.

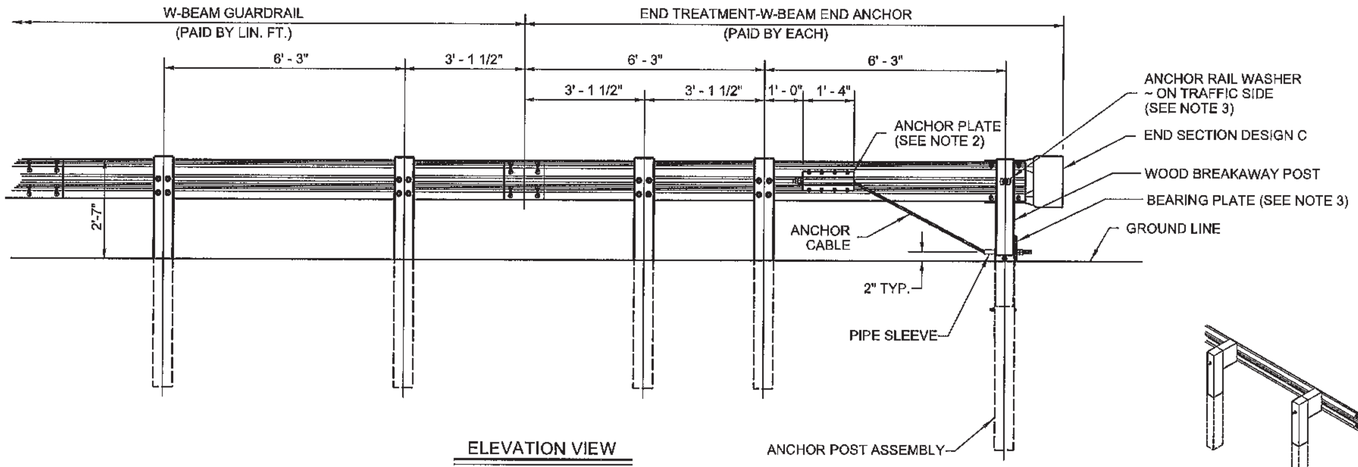

ELEVATION VIEW

END TREATMENT
W-BEAM END ANCHOR
PAID AS EACH

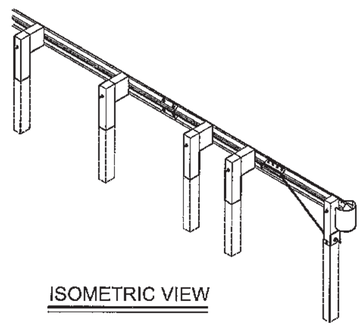

ISOMETRIC VIEW

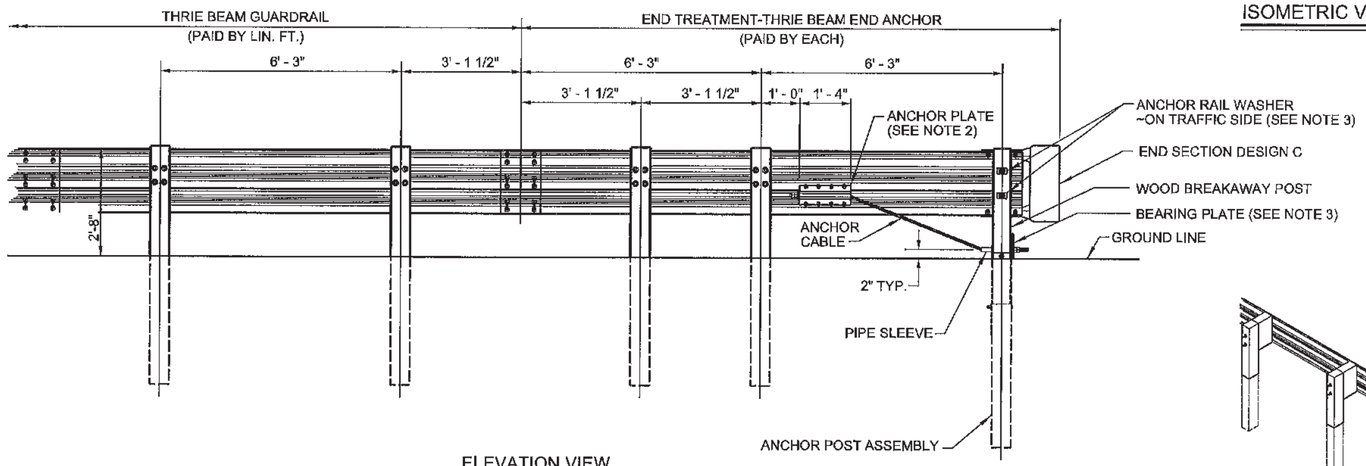

ELEVATION VIEW

END TREATMENT
THRIE BEAM END ANCHOR
PAID AS EACH

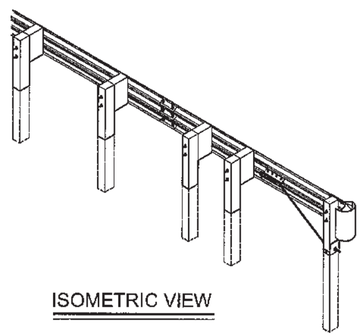

ISOMETRIC VIEW

AFSHIN JIAN
NEW MEXICO
16226
5-6-14
LICENSED PROFESSIONAL ENGINEER

NO.	DATE	REV. BY	DESCRIPTION

REVISIONS (OR CHANGE NOTICES)

NEW MEXICO
DEPARTMENT OF TRANSPORTATION
STANDARD DRAWING

END TREATMENT
W-BEAM END ANCHOR
& THRIE BEAM END ANCHOR

APPROVED _____ DESIGN ENGINEER _____ DATE

SHEET 10-20
DRAWING SCALE = NOT TO SCALE

606-GR31-9/20

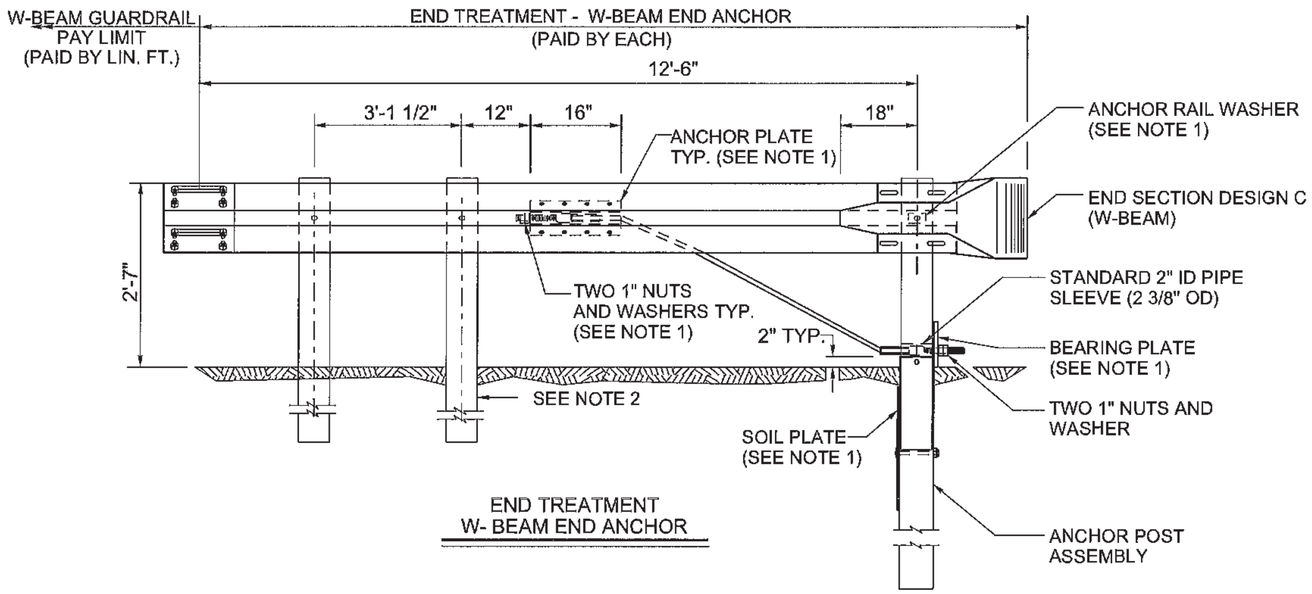

END TREATMENT
W- BEAM END ANCHOR

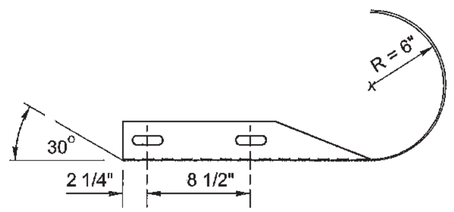

PLAN
DESIGN C

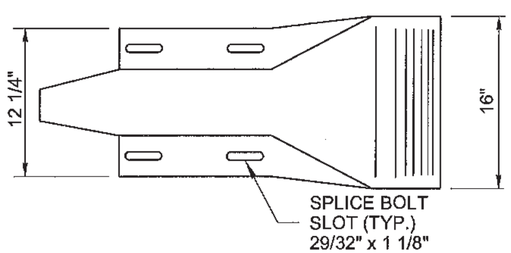

ELEVATION
DESIGN C

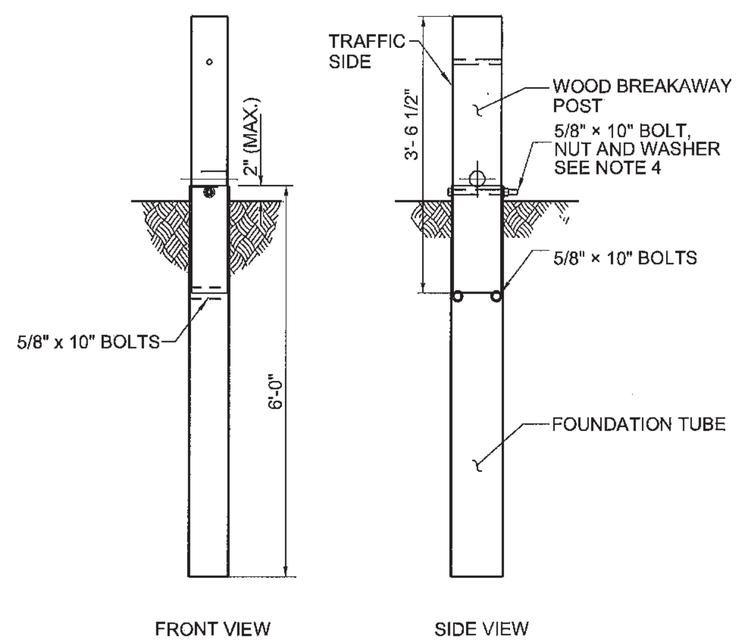

ANCHOR POST ASSEMBLY

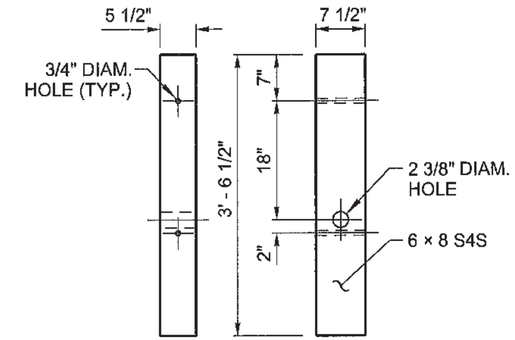

W-BEAM
WOOD BREAKAWAY POST

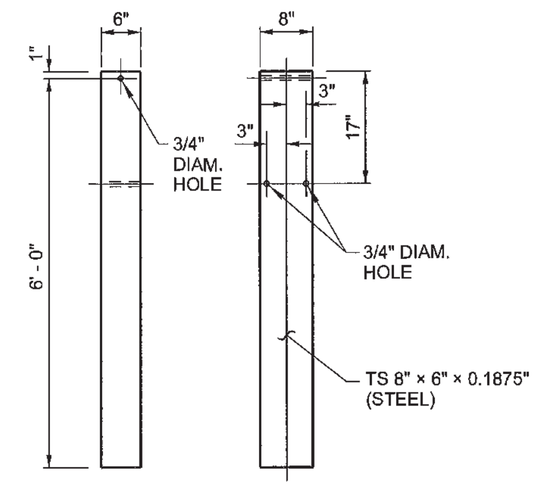

FOUNDATION TUBE

NOTES:

1. FOR DETAILS NOT SHOWN, SEE SHEET 606-GR31-13/20.
2. POST AND BLOCK SHALL MATCH BEAM GUARDRAIL POSTS.
3. THE WOOD, BREAKAWAY POSTS SHALL BE S4S TIMBER WITH A STRESS GRADE MARKED OR CERTIFIED BY A RECOGNIZED ASSOCIATION OR AGENCY WHICH IS CERTIFIED BY THE BOARD OF REVIEW. AMERICAN LUMBER STANDARDS COMMITTEE TO GRADE THE SPECIES. WOOD PRESERVATIVES SHALL COMPLY TO THE REQUIREMENTS OF AASHTO DESIGNATION M133.
4. BOLT SHALL BE INSTALLED FROM THE EMBANKMENT SIDE.

AFSHIN JIAN
NEW MEXICO
16226
5-6-14
LICENSED PROFESSIONAL ENGINEER

NO.	DATE	REV. BY	DESCRIPTION

REVISIONS (OR CHANGE NOTICES)

NEW MEXICO
DEPARTMENT OF TRANSPORTATION
STANDARD DRAWING

END TREATMENT
W-BEAM END ANCHOR DETAILS

APPROVED _____ DESIGN ENGINEER _____ DATE

SHEET 10-21
DRAWING SCALE = NOT TO SCALE

606-GR31-11/20

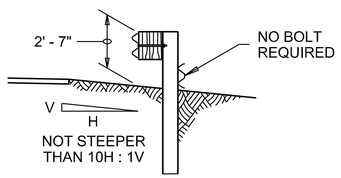

SECTION A

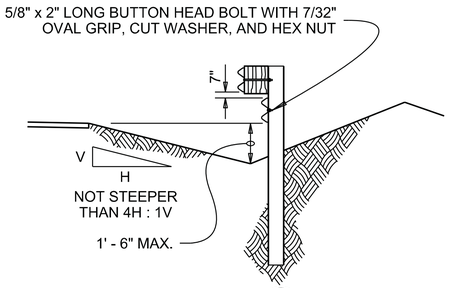

SECTION B

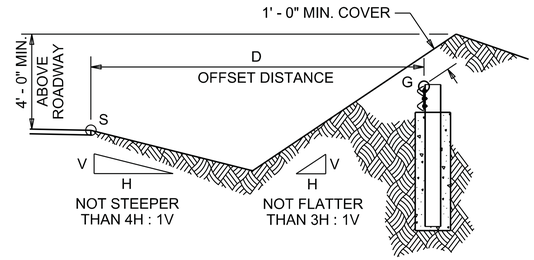

SECTION C

SEE NOTE 3

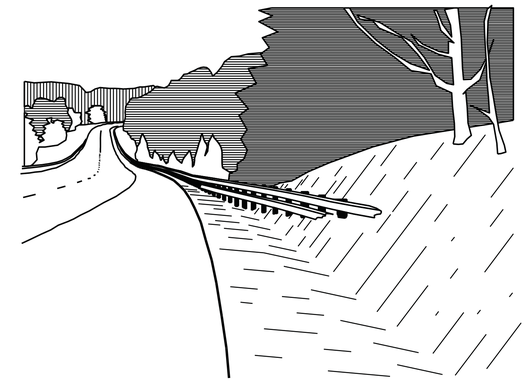

PERSPECTIVE

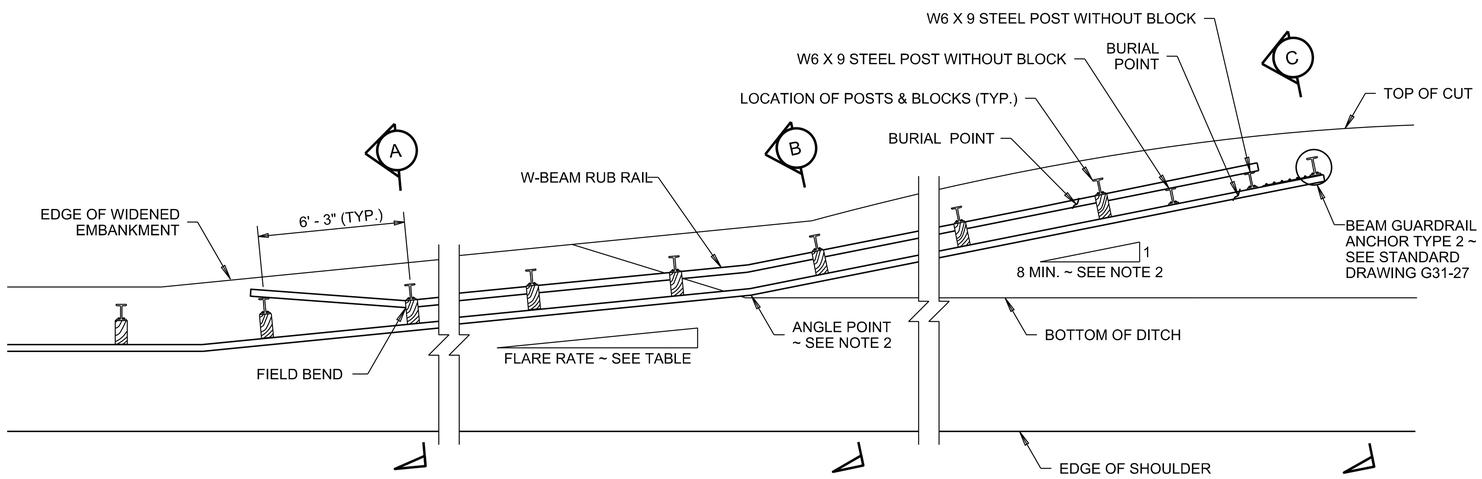

PLAN

NOTES:

1. POSTS INSTALLED ON SHOULDER SLOPES STEEPER THAN 10H : 1V SHALL BE 8' LONG.

2. THE FLARE RATE OF THE GUARDRAIL MAY BE INCREASED AFTER CROSSING THE DITCH BOTTOM TO SHORTEN THE LENGTH OF THE TERMINAL.

3. DETERMINE THE HEIGHT OF THE W-BEAM AT THE ANCHOR (**G**) BY FIRST CALCULATING THE PERPENDICULAR OFFSET DISTANCE (**D**) FROM THE EDGE OF SHOULDER (**S**) TO THE ANCHOR (ON STATION). MULTIPLY THAT DISTANCE BY 0.1, THEN SUBTRACT THE PRODUCT FROM THE ELEVATION OF THE SAME POINT (**S**) ON THE EDGE OF SHOULDER USED TO OBTAIN THE OFFSET DISTANCE (AT THE SAME STATION). ADD BEAM GUARDRAIL DESIGN HEIGHT (31") TO THAT REMAINDER FOR A SUM THAT EQUALS THE ELEVATION OF THE TOP OF THE W-BEAM AT THE ANCHOR.

   REFER TO SECTION "C":

   $$\text{ELEVATION}_{G} = (\text{ELEVATION}_{S} - (0.1)) + 27$$

4. THIS DETAIL REPLACES OLD TERMINAL TYPE D.

FLARE RATE TABLE	
RATE	**POSTED SPEED** (mph)
15 : 1	70
14 : 1	60
12 : 1	55
11 : 1	50
10 : 1	45
9 : 1	40 OR LESS

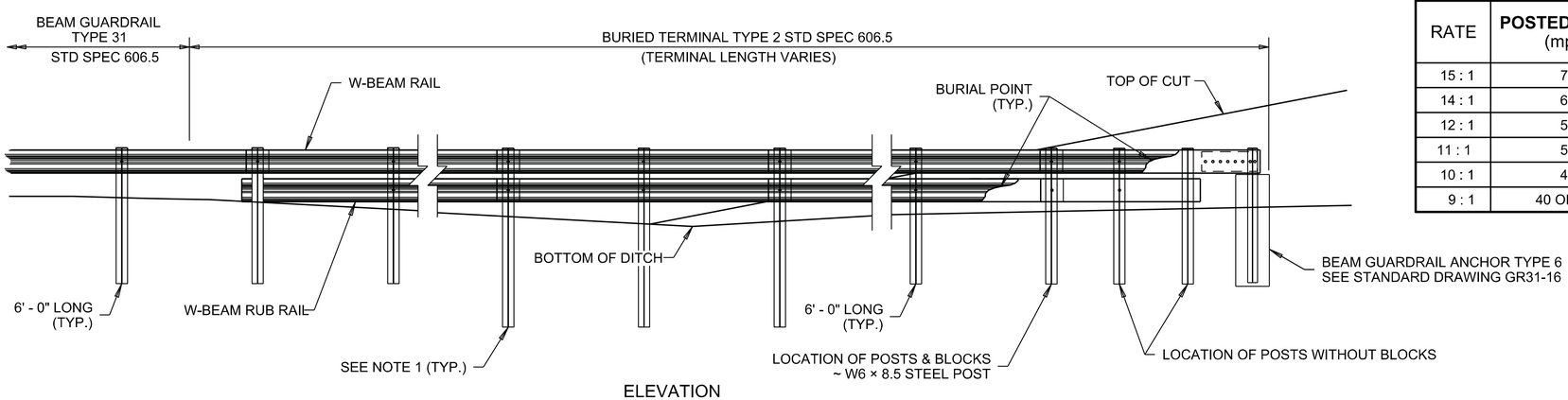

ELEVATION
(PROFILE ALONG RAIL)

NO.	DESCRIPTION	DATE	BY
6			
5			
4			
3			
2			
1			

REVISIONS (OR CHANGE NOTICES)

NEW MEXICO DEPARTMENT OF TRANSPORTATION

BEAM GUARDRAIL
BURIED TERMINAL TYPE 6

GR31- 13

SHEET 10-22

DRAWING SCALE: 1: scale

NOTES

1. RAIL SECTION AND W8 X 18 STEEL POST SHALL BE FABRICATED TO RECEIVE 5/8" HEX HEAD BOLTS AS SHOWN.
2. ALL BOLTS SHALL BE HIGH STRENGTH 5/8" HEX HEAD BOLTS WITH ANCHOR RAIL WASHERS.

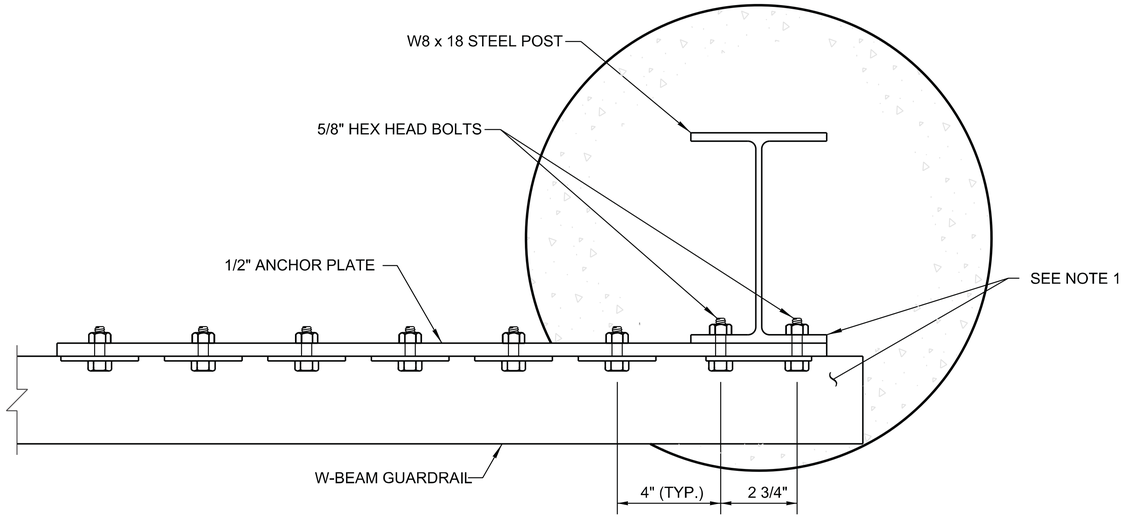

PLAN

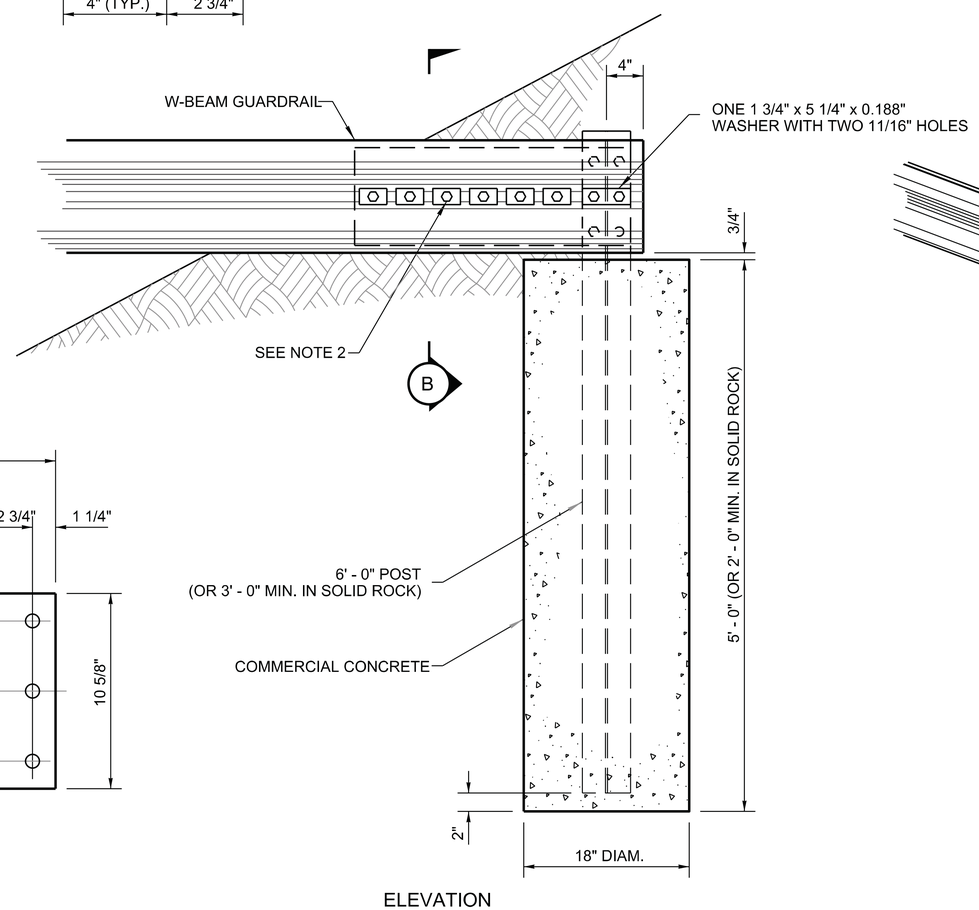

ELEVATION

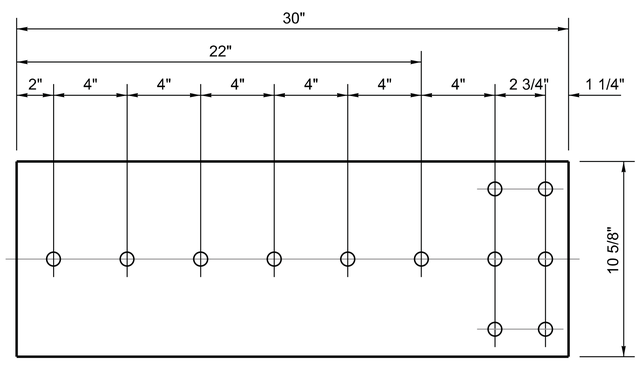

BACKING PLATE

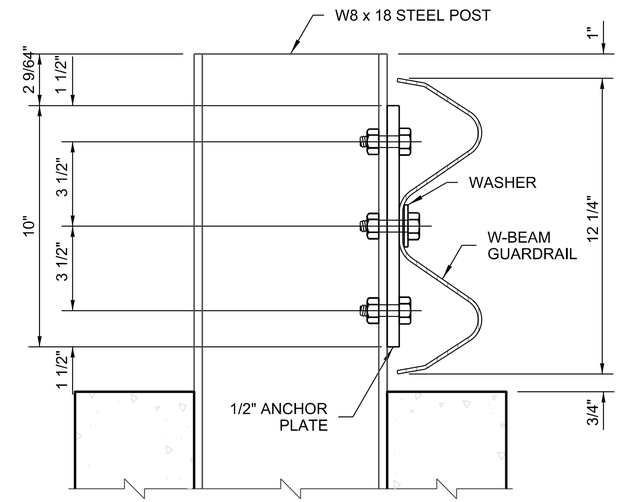

SECTION B

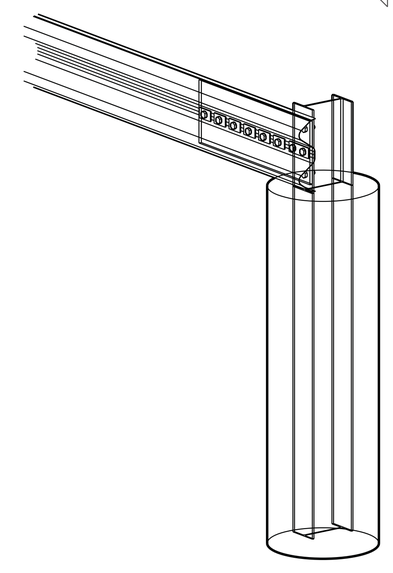

ISOMETRIC

NO.	DESCRIPTION	DATE	BY
6			
5			
4			
3			
2			
1			

REVISIONS (OR CHANGE NOTICES)

NEW MEXICO DEPARTMENT
OF TRANSPORTATION

BEAM GUARDRAIL ANCHOR
TYPE 6

GR31- 16

SHEET 10-23

DRAWING SCALE: 1: scale

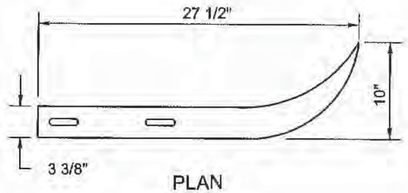

PLAN

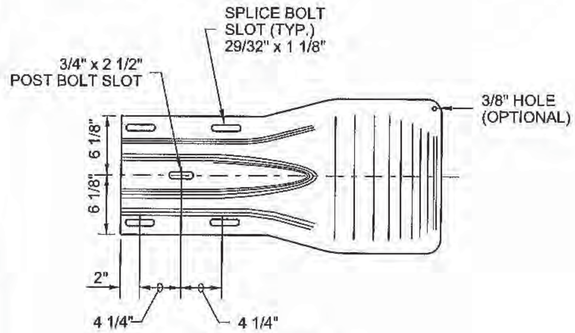

ELEVATION

DESIGN A

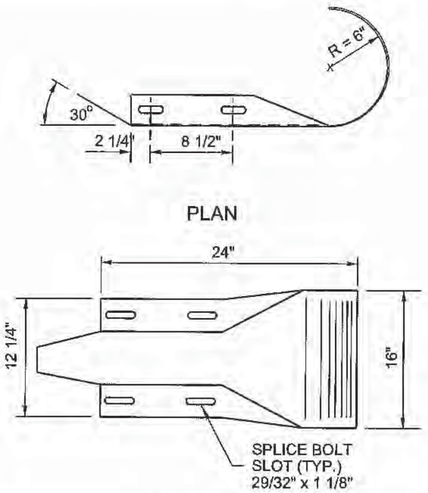

PLAN

ELEVATION

DESIGN C

NOTES:

1. END SECTION DESIGN C SHALL BE USED EXCEPT WHERE NOTED ON THE PLANS OR CONTRACT.
2. ATTACH GUARDRAIL TO BRIDGE RAIL OR CONCRETE BARRIER WITH 7/8" DIAMETER BOLTS (FIVE MINIMUM) WITH THIN SLAB FERRULE INSERTS OR RESIN BONDED ANCHORS. SEE THE CONTRACT PLANS.
3. A SINGLE PIECE HAVING SIMILAR DIMENSIONAL SHAPE TO DESIGN G AND MATING WITH THE W-BEAM GUARDRAIL IS AN ACCEPTABLE ALTERNATE.
4. IN CASES WHERE DESIGN "F" END SECTION IS LAPPED ON THE OUTSIDE OF THE GUARDRAIL, A GALVANIZED 1" ID, 2" OD, 0.134" THICK, NARROW TYPE A PLAIN WASHER OR AN ANCHOR RAIL WASHER SHALL BE PLACED UNDER THE SPLICE BOLT HEADS.

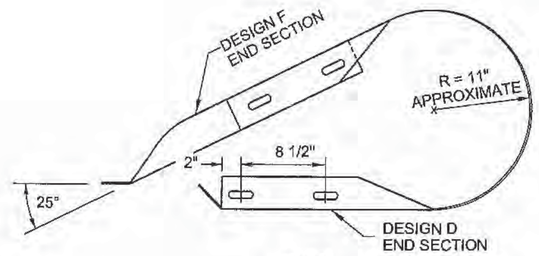

PLAN

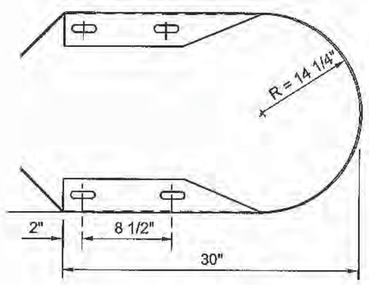

PLAN

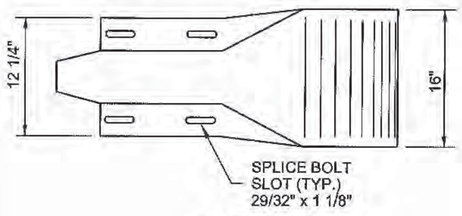

ELEVATION

DESIGN D

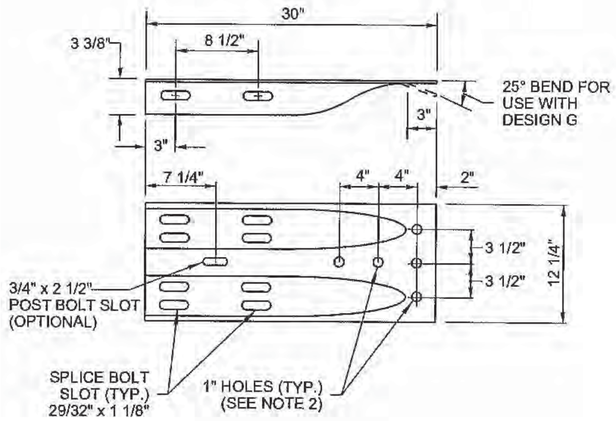

ELEVATION

DESIGN F

(SEE NOTE 4)

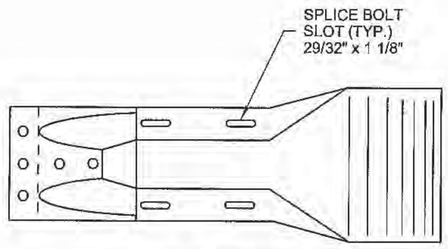

ELEVATION

DESIGN G

(SEE NOTE 3)

NO.	DATE	REV. BY	DESCRIPTION

REVISIONS (OR CHANGE NOTICES)

NEW MEXICO
DEPARTMENT OF TRANSPORTATION
STANDARD DRAWING

W-BEAM GUARDRAIL
END SECTIONS

APPROVED _____ DESIGN ENGINEER _____ DATE

SHEET 10-24

DRAWING SCALE = NOT TO SCALE

606-GR31-20/20