SANTA FE COUNTY

RANCHO VIEJO FIRE STATION
GENERATOR INSTALLATION
IFB
MARCH 28, 2016

VICINITY MAP

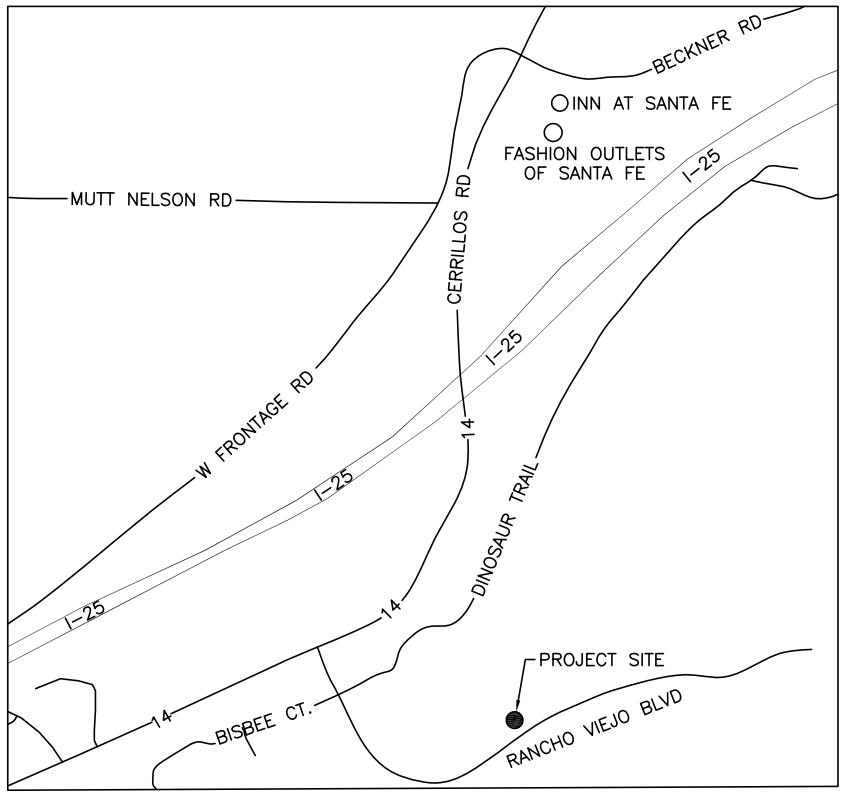

NORTH

Location Map

GENERAL ELECTRICAL NOTES

1. WORK COVERED BY THESE DRAWINGS CONSISTS OF FURNISHING ALL LABOR, EQUIPMENT, SUPPLIES AND MATERIALS, AND PERFORMING ALL OPERATIONS, INCLUDING CUTTING, CHANNELING, AND UNDERGROUND SYSTEMS AS INDICATED.
2. ALL ELECTRICAL WORK SHALL BE PERFORMED IN A NEAT AND WORKMAN LIKE MANNER IN FULL ACCORDANCE WITH NATIONAL ELECTRICAL CODE (NEC), NATIONAL ELECTRIC SAFETY CODE (NESC), AND LOCAL AND STATE SAFETY CODES.
3. CONTRACTOR SHALL BE RESPONSIBLE FOR FINAL COORDINATION WITH UTILITY COMPANIES. VERIFY EXACT REQUIREMENTS PRIOR TO ROUGH–IN. THERE SHALL BE NO EXTRA COSTS TO THE OWNER FOR CONTRACTOR'S FAILURE TO COORDINATE UTILITY REQUIREMENTS.
4. SHOULD THE CONTRACTOR DETECT ANY DISCREPANCIES BETWEEN CONTRACT DOCUMENTS AND LEGAL OR SAFETY REQUIREMENTS FOR THE PROJECT, HE SHALL PROMPTLY NOTIFY THE ENGINEER IN WRITING. ONCE NOTIFIED, THE ENGINEER SHALL MODIFY THE CONTRACT DOCUMENTS ACCORDINGLY. IF THE CONTRACTOR PROCEEDS WITH ANY WORK WHICH IS IN VARIANCE OF KNOWN LEGAL OR SAFETY REQUIREMENTS, THE CONTRACTOR SHALL ASSUME RESPONSIBILITY FOR THIS WORK AND SHALL PROMPTLY CORRECT THE WORK WHEN NOTIFIED WITHOUT ADDITIONAL COST TO THE OWNER.
5. ALL WIRE AND CABLE SHALL BE INSTALLED IN APPROVED RACEWAY. UNLESS OTHERWISE SPECIFIED, RACEWAY SHALL BE EMT CONDUIT, 1/2 INCH.
6. ALL RACEWAY SHALL BE RUN CONCEALED UNLESS OTHERWISE NOTED OR PRIOR APPROVED BY THE ENGINEER.
7. ALL WIRING SHALL BE COPPER, THHN/THWN INSULATION. MINIMUM CONDUCTOR SIZE SHALL BE #12.
8. EXTERIOR WIRING AND DEVICES SHALL BE INSTALLED IN CONDUIT WITH WEATHER–TIGHT FITTINGS AND IN WEATHER–TIGHT BOXES.
9. ALL METALLIC RACEWAY IN CONTACT WITH EARTH SHALL BE COATED. PROVIDE EITHER PLASTIBOND OR 2 LAYERS SCOTCH #51 HALF–LAPPED.

LIST OF DRAWINGS

E - 0 TITLE SHEET
E - 1 ELECTRICAL SITE PLAN
E - 2 ELECTRICAL RISER DIAGRAM
E - 3 GENERATOR FOUNDATION DETAILS

SCOPE OF WORK

1. FURNISH AND INSTALL 250KW / 313KVA ENGINE GENERATOR FOR STANDBY SERVICE.
2. PROVIDE CONCRETE FOUNDATION FOR ENGINE GENERATOR. MAKE REQUIRED GENERATOR CONNECTIONS FOR BATTERY CHARGER, JACKET HEATER, START/STOP CONTROL, AND MAIN FEEDER CIRCUIT.
3. FURNISH AND INSTALL 800A-3P AUTOMATIC TRANSFER SWITCH AND CONNECT TO EXISTING ELECTRICAL DISTRIBUTION AS INDICATED ON THE DRAWINGS.
4. PATCH AND REPAIR CONCRETE AND ASPHALT AT AREAS OF EXCAVATION UNDER THIS PROJECT.
5. PATCH AND REPAIR SHEET ROCK AND OTHER INTERIOR FINISHES IN AREAS OF WORK PERFORMED UNDER THIS PROJECT.
6. COORDINATE WITH GENERATOR SUPPLIER FOR START UP AND TESTING OF THE GENERATOR SYSTEM.
7. COORDINATE WITH GENERATOR SUPPLIER AND SANTA FE COUNTY FOR PERSONNEL TRAINING ON GENERATOR OPERATION AND MAINTENANCE.

PEAK POWER ENGINEERING, INC.
1309 Agua Fria, Santa Fe, NM 87501
TEL 505-982-7071
FAX 505-982-2274

No.	REVISION	BY	APP.	DATE

PROJECT: 16043 DESIGNED BY: D.G.
FILE: 16043 DRAWN BY: D.G.
DATE: 3/28/16 CHECKED BY: D.G.
SCALE: AS NOTED

PROJECT: SANTA FE COUNTY GENERATOR INSTALLATION

SHEET TITLE: RANCHO VIEJO FIRE STA TITLE SHEET

DAVID W. GONZALES
NEW MEXICO
9261
3-28-16
PROFESSIONAL ENGINEER

SHEET NO.

E–0

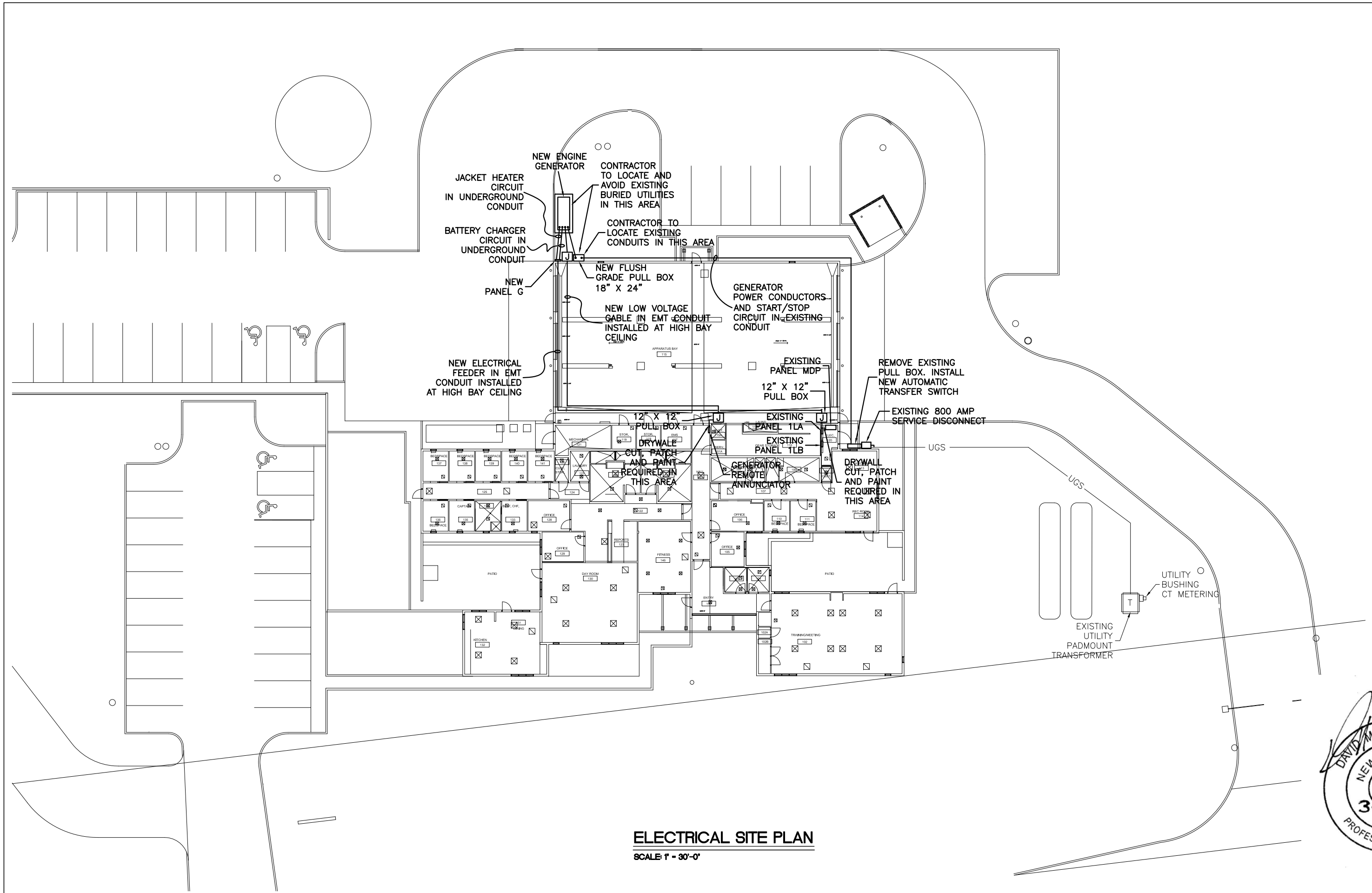

ELECTRICAL SITE PLAN

SCALE: 1" = 30'-0"

PEAK POWER ENGINEERING, INC.
1309 Agua Fria, Santa Fe, NM 87501
TEL 505-982-7071
FAX 505-982-2274

No.	REVISION	BY	APP.	DATE

PROJECT: 16043	DESIGNED BY:	D.G.
FILE: 16043	DRAWN BY:	D.G.
DATE: 3/28/16	CHECKED BY:	D.G.
SCALE:		AS NOTED

PROJECT: SANTA FE COUNTY GENERATOR INSTALLATION

SHEET TITLE: RANCHO VIEJO FIRE STA SITE PLAN

DAVID M. GONZALES
NEW MEXICO
9261
3-28-16
PROFESSIONAL ENGINEER

SHEET NO.

E-1

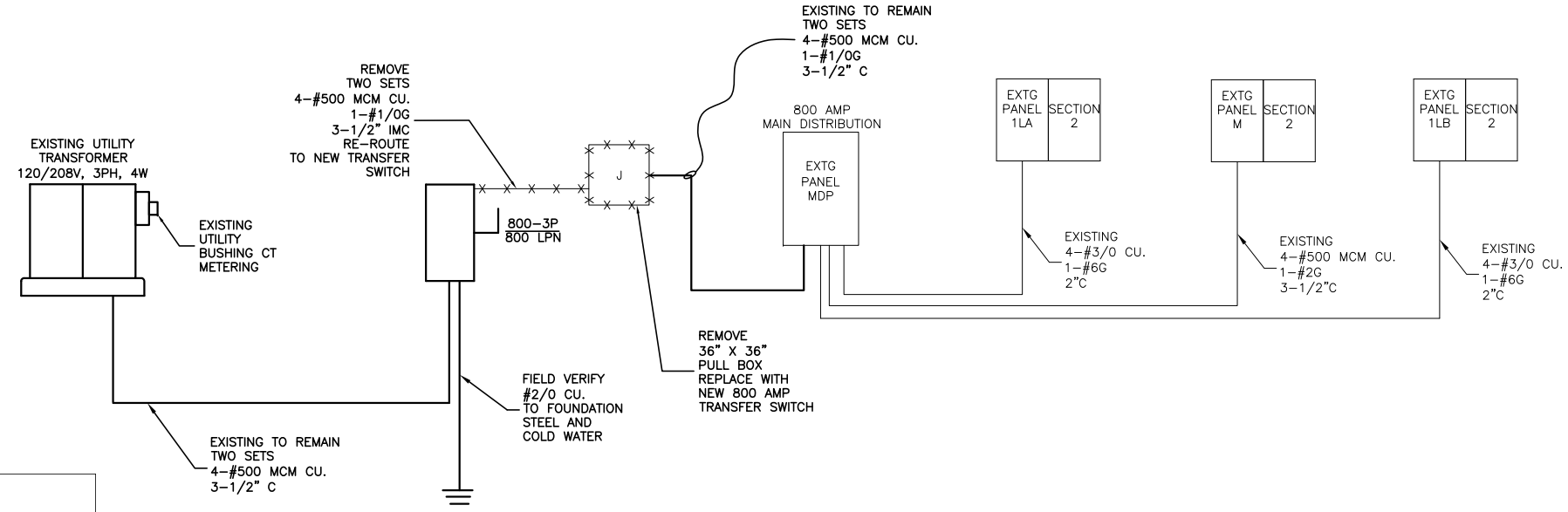

ELECTRICAL RISER DIAGRAM - DEMO

SCALE: NONE

Nameplate
NEW
PANEL G

Fed From
EXISTING PANEL 1LA

Voltage LL: 208 VOLTS
BUS Rating: 100 Amps
MCB or MLO: MLO
MCB Rating: Amps
AIC Rating: 10 K AIC

Voltage LN: 120 VOLTS
1 PHASE, 3 WIRE
Enclosure: NEMA 3R
Mounting: SURFACE
Manufacturer: SQUARE D
Model: NQOD
Branch Breaker: QOB

CIRCUIT DESCRIPTION	D C	LOAD AMPS A	B	C	BKR TR	CCT NO		CCT NO	BKR TR	LOAD AMPS A	B	C	D C	CIRCUIT DESCRIPTION
JACKET HEATER	1	25.	-----	-----	40	1	A	2	20	10.	-----	-----	1	BATTERY CHARGER
	1	-----	25.	-----	2P	3	B	4	20	-----		-----		SPARE
SPARE			-----	-----	20	5	A	6	20		-----	-----		SPARE
SPARE		-----		-----	20	7	B	8	20	-----		-----		SPARE
SPARE			-----	-----	20	9	A	10	20		-----	-----		SPARE
SPARE		-----		-----	20	11	B	12	20	-----		-----		SPARE
			-----	-----			A				-----	-----		
		-----		-----			B			-----		-----		
		-----	-----	-----						-----	-----	-----		
Subtotal (Amps)		25.	25.	-----						10.	.	-----		
Total (Amps)		35.	25.	-----										

ACCESSORIES:	YES	NO
Copper Bus	X	
Service Entrance Rated		X
Door in Door		X
Thru-Feed Lugs		X
Top Skirts		X
Bottom Skirts		X

LOAD SUMMARY			
Load Category	Dem. (KVA)	Dem. Factor	Cnctd (KVA)
General	7.20	1.00	7.20
Lighting	0.00	1.25	0.00
Receptacles	0.00	1.00	0.00
User 1	0.00	1.00	0.00
User 2	0.00	1.00	0.00
Motors	0.00	1.00	0.00
Lgst Motor	0.00	1.25	0.00
Total KVA	7.20		7.20
Total Amps	34.62		34.62

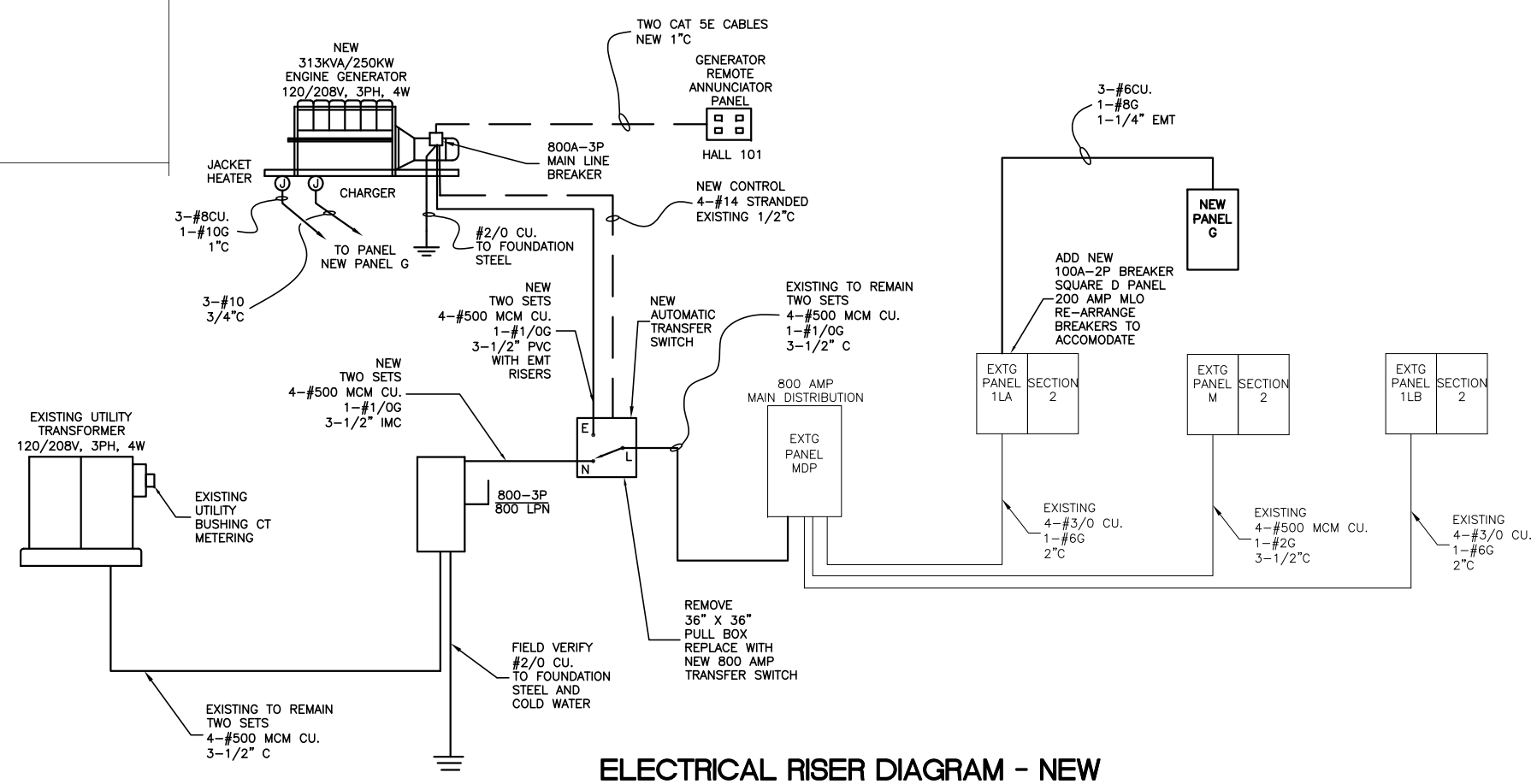

ELECTRICAL RISER DIAGRAM - NEW

SCALE: NONE

PEAK POWER ENGINEERING, INC.
1309 Agua Fria, Santa Fe, NM 87501
TEL 505-982-7071
FAX 505-982-2274

No.	REVISION	BY	APP.	DATE

PROJECT: 16043 DESIGNED BY: D.G.
FILE: 16043 DRAWN BY: D.G.
DATE: 3/28/16 CHECKED BY: D.G.
SCALE: AS NOTED

PROJECT: SANTA FE COUNTY GENERATOR INSTALLATION

SHEET TITLE: RANCHO VIEJO FIRE STA RISER DIAGRAM

DAVID M. GONZALES
NEW MEXICO
9261
3-28-16
PROFESSIONAL ENGINEER

SHEET NO.
E-2

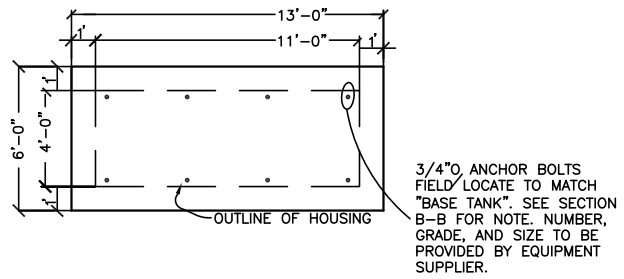

HOUSING LAYOUT

SCALE: 1/8" = 1'-0"

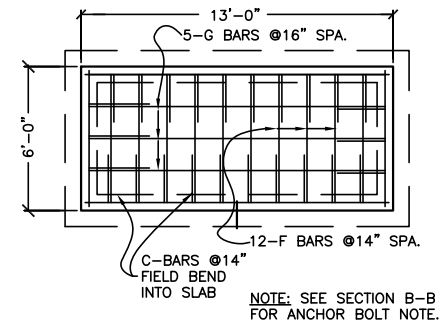

TOP SLAB REINFORCEMENT

SCALE: 1/8" = 1'-0"

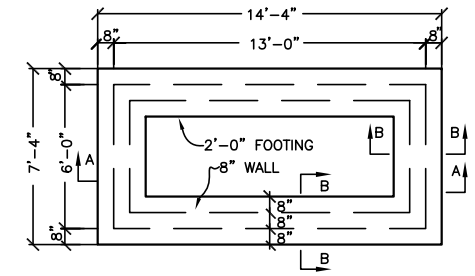

FOOTING PLAN

SCALE: 1/8" = 1'-0"

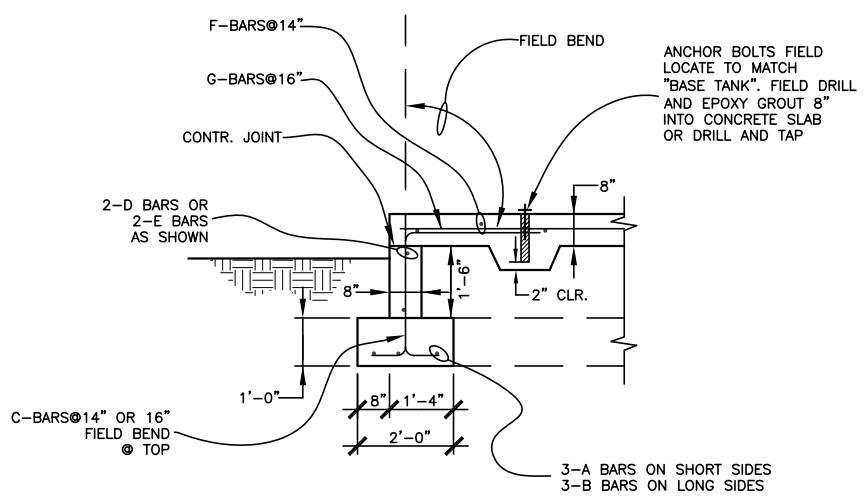

SECTION B-B

SCALE: 1/4" = 1'-0"

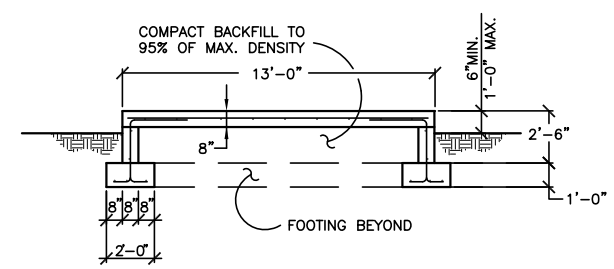

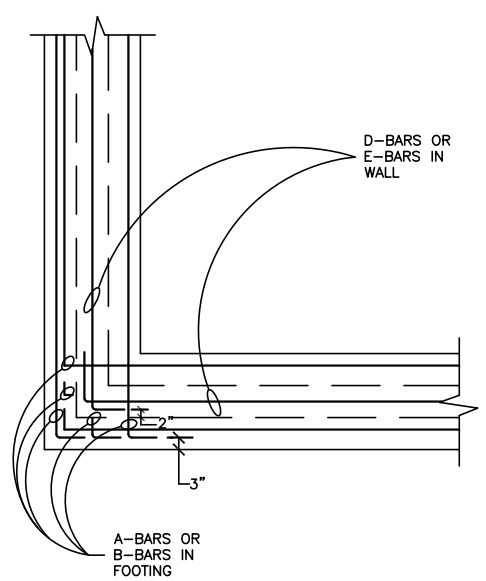

CORNER DETAILS (PLAN)

SCALE: 1/4" = 1'-0"

REINFORCEMENT SCHEDULE

MARK	TYPE	SIZE	LENGTH	NUMBER	LOCATION
A	I	#4	8'- 2"	6	FTG. SHORT
B	I	#4	15'- 2"	6	FTG. LONG
C	II	#4	5'- 2"	26	WALL VERT.
D	I	#4	7'- 0"	4	WALL SHORT
E	I	#4	14'- 0"	4	WALL LONG
F	III	#4	5'- 8"	17	SLAB SHORT
G	III	#4	12'- 8"	8	SLAB LONG

BAR BENDS

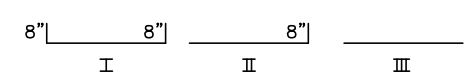

CONSTRUCTION NOTES:

1. CONSTRUCTION SHALL CONFORM TO THE NEW MEXICO STANDARD SPECIFICATIONS FOR PUBLIC WORKS CONSTRUCTION, AND THE PROJECT SPECIFICATIONS.
2. CONCRETE SHALL BE OF 3500 PSI DESIGN STRENGTH, 3/4 INCH AGGREGRATE, 4" SLUMP, WITH 3% TO 5% AIR ENTRAINMENT. CONCRETE MATERIALS, PLACEMENT, AND FINISHING SHALL CONFORM TO ACI-318. THE CONTRACTOR SHALL COORDINATE THE COLOR OF THE CONCRETE WITH PROJECT PERSONNEL. SUBSOILS SHALL BE MOISTENED IMMEDIATELY PRIOR TO CONCRETE PLACEMENT. CONCRETE FLATWORK SHALL BE BROOM FINISHED.
3. COLD WEATHER CONCRETE PLACEMENT AND CURING PROCEDURES SHALL BE PERFORMED AS WEATHER DICTATES, PER ACI-306.
4. AN APPROVED CURING COMPOUND SHALL BE APPLIED TO CONCRETE FLATWORK. CONCRETE FORMWORK SHALL NOT BE STRIPPED UNTIL THE CONCRETE HAS ATTAINED A COMPRESSIVE STRESS OF 3500 PSI.
5. REINFORCING STEEL SHALL BE ASTM A-615, GRADE 60. BAR PLACEMENT AND BAR BENDS SHALL CONFORM TO ACI-318.
6. ANCHOR BOLTS SHALL BE SET PER THE "BASE TANK" HOLE LOCATIONS. THE ANCHOR BOLTS SHALL BE FIELD LOCATED AND PLACED IN CLEANED DRILLED HOLES AND EPOXY GROUTED.
7. LOCATION OF PROPOSED GENERATOR SUPPORT PAD SHALL BE DETERMINED IN THE FIELD BY THE OWNER'S REPRESENTATIVE.
8. THE CONTRACTOR SHALL BE RESPONSIBLE FOR LOCATING UTILITIES AND COORDINATING MITIGATION OF UTILITY PLACEMENTS WHICH CONFLICT WITH THE PROPOSED CONSTRUCTION.
9. EXCAVATION AND EARTHWORK SHALL BE ADJUSTED TO PROVIDE POSITIVE DRAINAGE AWAY FROM THE EXISTING AND PROPOSED CONSTRUCTION BOTH DURING CONSTRUCTION AND UPON COMPLETION.
10. FOUNDATION DESIGN ASSUMES COMPETENT SOIL WITH ALLOWABLE BEARING PRESSURE OF 1500 PSF. THE CONTRACTOR SHALL EXCAVATE AND PLACE THE FOUNDATIONS ON UNDISTURBED SOIL. THE CONTRACTOR SHALL NOTIFY THE ENGINEER OF LOOSE OR UNSTABLE SOILS CONDITIONS.
11. ALL BACKFILL SHALL BE FREE OF ORGANIC MATERIAL AND SHALL TO 95% OF MAXIMUM DENSITY, IN EIGHT INCH MAXIMUM LIFTS.

DETAILS SHOWN ABOVE ARE FOR BIDDING PURPOSES ONLY. EXACT REQUIREMENTS TO BE DETERMINED BASED ON SHOP DRAWINGS.

FOUNDATION FOR STANDBY GENERATOR

SCALE: NONE

PEAK POWER ENGINEERING, INC.
1309 Agua Fria, Santa Fe, NM 87501
TEL 505-982-7071
FAX 505-982-2274

No.	REVISION	BY	APP.	DATE

PROJECT: 16043	DESIGNED BY:	D.G.
FILE: 16043	DRAWN BY:	D.G.
DATE: 3/28/16	CHECKED BY:	D.G.
SCALE:		AS NOTED

PROJECT: SANTA FE COUNTY GENERATOR INSTALLATION

SHEET TITLE: RANCHO VIEJO FIRE STA FOUNDATION DETAILS

DAVID W. GONZALES
NEW MEXICO
9261
3-28-16
PROFESSIONAL ENGINEER

SHEET NO.

E-3