CONSTRUCTION PLANS
FOR
SANTA FE COUNTY UTILITIES ON-CALL

SF MASTER METER VAULTS

SANTA FE COUNTY, NEW MEXICO

MAY 2015

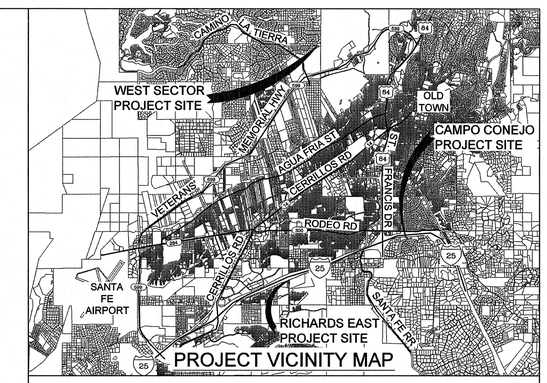

PROJECT VICINITY MAP

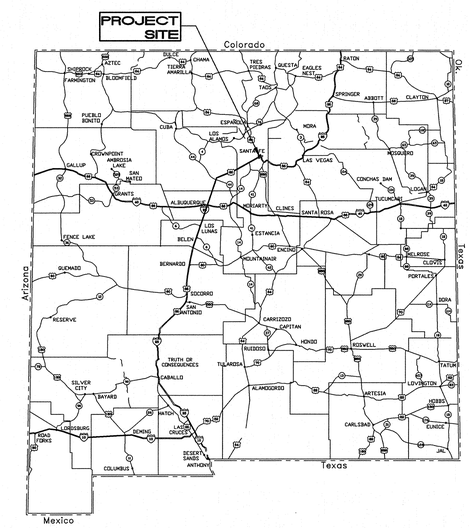

NEW MEXICO

INDEX

SHEET NUMBER	DWG NUMBER	DESCRIPTION
1	G-01	COVER, INDEX OF DRAWINGS AND VICINITY MAPS
2	G-02	GENERAL NOTES AND LEGEND
3	G-03	TOPOGRAPHICAL SURVEY AND CONTROL
4	G-04	WATER VALVE SHUT-OFF PLANS
5	C-01	WEST SECTOR SITE PLAN
6	C-02	CAMPO CONEJO SITE PLAN
7	C-03	RICHARDS AVENUE SITE PLAN
8	D-01	TYPICAL VAULT PLAN, SECTION AND DETAILS
9	D-02	CIVIL DETAILS
10	E-01	ELECTRICAL GENERAL NOTES AND LEGEND
11	E-02	ELECTRICAL SITE PLANS
12	E-03	TYPICAL VAULT, PLAN AND SECTION, AND ELECTRICAL DETAILS
13	E-04	ELECTRICAL DETAILS
14	E-05	ELECTRICAL ONE-LINES AND SCHEDULES
15	TC-01	TRAFFIC CONTROL PLAN

CALL BEFORE YOU DIG

FOR UTILITY LOCATES

DIAL 811 OR
1-800-321-ALERT

ENGINEERS STAMP & SIGNATURE

JUAN CALDERON SAMANIEGO
NEW MEXICO
19830
5/29/15
PROFESSIONAL ENGINEER

Bohannan Huston
www.bhinc.com 800.877.5332

SANTA FE COUNTY UTILITIES (SFCU)

SFCU MASTER METER VAULTS

COVER, INDEX OF DRAWINGS AND VICINITY MAPS

PROJECT NO.	DRAWING NO.	SHEET	OF
20150298	G-01	1	15

P:\20150298\WR\Design\plans\20150298_01_CoverSheet.dwg
May 29, 2015 - 3:30pm
PDF_22x34

GENERAL NOTES

1. ABIDE BY ALL LOCAL, STATE, AND FEDERAL LAWS, RULES AND REGULATIONS WHICH APPLY TO THE CONSTRUCTION OF THESE IMPROVEMENTS.

2. PRIOR TO CONSTRUCTION ACTIVITIES, VERIFY THE HORIZONTAL AND VERTICAL LOCATIONS OF ALL EXISTING UTILITIES AND OBSTRUCTIONS WITH POTENTIAL TO CHANGE PIPE ALIGNMENT. ALL EXISTING UTILITY ELEVATION DATA REPRESENTED ON THE PROFILE ARE APPROXIMATE FIELD MEASUREMENTS FROM SURVEYING OF MANHOLES OR POTHOLING. PROFILE ELEVATIONS FOR GRAVITY LINES SUCH AS STORM AND SANITARY SEWER WERE CALCULATED AND NOT POTHOLED. DATA POINTS NOT VERIFIED FROM POTHOLING, LABELED AS "DEPTH UNK". NEITHER THE ENGINEER NOR THE OWNER ASSUMES RESPONSIBILITY FOR COMPLETENESS OR INTERPRETATION OF SUCH SUPPLEMENTARY INFORMATION.

2.1 AS-BUILT LOCATIONS OF EXISTING PRIVATE UTILITIES SHOWN IN DRAWINGS ARE NOT ADJUSTED TO REFLECT MORE RECENTLY ACQUIRED POTHOLE DATA (ALSO SHOWN IN THE DRAWINGS).

3. ALL ELECTRICAL, TELEPHONE, CABLE TV, GAS AND OTHER UTILITY LINES, CABLES AND APPURTENANCES ENCOUNTERED DURING CONSTRUCTION THAT REQUIRE RELOCATION, SHALL BE COORDINATED WITH THAT UTILITY. COORDINATE ALL NECESSARY UTILITY ADJUSTMENTS.

4. DISPOSAL SITE FOR ALL EXCESS EXCAVATION MATERIAL AND UNSUITABLE MATERIAL SHALL BE OBTAINED BY THE CONTRACTOR IN COMPLIANCE WITH APPLICABLE ENVIRONMENTAL REGULATIONS AND APPROVED BY THE OWNER.

5. PROTECT THE EXISTING UTILITY LINES WITHIN THE CONSTRUCTION AREA. ANY DAMAGE TO EXISTING FACILITIES CAUSED BY CONSTRUCTION ACTIVITY SHALL IMMEDIATELY BE REPAIRED OR REPLACED BY CONTRACTOR. AT THE CONTRACTOR'S EXPENSE.

6. CONSTRUCTION ACTIVITY SHALL BE LIMITED TO THE RIGHT-OF-WAY, PROPERTY LIMITS AND/OR CONSTRUCTION WORK ZONE AS SHOWN ON DRAWINGS. ANY DAMAGE TO ADJACENT PROPERTIES RESULTING FROM THE CONSTRUCTION PROCESS SHALL BE REPAIRED OR REPLACED BY CONTRACTOR. AT THE CONTRACTOR'S EXPENSE.

7. OVERNIGHT PARKING OF CONSTRUCTION EQUIPMENT SHALL NOT OBSTRUCT DRIVEWAYS OR DESIGNATED TRAFFIC LANES.

8. EXCEPT AS SET FORTH IN THE SPECIFICATIONS, OBTAIN ALL THE NECESSARY PERMITS FOR THE PROJECT PRIOR TO COMMENCING CONSTRUCTION (I.E. BARRICADING, SURFACE DISTURBANCE.)

9. CONTRACTOR SHALL REPLACE ANY AND ALL PROPERTY CORNERS DESTROYED DURING CONSTRUCTION. ALL PROPERTY CORNERS MUST BE RESET BY A NEW MEXICO REGISTERED PROFESSIONAL SURVEYOR.

10. AT MINIMUM, FOLLOW THE CONSTRUCTION TRAFFIC CONTROL AND SIGNING NOTES PROVIDED HEREIN. COORDINATE AND OBTAIN APPROVAL WITH THE APPROPRIATE AGENCY, PRIOR TO BEGINNING ANY CONSTRUCTION WORK ON OR ADJACENT TO EXISTING STREETS.

11. ALL BARRICADES AND CONSTRUCTION SIGNING SHALL CONFORM TO APPLICABLE SECTIONS OF THE "MANUAL OF UNIFORM TRAFFIC CONTROL DEVICES" (MUTCD), U.S. DEPARTMENT OF TRANSPORTATION, LATEST EDITION. ALL TRAFFIC CONTROL PLANS SHALL BE STAMPED BY A REGISTERED NEW MEXICO PROFESSIONAL ENGINEER.

12. MAINTAIN ALL CONSTRUCTION TRAFFIC CONTROL DEVICES AND SIGNING AT ALL TIMES. VERIFY THE PROPER LOCATION OF ALL TRAFFIC CONTROL AT THE END AND BEGINNING OF EACH DAY.

13. ALL PAVEMENT SHALL BE SAWCUT WITH A UNIFORM EDGE AND BE SPRAYED WITH A TACK COAT PRIOR TO PAVEMENT PLACEMENT.

14. USE PARALLEL OR ORTHOGONAL PAVEMENT SAWCUTS ONLY, NO DIAGONAL CUTS IN EXISTING PAVEMENT.

15. NO RIGHT-OF-WAY SURVEY WAS CONDUCTED WITH THIS PROJECT. RIGHT-OF-WAY SHOWN ON OTHER PORTIONS OF THESE PLANS ARE APPROXIMATE AND ARE SHOWN FOR INFORMATION ONLY.

16. SUPPORT EXPOSED EXISTING UTILITIES SUSPENDED ACROSS OR PARALLEL WITH TRENCH EXCAVATION.

17. USE CAUTION AT ALL EXISTING STRUCTURES INCLUDING ALL MASONRY WALLS, BUILDING, ETC. THE CONTRACTOR WILL BE RESPONSIBLE FOR REPAIR OR REPLACEMENT OF ANY DAMAGE TO ANY STRUCTURES CAUSED BY THE CONTRACTOR'S OPERATIONS.

18. TEMPORARY DRAINAGE MEASURES SHALL BE PROVIDED AS NECESSARY TO SAFELY CONVEY STORM WATER RUNOFF TO EXISTING OUTFALLS INCLUDING SILT FENCES AND SEDIMENT CONTROL MEASURES. REPAIR ANY DAMAGE RESULTING FROM STORM WATER FLOWS TO PRIVATE PROPERTY OR IMPROVEMENTS CONSTRUCTED BY THE CONTRACTOR SHALL BE THE SOLE RESPONSIBILITY OF THE CONTRACTOR.

19. BEARINGS ARE GRID AND DISTANCES ARE GROUND.

20. ALL BURIED DUCTILE IRON PIPE SHALL BE ENCASED IN POLYETHYLENE ENCASEMENT AND SHALL BE INCIDENTAL TO THE PIPE BID ITEM. ALL STEEL OR DUCTILE IRON VALVES, FITTINGS, COUPLINGS, JOINT RETAINERS IN NEW PVC WATER DISTRIBUTION PIPING SHALL BE ENCASED IN POLYETHYLENE AND SHALL BE INCIDENTAL TO THE PIPE BID ITEM.

21. CONTRACTOR TO PROVIDE AS-BUILT DRAWINGS TO THE ENGINEER. THE ENGINEER WILL REVIEW THE AS-BUILTS DRAWINGS AND CREATE RECORD DRAWINGS TO BE SUBMITTED TO SANTA FE COUNTY BASED ON THE CONTRACTOR-PROVIDED AS-BUILT DRAWINGS .

22. CONTRACTOR SHALL PROVIDE A MINIMUM OF 24 HOURS NOTICE TO FIELD INSPECTOR OR GEOTECHNICAL FIRM TO PERFORM FIELD DENSITY TESTS OR SOIL SAMPLING DURING CONSTRUCTION.

23. EXISTING VALVES SHALL ONLY BE OPERATED BY THE RESPECTIVE UTILITY OWNER. CONTRACTOR SHALL PROVIDE A MINIMUM 7 DAY NOTICE TO UTILITY OWNER WHEN A SHUT-OFF IS REQUIRED.

GENERAL NOTES (CONTINUED)

24. ALL TEES AND BENDS SHALL BE FLEX-RING JOINTS AS MANUFACTURED BY AMERICAN CAST IRON PIPE COMPANY OR EQUAL FOR PIPE GREATER THAN 12 INCH DIAMETER. ALL JOINTS SHALL BE RESTRAINED.

25. SANTA FE COUNTY UTILITIES CONSTRUCTION STANDARDS AND SPECIFICATIONS SHALL BE USED AS SPECIFICALLY NOTED.

26. ALL PIPE SHALL HAVE LOCATE WIRE AND WARNING TAPE PER SDCW STANDARDS AND SPECIFICATIONS.

27. ALL EASEMENT AND RIGHT-OF-WAY BOUNDARIES TO BE DELINEATED WITH SMOOTH WIRE FENCE WITH TEE POSTS EVERY 10 FEET. COST FOR MATERIALS AND LABOR TO INSTALL SHALL BE INCIDENTAL. NO SEPARATE PAYMENT WILL BE MADE FOR SMOOTH WIRE FENCE.

28. CONTRACTOR SHALL NOTIFY THE SANTA FE COUNTY UTILITIES DEPARTMENT (SFCU) FIVE (5) DAYS PRIOR TO COMMENCEMENT OF WORK.

29. ALL EASEMENTS SHALL BE DEDICATED, CLEARED, GRADED AND STAKED PRIOR TO WATERLINE INSTALLATION.

30. CONTRACTOR (DEVELOPER) SHALL PROVIDE CONSTRUCTION STAKING UTILIZING THE APPROPRIATE RIGHT-OF-WAY MAPS, SIGNED PLATS AND SFCU DRAWINGS.

31. MATERIAL SUBMITTALS SHALL BE APPROVED BY THE ENGINEER PRIOR TO CONSTRUCTION.

32. CONTACT NEW MEXICO ONE CALL AT 811 TWO (2) WORKING DAYS IN ADVANCE OF CONSTRUCTION FOR UTILITY SPOTS.

33. A MINIMUM OF 4 FEET COVER TO TOP OF PIPE SHALL BE MAINTAINED ON ALL WATERMAINS AND SERVICES.

34. CONTRACTOR SHALL SUBMIT AS-BUILT CONSTRUCTION PACKET WITHIN FIVE (5) DAYS OF COMPLETION OF CONSTRUCTION INCLUDING; VALVE TIES, AS-BUILT DRAWINGS (INCLUDING, BUT NOT LIMITED TO: FITTING-TO-FITTING MEASUREMENTS, SERVICE-TO-SERVICE MEASUREMENTS, CENTER OF MAIN TO CENTER OF SERVICE MEASUREMENTS, LENGTH OF MAIN INSTALLED, FITTINGS INSTALLED, ETC.) AND POTABILITY RESULTS.

35. ALL VALVE BOXES SHALL BE BROUGHT UP TO GRADE AFTER FIRST COURSE OF ASPHALT AND BEFORE FINAL COURSE OF ASPHALT.

36. A MECHANICAL RESTRAINT SYSTEM SHALL BE UTILIZED ON FITTINGS AND PIPING FOR THRUST RESTRAINT. CONCRETE THRUST BLOCKING SHALL BE USED ONLY FOR SPECIAL CONDITIONS. (E.G. CAPS WHERE MAIN WILL BE EXTENDED IN THE FUTURE) AS SPECIFICALLY APPROVED BY SFCU.

37. ANY FIELD CHANGES TO THESE PLANS REQUIRE APPROVAL OF BOTH THE DESIGN ENGINEER AND SFCU.

38. WORK ON SFCU FACILITIES SHALL NOT BEGIN UNTIL SFCU HAS ISSUED A NTP TO THE APPROVED UTILITY CONTRACTOR.

39. ALL WORK WITHIN NMDOT ROW SHALL BE CONSTRUCTED IN CONFORMANCE WITH THE NEW MEXICO DEPARTMENT OF TRANSPORTATION SPECIFICATIONS FOR HIGHWAY AND BRIDGE CROSSINGS, 2014 EDITION.

CONTRACTORS QUALIFICATIONS

1. CONTRACTOR OR SUBCONTRACTOR IS REQUIRED TO DEMONSTRATE A MINIMUM OF 3 SUCCESSFUL INSTALLATIONS OF LINESTOPS ON TO A PRESSURIZED WATERLINE 12" IN DIAMETER OR LARGER WITHIN THE LAST 5 YEARS. AT LEAST 1 OF THE INSTALLATIONS MUST HAVE BEEN ONTO CCP PIPE.

2. WITH THE BID, CONTRACTOR OR SUBCONTRACTOR SHALL PROVIDE A SUMMARY OF RELEVANT EXPERIENCE IN THE LAST 10 YEARS, LISTING NAMES OF AT LEAST 5 PROJECTS INCLUDING LOCATION, PROJECT VALUE, DATE OF COMPLETION, LINES SIZE, BRIEF DESCRIPTION OF PROJECT(S), AND NAME, ADDRESS, OWNER/AGENCY, TELEPHONE, AND EMAIL ADDRESS OF A PERSON WHO CAN VERIFY THE ACCURACY OF THE EXPERIENCE.

3. WITH THE BID, CONTRACTOR OR SUBCONTRACTOR SHALL PROVIDE A RESUME OF THE SUPERINTENDENT THAT WILL BE PRESENT AT THE JOBSITE DURING ALL LINESTOPS PERFORMED FOR THIS PROJECT.

4. OWNER SHALL REVIEW THIS INFORMATION DURING THE BID EVALUATION AND RESERVES THE RIGHT TO REJECT ANY BID WHICH DOES NOT MEET THE QUALIFICATION OR IF THE INFORMATION CANNOT BE VERIFIED.

5. ANY BID WHICH DOES NOT INCLUDE THIS INFORMATION SHALL BE CONSIDERED NON-RESPONSIVE.

LEGEND

TRENCH LIMITS
NEW WATERLINE
EXISTING WATERLINE — W —
EXISTING SANITARY SEWER — SAS —
EXISTING STORM DRAIN — SD —
EXISTING GAS LINE — GAS —
EXISTING TELEPHONE LINE — TEL —
EXISTING FIBER OPTIC LINE — FO —
EXISTING CABLE LINE — CBL —
EXISTING OVERHEAD ELECTRIC — OHE —
EXISTING APPARENT EASEMENT
EXISTING EDGE OF PAVEMENT
EXISTING FENCE — X — X — X —
NEW VALVE
EXISTING WATER VALVE
EXISTING CABLE FEATURE
EXISTING TELEPHONE FEATURE
EXISTING ELECTRICAL FEATURE
EXISTING POWER POLE
POT HOLE LOCATION
NEW MINOR CONTOUR
EXISTING MAJOR CONTOUR
EXISTING MINOR CONTOUR

CALL BEFORE YOU DIG
FOR UTILITY LOCATES
DIAL 811 OR
1-800-321-ALERT

SURVEY INFORMATION
FIELD NOTES
NO.

ENGINEER'S SEAL
JUAN CARLOS SAMANIEGO
NEW MEXICO
(19939)
PROFESSIONAL ENGINEER

NO.	DATE	REMARKS	BY

REVISIONS

DESIGN

DESIGNED BY:	JCS	DATE: 05/2015
DRAWN BY:	JJG	DATE: 05/2015
CHECKED BY:	TAB	DATE: 05/2015

Bohannan Huston
www.bhinc.com 800.877.5332

SANTA FE COUNTY UTILITIES (SFCU)

SFCU MASTER METER VAULTS

GENERAL NOTES AND LEGEND

PROJECT NO.	DRAWING NO.	SHEET	OF
20150298	G-02	2	15

P:\20150298\WR\Design\plans\20150298_02_GeneralNotesLegend.dwg
May 29, 2015 - 3:31pm
PDF_22x34

Project Control Specifications:

Units:	US Survey Foot
Horizontal Datum:	NAD_83(2011)(EPOCH:2010.0000)
Vertical Datum:	NAVD88
Geoid Model:	GEOID12A – for new control monumentation
Projection:	Transverse Mercator
State Plane and/or UTM Zone:	New Mexico Central Zone (3002)
Basis of Bearing:	Grid Bearings
Project Combined Factor:	0.99958981402158
Modification Method Used:	Scaled State Plane coordinates about origin (0,0) no truncation
Field Methodology:	RTK Solution
Equipment Used:	Trimble GPS Equipment (5700, 5800, and R8 Dual Frequency Receivers)
Control Set Date:	December 23, 2014
Observation Date:	December 23, 2014
Adjustment/ Publication Date:	February 5, 2015

I, Robert Gromatzky, New Mexico Professional Surveyor No.16469, do hereby certify that this Control Survey Report was prepared by me or under my direct supervision based on an actual survey on the ground as described herein; that I am responsible for this survey; and that the survey and report meets the minimum standards for surveying in New Mexico.

February 5, 2015
Date

Robert Gromatzky, P.S.
Bohannan Huston, Inc.
Courtyard I / 7500 Jefferson St. NE
Albuquerque, NM 87109-4335
(505).823.1000

ROBERT GROMATZKY NEW MEXICO 16469 LICENSED PROFESSIONAL SURVEYOR

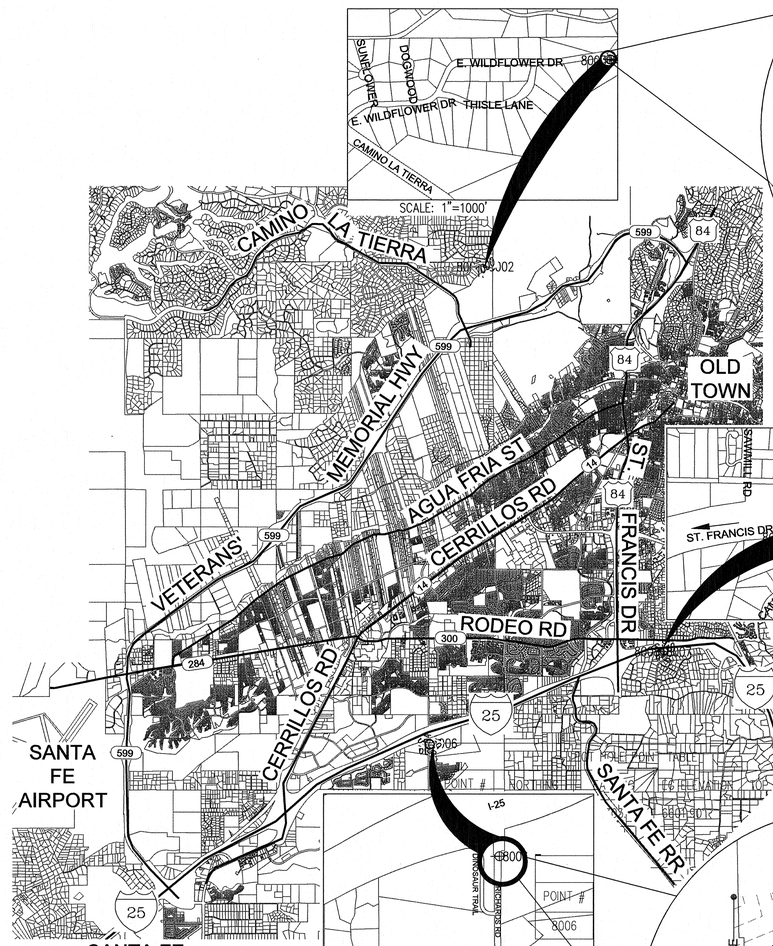

SANTA FE VICINITY MAP
SCALE: 1"=5000'

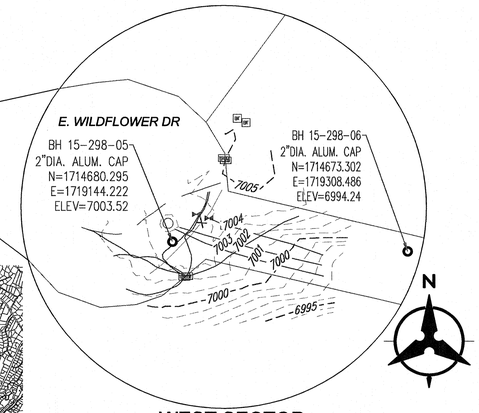

WEST SECTOR PROJECT SITE
SCALE: 1"=50'

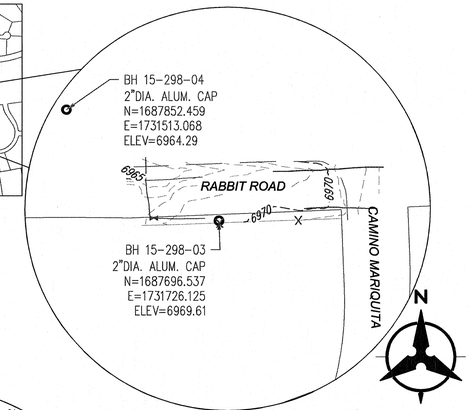

CAMPO CONEJO PROJECT SITE
SCALE: 1"=100'

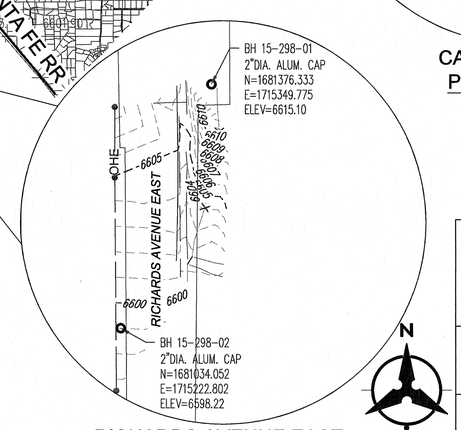

RICHARDS AVENUE EAST PROJECT SITE
SCALE: 1"=100'

Overall Control Listing:

Bohannan Huston

Name	Latitude	Longitude	Grid Northing	Grid Easting	Ellipsoid	Orthometric Height	Horizontal Accuracy	Vertical Accuracy	Stamping
BH 15-298-01	N 35° 37' 8.481621"	W 106° 0' 0.8503655"	1680688.655	1714646.175	6552.626	6615.101	0.049	0.057	BH 15-298-01
BH 15-298-02	N 35° 37' 5.1007697"	W 106° 0' 2.3983589"	1680344.509	1714519.246	6535.716	6598.222	0.062	0.073	BH 15-298-02
BH 15-298-03	N 35° 38' 10.5098841"	W 105° 56' 42.3286072"	1687004.271	1731015.790	6908.426	6969.614	0.058	0.063	BH 15-298-03
BH 15-298-04	N 35° 38' 12.057807"	W 105° 56' 44.9030148"	1687160.117	1730692.820	6903.110	6964.292	0.059	0.065	BH 15-298-04
BH 15-298-05	N 35° 42' 37.6422035"	W 105° 59' 13.8288884"	1713976.958	1718439.044	6942.005	7003.523	0.068	0.095	BH 15-298-05
BH 15-298-06	N 35° 42' 37.5686505"	W 105° 59' 11.8377275"	1713969.962	1718503.258	6932.712	6994.245	0.069	0.095	BH 15-298-06

CALL BEFORE YOU DIG
FOR UTILITY LOCATES
DIAL 811 OR
1-800-321-ALERT

SURVEY INFORMATION
FIELD NOTES
NO.

ENGINEER'S SEAL
JUAN CARLOS SANMANIEGO NEW MEXICO 19890 PROFESSIONAL ENGINEER

NO.	DATE	REMARKS	BY
		REVISIONS	

DESIGN
DESIGNED BY: JCS DATE: 05/2015
DRAWN BY: JJG DATE: 05/2015
CHECKED BY: TAB DATE: 05/2015

Bohannan Huston
www.bhinc.com 800.877.5332

SANTA FE COUNTY UTILITIES (SFCU)

SFCU MASTER METER VAULTS

TOPOGRAPHICAL SURVEY AND CONTROL

PROJECT NO.	DRAWING NO.	SHEET	OF
20150298	G-03	3	15

P:\20150298\WR\Design\plans\20150298_03_TopoSurveyControl.dwg
May 29, 2015 – 3:34pm
PDF_22x34

NOTICE:

24 HOUR (MAX.) SHUTDOWN PROCEDURE PROVIDED FOR EMERGENCY USE ONLY, AND ONLY, AFTER WRITTEN APPROVAL BY SANTA FE COUNTY PUBLIC WORKS DEPARTMENT.

PRESSURIZED CONNECTIONS ARE REQUIRED FOR WEST SECTOR AND RICHARDS AVENUE TIE-INS.

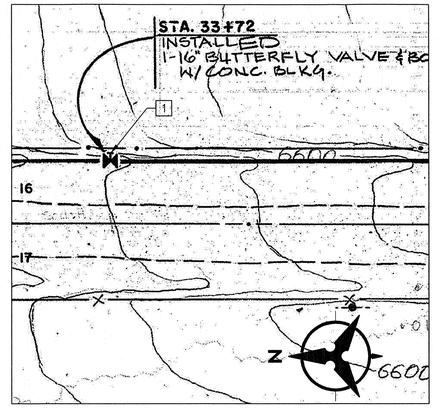

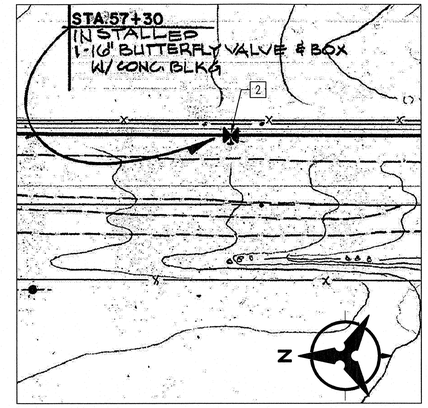

1 RICHARDS AVENUE EAST PROJECT SITE
@ APPROXIMATELY STA. 53+10 (1986 ALIGNMENT) FROM RECORD DRAWINGS
(METER VAULT LOCATION NOT SHOWN)
SCALE: N.T.S.

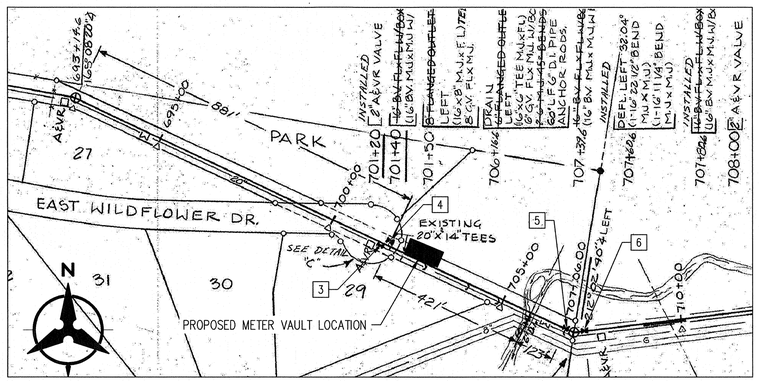

2 WEST SECTOR PROJECT SITE FROM RECORD DRAWINGS
SCALE: N.T.S.

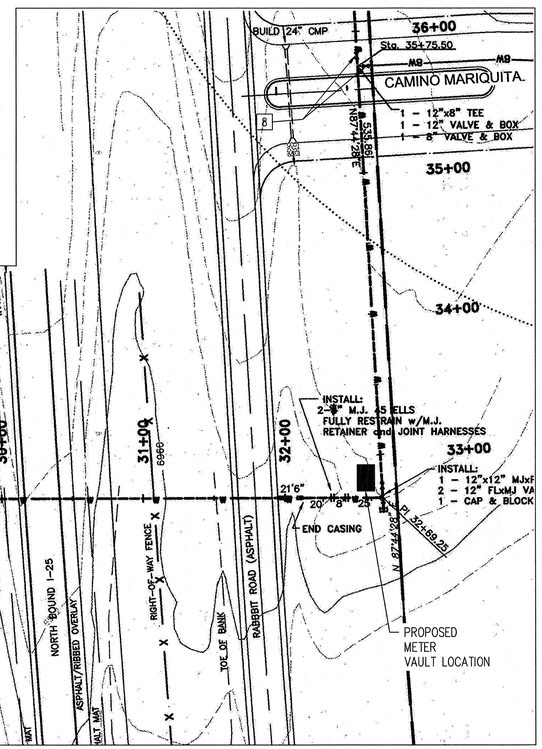

3 CAMPO CONEJO PROJECT SITE FROM RECORD DRAWINGS
SCALE: N.T.S.

CONSTRUCTION NOTES:

CONSTRUCTION NOTES:

1. HAVE ALL FITTINGS, MATERIALS AND EQUIPMENT ON SITE PRIOR TO VALVE SHUT OFF FOR REQUIRED ELEMENT. ALL EXCAVATION SHALL BE COMPLETE EXCEPT AS NECESSARY TO MAINTAIN SAFE SYSTEM OPERATION WHILE UNDER PRESSURE.
2. CONTRACTOR SHALL NOT OPERATE ANY VALVES (NEW OR EXISTING) ON OR CONNECTED TO THE SFCU SYSTEM.
3. DO NOT REMOVE ANY VALVES OR PIPING UNTIL REPLACEMENT VALVES AND PIPING ARE IN PLACE AND TESTED AND REMOVAL IS APPROVED BY THE OWNER.
4. DISINFECT FITTINGS BY SWABBING WITH STRONG (50 PPM) SOLUTION OF CHLORINE IN ACCORDANCE WITH SUPPLEMENTAL SPECIFICATION SECTION 15141. APPLY SOLUTION TO ALL WATER SIDE SURFACES IN THE PRESENCE OF SFCU REPRESENTATIVE. THOROUGHLY CLEAN ALL FITTINGS, VALVES, ETC., PRIOR TO APPLYING CHLORINE SOLUTION. DO NOT ALLOW DELETERIOUS MATERIALS, MUD, DRAINED WATER, ETC., TO ENTER FITTINGS OR EXPOSED PIPELINES.
5. DISINFECT NEW SECTIONS OF PIPELINES AND EXISTING PIPELINES AS PRESCRIBED IN THE NMSSPW SPECIFICATIONS, SECTION 801.
6. ONCE SHUT-DOWN HAS BEEN ACHIEVED, THE WORK OF THE CONTRACTOR SHALL PROCEED IN A CONTINUOUS UNINTERRUPTED MANNER UNTIL THAT WORK IS COMPLETE. WORK SHALL CONTINUE 24 HOURS PER DAY/ 7 DAYS A WEEK UNTIL THE SYSTEM IS OPERATIONAL. REFER TO SPECIFICATION 1010 SUMMARY OF WORK FOR ADDITIONAL DETAILS AND CONSTRUCTION SEQUENCE REQUIREMENTS FOR THIS PROJECT.

EXISTING VALVE LOCATION AND SHUT-OFF PLAN

RICHARDS AVENUE EAST PROJECT			(FOR EMERGENCY SHUT-OFF ONLY)	
KEYED NOTE NUMBER	VALVE NUMBER	SIZE	LOCATION	VALVE INSTRUCTIONS
1	1	16"	1,980 LF NORTH FROM PROPOSED METER VAULT, ALONG RICHARDS AVENUE (STATION 33+72 OF 1986 RECORD DRAWINGS)	SHUT-OFF VALVE 1
2	2	16"	420 LF SOUTH FROM PROPOSED METER VAULT, ALONG RICHARDS AVENUE (STATION 57+30 OF 1986 RECORD DRAWINGS)	SHUT-OFF VALVE 2
WEST SECTOR PROJECT			(FOR EMERGENCY SHUT-OFF ONLY)	
KEYED NOTE NUMBER	VALVE NUMBER	SIZE	LOCATION	VALVE INSTRUCTIONS
3	3	16"	SEE PLAN	SHUT-OFF VALVE 3
4	4	16"	SEE PLAN	SHUT-OFF VALVE 4
5	5	16"	SEE PLAN	SHUT-OFF VALVE 5; USE VALVE 5 TO DRAIN LINE AS NEEDED
6	6	16"	SEE PLAN	SHUT-OFF VALVE 6
CAMPO CONEJOS PROJECT			(MAXIMUM 12HR WATER SHUT-OFF, EXCEPT FOR EMERGENCIES)	
KEYED NOTE NUMBER	VALVE NUMBER	SIZE	LOCATION	VALVE INSTRUCTIONS
7	7	12"	APPROXIMATELY STATION 25+22 (CAMPO CONEJOS WL ALIGNMENT ,1999) NORTH OF I-25, JUST SOUTH OF RODEO ROAD	SHUT-OFF VALVE 7
8	8 AND 9	12"	APPROXIMATELY STATION 35+75 (CAMPO CONEJOS WL ALIGNMENT, 1999) JUST SOUTH OF INTERSECTION OF RABBIT ROAD AND CAMINO MARIQUITA, IN NORTH BOUND LANE OF CAMINO MARIQUITA	SHUT-OFF VALVE 8 AND 9

CALL BEFORE YOU DIG
FOR UTILITY LOCATES
DIAL 811 OR
1-800-321-ALERT

SURVEY INFORMATION
FIELD NOTES

NO.	DATE	REMARKS	BY
		REVISIONS	

ENGINEER'S SEAL

DESIGN
DESIGNED BY: JCS DATE: 05/2015
DRAWN BY: JJG DATE: 05/2015
CHECKED BY: TAB DATE: 05/2015

Bohannan Huston
www.bhinc.com 800.877.5332

SANTA FE COUNTY UTILITIES (SFCU)

SFCU MASTER METER VAULTS

WATER VALVE SHUT-OFF PLANS

PROJECT NO.	DRAWING NO.	SHEET	OF
20150298	G-04	4	15

P:\20150298\WR\Design\plans\20150298_04_WaterShut-OffPlan.dwg
May 29, 2015 - 3:37pm
PDF_22x34

POT HOLE POINT TABLE						
POINT #	NORTHING	EASTING	EG ELEVATION	TOP ELEVATION	WL DIA.	℄ ELEVATION
8002	1714680.540	1719224.384	7000.47	6997.30	16" WL	6996.62
8003	1714685.319	1719205.521	7001.77	6998.20	16" WL	6997.52

POINT TABLE				
POINT #	NORTHING	EASTING	CL ELEVATION	DESCRIPTION
50	1714697.911	1719192.449	6997.97	90 BEND
51	1714689.984	1719189.904	ME	TIE POINT
52	1714680.808	1719218.466	ME	TIE POINT
53	1714688.742	1719221.013	6995.77	90 BEND
54	1714698.111	1719203.277	6995.64 FF	VAULT CORNER
55	1714689.494	1719210.491	6995.44 FF	VAULT CORNER
56	1714691.752	1719200.185	7005.00 RIM	VAULT LID

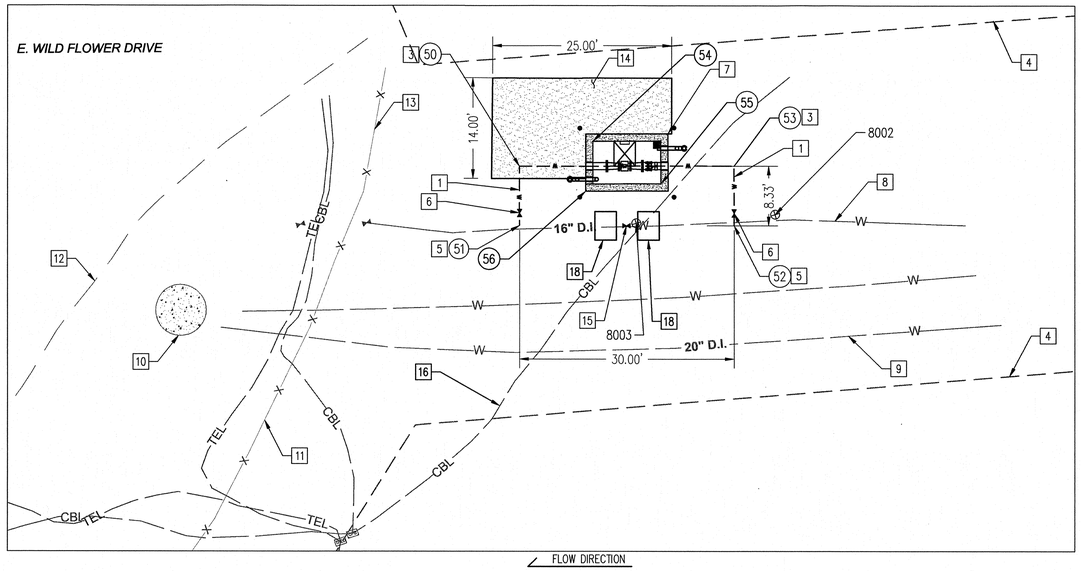

1 WEST SECTOR SITE PLAN
SCALE: 1" = 10'

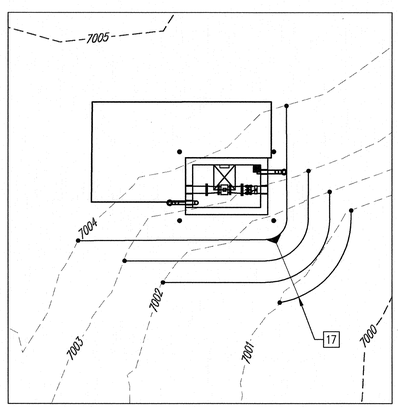

2 WEST SECTOR GRADING PLAN
SCALE: 1" = 10'

GENERAL NOTES

1. RESTRAIN ALL JOINTS.
2. MAXIMUM DEFLECTION ON PIPE JOINTS AS ALLOWED BY PIPE MANUFACTURER.
3. ALL NEW PIPE AND FITTINGS SHALL BE DUCTILE IRON PIPE, PRESSURE CLASS 200.
4. THE CONTRACTOR MUST PROVIDE ACCESS TO EACH HOUSEHOLD OR BUSINESS THROUGHOUT CONSTRUCTION ACTIVITIES. THE CONTRACTOR SHALL BE RESPONSIBLE FOR COORDINATING THIS ACTIVITY WITH THE RESPECTIVE PROPERTY OWNER OR RESIDENT.
5. VIBRATORY COMPACTION SHALL NOT BE USED WHEN CONSTRUCTION ACTIVITIES ARE WITHIN 100 FEET OF A RESIDENTIAL OR COMMERCIAL STRUCTURE.
6. DUCTILE IRON PIPE SHALL BE WRAPPED IN POLYETHYLENE ENCASEMENT
7. PIPELINE JOINTS SHALL BE RESTRAINED BY THE USE OF MECHANICAL JOINT RESTRAINT.
8. SOILS IN THE PROJECT AREA ARE ASSUMED TO BE ACCEPTABLE AS BACKFILL. A PROCTOR ANALYSIS SHALL BE CONDUCTED ON ONE REPRESENTATIVE SAMPLE AT EACH PROJECT SITE, AND BACKFILL SHALL BE TESTED FOR COMPACTION AND MOISTURE TO MEET DETAILED REQUIREMENTS AS SPECIFIED IN NMSSPW, SECTION 701. UNSUITABLE EXCAVATION MATERIAL SHALL BE DISPOSED OF AND REPLACED WITH ENGINEERED FILL. ALL TRENCHING AND EXCAVATION, IMPORTED ENGINEERED FILL, AND BACKFILL COSTS SHALL BE INCIDENTAL TO THE ASSOCIATED WL BID ITEM.
9. NOT USED.
10. ALL FLANGED JOINTS WITH DISSIMILAR MATERIALS SHALL BE MADE USING A FLANGE INSULATION GASKET KIT, THAT INCLUDES AN INSULATING GASKET, BOLT SLEEVES, AND WASHERS SUCH AS PSI LINEBACKER.
11. PARK EQUIPMENT AND VEHICLES AS NOT TO INTERFERE WITH NORMAL ACTIVITIES OF RESIDENTS, BUSINESSES OR OTHER CONTRACTORS NEAR THE PROJECT SITE.
12. MAINTAIN ACCESS TO PRIVATE PROPERTIES, SCHOOLS AND BUSINESSES AT ALL TIMES DURING CONSTRUCTION.
13. ALL BURIED FLANGED JOINTS SHALL BE WRAPPED IN WAX TAPE COATING, PER SPECIFICATION SECTION 09955 COLD APPLIED WAX TAPE COATING.

CONSTRUCTION NOTES:

1. EXISTING 16" DUCTILE IRON WL SHALL REMAIN IN-SERVICE AT ALL TIMES.
2. TAPS ON 16" D.I.P. SHALL BE PRESSURIZED TAPS.
3. ALL WORK, INCLUDING TAPS, VALVES, PIPING FOR THE BYPASS TO THE WATER METER SHALL BE COMPLETE, INCLUDING PRESSURE TESTING, DISINFECTION, AND BACTERIAL TESTING, AND BE ABLE TO SERVE AS A BYPASS, PRIOR TO PERFORMING LINESTOPS AND VALVE INSTALLATION ON EXISTING 16" D.I. WL.

KEYED NOTES:

1. 12" DUCTILE IRON PIPE, SEE DETAIL 2 ON DWG D-02 FOR TYPICAL TRENCH DETAIL, RESTRAIN ALL JOINTS.
3. 90 DEGREE HORIZONTAL BEND, (MJXMJ).
4. APPARENT ROW.
5. 16"X12" TAPPING SADDLE, ROMAC STAINLESS STEEL TAPPING TEE, MODEL STS420, OR ENGINEER APPROVED EQUAL, PRESSURIZED CONNECTION.
6. 12" DUCTILE IRON GATE VALVE, FLXFL, MUELLER MODEL 2360, OR ENGINEER APPROVED EQUAL.
7. METER VAULT, SEE DETAIL 1 ON SHEET D-01 FOR VAULT DETAILS.
8. EXISTING 16" WL.
9. EXISTING 20" WL.
10. EXISTING ARV MANHOLE.
11. EXISTING SPLIT RAIL WOOD FENCE.
12. EXISTING EDGE OF PAVEMENT.
13. IF NECESSARY TO ACCESS SITE, REMOVE 12' OF FENCE, AND REINSTALL POST-CONSTRUCTION, EXACTLY TO PRE-CONSTRUCTION CONDITION, AT THE CONTRACTORS EXPENSE.
14. ACCESS DRIVEWAY, PLACE FG = EG + 6" AGGREGATE BASE COURSE ON 6" PREPARED SUBGRADE.
15. 16" BUTTERFLY BYPASS VALVE ON EXISTING WL WITH LINESTOP FOR VALVE INSTALLATION AND THRUST BLOCKS, SEE DETAIL 1 ON SHEET D-02.
16. CONTRACTOR SHALL RELOCATE OR SUPPORT EXISTING UTILITY.
17. GRADE TO DRAIN AROUND PERIMETER OF VAULT AT A MAX. OF 3:1 SLOPE.
18. THRUST BLOCK, SEE DETAIL ON SHEET D-02.

ME = MATCH EXISTING
FF = FINISH FLOOR

N

10 5 0 10
1"=10'

CALL BEFORE YOU DIG
FOR UTILITY LOCATES
DIAL 811 OR
1-800-321-ALERT

SURVEY INFORMATION
FIELD NOTES
NO.

ENGINEER'S SEAL
JUAN CARLOS SAMANIEGO
NEW MEXICO
19930
PROFESSIONAL ENGINEER

NO.	DATE	REMARKS	BY

REVISIONS

DESIGN

DESIGNED BY:	JCS	DATE: 05/2015
DRAWN BY:	LJG	DATE: 05/2015
CHECKED BY:	TAB	DATE: 05/2015

Bohannan Huston
www.bhinc.com
800.877.5332

SANTA FE COUNTY UTILITIES (SFCU)

SFCU MASTER METER VAULTS

WEST SECTOR SITE AND GRADING PLAN

PROJECT NO.	DRAWING NO.	SHEET	OF
20150298	C-01	5	15

P:\20150298\WR\Design\plans\20150298_05_WestSectorPnP.dwg
May 29, 2015 - 3:39pm
PDF_22x34

POT HOLE POINT TABLE						
POINT #	NORTHING	EASTING	EG ELEVATION	TOP ELEVATION	WL DIA.	℄ ELEVATION
8007	1687700.079	1731645.278	6968.63	6964.70	12" WL	6964.20
8008	1687709.523	1731632.507	6967.99	6964.20	12" WL	6963.67

POINT TABLE				
POINT #	NORTHING	EASTING	CL ELEVATION	DESCRIPTION
60	1687706.53	1731658.92	6964.20	90 BEND
61	1687700.20	1731659.01	ME	TIE POINT
62	1687706.14	1731632.76	ME	TIE POINT
63	1687703.80	1731643.63	6961.67 FF	VAULT CORNER
64	1687709.93	1731652.86	6961.77 FF	VAULT CORNER
65	1687702.78	1731642.64	6969.60RIM	VAULT LID

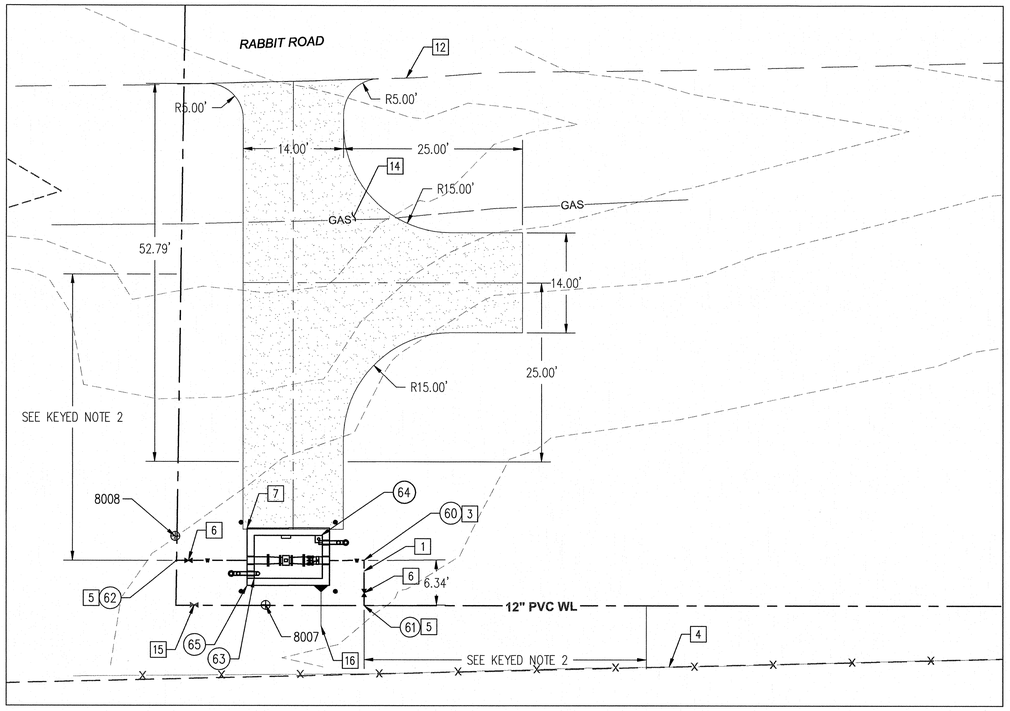

FLOW DIRECTION

1 CAMPO CONEJO SITE PLAN
SCALE: 1" = 10'

GENERAL NOTES

1. RESTRAIN ALL JOINTS.
2. MAXIMUM DEFLECTION ON PIPE JOINTS AS ALLOWED BY PIPE MANUFACTURER.
3. ALL NEW PIPE AND FITTINGS SHALL BE DUCTILE IRON PIPE, PRESSURE CLASS 200.
4. THE CONTRACTOR MUST PROVIDE ACCESS TO EACH HOUSEHOLD OR BUSINESS THROUGHOUT CONSTRUCTION ACTIVITIES. THE CONTRACTOR SHALL BE RESPONSIBLE FOR COORDINATING THIS ACTIVITY WITH THE RESPECTIVE PROPERTY OWNER OR RESIDENT.
5. VIBRATORY COMPACTION SHALL NOT BE USED WHEN CONSTRUCTION ACTIVITIES ARE WITHIN 100 FEET OF A RESIDENTIAL OR COMMERCIAL STRUCTURE.
6. DUCTILE IRON PIPE SHALL BE WRAPPED IN POLYETHYLENE ENCASEMENT
7. PIPELINE JOINTS SHALL BE RESTRAINED BY THE USE OF MEGA-LUG, FLEX-RING, OR EQUAL.
8. SOILS IN THE PROJECT AREA ARE ASSUMED TO BE ACCEPTABLE AS BACKFILL. UNSUITABLE EXCAVATION MATERIAL SHALL BE DISPOSED OF AND REPLACED WITH ENGINEERED FILL. A PROCTOR ANALYSIS SHALL BE CONDUCTED ON ONE REPRESENTATIVE SAMPLE AT EACH PROJECT SITE, AND BACKFILL SHALL BE TESTED FOR COMPACTION AND MOISTURE TO MEET DETAILED REQUIREMENTS. ALL TRENCHING AND EXCAVATION, IMPORTED ENGINEERED FILL, AND BACK FILL COSTS SHALL BE INCIDENTAL TO THE ASSOCIATED WL BID ITEM.
9. REPLACE ASPHALT PER NMSSPW STD DWG 2465A FOR WIDTHS LESS THAN 8' AND PER STD DWG 2405A FOR WIDTHS 8' OR GREATER.
10. A MECHANICAL RESTRAINT SYSTEM SHALL BE UTILIZED ON FITTINGS AND PIPING FOR THRUST RESTRAINT. CONCRETE THRUST BLOCKING SHALL BE USED ONLY FOR SPECIAL CONDITIONS. (E.G. CAPS WHERE MAIN WILL BE EXTENDED IN THE FUTURE) AS SPECIFICALLY APPROVED BY SFCU.
11. ALL FLANGED JOINTS WITH DISSIMILAR MATERIALS SHALL BE MADE USING A FLANGE INSULATION GASKET KIT, THAT INCLUDES AN INSULATING GASKET, BOLT SLEEVES, AND WASHERS SUCH AS PSI LINEBACKER.
12. PARK EQUIPMENT AND VEHICLES AS NOT TO INTERFERE WITH NORMAL ACTIVITIES OF RESIDENTS, BUSINESSES OR OTHER CONTRACTORS NEAR THE PROJECT SITE.
13. MAINTAIN ACCESS TO PRIVATE PROPERTIES, SCHOOLS AND BUSINESSES AT ALL TIMES DURING CONSTRUCTION.
14. ALL BURIED FLANGED JOINTS SHALL BE WRAPPED IN WAX TAPE COATING.

CONSTRUCTION NOTES:

1. EXISTING 12" PVC WL SHALL REMAIN IN-SERVICE AT ALL TIMES, EXCEPT DURING NON-PRESSURIZED TAPS FOR 8" WL TO VAULT.

KEYED NOTES:

1. 8" DUCTILE IRON PIPE, SEE DETAIL 1 ON DWG. D-02 FOR TYPICAL TRENCH DETAIL, RESTRAIN ALL JOINTS.
2. CONTRACTOR SHALL CONFIRM A MINIMUM OF 40' OF WATER LINE IS RESTRAINED. IF IT IS FOUND NOT TO BE RESTRAINED, THEN RESTRAINT SHALL BE INSTALLED TO MEET THIS RESTRAINT LENGTH, USING EBAA IRON MODEL 1900, OR ENGINEER APPROVED EQUAL.
3. 90 DEGREE HORIZONTAL BEND, (MJXMJ).
4. APPARENT ROW.
5. 12"X8" TAPPING SADDLE, ROMAC STAINLESS STEEL TAPPING TEE, MODEL STS420, OR ENGINEER APPROVED EQUAL, PRESSURIZED CONNECTION.
6. 8" DUCTILE IRON GATE VALVE, FLXFL, MUELLER MODEL 2360, OR ENGINEER APPROVED EQUAL.
7. METER VAULT, SEE DETAIL 1 ON DWG. D-01 FOR VAULT DETAILS.
12. EXISTING EDGE OF PAVEMENT.
14. ACCESS DRIVEWAY, PLACE AGGREGATE BASE COURSE ON 6" PREPARED SUBGRADE. FG = EG + 6".
15. EXISTING VALVE, NORMALLY OPEN (SFCU TO CLOSE ONCE METER VAULT IS OPERATIONAL).
16. GRADE TO DRAIN AROUND PERIMETER OF VAULT AT A MAX. OF 3:1 SLOPE.

ME = MATCH EXISTING
FF = FINISH FLOOR

N

10 5 0 10
1"=10'

CALL BEFORE YOU DIG
FOR UTILITY LOCATES
DIAL 811 OR
1-800-321-ALERT

SURVEY INFORMATION
FIELD NOTES
NO.

ENGINEER'S SEAL
JUAN CARLOS SAMANIEGO
NEW MEXICO
14832
PROFESSIONAL ENGINEER

NO.	DATE	REMARKS	BY

REVISIONS

DESIGN

DESIGNED BY:	JCS	DATE: 05/2015
DRAWN BY:	JJG	DATE: 05/2015
CHECKED BY:	TAB	DATE: 05/2015

Bohannan Huston
www.bhinc.com 800.877.5332

SANTA FE COUNTY UTILITIES (SFCU)

SFCU MASTER METER VAULTS

CAMPO CONEJO SITE PLAN

PROJECT NO.	DRAWING NO.	SHEET	OF
20150298	C-02	6	15

P:\20150298\WR\Design\plans\20150298_06_CampoConejoPnP.dwg
May 29, 2015 - 3:41pm
PDF_22x34

POT HOLE POINT TABLE						
POINT #	NORTHING	EASTING	EG ELEVATION	TOP ELEVATION	WL DIA.	℄ ELEVATION
8006	1681269.914	1715303.459	6601.90	6601.90	16" WL	6601.20

POINT TABLE				
POINT #	NORTHING	EASTING	℄ ELEVATION	DESCRIPTION
70	1681270.17	1715302.92	ME	TIE POINT
71	1681270.17	1715341.31	6601.00	90 BEND
72	1681240.17	1715341.35	6601.10	90 BEND
73	1681240.17	1715302.97	ME	TIE POINT
74	1681259.92	1715344.85	6598.67 FF	VAULT CORNER
75	1681250.42	1715338.86	6598.57 FF	VAULT CORNER
76	1681260.92	1715345.85	6608.00RIM	VAULT LID

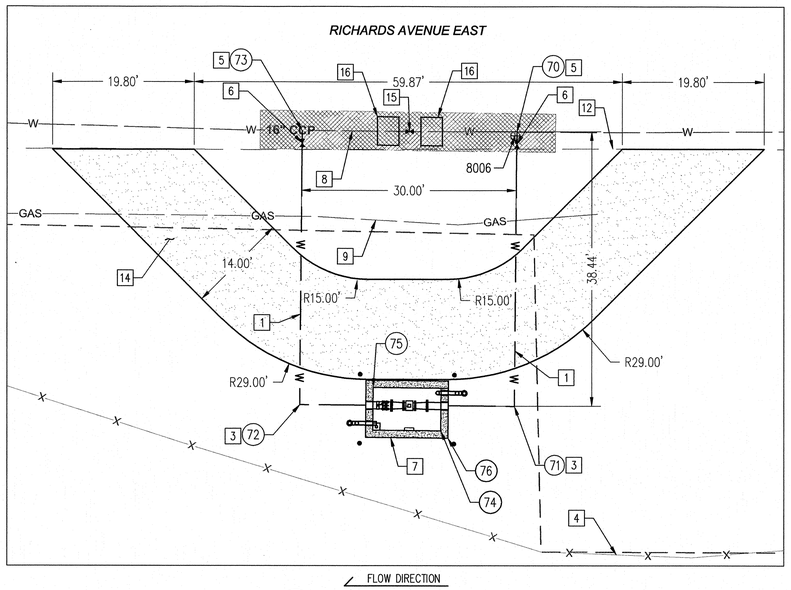

1 RICHARDS AVENUE SITE PLAN
SCALE: 1" = 10'

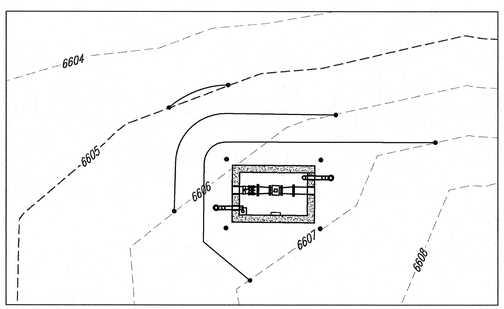

2 RICHARDS AVENUE GRADING PLAN
SCALE: 1" = 10'

GENERAL NOTES

1. RESTRAIN ALL JOINTS.
2. MAXIMUM DEFLECTION ON PIPE JOINTS AS ALLOWED BY PIPE MANUFACTURER.
3. ALL NEW PIPE AND FITTINGS SHALL BE DUCTILE IRON PIPE, PRESSURE CLASS 200.
4. THE CONTRACTOR MUST PROVIDE ACCESS TO EACH HOUSEHOLD OR BUSINESS THROUGHOUT CONSTRUCTION ACTIVITIES. THE CONTRACTOR SHALL BE RESPONSIBLE FOR COORDINATING THIS ACTIVITY WITH THE RESPECTIVE PROPERTY OWNER OR RESIDENT.
5. VIBRATORY COMPACTION SHALL NOT BE USED WHEN CONSTRUCTION ACTIVITIES ARE WITHIN 100 FEET OF A RESIDENTIAL OR COMMERCIAL STRUCTURE.
6. DUCTILE IRON PIPE SHALL BE WRAPPED IN POLYETHYLENE ENCASEMENT
7. PIPELINE JOINTS SHALL BE RESTRAINED BY THE USE OF FLEX-RING, OR EQUAL.
8. SOILS IN THE PROJECT AREA ARE ASSUMED TO BE ACCEPTABLE AS BACKFILL. UNSUITABLE EXCAVATED MATERIAL SHALL BE DISPOSED OF AND REPLACED WITH ENGINEERED FILL. A PROCTOR ANALYSIS SHALL BE CONDUCTED ON ONE REPRESENTATIVE SAMPLE AT EACH PROJECT SITE, AND BACKFILL SHALL BE TESTED FOR COMPACTION AND MOISTURE TO MEET DETAILED REQUIREMENTS. ALL TRENCHING AND EXCAVATION, IMPORTED ENGINEERED FILL, AND BACKFILL COSTS SHALL BE INCIDENTAL TO THE ASSOCIATED WL BID ITEM.
9. REPLACE ASPHALT PER NMDOT SPECIFICATIONS.
10. ALL FLANGED JOINTS WITH DISSIMILAR MATERIALS SHALL BE MADE USING A FLANGE INSULATION GASKET KIT, THAT INCLUDES AN INSULATING GASKET, BOLT SLEEVES, AND WASHERS SUCH AS PSI LINEBACKER.
11. PARK EQUIPMENT AND VEHICLES AS NOT TO INTERFERE WITH NORMAL ACTIVITIES OF RESIDENTS, BUSINESSES OR OTHER CONTRACTORS NEAR THE PROJECT SITE.
12. MAINTAIN ACCESS TO PRIVATE PROPERTIES, SCHOOLS AND BUSINESSES AT ALL TIMES DURING CONSTRUCTION.
13. ALL BURIED FLANGED JOINTS SHALL BE WRAPPED IN WAX TAPE COATING PER SPECIFICATION SECTION 09955 COLD APPLIED WAX TAPE COATING.

CONSTRUCTION NOTES:

1. EXISTING 16" CCP WL SHALL NOT BE SHUT-DOWN FOR CONSTRUCTION OF THIS PROJECT.
2. TAPS ON 16" CCP WL SHALL BE PRESSURIZED TAPS.
3. SADDLE TAPS ON EXISTING 16" CCP WL, PIPING AND FITTINGS TO AND FROM METER VAULT, AND PIPING WITHIN THE METER VAULT SHALL BE PRESSURE TESTED, DISINFECTED, AND ABLE TO SERVE AS A BYPASS PRIOR TO PERFORMING LINE STOPS AND VALVE INSTALLATION ON THE EXISTING 16" CCP WATER LINE.

KEYED NOTES:

1. 12" DUCTILE IRON PIPE, SEE DETAIL 2 ON DWG. D-02 FOR TYPICAL TRENCH DETAIL, RESTRAIN ALL JOINTS.
3. 90 DEGREE HORIZONTAL BEND, (MJXMJ).
4. APPARENT ROW.
5. 16"X12" TAPPING SADDLE, ROMAC STAINLESS STEEL TAPPING TEE, MODEL STS420, OR ENGINEER APPROVED EQUAL, PRESSURIZED CONNECTION.
6. 12" DUCTILE IRON GATE VALVE, FLXFL, MUELLER MODEL 2360, OR ENGINEER APPROVED EQUAL.
7. METER VAULT, SEE DETAIL 1 ON DWG. D-01 FOR VAULT DETAILS.
8. EXISTING 16" WL.
9. EXISTING 8" GAS LINE. CONTRACTOR TO VERIFY ELEVATION PRIOR TO BEGINNING ANY CONSTRUCTION.
12. EXISTING EDGE OF PAVEMENT.
14. ACCESS DRIVEWAY, PLACE FG = EG +6" AGGREGATE BASE COURSE ON 6" PREPARED SUBGRADE.
15. 16" BYPASS VALVE ON EXISTING WL, SEE DETAIL 1 ON DWG. D-02. INSTALL USING LINESTOP METHOD, SEE CONSTRUCTION NOTE 3, THIS SHEET.
16. THRUST BLOCKS, SEE DETAIL ON SHEET 1 ON SHEET D-02.

ME = MATCH EXISTING
FF = FINISH FLOOR

1"=10'

CALL BEFORE YOU DIG
FOR UTILITY LOCATES
DIAL 811 OR
1-800-321-ALERT

SURVEY INFORMATION
FIELD NOTES
NO.

ENGINEER'S SEAL
JUAN CALDERON SAMANIEGO
NEW MEXICO
19339
PROFESSIONAL ENGINEER

NO.	DATE	REMARKS REVISIONS	BY

DESIGN
DESIGNED BY: JCS DATE: 05/2015
DRAWN BY: JJG DATE: 05/2015
CHECKED BY: TAB DATE: 05/2015

Bohannan Huston
www.bhinc.com 800.877.5332

SANTA FE COUNTY UTILITIES (SFCU)

SFCU MASTER METER VAULTS

RICHARDS AVENUE EAST SITE AND GRADING PLAN

PROJECT NO.	DRAWING NO.	SHEET	OF
20150298	C-03	7	15

P:\20150298\WR\Design\plans\20150298_07_RichardsAveEPnP.dwg
May 29, 2015 - 3:29pm
PDF_22x34

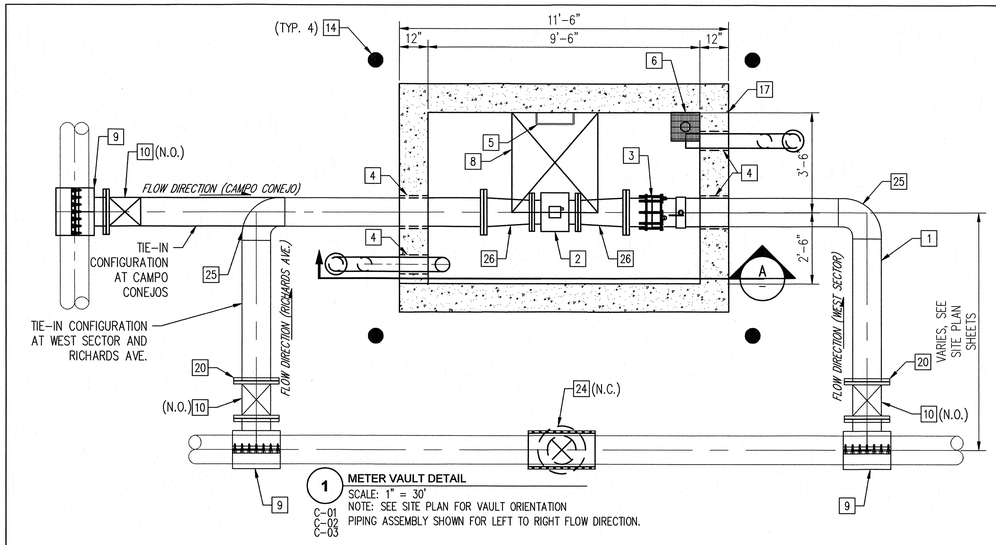

1 METER VAULT DETAIL
SCALE: 1" = 30'
NOTE: SEE SITE PLAN FOR VAULT ORIENTATION
C-01 C-02 C-03 PIPING ASSEMBLY SHOWN FOR LEFT TO RIGHT FLOW DIRECTION.

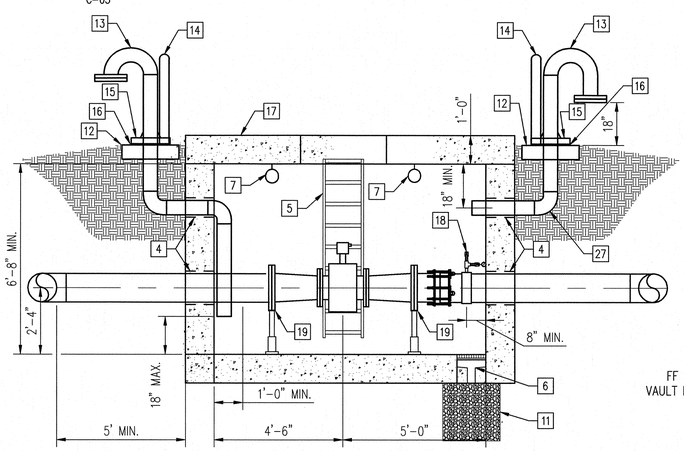

PIPING ASSEMBLY SHOWN FOR LEFT TO RIGHT FLOW DIRECTION.

A METER VAULT SECTION
D-01
SCALE: 1" = 30'

TABLE NO. 1

Site	Magnetic Flow Meter (MFG. DATA) Size, In.	Lay Length,	Accurate(*) Flow Range, GPM Min. Flow	Max. Flow	Bypass Piping Size In.
West Sector	10	19.7	25	10,021	12
Campo Conejo	6	15.8	7.8	3,141	8
Richards Ave. East	8	15.8	15.7	6,278	12

ALL DIMENSIONS GIVEN IN INCHES

* ± 0.25 percent of rate for velocities greater than 1.64 ft/s (0.50 m/s), ± 0.004 ft/s (± 1 mm/s) for velocities less than 1.64 ft/s (0.50 m/s)

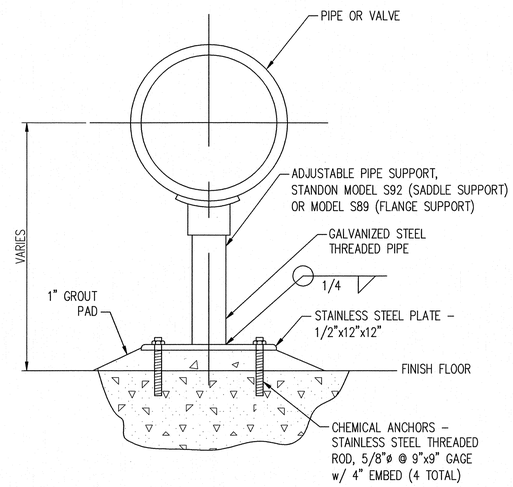

NOTE: PIPE SUPPORT SHALL BE AS MANUFACTURED BY STANDON OR APPROVED EQUAL.

3 PIPE SUPPORT DETAIL
D-01
SCALE: N.T.S.

GENERAL NOTES

1. ALL JOINTS SHALL BE RESTRAINED.
2. PRECAST CONCRETE METER VAULT SHALL BE DESIGNED TO ACCOMMODATE LIFTING, TRANSPORT, AND SERVICE CONDITIONS. THE VAULT DESIGN MUST BE STAMPED BY A PROFESSIONAL ENGINEER REGISTERED IN THE STATE OF NEW MEXICO. VAULT FLOOR SHALL BE SLOPED TO DRAIN TO SUMP AT A MAX. OF 2%.
3. ACCESS HATCH SHALL BE HALLIDAY PRODUCTS, SERIES H1W, OR EQUAL.
4. N.C. = NORMALLY CLOSED, N.O. = NORMALLY OPEN

KEYED NOTES:

1. CLASS 200, DUCTILE IRON PIPE.
2. FLOW METER, BADGER M2000, WITH AWWA 150# FLANGES. SEE TABLE NO. 1.
3. RESTRAINED FLANGED COUPLING ADAPTOR, ROMAC RFCA DOWNSTREAM SIDE OF FLOW METER.
4. WALL PENETRATION, SEE DETAIL 2, THIS SHEET.
5. ACCESS LADDER, SEE DETAIL 4, THIS SHEET.
6. 12"X12"X4" DEEP FLOOR DRAIN, WITH STEEL GRATE FLUSH WITH VAULT FLOOR, WITH 4" DIA. DRAIN TO PEA GRAVEL POCKET.
7. 2" GALVANIZED STEEL EQUIPMENT LIFTING EYE,DIRECTLY ABOVE WL CL.
8. 3'X3.5' ACCESS CLEAR OPENING, WITH ACCESS HATCH, CENTERED ON METER.
9. STAINLESS STEEL TAPPING SLEEVE, SIZED TO EXISTING WATERLINE, WITH OUTLET (FL).
10. RESILIENT WEDGE GATE VALVE (FLXFL).
11. 3'X3'X3' PEA GRAVEL, WRAPPED IN FILTER FABRIC.
12. 2'X2'X6" 4000 PSI CONCRETE PAD.
13. 6" SCH. 40 GALVANIZED STEEL VENT WITH STAINLESS STEEL INSECT SCREEN. INSTALL SCREEN BETWEEN (2) OPEN FLANGES, WELD NUT TO BOLT.
14. 4" BOLLARDS, STATIONARY POSTS PER NMSSPW STD. DWG. 2250, PAINTED SAFETY YELLOW
15. 6" FLANGE, INSTALL USING 1/2" BOLTS WITH HILTI ANCHORS TO CONCRETE PAD.
16. 1/2" GAP, TYP. BETWEEN GOOSENECK AND BURIED PIPE.
17. PRE-CAST CONCRETE VAULT.
18. 2" SADDLE TAP, PRESSURE GAUGE ASSEMBLY. SEE DETAIL 4, SHEET D-02, ON DOWNSTREAM SIDE OF FLOW METER.
19. PIPE SUPPORT, SEE DETAIL 3, THIS SHEET.
20. MEGA FLANGE ADAPTER.
24. BYPASS VALVE (SEE PLAN AND PROFILE SHEETS).
25. 90° BEND, MJXMJ.
26. REDUCER, FLXFL.
27. PVC, SCH. 40.

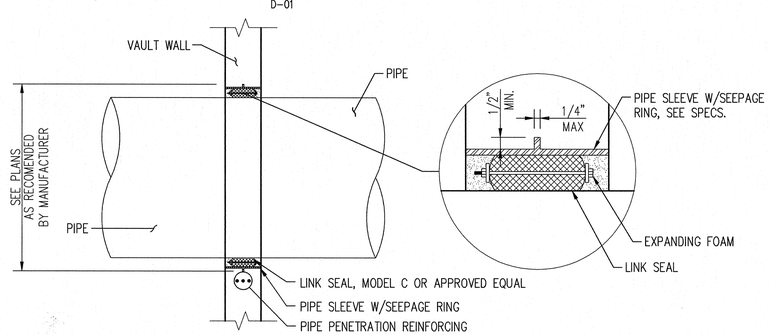

2 LINK SEAL DETAIL
D-01
SCALE: 1/2" = 1'-0"

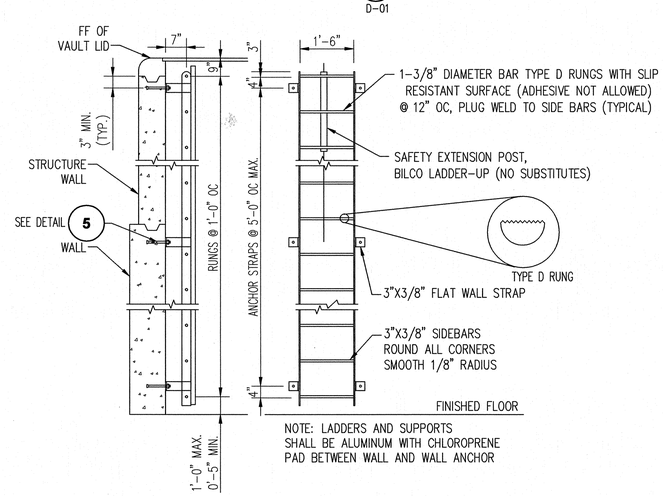

NOTE: LADDERS AND SUPPORTS SHALL BE ALUMINUM WITH CHLOROPRENE PAD BETWEEN WALL AND WALL ANCHOR

4 LADDER DETAIL
D-01
SCALE: 1/2" = 1'-0"

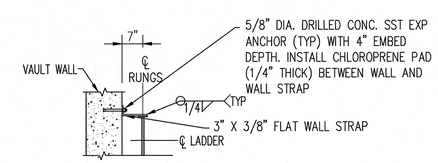

NOTE: LADDER AND SUPPORTS SHALL BE ALUMINUM.

5 LADDER ANCHOR DETAIL
D-01
SCALE: 1/2" = 1'-0"

30' 15' 0 30'
1"=30'
0 1' 2' 4'
1/2"=1'-0"

CALL BEFORE YOU DIG
FOR UTILITY LOCATES
DIAL 811 OR
1-800-321-ALERT

SURVEY INFORMATION
FIELD NOTES
NO.

ENGINEER'S SEAL
JUAN CARLOS SAMANIEGO
NEW MEXICO
19839
PROFESSIONAL ENGINEER

NO.	DATE	REMARKS	BY
		REVISIONS	

DESIGN
DESIGNED BY: JCS DATE: 05/2015
DRAWN BY: JJG DATE: 05/2015
CHECKED BY: TAB DATE: 05/2015

Bohannan Huston
www.bhinc.com 800.877.5332

SANTA FE COUNTY

SANTA FE COUNTY UTILITIES (SFCU)

SFCU MASTER METER VAULTS

TYPICAL VAULT PLAN, SECTION AND DETAILS

PROJECT NO.	DRAWING NO.	SHEET	OF
20150298	D-01	8	15

P:\20150298\WR\Design\plans\20150298_08_TypVaultPnPDets.dwg
May 29, 2015 - 3:43pm
PDF_22x34

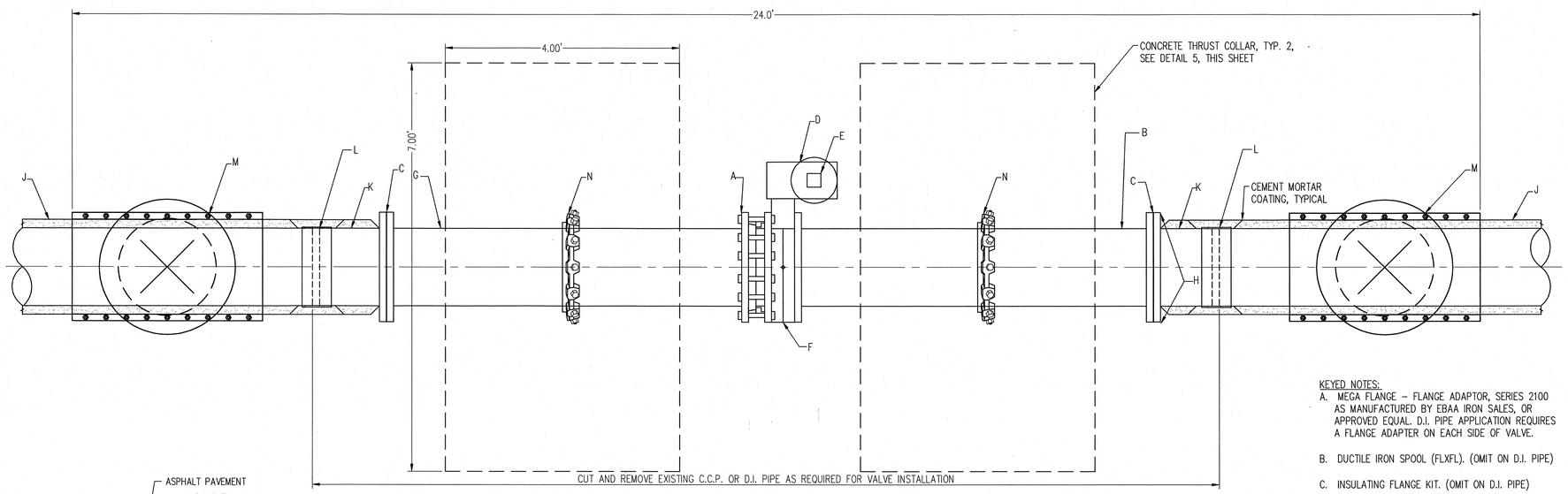

1 **BUTTERFLY VALVE INSTALLATION IN EXISTING C.C.P. OR D.I. PIPELINE DETAIL**
SCALE: 1" = 1.0'

KEYED NOTES:

A. MEGA FLANGE – FLANGE ADAPTOR, SERIES 2100 AS MANUFACTURED BY EBAA IRON SALES, OR APPROVED EQUAL. D.I. PIPE APPLICATION REQUIRES A FLANGE ADAPTER ON EACH SIDE OF VALVE.

B. DUCTILE IRON SPOOL (FLXFL). (OMIT ON D.I. PIPE)

C. INSULATING FLANGE KIT. (OMIT ON D.I. PIPE)

D. VALVE BOX AND COVER PER APWA STD. DWG 2328 AND 2326.

E. 2" SQUARE OPERATING NUT.

F. BUTTERFLY VALVE (FLXFL), SIZE AS SHOWN ON DRAWINGS.

G. DUCTILE IRON SPOOL (FLXPE). (OMIT ON D.I. PIPE)

H. COAT ALL EXPOSED STEEL SURFACES WITH BITUMASTIC. ALL BURIED FLANGES AND HARDWARE SHALL BE COATED WITH WAX TAPE COATING, PER SUPPLEMENTAL TECHNICAL SPECIFICATION 9955.

J. EXISTING C.C.P. OR D.I. PIPE.

K. 1'-0" LONG STEEL SPOOL (FLXPE).

L. BUTTSTRAP. (OMIT ON D.I. PIPE), SEE DETAIL 7, THIS SHEET.

M. LINESTOP TAPPING TEE,(TO REMAIN IN PLACE) HYDRASTOPPER STAINLESS STEEL, AS MANUFACTURED BY HYDRA-STOP, OR ENGINEER APPROVED EQUAL

N. SPLIT RING RESTRAINT, EBAA IRON SERIES 1100SDB, OR ENGINEER APPROVED EQUAL

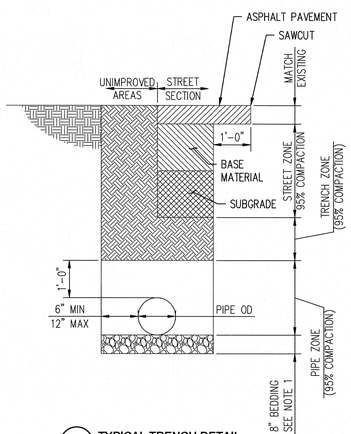

2 **TYPICAL TRENCH DETAIL**
SCALE: N.T.S.

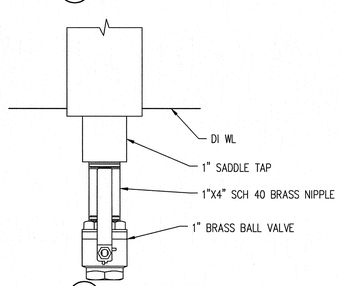

3 **DRAIN VALVE DETAIL**
SCALE: N.T.S.

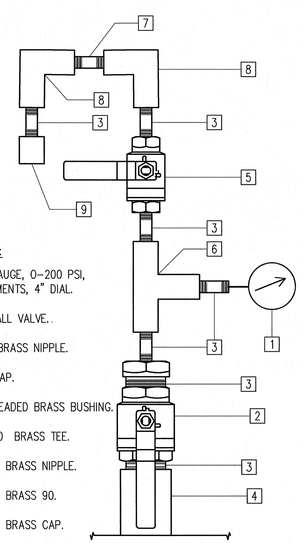

KEYED NOTES:

1. PRESSURE GAUGE, 0-200 PSI, 5 PSI INCREMENTS, 4" DIAL.
2. 2" BRASS BALL VALVE..
3. 2" SCH. 40 BRASS NIPPLE.
4. 2" SADDLE TAP.
5. 2"X1/2" THREADED BRASS BUSHING.
6. 1/2" SCH. 40 BRASS TEE.
7. 1/2" SCH 40 BRASS NIPPLE.
8. 1/2" SCH 40 BRASS 90.
9. 1/2" SCH 40 BRASS CAP.

4 **PRESSURE SENSOR ASSEMBLY**
SCALE: N.T.S.

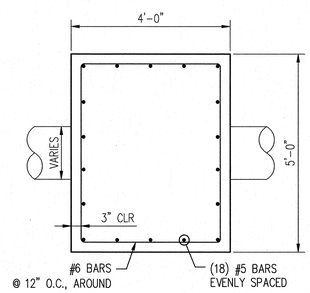

5 **THRUST COLLAR**
SCALE: N.T.S.

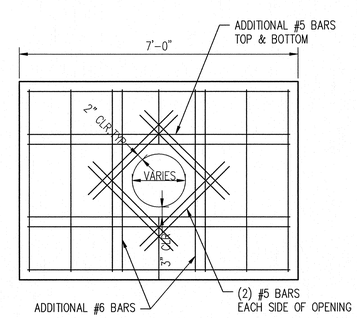

6 **THRUST COLLAR, SECTION**
SCALE: N.T.S.

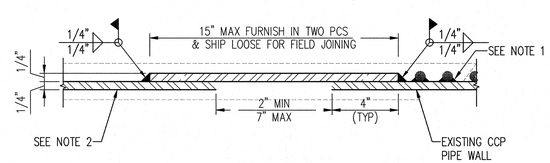

7 **BUTT STRAP JOINT DETAILS**
SCALE: N.T.S.

NOTES

1. CCP PIPE SPIRAL WOUND STEEL REINFORCEMENT, TO BE CUT BACK TO ALLOW FOR BUTTSTRAP INSTALLATION. REINFORCEMENT SHALL BE WELDED TO PIPE WALL PRIOR TO CUTTING WITH A MIN. 8" LONG FILLET WELD, WITH A WELD 1/2 OF THE DIAMETER OF THE REINFORCEMENT, ALONG EACH SIDE, ON TWO CONSECUTIVE WINDS.
2. NEW STEEL PIPE OUTSIDE DIAMETER SHALL MATCH EXISTING CCP PIPE WALL OUTSIDE DIAMETER, +/- 1/16".

CALL BEFORE YOU DIG
FOR UTILITY LOCATES
DIAL 811 OR
1-800-321-ALERT

SURVEY INFORMATION
FIELD NOTES

NO.	

ENGINEER'S SEAL

ADAM CLAYBURN SAMANIEGO
NEW MEXICO
18835
PROFESSIONAL ENGINEER

NO.	DATE	REMARKS	BY

REVISIONS

DESIGN

DESIGNED BY:	JCS	DATE: 05/2015
DRAWN BY:	JJG	DATE: 05/2015
CHECKED BY:	TAB	DATE: 05/2015

Bohannan Huston
www.bhinc.com 800.877.5332

SANTA FE COUNTY UTILITIES (SFCU)

SFCU MASTER METER VAULTS

CIVIL DETAILS

PROJECT NO.	DRAWING NO.	SHEET	OF
20150298	D-02	9	15

P:\20150298\WR\Design\plans\20150298_09_CivilDet.dwg
May 29, 2015 – 3:44pm
PDF_22x34

GENERAL ELECTRICAL NOTES:

1. IF ANY UTILITY LINES, PIPELINES OR UNDERGROUND UTILITY LINES ARE SHOWN ON THESE DRAWINGS THEY ARE SHOWN IN AN APPROXIMATE MANNER ONLY, AND SUCH LINES MAY EXIST WHERE NONE ARE SHOWN. IF ANY SUCH LINES ARE SHOWN, THE LOCATION IS BASED ON INFORMATION PROVIDED BY THE UTILITY OR PIPELINE COMPANY, THE OWNER OR OTHERS, AND THE INFORMATION MAY BE INCOMPLETE, OR MAY BE OBSOLETE BY THE TIME CONSTRUCTION COMMENCES.
2. ELECTRICAL CONTRACTOR IS RESPONSIBLE TO VERIFY AND CONFIRM THAT EQUIPMENT SUBMITTED WILL FIT WITHIN THE ALLOTTED SPACE REQUIREMENTS SHOWN ON THE PLANS. IF ANY SPACE OR SIZE DISCREPANCIES ARE ANTICIPATED IT IS THE ELECTRICAL CONTRACTOR'S RESPONSIBILITY TO NOTIFY THE ENGINEER PRIOR TO SUBMITTAL. ONCE THE SUBMITTALS HAVE BEEN APPROVED IT IS THE ELECTRICAL CONTRACTOR'S RESPONSIBILITY TO INSTALL THE EQUIPMENT WITHIN THE ALLOTTED SPACE AT NO ADDITIONAL COST TO THE OWNER.
3. CONDUIT INSTALLATIONS SHALL BE INSTALLED IN A MANNER TO PREVENT CONFLICTS WITH EQUIPMENT AND STRUCTURAL CONDITIONS. EXPOSED CONDUITS SHALL BE INSTALLED PARALLEL OR PERPENDICULAR TO BEAMS AND WALLS.
4. CONDUITS SHALL BE TERMINATED SO AS TO PERMIT NEAT CONNECTIONS TO ENCLOSURES AND OTHER EQUIPMENT.
5. NO CONDUIT SMALLER THAN 3/4" PIPE NOR WIRE SMALLER THAN NO. 12 AWG SHALL BE USED UNLESS OTHERWISE NOTED.
6. THE WIRING DIAGRAMS, BLOCK DIAGRAMS, QUANTITY, SIZE OF WIRES, AND CONDUIT REPRESENT A SUGGESTED ARRANGEMENT BASED UPON SELECTED STANDARD COMPONENTS OF ELECTRICAL EQUIPMENT. MODIFICATIONS ACCEPTABLE TO THE ENGINEER MAY BE MADE BY THE CONTRACTOR TO ACCOMMODATE EQUIPMENT ACTUALLY PURCHASED. THE BASIC SEQUENCE AND METHOD OF CONTROL MUST BE MAINTAINED AS INDICATED ON THE DRAWINGS AND/OR SPECIFIED.
7. LIGHTING FIXTURES SHALL BE MOUNTED ACCORDING TO THE MOUNTING HEIGHT GIVEN ON THE DRAWINGS. THE MOUNTING HEIGHT SHALL BE MEASURED FROM THE BOTTOM OF THE LIGHTING TO FINISHED GRADE.
8. ALL CONDUIT INSTALLATIONS TO HAVE 24" MIN. BURY. CONDUIT ROAD CROSSINGS TO HAVE CONCRETE ENCASEMENT WHERE SHOWN ON THE PLAN LAYOUTS. ALL CONDUITS TO HAVE 6" METALLIC ELECTRIC WARNING TAPE INSTALLED 12" BELOW FINISHED GRADE.
9. ALL CONDUCTORS AND DEVICES TO HAVE A PROPER GROUNDING SYSTEM INSTALLED PER NEC 250. ALL FEEDER AND BRANCH CONDUITS ARE TO BE CONSTRUCTED WITH A PROPERLY COORDINATED GROUND CONDUCTOR SIZE FOR EACH BRANCH CIRCUIT.
10. CONDUCTORS IN DIRECT SOLAR EXPOSURE MUST BE DERATED USING A 140 DEGREE AMBIENT TEMPERATURE. THE CONTRACTOR IS RESPONSIBLE FOR REVISING CONDUCTOR SIZE BASED ON ACTUAL CONDUIT ROUTING.
11. EXTERIOR LIGHTING SHALL COMPLY WITH THE NEW MEXICO NIGHT SKY PROTECTION ACT OUTDOOR LIGHTING ORDINANCE IN THAT ALL FIXTURES WILL BE FULL CUT-OFF AND HAVE LESS THAN SEVENTY (70) LUMENS PER SQUARE FOOT AT GROUND LEVEL.
12. ALL 90 DEGREE ELBOWS IN DIRECT BURIED OR CONCRETE ENCASED UNDERGROUND CONDUIT DUCTBANK SYSTEM SHALL BE PVC COATED GALVANIZED RIGID STEEL. ALL PVC SCH. 80 CONDUIT SHALL END APPROXIMATELY 10'-0" FROM ALL PULLBOXES, EQUIPMENT OR HANDHOLES AND BE COMPLETED WITH PVC COATED GALVANIZED RIGID STEEL CONDUIT TO THE RESPECTIVE PIECE OF EQUIPMENT.
13. ALL RIGID CONDUIT LOCATED LOCATED INSIDE BUILDING SHALL BE NON-METALLIC SCHEDULE 80 PVC. ALL ELECTRICAL JUNCTION BOXES, OUTLET BOXES, SWITCH BOXES AND RELATED FITTINGS, ADAPTERS AND HARDWARE LOCATED INSIDE DISINFECTION PROCESS BUILDING SHALL BE NON-METALLIC PVC.
14. ALL SHIELDED CABLES SHALL BE INSTALLED IN RIGID STEEL CONDUIT OR PVC COATED RIGID STEEL CONDUIT BASED ON THE NEMA RATING OF THE AREA.
15. ALL CONDUITS ENTERING NEMA 4X BOXES, CONTROL STATIONS OR OTHER EQUIPMENT RATED NEMA 4X SHALL BE TERMINATED AT THE BOX WITH A MEYERS HUB OR EQUAL.
16. PRIOR TO SUBMITTING A BID FOR ELECTRICAL WORK, THE ELECTRICAL CONTRACTOR SHALL VISIT THE SITE OF THE PROPOSED CONSTRUCTION AND SHALL THOROUGHLY ACQUAINT HIMSELF WITH EXISTING UTILITIES AND WORKING CONDITIONS TO BE ENCOUNTERED, ETC. ALLOWANCE WILL NOT BE MADE FOR NON-COMPLIANCE WITH THIS CONDITION AFTER BIDDING.
17. ELECTRICAL DRAWINGS IDENTIFY UTILITY SERVICE REQUIREMENTS FOR POWER WITHIN AND UP TO FIVE FEET OUTSIDE THE STRUCTURE. UTILITY CONDUIT SYSTEMS PULL BOXES, AND OTHER STRUCTURES, WHERE SHOWN ON THE SITE PLAN INDICATE THE PREFERRED ROUTING. THE ELECTRICAL CONTRACTOR SHALL REFER TO UTILITY SERVICE DRAWINGS FOR ACTUAL UTILITY SERVICE REQUIREMENTS FOR THIS PROJECT. UTILITY SYSTEMS SHALL BE CONSTRUCTED IN ACCORDANCE WITH THE APPROVED UTILITY SERVICE DRAWINGS.
18. THE DRAWINGS INDICATE THE GENERAL ARRANGEMENT AND LOCATIONS OF THE ELECTRICAL WORK. INFORMATION PRESENTED ON THESE DRAWINGS ARE AS ACCURATE AS PLANNING CAN DETERMINE, BUT FIELD VERIFICATION OF ALL DIMENSIONS, LOCATIONS, LEVELS, ETC., TO SUIT FIELD CONDITIONS IS REQUIRED. REVIEW ALL ARCHITECTURAL AND STRUCTURAL DRAWINGS AND ADJUST ALL WORK TO MEET THE REQUIREMENTS OF CONDITIONS SHOWN. THE ARCHITECTURAL DRAWINGS SHALL TAKE PRECEDENCE OVER ALL OTHER DRAWINGS. DISCREPANCIES BETWEEN DIFFERENT PLANS, OR BETWEEN DRAWINGS AND SPECIFICATIONS, OR REGULATIONS AND CODES SHALL BE BROUGHT TO THE ATTENTION OF THE ENGINEER IN WRITING BEFORE THE DATE OF BID OPENING. WHERE DISCREPANCIES OR CONFLICTS OCCUR, THE BID SHALL REFLECT THE MOST STRINGENT REQUIREMENTS. ELECTRICAL CONTRACTOR SHALL BE RESPONSIBLE TO FIELD MEASURE AND CONFIRM MOUNTING HEIGHTS AND LOCATION OF ELECTRICAL EQUIPMENT. DO NOT SCALE DISTANCES OFF THE ELECTRICAL DRAWINGS. USE ACTUAL DIMENSIONS.
19. UPON COMPLETION OF THE WORK UNDER THESE DRAWINGS AND SPECIFICATIONS, THE ELECTRICAL CONTRACTOR SHALL PROVIDE THE OWNER WITH A COMPLETE SET OF MARKED-UP ELECTRICAL DRAWINGS SHOWING THE "AS-BUILT" CONDITION OF THE WORK. BOND PRINTS OF THE DRAWINGS REQUIRED WILL BE FURNISHED BY THE OWNER, FOR THIS PURPOSE.
20. PERFORM THE EXCAVATION, CUTTING, FITTING, REPAIRING AND FINISHING OF THE WORK NECESSARY FOR THE INSTALLATION OF ELECTRICAL EQUIPMENT HOWEVER, NO CUTTING OF THE WORK OF OTHER TRADES OR OF ANY STRUCTURAL MEMBER SHALL BE DONE WITHOUT THE CONSENT OF THE ENGINEER.
21. PERFORM ALL EXCAVATION AND BACKFILLING REQUIRED FOR WORK PERFORMED UNDER THIS DIVISION OF THE SPECIFICATIONS. TRENCH BOTTOMS SHALL BE GRADED TRUE AND FREE FROM STONES OR SOFT SPOTS. USE EXCAVATED MATERIALS FOR BACKFILL UNLESS OFF SITE MATERIALS ARE DEEMED NECESSARY BY THE ENGINEER. TRENCHING AND BACKFILLING FOR ELECTRICAL AND TELEPHONE UTILITY SERVICES TO BUILDING SHALL BE PROVIDED BY THE ELECTRICAL CONTRACTOR IN ACCORDANCE WITH UTILITY COMPANY REQUIREMENTS. PROVIDE MINIMUM 95% COMPACTION FOR BACKFILL.
22. COVER METALLIC CONDUIT IN CONTACT WITH EARTH OR FILL, WITH POLYETHYLENE TAPE SPIRAL WRAPPED, 1/2" LAPPED TO PROVIDE DOUBLE THICKNESS. TAPE SHALL BE SCOTCH NO. 50 TAPE. CONDUIT AND DUCTS NOT UNDER BUILDINGS AND FEEDER DUCTS SHALL BE INSTALLED PER NEC 300.5, EXCEPT THAT THE BENDS IN CONDUIT LARGER THAN 1" IN DIAMETER SHALL BE MADE WITH GALVANIZED STEEL CONDUIT TREATED AS NOTED ABOVE. MAKE JOINTS WITH COMPOUND TO BE WATERTIGHT.
23. ALL EMPTY CONDUIT SYSTEMS SHALL HAVE A 210 POUND TEST PULL CORD INSTALLED TO FACILITATE INSTALLATION OF FUTURE WIRE.
24. PENETRATION THROUGH FLOOR SLABS WHERE SUBJECT TO DAMAGE SHALL BE IN WRAPPED RIGID STEEL. SCHEDULE 40 PVC ELBOWS AND PENETRATIONS MAY BE USED IN SLAB ON GRADE WHERE PENETRATIONS OCCUR IN PROTECTED AREAS (WALLS, ELECTRICAL ROOMS, ETC.).
25. FLEXIBLE METALLIC AND NON-METALLIC CONDUIT SYSTEMS SHALL HAVE A CODE SIZED COPPER GROUND CONDUCTOR. INCREASE CONDUIT SIZE AS REQUIRED.
26. ALL RECEPTACLE AND LIGHTING CONDUITS SHALL BE INSTALLED WITHIN BUILDING CMU WALLS. ALL RECEPTACLE AND LIGHT SWITCH BOXES SHALL BE RECESSED INTO WALL SPACE AND FLUSH MOUNTED WITH WALL PLATES.
27. ALL CONDUIT INFRASTRUCTURE AND FOUNDATIONS TO BE INSTALLED FOR ELECTRICAL UTILITY EQUIPMENT SHALL BE INSPECTED AND APPROVED BY UTILITIES CONSTRUCTION PERSONNEL PRIOR TO BACKFILL OF ANY MATERIALS.

SYMBOLS LEGEND

NOTE: SOME SYMBOLS/ ABBREVIATIONS MAY NOT BE USED.

ONE-LINE

- 100 / 3/P — CIRCUIT BREAKER
  - 100A – TRIP RATING
  - 3P – NUMBER OF POLES
- E 1200AF / 800AT — LOW VOLTAGE AIR CIRCUIT BREAKER
  - E – INDICATES ELECTRICAL
  - M – INDICATES MECHANICAL
  - 1200AF – FRAME RATING
  - 800AT – TRIP RATING
- DRAWOUT CIRCUIT BREAKER
- 240V / 50KVA / 120V — TRANSFORMER
  - 240V – PRIMARY VOLTAGE
  - 50KVA – RATING
  - 120V – SECONDARY VOLTAGE
- K13 — SHIELDED TRANSFORMER
  - K13 DENOTES K-RATING
- 300:5 (2) — CURRENT TRANSFORMER
  - 300:5 – INDICATES CT RATIO
  - (2) – INDICATES QUANTITY
- 2 — POTENTIAL TRANSFORMER
  - NUMBER "2" DENOTES QUANTITY
- 60A — SINGLE THROW DISCONNECT
  - 60A – AMPERAGE RATING
  - 3P – NUMBER OF POLES
- FUSE
- GROUND CONNECTION
- M — TRANSFER SWITCH
  - "M" DENOTES MANUAL
- SURGE ARRESTOR
- SPD — SURGE PROTECTION DEVICE

CONDUIT AND CONDUCTORS

- A-1,3 — HOMERUN TO INDICATED PANEL "A". HASH MARKS INDICATE NUMBER OF WIRES. WIRES ARE #12 AWG UNLESS OTHERWISE NOTED. ANY CIRCUIT WITHOUT HASH MARKS INDICATED 2-WIRE CIRCUIT. NUMBERS "1,3" INDICATED BRANCH CIRCUIT NUMBER. ALL RUNS TO INCLUDE GROUND WIRE.
- LINE
- NEUTRAL
- GROUND
- CONTROL
- SHIELDED CONDUCTOR
- SWITCHED CONDUCTOR
- EXISTING CONDUIT ROUTED UNDERGROUND OR CONCEALED
- NEW CONDUIT ROUTED CONCEALED IN WALL OR CEILING
- NEW CONDUIT EMBEDDED OR UNDER BUILDING SLAB
- FLEXIBLE CONDUIT
- CONDUIT TURNED DOWN
- CONDUIT TURNED UP
- CONDUIT CAPPED
- B — BUSWAY
- G — GROUNDING CONDUCTOR
- CABLE TRAY
- T — TELEPHONE CONDUIT
- D — DATA CONDUIT
- FA — FIRE ALARM CONDUIT
- CATV — CABLE TV CONDUIT
- OHE — OVERHEAD PRIMARY ELECTRIC
- S — OVERHEAD SECONDARY ELECTRIC
- UPE — UNDERGROUND PRIMARY ELECTRIC
- USE — UNDERGROUND SECONDARY SERVICE ELECTRIC
- UGE — UNDERGROUND GENERAL ELECTRIC
- AERIAL TERMINAL
- GROUND ROD

CONTROLS

- FIELD WIRING TERMINAL
- OFF ON — ON – OFF SELECTOR SWITCH
- MOMENTARY TYPE PUSHBUTTON CONTROL (FUNCTION AS LABELED)
- ES — EMERGENCY STOP PUSHBUTTON CONTROL STATION MOMENTARY TYPE W/LOCK-OUT DEVICE
- H O A — HAND-OFF-AUTOMATIC SELECTOR SWITCH
- L R — LOCAL-REMOTE SELECTOR SWITCH
- *CR # — CONTROL RELAY
  - # DESIGNATES CONTROL CIRCUIT
  - * SEQUENTIAL PREFIX FOR CIRCUIT IN WHICH DEVICE USED MORE THAN ONCE
- X# — NORMALLY OPEN — RELAY CONTACT COIL
- X# — NORMALLY CLOSED — RELAY CONTACT COIL
- PUSH TO TEST PILOT LIGHT
  - A = AMBER, G = GREEN, R = RED, ETC.
- R — PILOT LIGHT, NON-PUSH TO TEST. COLORS SAME AS ABOVE
- FS-# — FLOW SWITCH # (NO CLOSES ON INCREASING FLOW)
- FS-# — FLOW SWITCH # (NC OPENS ON INCREASING FLOW)
- PS-# — PRESSURE SWITCH # (NO CLOSES ON RISING PRESSURE)
- PS-# — PRESSURE SWITCH # (NC OPENS ON RISING PRESSURE)
- ZS-# — POSITION SWITCH # (LIMIT SWITCH). CLOSES IN HIGH POSITION, IE VALVE FULL OPEN, UNLESS NOTED OTHERWISE ON THE CONTROL SCHEMATIC
- ZS-# — POSITION SWITCH # (LIMIT SWITCH). CLOSES IN LOW POSITION, IE VALVE FULL CLOSE, UNLESS NOTED OTHERWISE ON THE CONTROL SCHEMATIC
- LS-# — LEVEL SWITCH # (NO CLOSES ON RISING LEVEL)
- LS-# — LEVEL SWITCH # (NC OPENS ON RISING LEVEL)
- TEMP SWITCH # (NO CLOSES ON RISING LEVEL)
- TEMP SWITCH # (NC OPENS ON RISING LEVEL)
- TDR TDOE — NORMALLY OPEN TIME DELAY CLOSE ON ENERGIZE
- TDR TDOE — NORMALLY CLOSED TIME DELAY OPEN ON ENERGIZE
- PLC COMMAND
- PLC I/O......................
  - DI — DISCRETE INPUT
  - DO — DISCRETE OUTPUT
  - AI — ANALOG INPUT
  - AO — ANALOG OUTPUT

LIGHTING

- A a — STRIP SURFACE FLUORESCENT CEILING FIXTURE
  - A FIXTURE TYPE
  - a SWITCH DESIGNATION
- WALL MOUNTED FIXTURE
- POLE MOUNTED LIGHT FIXTURE
- PHOTOELECTRIC CELL

CLASSIFICATION

- NEMA 4X — ALL PANELS, STARTERS, DISCONNECTS, WIRING DEVICES ETC. WITHIN THE ROOM/ SPACE NOTED TO HAVE ENCLOSURES WITH NEMA TYPE # ENCLOSURES (EXCEPT AS SPECIFICALLY NOTED)

DEVICES

- LPA-5 — DUPLEX RECEPTACLE – GFI
  - LPA-5 – INDICATES CKT. (TYP)
- EP — DUPLEX RECEPTACLE
  - EP – EXPLOSION PROOF
  - WP – WEATHERPROOF
- DOUBLE DUPLEX RECEPTACLE
- J — CODE SIZE J-BOX
- J — WALL MOUNTED CODE SIZE J-BOX
- F — FUSIBLE DISCONNECT SWITCH
- NON-FUSIBLE DISCONNECT SWITCH
- MOTOR STARTER
- COMBINATION MOTOR STARTER/DISCONNECT SWITCH
- 5 — MOTOR CONNECTION – "5" DENOTES HORSEPOWER
- F — MOTOR CONNECTION – "F" DENOTES HORSEPOWER IS FRACTIONAL. SEE MECH. SCHEDULE FOR H.P. SIZE
- M — MOTOR-MAY BE ELECTRIC, HYDRAULIC OR PNUEMATIC
- $a — SINGLE POLE SWITCH, "a" INDICATES CONTROL CIRCUIT DESTINATION
- $3 — THREE-WAY SINGLE POLE SWITCH
- $4 — FOUR-WAY SINGLE POLE SWITCH
- $T — MANUAL MOTOR STARTER SWITCH W/THERMAL OVERLOAD PROTECTION

SPECIAL SYSTEMS

- DC — DOOR CONTACTS
- CAMERA

POWER DISTRIBUTION EQUIPMENT

- EXISTING OVERHEAD POWER POLE
- NEW OVERHEAD POWER POLE
- SWITCHBOARD OR MCC
- FLUSH MOUNTED PANELBOARD
- SURFACE MOUNTED PANELBOARD
- UPE — UNDERGROUND PRIMARY ELECTRIC
- STANDARD PULL BOX
- UTILITY PULL BOX
- PADMOUNT PRIMARY TRANSFORMER

CONDUIT TAGS AND DESCRIPTIONS

- P/I-### — CONDUIT NUMBER
- POWER AND CONTROL WIRES;
  - P-POWER WIRES ONLY
  - I-INSTRUMENTATION OR CONTROL WIRES ONLY
- XX-### — DESIGNATES INSTRUMENT (REFER TO P&ID LEGEND SHEET FOR ADDITIONAL DETAILS)

CALL BEFORE YOU DIG
FOR UTILITY LOCATES
DIAL 811 OR
1-800-321-ALERT

SURVEY INFORMATION	FIELD NOTES
NO.	

ENGINEER'S SEAL

MATTHEW R. THOMPSON — NEW MEXICO — 13868 — REGISTERED PROFESSIONAL ENGINEER — 5-28-15

NO.	DATE	REVISIONS	REMARKS	BY

DESIGN		
DESIGNED BY: LLM	DATE: 01/2015	
DRAWN BY: ETF	DATE: 01/2015	
CHECKED BY: MRT	DATE: 01/2015	

Bohannan ▲ Huston
www.bhinc.com 800.877.5332

SANTA FE COUNTY UTILITIES (SFCU)

SFCU WATER METER VAULTS
ON-CALL
ELECTRICAL GENERAL NOTES AND LEGEND

PROJECT NO.	DRAWING NO.	SHEET
20150298	E-01	10 OF 15

P:\20150298\LC\Drawings\Plans\20150298_E1_Legend.dwg
May 28, 2015 – 1:39pm
PDF_22x34

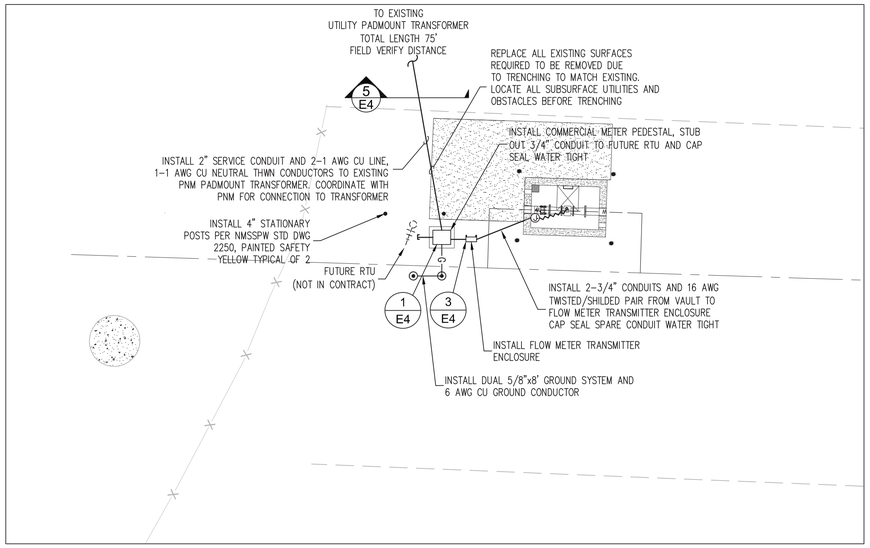

WEST SECTOR
PROJECT SITE
SCALE: 1"=10'

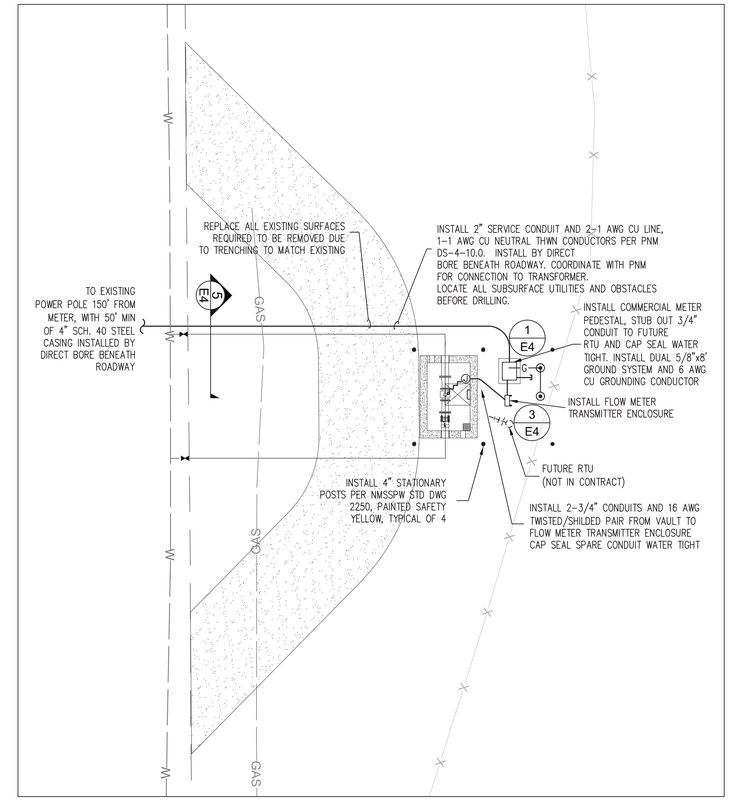

RICHARDS EAST
PROJECT SITE
SCALE: 1"=10'

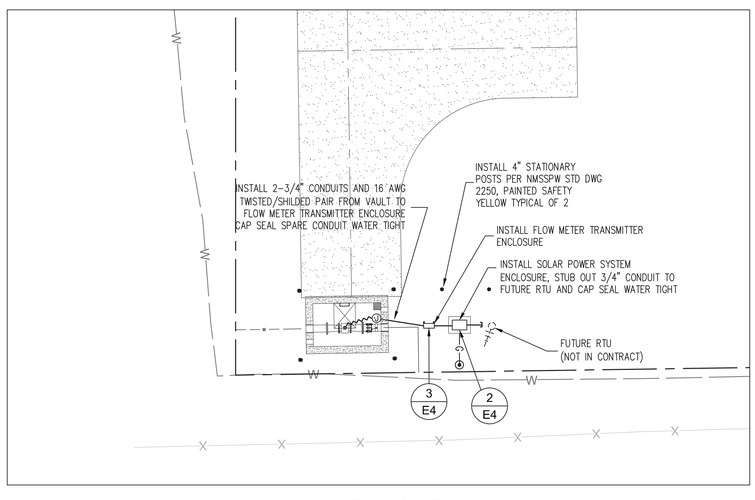

CAMPO CONEJO
PROJECT SITE
SCALE: 1"=10'

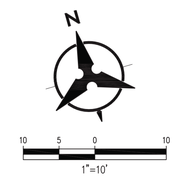

CALL BEFORE YOU DIG
FOR UTILITY LOCATES
DIAL 811 OR
1-800-321-ALERT

SURVEY INFORMATION
FIELD NOTES
NO.

ENGINEER'S SEAL
REGISTERED MATTHEW R. THOMPSON NEW MEXICO 13860 PROFESSIONAL ENGINEER
5-28-15

NO.	DATE	REMARKS	BY

REVISIONS

DESIGN

DESIGNED BY:	LLM	DATE: 01/2015
DRAWN BY:	ETF	DATE: 01/2015
CHECKED BY:	MRT	DATE: 01/2015

Bohannan Huston
www.bhinc.com 800.877.5332

SANTA FE COUNTY UTILITIES (SFCU)

SFCU WATER METER VAULTS
ON-CALL
ELECTRICAL SITE PLANS

PROJECT NO.	DRAWING NO.	SHEET	OF
20150298	E-02	11	15

P:\20150298\LC\Drawings\Plans\20150298_E2_Elec Site Plans.dwg
May 28, 2015 - 1:48pm
PDF_22x34

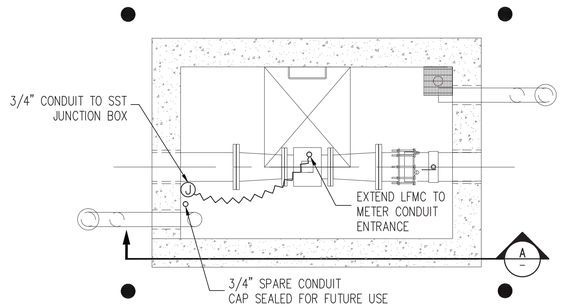

1 METER VAULT DETAIL
SCALE: 1" = 30'
10-E-02

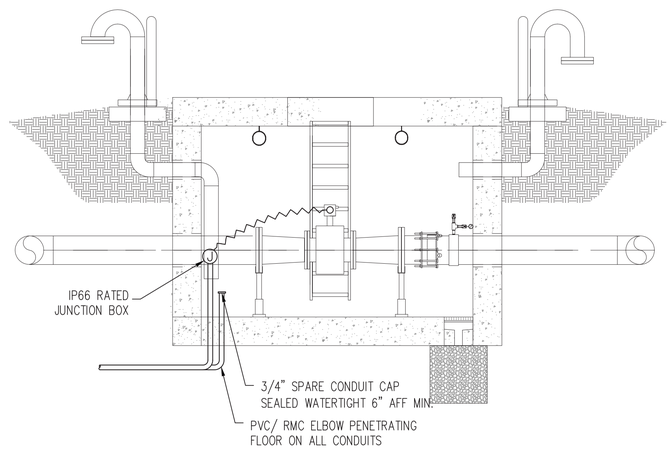

A METER VAULT SECTION
SCALE: 1" = 30'
10-E-02

CALL BEFORE YOU DIG
FOR UTILITY LOCATES
DIAL 811 OR
1-800-321-ALERT

SURVEY INFORMATION
FIELD NOTES

NO.	

ENGINEER'S SEAL

MATTHEW R. THOMPSON
NEW MEXICO
13869
PROFESSIONAL ENGINEER
5-28-15

NO.	DATE	REMARKS REVISIONS	BY

DESIGN

DESIGNED BY:	LLM	DATE: 01/2015
DRAWN BY:	ETF	DATE: 01/2015
CHECKED BY:	MRT	DATE: 01/2015

Bohannan Huston
www.bhinc.com 800.877.5332

SANTA FE COUNTY UTILITIES (SFCU)

SFCU WATER METER VAULTS
ON-CALL
TYPICAL VAULT, PLAN AND SECTION, ELECTRICAL DETAILS

PROJECT NO.	DRAWING NO.	SHEET
20150298	E-03	12 OF 15

P:\20150298\LC\Drawings\Plans\20150298_E3_TypVaultPnPDets.dwg
May 28, 2015 - 1:49pm
PDF_22x34

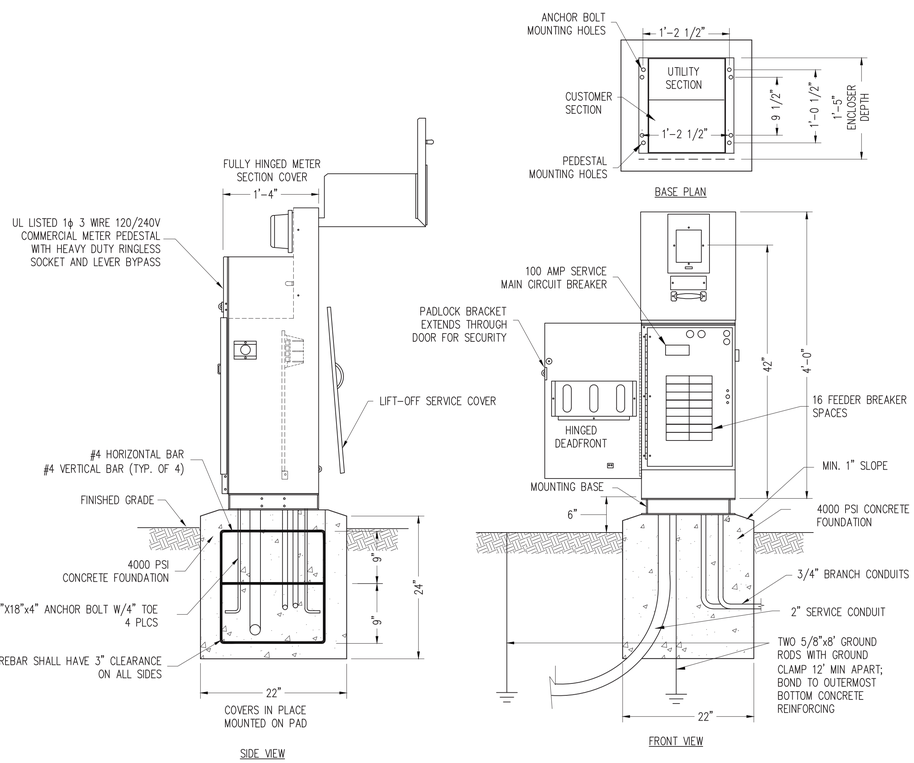

1 COMMERCIAL SERVICE PEDESTAL PER PNM MS-5-6.0
SCALE: N.T.S.
10-E-02

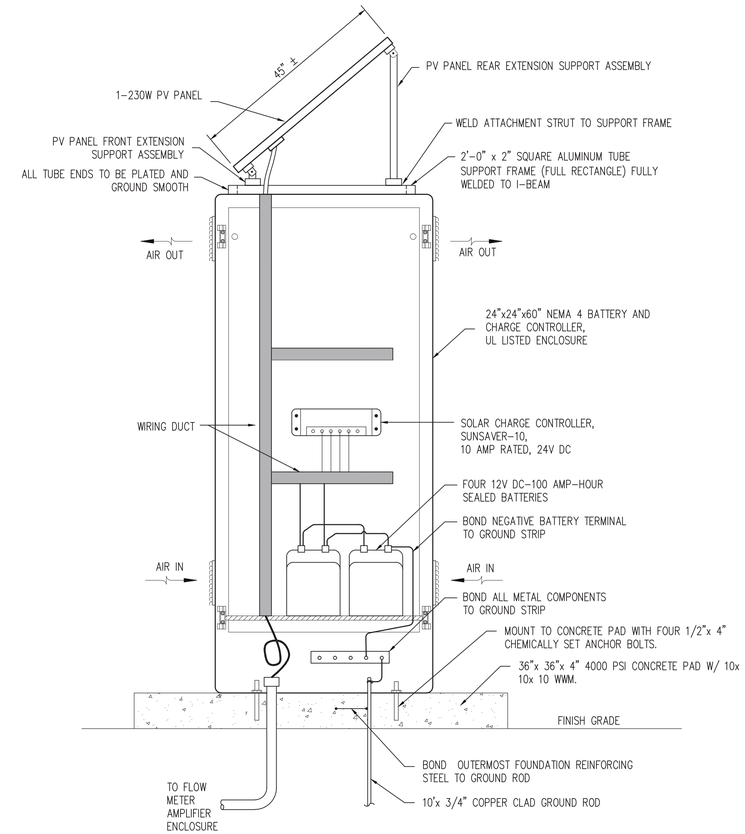

2 SOLAR POWER SYSTEM ENCLOSURE
SCALE: N.T.S.
10-E-02

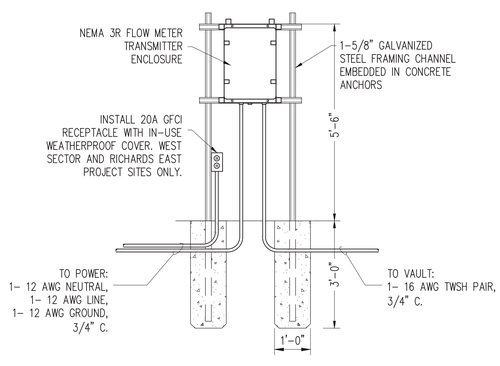

3 FLOW METER AMPLIFIER ENCLOSURE DETAIL
SCALE: N.T.S.
10-E-02

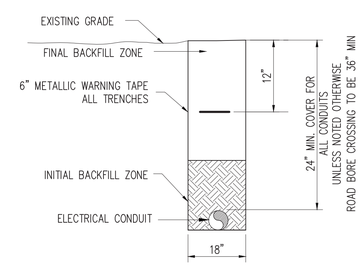

5 TRENCHING DETAIL
SCALE: N.T.S.
10-E-02

CALL BEFORE YOU DIG
FOR UTILITY LOCATES
DIAL 811 OR
1-800-321-ALERT

SURVEY INFORMATION
FIELD NOTES
NO.

ENGINEER'S SEAL
MATTHEW R. THOMPSON
NEW MEXICO
13861
REGISTERED PROFESSIONAL ENGINEER
5-28-15

NO.	DATE	REMARKS	BY
		REVISIONS	

DESIGN

DESIGNED BY:	LLM	DATE: 01/2015
DRAWN BY:	ETF	DATE: 01/2015
CHECKED BY:	MRT	DATE: 01/2015

Bohannan Huston
www.bhinc.com 800.877.5332

SANTA FE COUNTY UTILITIES (SFCU)

SFCU WATER METER VAULTS
ON-CALL
ELECTRICAL DETAILS

PROJECT NO.	DRAWING NO.	SHEET	OF
20150298	E-04	13	15

P:\20150298\LC\Drawings\Plans\20150298_E4_Details.dwg
May 28, 2015 - 1:51pm
PDF_22x34

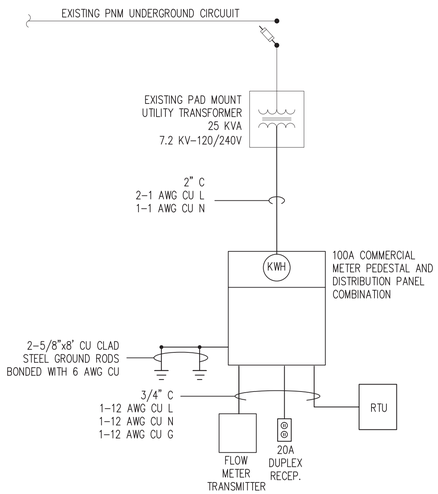

1 WEST SECTOR ONE LINE DIAGRAM
SCALE: N.T.S.
10-E-02

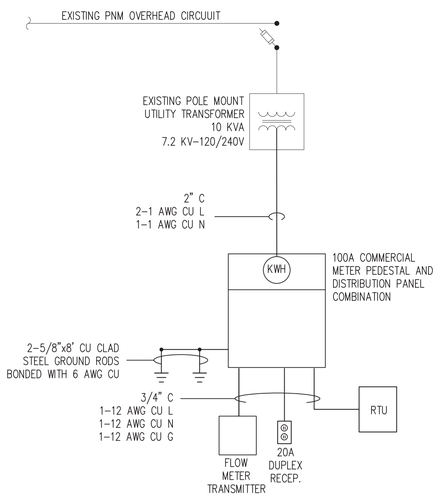

2 RICHARDS EAST ONE LINE DIAGRAM
SCALE: N.T.S.
10-E-02

Source - Cooper/Bussman - Simple Approach to Short Circuit Calculations, Bulletin EDP-1

Point to Point Short Circuit Calculations

Project ID : 120/240 RICHARDS EAST SERVICE	Date - 05/27/15	
Test	Single Phase System	
(Assumes infinite primary fault current available)		
Power Co. Transformer (T1) =		
Transformer KVA >>	10	
Transformer Impedance (%Z) >>	1.20	
Voltage (line to line) >>	240	
Voltage (line to Neutral) >>	120	
Transformer full load amps =	42	
Available Fault current from system =	3,472	
Motor contribution >>		<< (Motor full load current X 4)
If available fault current is known, Enter Here >>		
Available Fault amps at transformer secondary lugs L-L =	**3,472**	
Available Fault amps at transformer secondary lugs L-N =	**5,208**	
Fault Point 1	Point 1 >> Description >>	METER PEDESTAL
Distance from Point No. 1 >>	50	
Conductor size >>	1	
No. of conductors per phase >>	1	
(C)u.or (A)l.wire + (M)agnetic or (N)on-magnetic conduit >>	CN	Copper Conductors, Non-Magnetic Conduit
Available Fault amps at Point No. 1 (L-L) =	**2,910**	Minimum Equipment Rating 10kAIC
Available Fault amps at Point No. 1 (L-N) =	**3,298**	

4 FAULT CURRENT SUMMARY RICHARDS EAST
SCALE: N.T.S.
10-E-02

Source - Cooper/Bussman - Simple Approach to Short Circuit Calculations, Bulletin EDP-1

Point to Point Short Circuit Calculations

Project ID : 120/240 WEST SECTOR SERVICE	Date - 05/27/15	
Test	Single Phase System	
(Assumes infinite primary fault current available)		
Power Co. Transformer (T1) =		
Transformer KVA >>	25	
Transformer Impedance (%Z) >>	1.20	
Voltage (line to line) >>	240	
Voltage (line to Neutral) >>	120	
Transformer full load amps =	104	
Available Fault current from system =	8,681	
Motor contribution >>		<< (Motor full load current X 4)
If available fault current is known, Enter Here >>		
Available Fault amps at transformer secondary lugs L-L =	**8,681**	
Available Fault amps at transformer secondary lugs L-N =	**13,021**	
Fault Point 1	Point 1 >> Description >>	METER PEDESTAL
Distance from Point No. 1 >>	50	
Conductor size >>	1	
No. of conductors per phase >>	1	
(C)u.or (A)l.wire + (M)agnetic or (N)on-magnetic conduit >>	CN	Copper Conductors, Non-Magnetic Conduit
Available Fault amps at Point No. 1 (L-L) =	**5,855**	Minimum Equipment Rating 10kAIC
Available Fault amps at Point No. 1 (L-N) =	**5,319**	

5 FAULT CURRENT SUMMARY WEST SECTOR
SCALE: N.T.S.
10-E-02

ELECTRICAL SERVICE LOAD SUMMARY
SANTA FE COUNTY MASTER METERS

120/240 VOLT, 1 PHASE CONNECTED LOAD	FLA	KVA
PANELBOARD H1 - LIFT STATION		
FLOW METER	0.5	0.1
GENERAL RECEPTACLE	2.2	0.5
RTU (FUTURE)	2.0	0.5
TOTAL CONNECTED LOAD	**5.0**	**1.0**

DEMAND LOAD SUMMARY:	ESTIMATED DEMAND (%)	ESTIMATED DEMAND (KVA)
PANELBOARD H1 - LIFT STATION		
FLOW METER	125%	0.15
GENERAL RECEPTACLE	100%	1
RTU (FUTURE)	125%	1
FEEDER RATING:	KVA =	1.3
	AMPS =	2
	VOLTS =	120/240

FEEDER CIRCUIT BREAKER RATING (AMPS) =	100
PHASE CONDUCTOR =	1/0 AL
NEUTRAL CONDUCTOR =	1/0 AL
CONDUIT =	2"
VOLTAGE =	240
ASSUMED MAXIMUM KVA DEMAND =	1.3

6 LOAD SUMMARY RICHARDS EAST AND WEST SECTOR
SCALE: N.T.S.
10-E-02

PANEL SCHEDULE FOR WEST SECTOR PROJECT SITE AND RICHARDS EAST PROJECT SITE
Ratings: 120/240 VAC, 1 phase, 3 Wire 100 AMP MCB, integrated into meter pedestal, 10kAIC

CIRCUIT#	DESCRIPTION	CB SIZE	VA	Phase A	Phase B	VA	CB SIZE	DESCRIPTION	CIRCUIT#
1	GENERAL RECPECTACLE	20A/1P	180	180		60	20A/1P	FLOW METER	2
3	FUTURE RTU	20A/1P	360		360	0	20A/1P	SPARE	4
5	SPACE	***	0	180		0	***	SPACE	6
7	SPACE	***	0		0	0	***	SPACE	8
9	SPACE	***	0	180		0	***	SPACE	10
11	SPACE	***	0		0	0	***	SPACE	12
13	SPACE	***	0	0		0	***	SPACE	14
15	SPACE	***	0		0	0	***	SPACE	16
	Total Connected Load			180	360	Estimated Demand			
	Phase Demand Load			**180**	**360**				
	Total Demand Load				**540**				
	Feeder Voltage				**240**				
	Feeder Amps				**2**				

7 PANEL SCHEDULE RICHARDS EAST AND WEST SECTOR
SCALE: N.T.S.
10-E-02

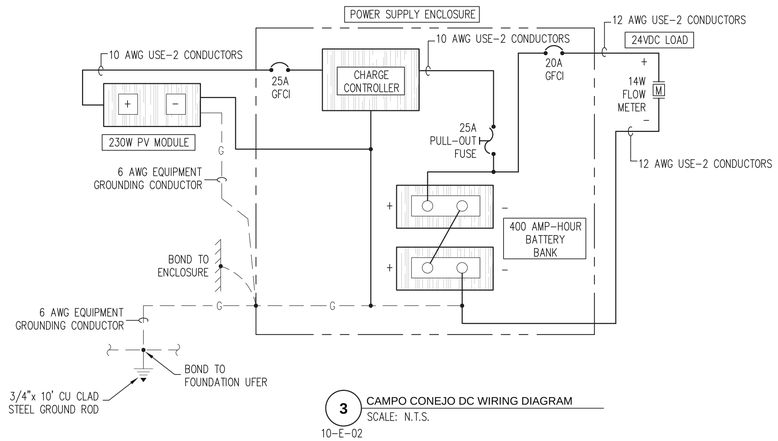

3 CAMPO CONEJO DC WIRING DIAGRAM
SCALE: N.T.S.
10-E-02

CALL BEFORE YOU DIG
FOR UTILITY LOCATES
DIAL 811 OR
1-800-321-ALERT

SURVEY INFORMATION
FIELD NOTES
NO.

ENGINEER'S SEAL
REGISTERED MATTHEW R. THOMPSON NEW MEXICO 13869 PROFESSIONAL ENGINEER
5-28-15

NO.	DATE	REMARKS	BY
		REVISIONS	

DESIGN

		DATE:
DESIGNED BY:	LLM	01/2015
DRAWN BY:	ETF	01/2015
CHECKED BY:	MRT	01/2015

Bohannan Huston
www.bhinc.com 800.877.5332

SANTA FE COUNTY UTILITIES (SFCU)

SFCU WATER METER VAULTS
ON-CALL
ELECTRICAL ONE-LINES AND SCHEDULES

PROJECT NO.	DRAWING NO.	SHEET	OF
20150298	E-05	14	15

P:\20150298\LC\Drawings\Plans\20150298_E5_Schedules.dwg
May 28, 2015 - 1:53pm
PDF_22x34

NOTE: TRAFFIC CONTROL PLANS MUST BE APPROVED B Y THE APPROPRIATE AUTHORITY (NMDOT OR SANTA FE COUNTY PRIOR TO WORK).

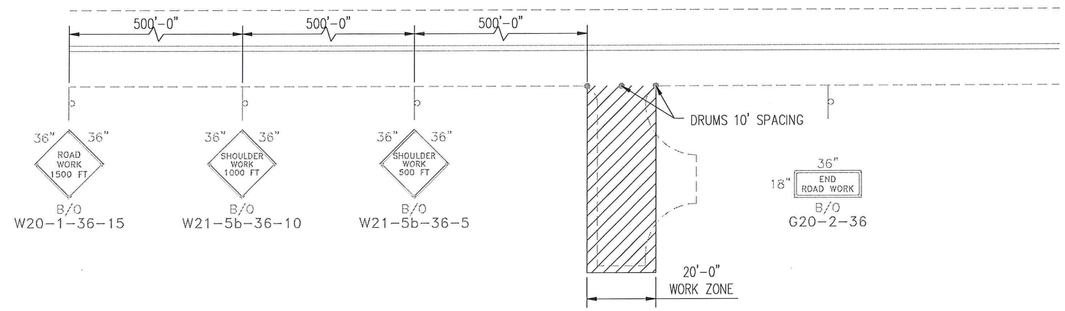

TYPICAL TRAFFIC CONTROL DETAIL
RABBIT ROAD
(CAMPO CONEJO PROJECT SITE)
N.T.S.
POSTED SPEED 40 MPH

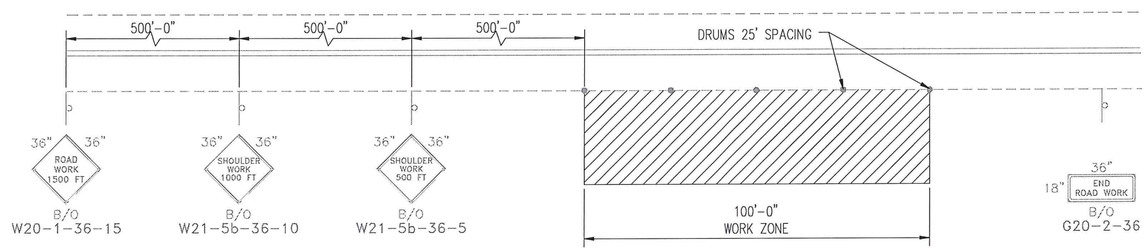

TYPICAL TRAFFIC CONTROL DETAIL
RICHARDS ROAD
(RICHARDS AVE PROJECT SITE)
N.T.S.
POSTED SPEED 40 MPH

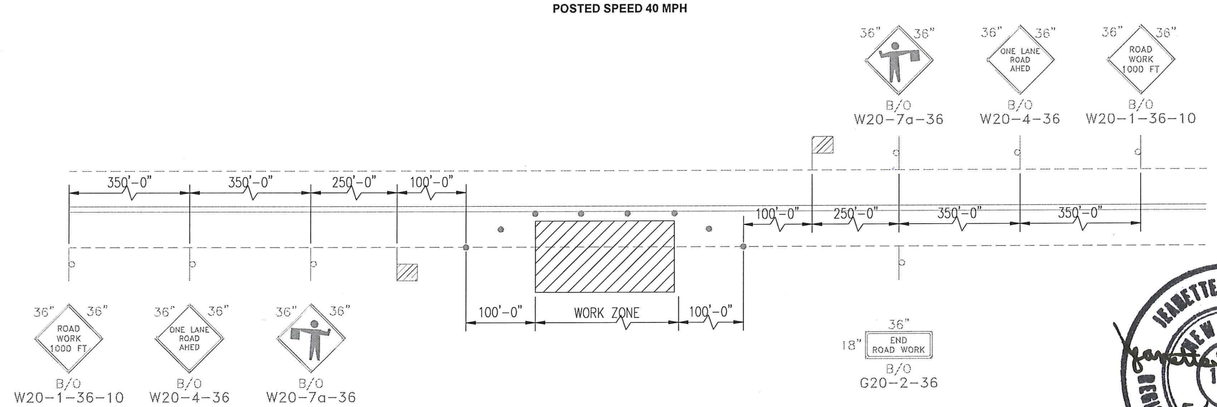

TYPICAL FLAGGER DETAIL
USE FOR DRIVEWAY CONNECTION
N.T.S.

JEANETTE A. WALTHER
NEW MEXICO
11243
5/29/15
REGISTERED PROFESSIONAL ENGINEER

CALL BEFORE YOU DIG
FOR UTILITY LOCATES
DIAL 811 OR
1-800-321-ALERT

SURVEY INFORMATION
FIELD NOTES

NO.	

ENGINEER'S SEAL

NO.	DATE	REMARKS	BY

REVISIONS

DESIGN

DESIGNED BY:	JW	DATE: 03/2015
DRAWN BY:	NJS	DATE: 03/2015
CHECKED BY:	JW	DATE: 03/2015

Bohannan Huston
www.bhinc.com
800.877.5332

SANTA FE COUNTY UTILITIES (SFCU)

SFCU WATER METER VAULTS
TRAFFIC CONTROL PLAN

PROJECT NO.	DRAWING NO.	SHEET	OF
20150298		15	15

P:\20150298\TRANS\Design\Plan Production\Plans\20150298TC01.dwg
May 18, 2015 - 1:29pm
TC-01