8/19/2025 1:23:22 PM

C:\Users\mangeles\Documents\2502_SFC Hondo Fire Station_mangeles547K3.rvt

SFC HONDO FIRE STATION - REMODEL

645 OLD LAS VEGAS HIGHWAY, SANTA FE, NM 87505

AUGUST 15, 2025

100% CONSTRUCTION DOCUMENTS



NOTE:
IMAGE IS CONCEPTUAL IN NATURE AND MAY NOT DEPICT THE REQUIREMENTS OF THE DRAWINGS AND SPECIFICATIONS

DRAWING INDEX

GENERAL		
G-001	COVER SHEET, PROJECT DIRECTORY	
G-002	CODE ANALYSIS, EGRESS PLAN	
CIVIL		
CG-01	CIVIL GENERAL NOTES AND LEGEND	
C-001	SITE DEMOLITION PLAN	
C-101	SITE PAVING PLAN	
C-201	SITE GRADING PLAN	
CD-01	EXISTING DRAINAGE PLAN	
CD-02	PROPOSED DRAINAGE PLAN	
C-301	SITE UTILITY PLAN	
C-501	CIVIL DETAILS	
STRUCTURAL		
S-001	NOTES	
S-002	NOTES	
S-003	NOTES	
S-100	OVERALL FOUNDATION PLAN	
S-101	LEVEL 1 ENLARGED PLAN	
S-102	ROOF ENLARGED PLAN	
S-200	ELEVATIONS	
S-201	SECTIONS	
S-300	FOUNDATION DETAILS	
S-301	FOUNDATION DETAILS	
S-310	CONCRETE DETAILS	
S-500	STEEL DETAILS	
S-501	STEEL DETAILS	
S-502	STEEL DETAILS	
S-510	COLD FORMED FRAMING DETAILS	
S-320	SLAB REPAIR DETAIL	

ARCHITECTURAL		
A-001	STANDARD ARCH ABBRV SYMBOLS & GEN NOTES	
AD101	FIRST FLOOR DEMOLITION PLAN	
AD111	FIRST FLOOR REFLECTED DEMOLITION CEILING PLAN	
AD121	DEMOLITION PLAN	
AD201	EXTERIOR DEMOLITION BUILDING ELEVATIONS	
A-101	FIRST FLOOR PLAN - OVERALL	
A-101A	FIRST FLOOR PLAN - AREA A	
A-111A	FIRST FLOOR REFLECTED CEILING PLAN	
A-121A	OVERALL ROOF PLAN	
A-201	EXTERIOR BUILDING ELEVATIONS	
A-301	BUILDING SECTIONS	
A-311	WALL SECTIONS	
A-401	ENLARGED PLANS	
A-402	INTERIOR ELEVATIONS	
A-403	INTERIOR ELEVATIONS	
A-411	CASEWORK ELEVATIONS AND SECTIONS	
A-501	MISCELLANEOUS DETAILS	
A-502	STEEL DETAILS	
A-511	CEILING DETAILS	
A-521	ROOF DETAILS	
A-531	DOOR & WINDOW DETAILS	
A-601	DOOR SCHEDULE, DOOR & FRAME TYPES, SIGN TYPES	
A-701	FIRST FLOOR FINISH PLAN	

FIRE PROTECTION		
FP-101	FIRE PROTECTION	
PLUMBING		
P-001	PLUMBING LEGEND & GENERAL NOTES	
PD101	PLUMBING DEMOLITION PLAN	
P-101	WASTE & VENT PLAN	
P-102	DOMESTIC WATER PLAN	
P-601	PLUMBING SCHEDULES	
MECHANICAL		
M-001	MECHANICAL LEGEND & GENERAL NOTES	
MD101	MECHANICAL DEMOLITION PLAN	
M-101	HVAC PLAN	
M-501	MECHANICAL DETAILS	
M-601	MECHANICAL SCHEDULES	
ELECTRICAL		
E-001	ELECTRICAL LEGEND, GEN NOTES, FIXTURE SCHEDULE, IECC CALCS	
ED101	ELECTRICAL DEMOLITION PLAN	
E-101	LIGHTING PLAN	
E-102	POWER PLAN	
E-103	MECHANICAL EQUIPMENT CONNECTION PLAN	
E-104	SPECIAL SYSTEMS PLAN	
E-601	RISER DIAGRAM, SERVICE CALCS	
E-602	PANEL SCHEDULES	


PROJECT LOCATION
Las Vegas Hwy
Agua Fria St
Old Las Vegas Hwy
Santa Fe River
Siler Rd
Rodeo Rd
Cerrillos Rd
Agua Fria St
Siringo Rd
Richards Ave
Santa Fe Trail
Siringo Rd
Cerrillos Rd
Santa Fe Trail
Richards Ave
Agua Fria St
Siringo Rd
Cerrillos Rd
Agua Fria St
Siringo Rd
Richards Ave
Santa Fe Trail

8/19/2025 11:08:48 AM

C:\Users\mangeles\Documents\2502_SFC Hondo Fire Station_mangeles547K3.rvt

OCCUPANCY GROUP LEGEND

OCCUPANCY GROUPS

- GROUP B
- GROUP R-1
- GROUP U

OCCUPANCY USE	AREA
GROUP B	
Business	6,300 SF
GROUP R-1	
Residential	2,364 SF
Exercise	259 SF
GROUP U	
ACCESSORY	103 SF
GRAND TOTAL	9,026 SF

*aggregate area of acc. spaces is limited to 10% of the floor area

CODE SYMBOLS LEGEND

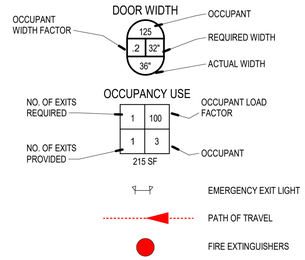

GENERAL NOTES

A. COORDINATE FINAL LOCATION OF FIRE EXTINGUISHERS WITH FIRE MARSHAL

B. PENETRATION FIRE STOPPING TO BE USED AT ALL PENETRATIONS IN FIRE RATED WALLS.

C. ALL WOOD BUILDING MATERIALS MUST BE FIRE RETARDANT TREATED WOOD.

D. FIRE ALARM SYSTEM PLANS SHALL BE SUBMITTED TO THE FIRE MARSHALS OFFICE FOR APPROVAL PRIOR TO INSTALLATION OR ALTERATION.

E. FIRE SPRINKLER PLANS SHALL BE SUBMITTED TO THE FIRE MARSHALS OFFICE FOR APPROVAL PRIOR TO INSTALLATION OR ALTERATION.

F. THE FIRE SPRINKLER SYSTEM WILL BE SUPERVISED WHEN REQUIRED BY THE INTERNATIONAL FIRE CODE.

G. DUCT SMOKE DETECTION TO COMPLY WITH INTERNATIONAL FIRE CODE.

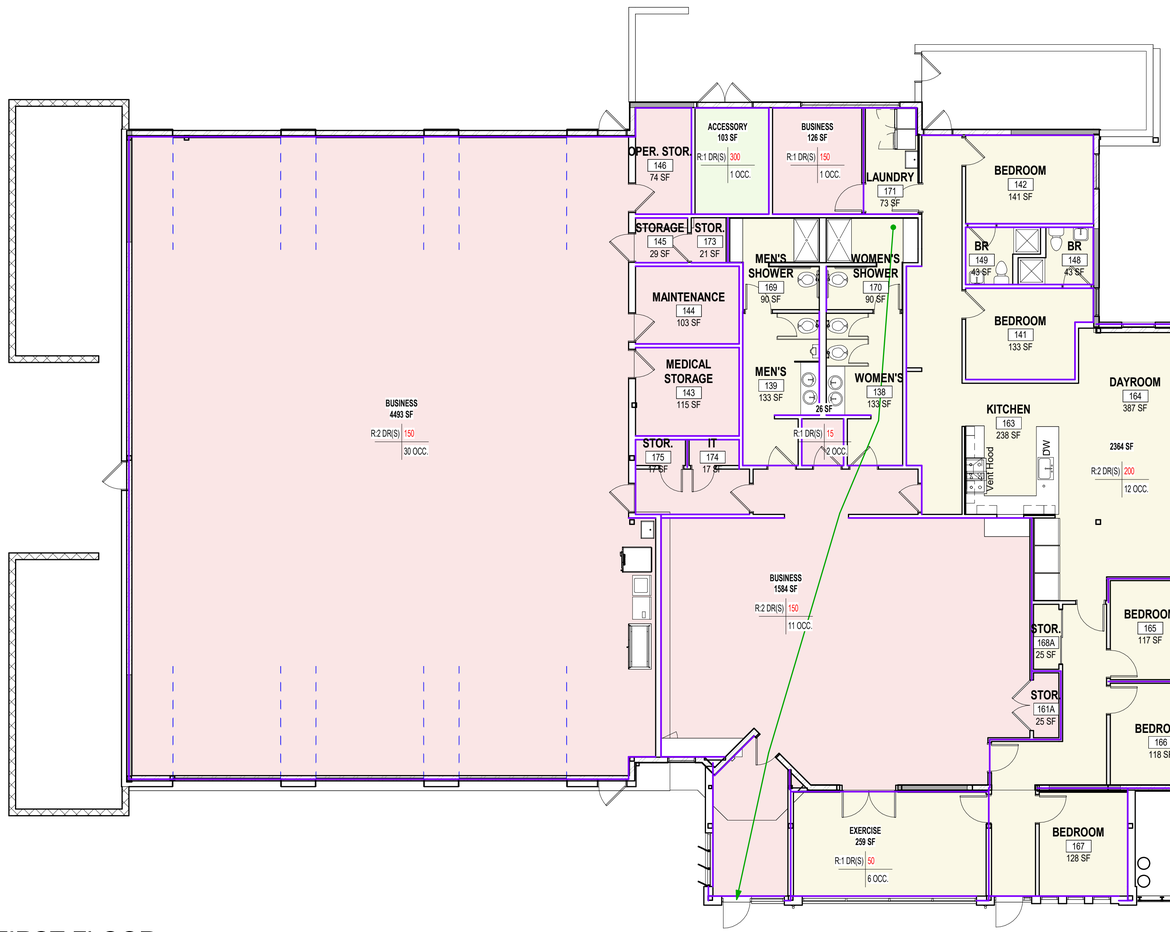

A1 FIRST FLOOR
1/8" = 1'-0"

Plan North True North

CODE ANALYSIS

2021 NEW MEXICO COMMERCIAL BUILDING CODE
2021 NEW MEXICO PLUMBING CODE
2021 NEW MEXICO MECHANICAL CODE
2012 NEW MEXICO ELECTRICAL SAFETY CODE
2018 NEW MEXICO ENERGY CONSERVATION CODE
2017 ICC / ANSI A117.1-2017

CONSTRUCTION TYPES — **SECTION 602**

CONSTRUCTION TYPE II-B, FULLY SPRINKLERED

OCCUPANCY — **IBC CHAPTER 3, CHAPTER 303.1.2**

BUSINESS - GROUP B — SECTION 304

ALLOWABLE HEIGHT — **SECTION 504, TABLE 504.3**

MAXIMUM HEIGHT ALLOWED: 75 ft.
ACTUAL BUILDING HEIGHT OF ADDITION: 14 ft.

ALLOWABLE AREAS — **SECTION 506, TABLE 506.2**

ALLOWABLE AREA: 92,000 sf.
ACTUAL AREA: 9,265 sf.

FIRE-RESISTANCE RATING REQUIREMENTS FOR BUILDING ELEMENTS — **TABLE 601**

BUILDING ELEMENT	TYPE II-B
PRIMARY STRUCTURAL FRAME (SEE SECTION 202)	0
BEARING WALLS	
EXTERIOR	0
INTERIOR	0
NONBEARING WALLS AND PARTIONS - EXTERIOR	
NONBEARING WALLS AND PARTIONS - EXTERIOR	0
FLOOR CONSTRUCTION AND ASSOCIATED SECONDARY STRUCTURAL MEMBERS (SEE SECTION 202)	0
ROOF CONSTRUCTION AND ASSOCIATED SECONDARY STRUCTURAL MEMBERS (SEE SECTION 202)	0

EXTERIOR WALL FIRE RESISTANCE RATING
NOT REQUIRED IF FIRE SEPARATION DISTANCE > 10' — TABLE 602

MAXIMUM EXTERIOR WALL OPENING — **SECTION 705.8**

45%

OCCUPANT LOAD FACTORS FOR EGRESS — **SECTION 1004, TABLE 1004.1.2.**

B - BUSINESS OCCUPANCY
FLOOR AREA PER OCCUPANT — 150 SF. GROSS

ACCESSORY OCCUPANCY
FLOOR AREA PER OCCUPANT — 300 SF. GROSS

EXERCISE ROOM OCCUPANCY
FLOOR AREA PER OCCUPANT — 50 SF. GROSS

RESIDENTIAL OCCUPANCY
FLOOR AREA PER OCCUPANT — 200 SF. GROSS

OCCUPANCY SIGNAGE - POSTING OF OCCUPANT LOAD — **SECTION 1004.9**

EVERY ROOM OR SPACE THAT IS AN ASSEMBLY OCCUPANCY SHALL HAVE THE OCCUPANT LOAD OF THE ROOM OR SPACE POSTED IN A CONSPICUOUS PLACE, NEAR THE MAIN EXIT OR ACCESS DOORWAY FROM THE ROOM OR SPACE, FOR THE INTENDED CONFIGURATIONS. POSTED SIGNS SHALL BE OF AN APPROVED LEGIABLE PERMANENT DESIGN AND SHALL BE MAINTAINED BY THE OWNER OR THE OWNER'S AUTHORIZED AGENT.

NUMBER OF EXITS REQUIRED — **SECTION 1006, TABLE 1006.2.1**

ASSEMBLY - OCCUPANT LOAD GREATER THAN 49 REQUIRES 2 EXITS

CLASSROOM OCCUPANTS: 58 - EXITS PROVIDED = 2

TRAVEL DISTANCE — **SECTION 1017, TABLE 1006.2.1**

BUSINESS - MAX TRAVEL DISTANCE WITH SPRINKLERED SYSTEM IS 100 ft.

PROVIDED 45 FT. MAXIMUM TRAVEL DISTANCE, THEREFORE OK

PLUMBING FIXTURES

OCCUPANT LOAD FOR PLUMBING — **SECTION 2902, TABLE 2902.1**

BUSINESS OCCUPANCY: 120 TOTAL OCCUPANTS - (60 FEMALE, 60 MALE)

WATER CLOSETS:
MALE: (1 PER 25) 3 WC REQUIRED, 3 WC EXISTING, THEREFORE OK
FEMALE: (1 PER 25) 3 WC REQUIRED, 3 WC EXISTING , THEREFORE OK

LAVATORIES:MALE AND FEMALE: (1 PER 40) 3 LAV REQUIRED, 4 LAV EXISTING, THEREFORE OK

DRINKING FOUNTAINS: (1 PER 100) 1 REQUIRED, ?
SERVICE SINK: 1 EXISTING, THEREFORE OK

STUDIO SW ARCHITECTS
2101 Mountain Road NW Suite B | Albuquerque NM 87104
505-843-9639 | www.studioswarch.com

© 2025 Studio Southwest Architects, Inc. Duplication or reproduction by any means without the express written consent of Studio Southwest Architects, Inc. is a violation of federal and international law. The information contained in this document is the intellectual property of Studio Southwest Architects, Inc. and all rights thereto are reserved.

CONSULTANTS

Architect Engineer

STATE OF NEW MEXICO
LAURA B. ANDERSON
No. 5528
REGISTERED ARCHITECT

SFC HONDO FIRE STATION

645 OLD LAS VEGAS HIGHWAY
SANTA FE, NM 87505

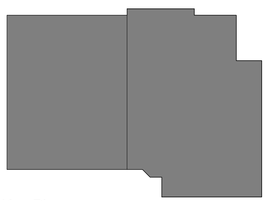

Key Plan NTS

No	Date	Description
Revision Schedule		

ISSUE:	100% CONSTRUCTION DOCUMENTS
PROJECT NUMBER:	2502
FILE:	SSWA_Inc_2025_Template.rte
DRAWN BY:	MA
CHECKED BY:	LA
DATE:	AUGUST 15, 2025

SHEET TITLE

CODE ANALYSIS, EGRESS PLAN

G-002

2/3/2025 2:32:31 PM
C:\Users\mangeles\Documents\2502_SFC Hondo Fire Station_mangeles547KS.rvt

CIVIL CONSTRUCTION NOTES:

A. GENERAL

1. THE CONTRACTOR SHALL BE RESPONSIBLE FOR VERIFYING THE EXISTENCE AND LOCATION OF ALL UNDERGROUND OR CONCEALED UTILITIES IN ADVANCE OF ANY CONSTRUCTION.
2. THE CONTRACTOR SHALL REPAIR ANY AND ALL INFRASTRUCTURE DAMAGED DURING THE COURSE OF CONSTRUCTION IN ACCORDANCE WITH NEW MEXICO STANDARD SPECIFICATIONS FOR PUBLIC WORKS CONSTRUCTION.
3. THE JOB SITE, AT THE COMPLETION OF CONSTRUCTION, SHALL BE CLEANED OF ANY DEBRIS OR SPOILS RESULTING FROM THE CONSTRUCTION.
4. IT IS THE CONTRACTOR'S RESPONSIBILITY TO INSPECT THE JOB SITE TO FAMILIARIZE HERSELF/HIMSELF WITH ALL THE EXISTING CONDITIONS THAT COULD AFFECT THE INSTALLATION OF ANY WORK SET FORTH IN THESE PLANS.
5. ALL WORK ON THIS PROJECT SHALL BE PERFORMED IN ACCORDANCE WITH APPLICABLE FEDERAL, STATE AND LOCAL LAWS, RULES AND REGULATIONS CONCERNING CONSTRUCTION SAFETY AND HEALTH.
6. THE CONTRACTOR SHALL NOT INSTALL ITEMS AS SHOWN ON THE PLANS WHEN IT IS OBVIOUS THAT FIELD CONDITIONS ARE DIFFERENT THAN SHOWN IN THE DESIGN. SUCH CONDITIONS SHOULD BE BROUGHT TO THE ATTENTION OF THE CONSTRUCTION MANAGER. IN THE EVENT THE CONTRACTOR DOES NOT NOTIFY THE CONSTRUCTION MANAGER, THE CONTRACTOR ASSUMES FULL RESPONSIBILITY AND EXPENSE FOR ANY REVISIONS NECESSARY.
7. EXISTING SITE IMPROVEMENTS WHICH ARE DAMAGED OR DISPLACED BY THE CONTRACTOR SHALL BE REMOVED AND REPLACED BY THE CONTRACTOR AT THE CONTRACTOR'S EXPENSE.
8. EXISTING FENCING THAT IS NOT DESIGNATED FOR REMOVAL SHALL NOT BE DISTURBED. ANY FENCING THAT IS DISTURBED OR ALTERED BY THE CONTRACTOR SHALL BE RESTORED TO ITS ORIGINAL CONDITION AT THE CONTRACTOR'S EXPENSE. IF THE CONTRACTOR WOULD LIKE TO REMOVE FENCING TO FACILITATE CONSTRUCTION OPERATIONS, THIS MAY BE DONE WITH THE OWNER'S PERMISSION, AND THE CONTRACTOR SHALL RESTORE THE FENCE TO ITS ORIGINAL CONDITION PRIOR TO THE CLOSE OF THE PROJECT. CONTRACTOR IS RESPONSIBLE FOR SECURITY OF THE SITE UNTIL THE FENCE IS REPLACED.
9. ALL EXISTING MAINLINE UTILITIES ARE TO REMAIN IN PLACE AND ARE TO BE PROTECTED DURING DEMOLITION AND CONSTRUCTION.
10. NEITHER THE OWNER, CONSTRUCTION MANAGER, NOR THE ARCHITECT OR ENGINEER OF RECORD WILL ENFORCE ANY SAFETY MEASURE OR REGULATION. THE CONTRACTOR SHALL DESIGN, CONSTRUCT AND MAINTAIN ALL SAFETY DEVICES, INCLUDING TRAFFIC CONTROL, SHORING, AND SHALL BE SOLELY RESPONSIBLE FOR CONFORMING TO ALL LOCAL, STATE AND FEDERAL SAFETY AND HEALTH STANDARDS, LAWS AND REGULATIONS. IF ANYONE IN AS AUTHORITY OR SUPERVISORY POSITION SEES ANYTHING WRONG OR A SERIOUS LIFE THREATENING SITUATION CAUSED BY THE CONTRACTOR, THAT PERSON SHALL HAVE THE RIGHT TO STOP THE JOB AND DEMAND THAT THE CONTRACTOR IMMEDIATELY CORRECTS THE WRONG-DOING.
11. CONTRACTOR WILL BE RESPONSIBLE FOR ANY MONUMENTATION AND/OR BENCHMARKS WHICH WILL BE DISTURBED OR DESTROYED BY CONSTRUCTION. SUCH POINTS SHALL BE REFERENCED AND REPLACED WITH APPROPRIATE MONUMENTATION BY A LICENSED LAND SURVEYOR.
12. ANY WORK DONE WITHOUT INSPECTION OR TESTING IS SUBJECT TO REMOVAL OR CORRECTION. THE CONTRACTOR SHALL PROVIDE A SIGNED DOCUMENT SHOWING PROOF OF INSPECTION AND/OR TESTING.
13. THE ENGINEER OF RECORD SHALL NOT BE RESPONSIBLE FOR THE CONTRACTOR'S FAILURE TO CARRY OUT THE CONSTRUCTION WORK IN ACCORDANCE WITH THE CONTRACT DOCUMENTS, NOR SHALL HE/SHE BE REQUIRED TO SUPERVISE THE CONDUCT OF THE WORK OR THE CONSTRUCTION PROCEDURES AND SAFETY PROCEDURES FOLLOWED BY THE CONTRACTOR OR THE SUBCONTRACTOR OR THEIR RESPECTIVE EMPLOYEES OR BY ANY OTHER PERSON AT THE JOB SITE OTHER THAN THAT OF THE ENGINEER'S EMPLOYEES.
14. CONTRACTOR AGREES THAT HE/SHE SHALL ASSUME SOLE AND COMPLETE RESPONSIBILITY FOR THE JOB SITE CONDITIONS DURING THE COURSE OF CONSTRUCTION OF THIS PROJECT, INCLUDING SAFETY OF ALL PERSONS AND PROPERTY; THAT THIS REQUIREMENT SHALL APPLY 24 HOURS A DAY AND NOT BE LIMITED TO NORMAL WORKING HOURS; AND THAT THE CONTRACTOR SHALL DEFEND, INDEMNIFY AND HOLD THE OWNER, CONSTRUCTION MANAGER AND ENGINEER HARMLESS OF ANY AND ALL LIABILITY, REAL OR ALLEGED, IN CONNECTION WITH THE PERFORMANCE OF WORK ON HIS/HER PROJECT, EXCEPTING LIABILITY ARISING FROM THE SOLE NEGLIGENCE OF THE OWNER OR THE ENGINEER.
15. ALL EXISTING TOPO, EXISTING BOUNDARY, EXISTING EASEMENT INFORMATION, & EXISTING UTILITIES SHOWN ON THE PLANS DRAWINGS WERE OBTAINED FROM THE SURVEY AS OBTAINED FROM PRECISION SURVEYS INC, LARRY MEDRANO, 505-856-5700.
16. THE CONTRACTOR SHALL NOTIFY ALL APPLICABLE UTILITY COMPANIES AT THE NEW MEXICO ONE CALL TWO (2) WORKING DAYS PRIOR TO ANY DIGGING OR EXCAVATION.

B. DEMOLITION

1. PROTECT THE EXISTING WATERLINE MAINS ON THE SITE AS SHOWN ON THE PLANS.
2. REMOVE AND DISPOSE OF ANY ADJACENT SIDEWALKS, STEPS, ASPHALT PAVEMENT, DRIVEPADS, SHEDS, FENCES, DEBRIS AND OTHER NON-CLASSIFIED MATERIAL, ETC. IF ANY ITEM APPEARS TO BE QUESTIONABLE, THE ARCHITECT/ENGINEER SHALL BE NOTIFIED FOR CONCURRENCE.

C. PAVING

1. WHEN ABUTTING NEW PAVEMENT TO EXISTING, SAWCUT THE EXISTING PAVEMENT TO A NEAT, STRAIGHT LINE AS REQUIRED TO REMOVE ANY BROKEN OR CRACKED PAVEMENT AND MATCH NEW PAVING TO EXISTING.
2. ALL UTILITIES AND UTILITY SERVICE LINES SHALL BE INSTALLED AND APPROVED PRIOR TO PAVING.
3. ALL EXISTING WATER VALVE BOXES, ELECTRICAL, TELEPHONE, TV AND SEWER MANHOLES IN THE CONSTRUCTION AREA SHALL BE ADJUSTED TO FINISHED GRADE.
4. ALL STATIONING IS TO CONSTRUCTION BASELINES UNLESS OTHERWISE NOTED.
5. ALL SLOPES AND GRADES ARE IN FEET/FOOT UNLESS OTHERWISE NOTED.
6. ALL SURFACES ALONG ACCESSIBLE ROUTES AND FOR HANDICAP RAMPS SHALL BE STABLE, FIRM, SLIDE-RESISTANT, AND SHALL COMPLY WITH UNIFORM FEDERAL ACCESSIBILITY STANDARDS, PARAGRAPH 4.5.
7. LONGITUDINAL SLOPES ALONG ACCESSIBLE ROUTE SIDEWALKS, EXCEPT AT HANDICAP RAMPS, SHALL NOT BE STEEPER THAN 1:20. CROSS SLOPES ALONG ACCESSIBLE ROUTE SIDEWALKS EXCEPT AT HANDICAP RAMPS, SHALL NOT BE STEEPER THAN 1:48. SLOPES IN ACCESSIBLE PARKING SPACES, ACCESS AISLES, AND PASSENGER LOADING ZONES SHALL NOT BE STEEPER THAN 1:48 IN ALL DIRECTIONS.
8. THE CONTRACTOR SHALL PROVIDE ALL REQUIRED TRAFFIC CONTROL PLANS. ALL SIGNS, BARRICADES, CHANNELIZATION DEVICES, SIGN FRAMES AND ERECTION OF SUCH DEVICES SHALL CONFORM TO THE REQUIREMENTS OF SANTA FE COUNTY, TRAFFIC CONTROL DEPARTMENTS.

D. UTILITIES

1. IF ANY UTILITY LINES, PIPELINES, OR UNDERGROUND UTILITY LINES ARE SHOWN ON THESE DRAWINGS, THEY ARE SHOWN IN AN APPROXIMATE MANNER ONLY, AND SUCH LINES MAY EXIST WHERE NONE ARE SHOWN. IF ANY SUCH EXISTING LINES ARE SHOWN, THE LOCATION IS BASED UPON INFORMATION PROVIDED TO THE ENGINEER BY OTHERS, AND THE INFORMATION MAY BE INCOMPLETE, OR MAY BE OBSOLETE BY THE TIME CONSTRUCTION COMMENCES. THE CONTRACTOR SHALL VERIFY THE LOCATION OF ANY UTILITY LINE, PIPELINE OR UNDERGROUND UTILITY LINE IN OR NEAR THE AREA OF THE WORK.
2. THE EXISTING UTILITIES DEPICTED ON THESE PLANS WERE DERIVED FROM INFORMATION PROVIDED TO THE ENGINEER BY OTHERS. PRIOR TO CONSTRUCTION, THE CONTRACTOR SHALL EXCAVATE AND VERIFY THE HORIZONTAL AND VERTICAL LOCATIONS OF PERTINENT UTILITIES. SHOULD A CONFLICT EXIST, THE CONTRACTOR SHALL NOTIFY THE ENGINEER SO THAT THE CONFLICT CAN BE RESOLVED WITH A MINIMUM AMOUNT OF DELAY. CONTRACTOR IS TO EXERCISE DUE CARE TO AVOID DISTURBING ANY EXISTING UNDERGROUND UTILITIES. IT SHALL BE THE CONTRACTOR'S RESPONSIBILITY TO COORDINATE ANY POTENTIAL DISRUPTIONS IN UTILITY SERVICE WITH THE UTILITY COMPANIES AFFECTED AT LEAST 48 HOURS PRIOR TO THE DISRUPTION.
3. CONTRACTOR SHALL EXPOSE AND VERIFY INVERT ELEVATIONS OF RELEVANT SANITARY SEWER LINES BEFORE SETTING ANY NEW INVERTS. SHOULD INVERTS DIFFER MORE THAN 0.20' FROM THOSE SHOWN ON THE PLANS, THE ENGINEER SHALL BE NOTIFIED TO DETERMINE ANY RESULTING CHANGES IN DESIGN.
4. REFERENCE MADE TO APWA REFERS TO AMERICAN PUBLIC WORKS ASSOCIATION.
5. ALL NEW AND EXISTING FRAMES, COVERS, VALVE BOXES, ETC. SHALL BE ADJUSTED TO NEW FINISHED GRADE PRIOR TO PLACING OF ASPHALT CONCRETE SURFACE COURSE BY THE CONTRACTOR.
6. THE CONTRACTOR SHALL NOTIFY ALL APPLICABLE UTILITY COMPANIES AT THE NEW MEXICO ONE CALL TWO (2) WORKING DAYS PRIOR TO ANY DIGGING OR EXCAVATION.

CIVIL MASTER LEGEND:

	EXISTING:	DEMOLITION:	NEW:
PROPERTY LINE			
BUILDING			
EDGE OF PAVEMENT			
CURB & GUTTER			
PAVEMENT STRIPING			
FENCE			
CMU OR BLOCK WALL			
UTILITY EASEMENT			
UNDERGROUND ELECTRIC LINE	UGE	UGE	UGE
OVERHEAD ELECTRIC LINE	OHE	OHE	OHE
WATER LINE	8W	8W	8W
SANITARY SEWER LINE	SS	SS	SS
STORM DRAIN LINE	SD	SD	SD
INDEX CONTOURS	25		25
INTERMEDIATE CONTOURS	24		24
POWER POLE			
LIGHT POLE			
ELECTRICAL TRANSFORMER	T		T
WATER VALVE			
FIRE HYDRANT			
WATER METER			
POST INDICATOR VALVE			
SIAMESE CONNECTION			
POST HYDRANT	P		P
BACKFLOW PREVENTOR	B.F.P.		B.F.P.
SANITARY SEWER MANHOLE			
SANITARY SEWER SINGLE CLEANOUT			
SANITARY SEWER DOUBLE CLEANOUT			
STORM DRAIN MANHOLE			
SINGLE STORM DRAIN INLET			
GRADING SPOT ELEVATIONS	G=25.00		25.00 TC 24.50 FL

ABBREVIATIONS:

BOTTOM OF FOOTING	BOF	TOP OF CURB	TC
BOTTOM OF WALL	BOW	TOP OF FOOTING	TOF
EXISTING GROUND	EG	TOP OF CONCRETE	TOC
FINISH GRADE	FG	TOP OF RETAINING WALL	TOW
FINISH FLOOR	FF	TOP OF SIDEWALK	TSW
FLOWLINE	FL	TOP OF WALL	TW
INVERT	INV	RIM	RIM
TOP OF ASPHALT	TA	NOT IN CONTRACT	NIC

STUDIO SW ARCHITECTS
2101 Mountain Road NW Suite B | Albuquerque NM 87104
505-843-9639 | www.studioswarch.com

© 2025 Studio Southwest Architects, Inc. Duplication or reproduction by any means without the express written consent of Studio Southwest Architects, Inc. is a violation of federal and international law. The information contained in this document is the intellectual property of Studio Southwest Architects, Inc. and all rights thereto are reserved.

CONSULTANTS

Architect Engineer

DAVID A. AUBE STATE OF NEW MEXICO REGISTERED PROFESSIONAL ENGINEER 14221

Digitally signed by David A Aube
Date: 2025.08.15 08:00:29-06'00'

David A AuBe

SFC HONDO FIRE STATION

645 OLD LAS VEGAS HIGHWAY
SANTA FE, NM 87505

No	Date	Description
Revision Schedule		

ISSUE:	100% CONSTRUCTION
PROJECT NUMBER:	2502
FILE:	
DRAWN BY:	
CHECKED BY:	
DATE:	AUGUST 15, 2025

SHEET TITLE

CIVIL GENERAL NOTES AND LEGEND

CG-01

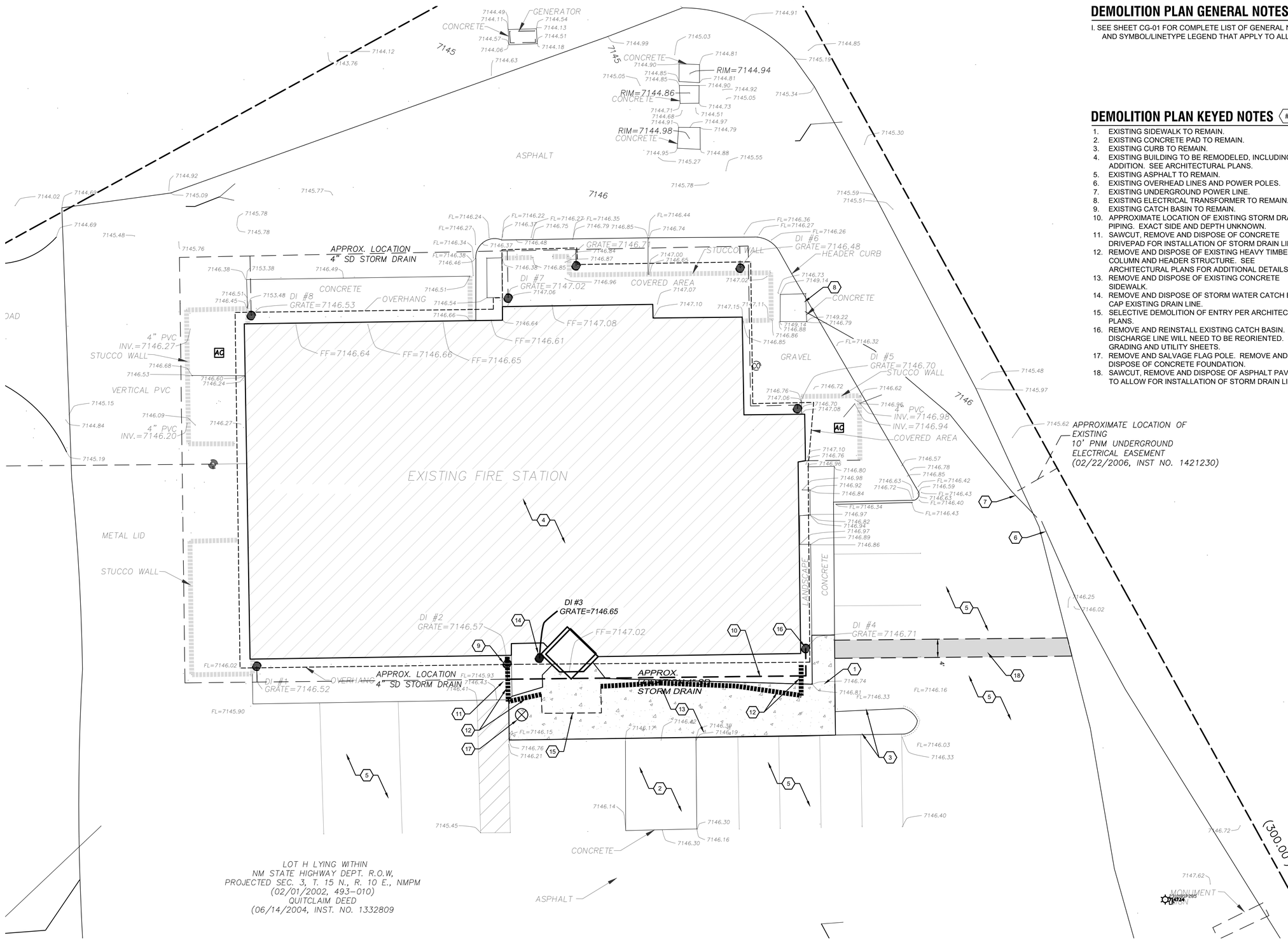

1 SITE DEMOLITION PLAN
SCALE: 1" = 10'-0"

0' 5' 10' 20' 40'

True North

DEMOLITION PLAN GENERAL NOTES

I. SEE SHEET CG-01 FOR COMPLETE LIST OF GENERAL NOTES AND SYMBOL/LINETYPE LEGEND THAT APPLY TO ALL SHEETS.

DEMOLITION PLAN KEYED NOTES

1. EXISTING SIDEWALK TO REMAIN.
2. EXISTING CONCRETE PAD TO REMAIN.
3. EXISTING CURB TO REMAIN.
4. EXISTING BUILDING TO BE REMODELED, INCLUDING AN ADDITION. SEE ARCHITECTURAL PLANS.
5. EXISTING ASPHALT TO REMAIN.
6. EXISTING OVERHEAD LINES AND POWER POLES.
7. EXISTING UNDERGROUND POWER LINE.
8. EXISTING ELECTRICAL TRANSFORMER TO REMAIN.
9. EXISTING CATCH BASIN TO REMAIN.
10. APPROXIMATE LOCATION OF EXISTING STORM DRAIN PIPING. EXACT SIDE AND DEPTH UNKNOWN.
11. SAWCUT, REMOVE AND DISPOSE OF CONCRETE DRIVEPAD FOR INSTALLATION OF STORM DRAIN LINE.
12. REMOVE AND DISPOSE OF EXISTING HEAVY TIMBER COLUMN AND HEADER STRUCTURE. SEE ARCHITECTURAL PLANS FOR ADDITIONAL DETAILS.
13. REMOVE AND DISPOSE OF EXISTING CONCRETE SIDEWALK.
14. REMOVE AND DISPOSE OF STORM WATER CATCH BASIN. CAP EXISTING DRAIN LINE.
15. SELECTIVE DEMOLITION OF ENTRY PER ARCHITECTURAL PLANS.
16. REMOVE AND REINSTALL EXISTING CATCH BASIN. DISCHARGE LINE WILL NEED TO BE REORIENTED. SEE GRADING AND UTILITY SHEETS.
17. REMOVE AND SALVAGE FLAG POLE. REMOVE AND DISPOSE OF CONCRETE FOUNDATION.
18. SAWCUT, REMOVE AND DISPOSE OF ASPHALT PAVEMENT TO ALLOW FOR INSTALLATION OF STORM DRAIN LINE.

STUDIO SW ARCHITECTS
2101 Mountain Road NW Suite B | Albuquerque NM 87104
505-843-9639 | www.studioswarch.com

© 2025 Studio Southwest Architects, Inc. Duplication or reproduction by any means without the express written consent of Studio Southwest Architects, Inc. is a violation of federal and international law. The information contained in this document is the intellectual property of Studio Southwest Architects, Inc. and all rights thereto are reserved.

CONSULTANTS

Architect Engineer

David A Aube

SFC HONDO FIRE STATION

645 OLD LAS VEGAS HIGHWAY
SANTA FE, NM 87505

No	Date	Description

Revision Schedule

ISSUE:	100% CONSTRUCTION
PROJECT NUMBER:	2502
FILE:	
DRAWN BY:	DAA
CHECKED BY:	DAA
DATE:	AUGUST 15, 2025

SHEET TITLE

SITE DEMOLITION PLAN

C-001

2/3/2025 2:32:31 PM

C:\Users\mangeles\Documents\2502_SFC Hondo Fire Station_mangeles547K3.rvt

2/3/2025 2:32:31 PM
C:\Users\mrangel\Documents\2502_SFC Hondo Fire Station_mrangelesDK7K3.rvt

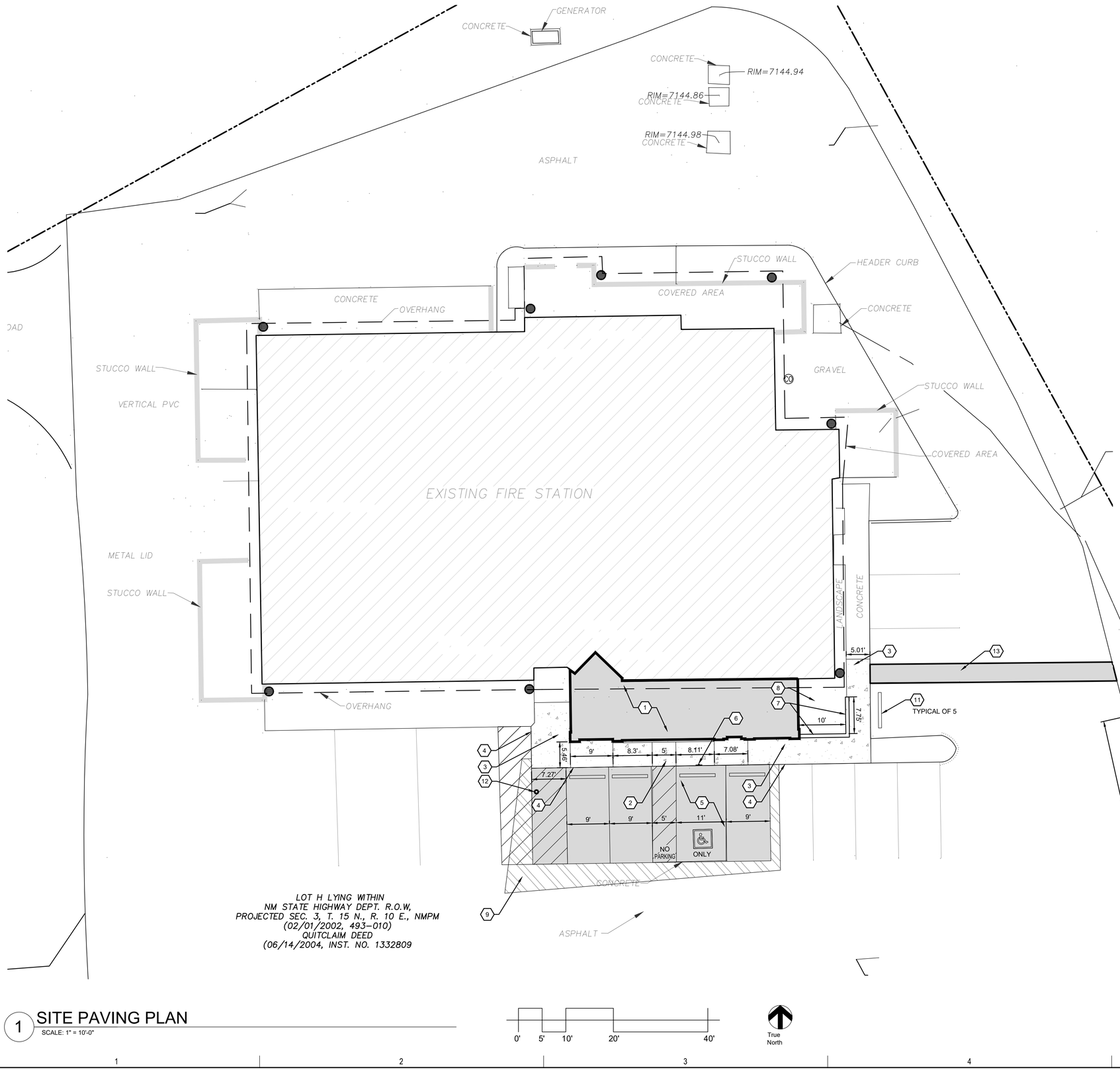

LOT H LYING WITHIN
NM STATE HIGHWAY DEPT. R.O.W,
PROJECTED SEC. 3, T. 15 N., R. 10 E., NMPM
(02/01/2002, 493–010)
QUITCLAIM DEED
(06/14/2004, INST. NO. 1332809

1 SITE PAVING PLAN
SCALE: 1" = 10'-0"

0' 5' 10' 20' 40'

True North

PAVING PLAN GENERAL NOTES

A. CONTRACTOR SHALL PROTECT EXISTING IMPROVEMENTS TO REMAIN INCLUDING, BUT NOT LIMITED TO, BUILDINGS, PAVING, CURBS, SITE WALLS, FOUNDATIONS AND UTILITIES. EXISTING FOUNDATIONS SHALL MAINTAIN THEIR ORIGINAL STRUCTURAL INTEGRITY AS THEY WERE DESIGNED.
B. GENERAL CONTRACTOR SHALL PATCH, REPAIR AND/OR REPLACE ITEMS TO REMAIN THAT HAVE BEEN DAMAGED DURING CONSTRUCTION, TO THE OWNER'S SATISFACTION AND AT NO COST TO THE OWNER.
C. CONTRACTOR SHALL ENSURE THAT UTILITY SERVICE TO EXISTING BUILDINGS TO REMAIN SHALL BE OPERATIONAL DURING CONSTRUCTION.
D. CONTRACTOR SHALL BE RESPONSIBLE FOR PROVIDING SAFETY MEASURES TO PROTECT PEDESTRIANS AND VEHICLES DURING CONSTRUCTION.
E. CONTRACTOR IS TO VERIFY ALL EXISTING UTILITY LOCATIONS BEFORE EXCAVATION.
F. ALL SITE PLAN DIMENSIONS ARE IN DECIMAL UNITS.

PAVING PLAN KEYED NOTES

1. BUILDING ADDITION, SEE ARCHITECTURAL PLANS.
2. CONCRETE CURB ACCESS RAMP PER DETAIL A1/C502.
3. CONCRETE SIDEWALK PER DETAIL B4/C501.
4. TURNDOWN EDGE ON SIDEWALK PER DETAIL E4/C501.
5. OVERTOP EXISTING ASPHALT OR CONCRETE PAVING AND ADA RESERVED PARKING STALL, PER DETAIL A3/C502.
6. ADA VAN ACCESSIBLE RESERVED SIGN PER DETAIL D3/C502 AND E6/C-502.
7. MASONRY SCREEN WALL.
8. MECHANICAL EQUIPMENT YARD.
9. TAPER ASPHALT OVERTOP FROM 3" RAISE AT PARKING STALLS DOWN TO BEING FLUSH WITH EXISTING ASPHALT PARKING AREA.
10. PONDING AREA SEE SHEET C-201.
11. CONCRETE PARKING BLOCK PER DETAIL F2/C-501. LOCATE AT 2'-0" FROM EDGE OF SIDEWALK TO CENTERLINE OF PARKING BLOCK.
12. RELOCATED FLAG POLE ON NEW FOUNDATION PER MANUFACTURES RECOMMENDATIONS.
13. PATCH ASPHALT WHERE STORM DRAIN LINEN HAS BEEN INSTALLED, PER DETAIL D1/C-501.
14. RIPRAP EROSION PROTECTION PER DETAIL D3/C-501.

LEGEND

- PROPERTY LINE
- EASEMENT
- ASPHALT PAVEMENT PER DETAIL D1/C501
- CONCRETE SIDEWALK PER DETAIL B4/C501
- CONCRETE PAVEMENT PER DETAIL D4/C501
- SLOPED ASPHALT SLOPE AT 1" PER FOOT MAXIMUM

STUDIO SW ARCHITECTS
2101 Mountain Road NW Suite B | Albuquerque NM 87104
505-843-9639 | www.studioswarch.com

© 2025 Studio Southwest Architects, Inc. Duplication or reproduction by any means without the express written consent of Studio Southwest Architects, Inc. is a violation of federal and international law. The information contained in this document is the intellectual property of Studio Southwest Architects, Inc. and all rights thereto are reserved.

CONSULTANTS

Architect

Engineer

DAVID A. AUBE STATE OF NEW MEXICO 14221 REGISTERED PROFESSIONAL ENGINEER
David A Aube
Digitally signed by David A Aube
DN: C=US, E=daa@studioswarch.com, O=Studio Southwest Architects, OU=Civil Department, CN=David A Aube
Date: 2025.08.15 09:09:59-06'00'

SFC HONDO FIRE STATION

645 OLD LAS VEGAS HIGHWAY
SANTA FE, NM 87505

No	Date	Description
Revision Schedule		

ISSUE:	100% CONSTRUCTION
PROJECT NUMBER:	2502
FILE:	
DRAWN BY:	DAA
CHECKED BY:	DAA
DATE:	AUGUST 15, 2025

SHEET TITLE

SITE PAVING PLAN

C-101

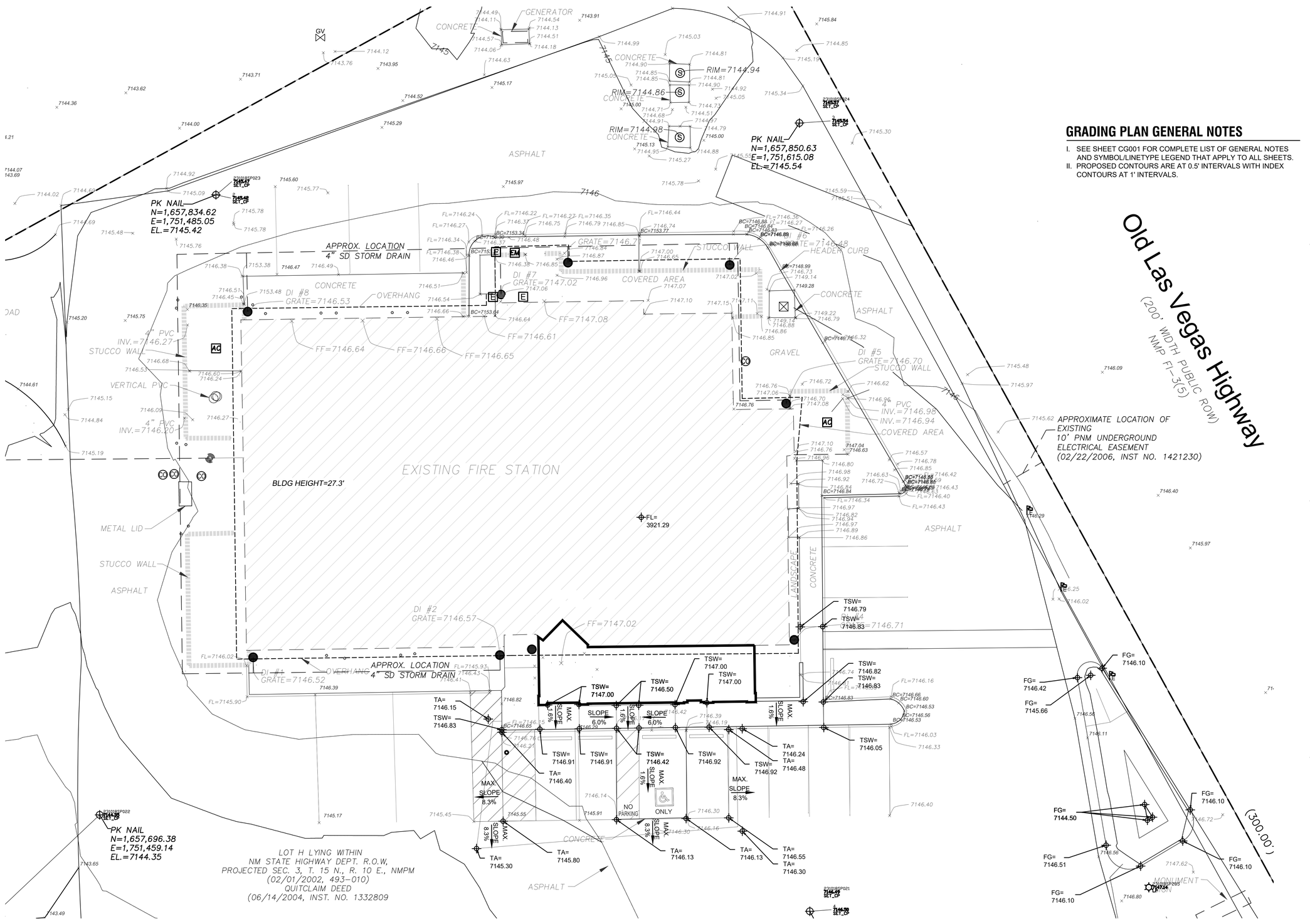

GRADING PLAN GENERAL NOTES

I. SEE SHEET CG001 FOR COMPLETE LIST OF GENERAL NOTES AND SYMBOL/LINETYPE LEGEND THAT APPLY TO ALL SHEETS.
II. PROPOSED CONTOURS ARE AT 0.5' INTERVALS WITH INDEX CONTOURS AT 1' INTERVALS.

1 SITE GRADING PLAN
SCALE: 1" = 10'-0"

0' 5' 10' 20' 40'

True North

STUDIO SW ARCHITECTS
2101 Mountain Road NW Suite B | Albuquerque NM 87104
505-843-9639 | www.studioswarch.com

© 2025 Studio Southwest Architects, Inc. Duplication or reproduction by any means without the express written consent of Studio Southwest Architects, Inc. is a violation of federal and international law. The information contained in this document is the intellectual property of Studio Southwest Architects, Inc. and all rights thereto are reserved.

CONSULTANTS

Architect | Engineer

David A. Aube

SFC HONDO FIRE STATION

645 OLD LAS VEGAS HIGHWAY
SANTA FE, NM 87505

No	Date	Description

Revision Schedule

ISSUE:	100% CONSTRUCTION
PROJECT NUMBER:	2502
FILE:	
DRAWN BY:	DAA
CHECKED BY:	DAA
DATE:	AUGUST 15, 2025

SHEET TITLE

SITE GRADING PLAN

C-201

2/3/2025 2:32:31 PM

C:\Users\mangeles\Documents\2502_SFC Hondo Fire Station_mangeles547K3.rvt

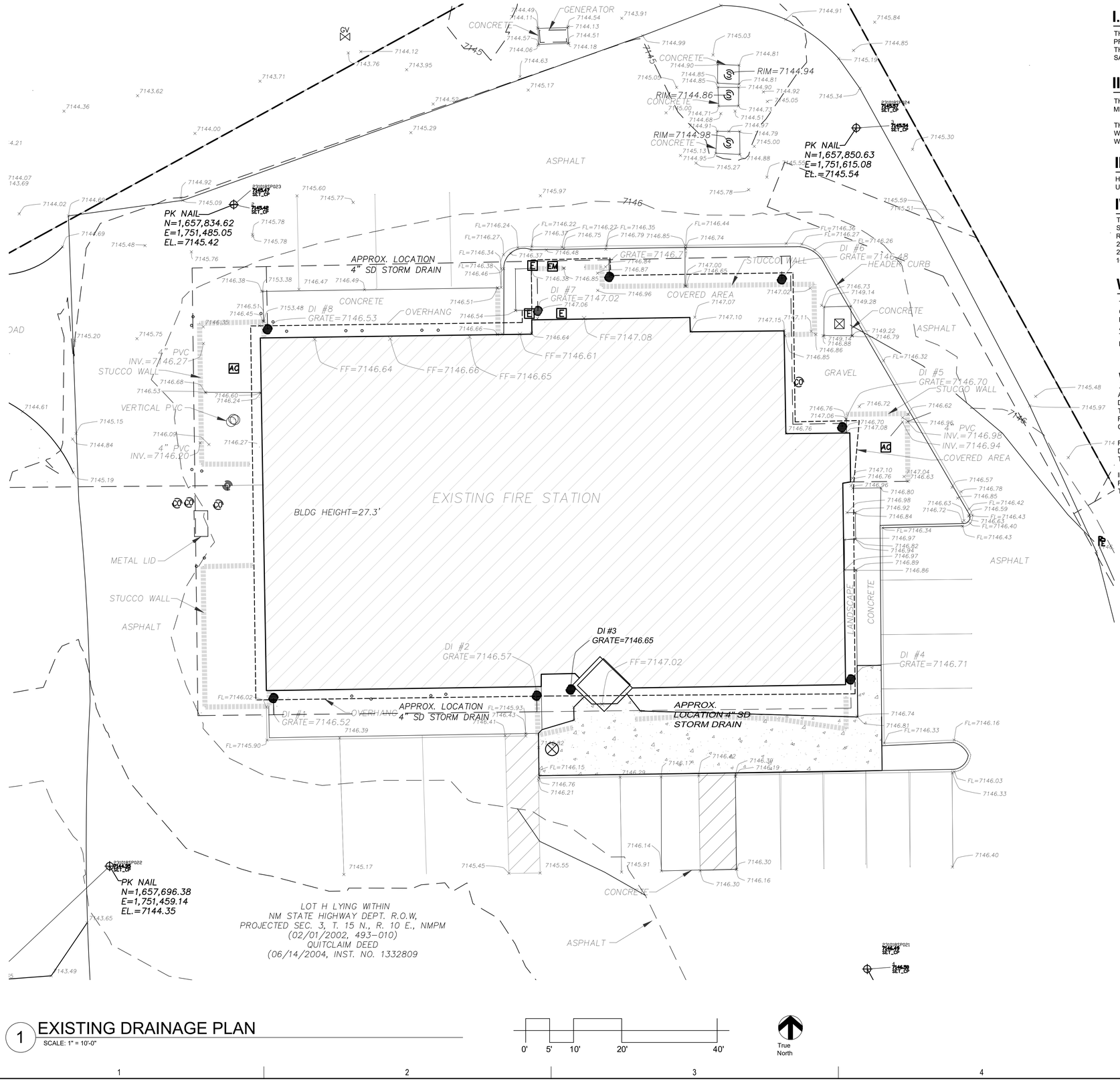

1 EXISTING DRAINAGE PLAN
SCALE: 1" = 10'-0"

0' 5' 10' 20' 40'

True North

I. PURPOSE AND SCOPE

THE PURPOSE OF THIS DRAINAGE PLAN IS TO PRESENT THE EXISTING AND PROPOSED DRAINAGE CONDITIONS FOR THE REMODEL AND MINOR ADDITION TO THE HONDO FIRE STATION. THE SITE IS LOCATED AT 645 OLD LAS VEGAS HIGHWAY, SANTA FE, NM 87505, IN SANTA FE COUNTY.

II. SITE DESCRIPTION AND HISTORY

THE SITE IS CURRENTLY A FIRE STATION, WITH THREE VEHICLE BAYS, AS WELL AS MEETING, AND SLEEPING QUARTERS FOR STAFF.

THE SITE IS DEVELOPED ALONG THE SOUTHERN SIDE OF THE BUILDING WITH A WATER TANK TO FILL TANKER TRUCKS. THERE IS A PONDING ARE LOCATED TO THE WEST OF THE EXISTING BUILDING.

III. COMPUTATIONAL PROCEDURES

HYDROLOGIC ANALYSIS WAS PERFORMED UTILIZING THE DESIGN CRITERIA BASED USDA TR-55.

IV. PRECIPITATION

THE STORM EVENT USED FOR THE FOLLOWING CALCULATIONS IS THE 100YR-24HR STORM. RUNOFF WAS OBTAINED FROM NOAA PRECIPITATION MAPS.
RUNOFF RATES FOR THE 24 HOUR EVENTS ARE AS FOLLOWS:
2 YEAR = 1.62-INCHES
25 YEAR= 2.78-INCHES
100YEAR = 3.47-INCHES

V. EXISTING DRAINAGE CONDITIONS

THE SITE IS DEVELOPED WITH A FIRE STATION, A WATER RESERVOIR AND CIRCULATION DRIVES. THE BUILDING IS LOCATED ON A RIDGE WITH STORMWATER FLOWING BOTH EAST AND WEST. THE BUILDING ROOF IS COLLECTED BY A GUTTER AND DOWNSPOUTS THAT DRAIN INTO A UNDERGROUND SYSTEM THAT CONVEYS THE WATER AN OLD UNDERGROUND HOLDING TANK THAT HAD BEEN UTILIZED FOR FIRE SUPPRESSION FOR THE BUILDING.

VI. PROPOSED DRAINAGE CONDITIONS

A BUILDING ADDITION IS PROPOSED AT THE SOUTHEAST. THE NEW ROOF WILL DRAIN NORTH INTO A VALLEY IN THE ROOF, AND EAST TOWARD A DOWNSPOUT THAT DROPS THE GROUND. STORM RUNOFF FROM THIS NEW DOWNSPOUT WILL FLOW EAST INTO A NEW RETENTION POND THAT IS BEING CREATED TO COMPENSATE FOR THE INCREASED RUNOFF.

RUNOFF WILL NOT INCREASE WITH THE ADDITION AS THE SITE WAS PRIMARILY DEVELOPED AND FULLY PAVED, AND NOW BEING CONVERTED TO ROOF, THEREFORE GENERATING THE SAME AMOUNT OF RUNOFF.

INCLUSION OF THE NEW RETENTION POND WILL CREATE A REDUCTION IN RUNOFF FROM THE SITE, AND WILL PROVIDE WATER HARVESTING TO PROVIDE WATER TO TREES, AND TO INFILTRATE RUNOFF THAT WILL RECHARGE THE AQUIFER.

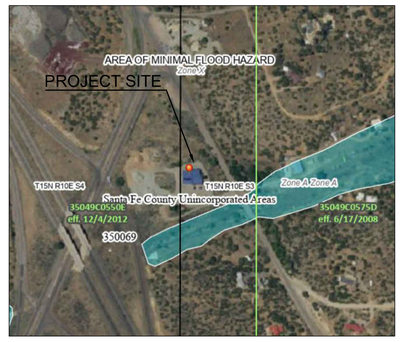

3 FEMA FIRMETTE
NOT TO SCALE

STUDIO SW ARCHITECTS
2101 Mountain Road NW Suite B | Albuquerque NM 87104
505-843-9639 | www.studioswarch.com

© 2025 Studio Southwest Architects, Inc. Duplication or reproduction by any means without the express written consent of Studio Southwest Architects, Inc. is a violation of federal and international law. The information contained in this document is the intellectual property of Studio Southwest Architects, Inc. and all rights thereto are reserved.

CONSULTANTS

Architect

Engineer

DAVID A. AUBE
STATE OF NEW MEXICO
14221
REGISTERED PROFESSIONAL ENGINEER

David A Aube

Digitally signed by David A Aube
DN: cn=David A Aube, email=daa@studioswarch.com, o=Studio Southwest Architects, ou=Civil Department, CN=David A Aube
Date: 2025.08.15 08:47:06'00'

SFC HONDO FIRE STATION

645 OLD LAS VEGAS HIGHWAY
SANTA FE, NM 87505

No	Date	Description
Revision Schedule		

ISSUE:	100% CONSTRUCTION
PROJECT NUMBER:	2502
FILE:	
DRAWN BY:	DAA
CHECKED BY:	DAA
DATE:	AUGUST 15, 2025

SHEET TITLE
EXISTING DRAINAGE PLAN

CD-01

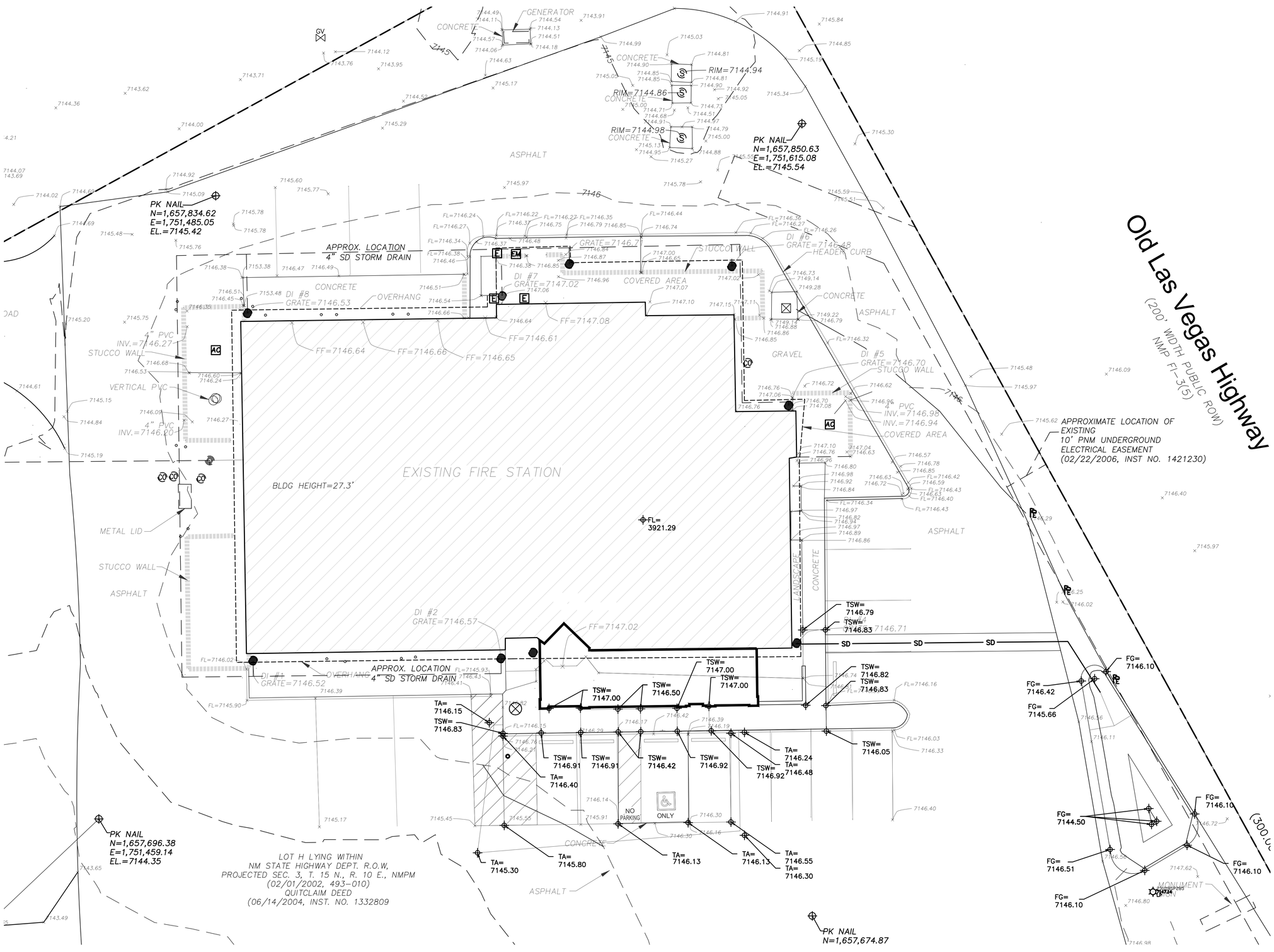

1 PROPOSED DRAINAGE PLAN
SCALE: 1" = 10'-0"

0' 5' 10' 20' 40'

STUDIO SW ARCHITECTS
2101 Mountain Road NW Suite B | Albuquerque NM 87104
505-843-9639 | www.studioswarch.com

© 2025 Studio Southwest Architects, Inc. Duplication or reproduction by any means without the express written consent of Studio Southwest Architects, Inc. is a violation of federal and international law. The information contained in this document is the intellectual property of Studio Southwest Architects, Inc. and all rights thereto are reserved.

CONSULTANTS

Architect Engineer

David A. Aube

SFC HONDO FIRE STATION

645 OLD LAS VEGAS HIGHWAY
SANTA FE, NM 87505

No	Date	Description

Revision Schedule

ISSUE:	100% CONSTRUCTION
PROJECT NUMBER:	2502
FILE:	
DRAWN BY:	DAA
CHECKED BY:	DAA
DATE:	AUGUST 15, 2025

SHEET TITLE

PROPOSED DRAINAGE PLAN

CD-02

2/3/2025 2:32:31 PM

C:\Users\mangeles\Documents\2502_SFC Hondo Fire Station_mangeles547K3.rvt

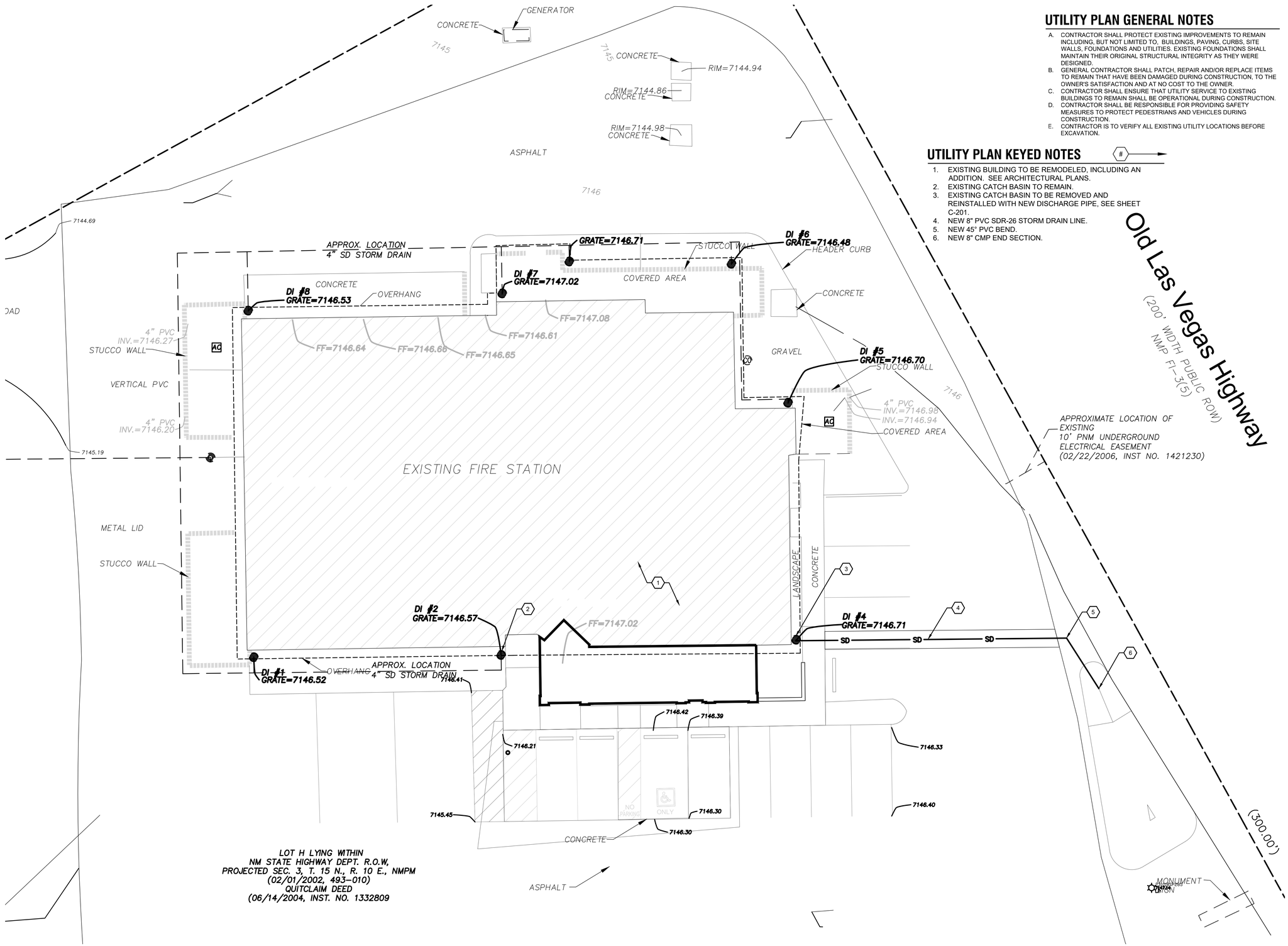

1 SITE UTILITY PLAN
SCALE: 1" = 10'-0"

0' 5' 10' 20' 40'

True North

UTILITY PLAN GENERAL NOTES

A. CONTRACTOR SHALL PROTECT EXISTING IMPROVEMENTS TO REMAIN INCLUDING, BUT NOT LIMITED TO, BUILDINGS, PAVING, CURBS, SITE WALLS, FOUNDATIONS AND UTILITIES. EXISTING FOUNDATIONS SHALL MAINTAIN THEIR ORIGINAL STRUCTURAL INTEGRITY AS THEY WERE DESIGNED.
B. GENERAL CONTRACTOR SHALL PATCH, REPAIR AND/OR REPLACE ITEMS TO REMAIN THAT HAVE BEEN DAMAGED DURING CONSTRUCTION, TO THE OWNER'S SATISFACTION AND AT NO COST TO THE OWNER.
C. CONTRACTOR SHALL ENSURE THAT UTILITY SERVICE TO EXISTING BUILDINGS TO REMAIN SHALL BE OPERATIONAL DURING CONSTRUCTION.
D. CONTRACTOR SHALL BE RESPONSIBLE FOR PROVIDING SAFETY MEASURES TO PROTECT PEDESTRIANS AND VEHICLES DURING CONSTRUCTION.
E. CONTRACTOR IS TO VERIFY ALL EXISTING UTILITY LOCATIONS BEFORE EXCAVATION.

UTILITY PLAN KEYED NOTES

1. EXISTING BUILDING TO BE REMODELED, INCLUDING AN ADDITION. SEE ARCHITECTURAL PLANS.
2. EXISTING CATCH BASIN TO REMAIN.
3. EXISTING CATCH BASIN TO BE REMOVED AND REINSTALLED WITH NEW DISCHARGE PIPE, SEE SHEET C-201.
4. NEW 8" PVC SDR-26 STORM DRAIN LINE.
5. NEW 45° PVC BEND.
6. NEW 8" CMP END SECTION.

STUDIO SW ARCHITECTS
2101 Mountain Road NW Suite B | Albuquerque NM 87104
505-843-9639 | www.studioswarch.com

© 2025 Studio Southwest Architects, Inc. Duplication or reproduction by any means without the express written consent of Studio Southwest Architects, Inc. is a violation of federal and international law. The information contained in this document is the intellectual property of Studio Southwest Architects, Inc. and all rights thereto are reserved.

CONSULTANTS

Architect | Engineer

David A Aube

SFC HONDO FIRE STATION

645 OLD LAS VEGAS HIGHWAY
SANTA FE, NM 87505

No	Date	Description

Revision Schedule

ISSUE:	100% CONSTRUCTION
PROJECT NUMBER:	2502
FILE:	
DRAWN BY:	DAA
CHECKED BY:	DAA
DATE:	AUGUST 15, 2025

SHEET TITLE

SITE UTILITY PLAN

C-301

2/3/2025 2:32:31 PM

C:\Users\mangeles\Documents\2502_SFC Hondo Fire Station_mangeles547K3.rvt

2/3/2025 2:32:31 PM
C:\Users\mangeles\Documents\2502_SFC Hondo Fire Station_mangeles547KS.rvt

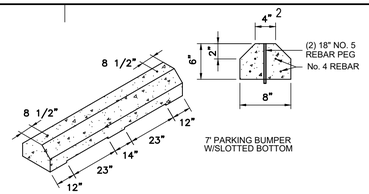

F2 PARKING BLOCK
NOT TO SCALE

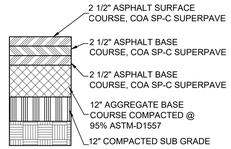

UTILITY PATCH

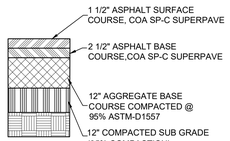

ASPHALT PAVEMENT

D1 ASPHALT PAVEMENT
NOT TO SCALE

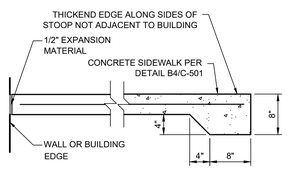

C1 CONCRETE STOOP
NOT TO SCALE

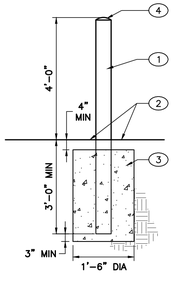

KEYED NOTES: (#)

1. 6" DIA. STEEL PIPE W/ REFLECTORIZED YELLOW PAINT (CONC. FILLED W/ SMOOTH EDGES).
2. FINISHED GRADE OR PAVING AS PER DRAWINGS & SPECS - SEE PLANS.
3. CONCRETE FOOTING.
4. ROUNDED CONCRETE.

A2 BOLLARD, 6"Ø
NOT TO SCALE

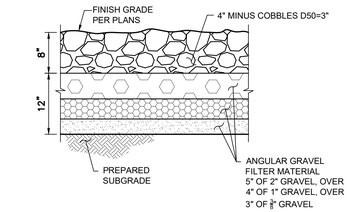

D3 RIPRAP SECTION
NOT TO SCALE

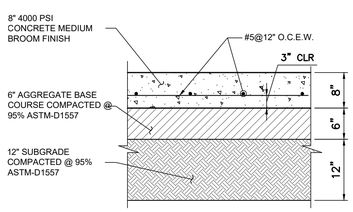

D4 CONCRETE PAVEMENT
NOT TO SCALE

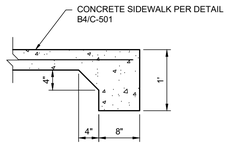

E4 TURNDOWN EDGE
NOT TO SCALE

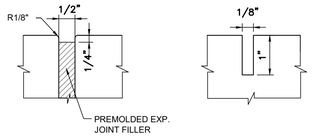

EXPANSION JOINT CONTRACTION JOINT

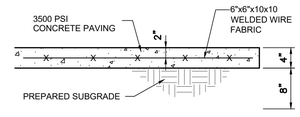

NOTE:
PROVIDE TRANSVERSE CONTRACTION JOINTS AT INTERVALS NOT EXCEEDING 6'-0" ON CENTER. PROVIDE CENTERLINE CONTRACTION JOINTS IN SIDEWALKS WIDER THAN 8'-0". SPACING OF CENTERLINE CONTRACTION JOINTS SHALL NOT EXCEED 6'-0".

PROVIDE EXPANSION JOINTS AT INTERVALS NOT EXCEEDING 30'-0" ON CENTER.

B4 CONCRETE SIDEWALK
NOT TO SCALE

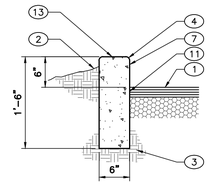

HEADER CURB

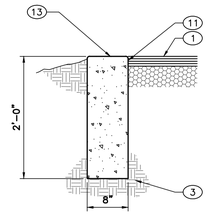

CUT OFF WALL

KEYED NOTES:

1. PAVEMENT SECTION PER DRAWINGS AND SPECS.
2. FINISHED GRADE.
3. PREPARED SUBGRADE.
4. 3/4" RADIUS.
5. 1 1/2" RADIUS.
6. 2" RADIUS (BOTH SIDES).
7. CONCRETE
8. EXPANSION JOINT.
9. VARIES, DEPRESS AS NEEDED.
10. OMIT 6" CURB.
11. TACK COAT.
12. NEW OR EXISTING PAVING.
13. SMOOTH RUBBED FINISH.
14. CONCRETE SIDEWALK.
15. DRIVE NO.4 BARS 18" DEEP IN HOLES DRILLED 2' O.C. SEAL WITH EPOXY.
16. EXTRUDED ASPHALT CURB.

CURB & GUTTER CONSTRUCTION NOTES:

A. CURBS, GUTTERS & CUT-OFF WALLS TO BE CONSTRUCTED OF 3500 PSI P.C.C. UNLESS OTHERWISE NOTED.

B. EDGES NOT SPECIFICALLY DIMENSIONED SHALL BE EDGED WITH A 3/8" EDGING TOOL.

C. REMOVE & REPLACE 12" WIDE STRIP OF PAVEMENT BEYOND LIP OF GUTTER WHEN CONSTRUCTING CURB & GUTTER ADJACENT TO EXISTING A.C. PAVEMENT.

D. DIMENSIONS AT ROUNDED CORNERS MEASURED TO INTERSECTION OF STRAIGHT LINES.

E. FOR 6" CURB & GUTTER PROVIDE CONTROL JTS. @ 6' O.C. MAX. ALSO PROVIDE 1/2" EXPANSION JTS. AT 30' O.C. MAX. AT CURB RETURNS, & AT EACH SIDE OF DRIVEWAYS.

F. FOR ALL OTHER CURBING PROVIDE CONTROL JOINTS @ 10' O.C., PROVIDE EXPANSION JOINTS @ 50' O.C. & ADJACENT TO BUILDINGS AND WALLS.

A5 CURB SECTIONS
NOT TO SCALE

STUDIO SW ARCHITECTS
2101 Mountain Road NW Suite B | Albuquerque NM 87104
505-843-9639 | www.studioswarch.com

© 2025 Studio Southwest Architects, Inc. Duplication or reproduction by any means without the express written consent of Studio Southwest Architects, Inc. is a violation of federal and international law. The information contained in this document is the intellectual property of Studio Southwest Architects, Inc. and all rights thereto are reserved.

CONSULTANTS

Architect

Engineer

DAVID A. AUBE STATE OF NEW MEXICO 14221 REGISTERED PROFESSIONAL ENGINEER

David A Aube

Digitally signed by David A Aube
DN: C=US, E=dave@studioswarch.com, O=Studio Southwest Architects, CN=David A Aube
Date: 2025.08.15 07:58:19-06'00'

SFC HONDO FIRE STATION

645 OLD LAS VEGAS HIGHWAY
SANTA FE, NM 87505

No	Date	Description
Revision Schedule		

ISSUE:	100% CONSTRUCTION
PROJECT NUMBER:	2502
FILE:	
DRAWN BY:	
CHECKED BY:	
DATE:	AUGUST 15, 2025

SHEET TITLE

CIVIL DETAILS

C-501

8/14/2025 2:45:03 PM

SYMBOLS LEGEND

SYMBOL	DESCRIPTION
-	GRID LINES
X / XX	SECTION OR DETAIL CUT
	SHEET NUMBER
X / XX	ELEVATION CUT
	SHEET NUMBER
XXX'-XX"	ELEVATION CALLOUT
X	DRAWING REVISION NUMBER
	CURRENT REVISION CLOUD
	WELDED-WIRE REINFORCEMENT
	ROUGHENED SURFACE, INTENTIONALLY ROUGHEN TO 1/4" AMPLITUDE, UNO
	SERVICE LOAD PROVIDED FOR SPECIALTY DESIGNER
	SERVICE LOAD IN/OUT OF PAGE
	STEP
	SLOPE
1	KEY NOTE
	SUBGRADE
	FORM SAVER

SYMBOL	DESCRIPTION
XX Xi	MECH UNIT (XX.Xk = MECH UNIT OPERATING WEIGHT IN KIPS INCLUDING INERTIA BASE)
X"	EXTENT OF CONCRETE PAD
	PAD THICKNESS
	CAST-IN-PLACE CONCRETE
	SLAB TYPE
	SLAB THICKNESS
SOGXXA	TYPE
XXX'-XX"	T/SLAB
F1	FTG MARK (SF = STRIP FTG)
CXX	COLUMN SIZE OR MARK
X	EXISTING GRID LINES
X'-XX"	DIMENSIONS TO EXISTING STRUCTURE, FIELD VERIFY (ITALICS)
X'-XX"	DIMENSIONS TO NEW STRUCTURE

SYMBOL	DESCRIPTION
XXk BEAM SIZE XXk (XXX'-XX")	STEEL BEAM ELEVATION OF T/STEEL
	ULTIMATE BM REACTION USING LRFD LOAD COMBINATIONS (KIPS)
	BOTTOM FLANGE BRACING CONN, SEE 5/S-500
	DECK TYPE
1.5B	TYPE
	DECK SPAN DIRECTION
	BRACING ABOVE LEVEL
	BRACING BELOW LEVEL
(E) TEXT	EXISTING TEXT

NOTES:

1. ITEMS NOT DESIGNED BY M/M ARE SHOWN HALFTONED
   A. ITEMS INCLUDE:
      a. EXISTING CONSTRUCTION
      b. PERFORMANCE SPECIFIED AND DEFERRED SUBMITTAL ITEMS (STAIRS, RAILINGS, ETC)

ABBREVIATIONS

(E) or EXIST	Existing
/	Per
@	At
ACI	American Concrete Institute
ADDNL	Additional
AFF	Above Finish Floor
ALT	Alternate
APA	American Plywood Association
APPROX	Approximate
AR	Anchor Rod
ARCH	Architect or Architectural
B/ or BO	Bottom of
BAL	Balance
BD	Board
BF	Braced Frame
BLDG	Building
BLKG	Blocking
BM	Beam
BOS	Bottom of Steel
BOT or B	Bottom
BRG	Bearing
BTWN	Between
CC	Center to Center
CF	Cold Formed
CFMF	Cold Formed Metal Framing
CIP	Cast-In-Place
CJ	Control Joint
CJP	Complete Joint Penetration
CL	Centerline
CLG	Ceiling
CLMS	Ceiling/Light/Mechanical/ Superimposed Load
CLR	Clear
COL	Column
CONC	Concrete
CONN	Connection
CONST	Construction
CONT	Continue or Continuous
CONTR	Contractor
COORD	Coordinate
CSJ	Construction Joint
CTR(D)	Center(ed)
D or DL	Dead Load
db	Rebar Diameter
DFS	Deferred Submittal
DIA OR Ø	Diameter

DIAG	Diagonal
DIM	Dimension
DN	Down
DTL(s)	Detail(s)
DWG(s)	Drawing(s)
DWL(s)	Dowels(s)
E	Earthquake Load
E-W	East-West
EA	Each
EC	Epoxy Coated
EE	Each End
EF	Each Face
EJ	Expansion Joint
EL	Elevation
ELEV	Elevator
EMBED	Embedded
ENGR	Engineer
EOR	Engineer-of-Record
EQ	Equal
EQ SP	Equally Spaced
EQUIP	Equipment
ES	Each Side
EW	Each Way
EXP	Expansion
EXP ANCH	Expansion Anchor
EXT	Exterior
FF	Finished Floor
FIN	Finish(ed)
FLG	Flange
FLR	Floor
FND	Foundation
FO	Face of
FS	Far Side
FT	Foot or Feet
FTG	Footing
FV	Field Verify
GA	Gage or Gauge
GALV	Galvanized
GC	General Contractor
GR	Grade or Grind
GR BM	Grade Beam
H	Soil Lateral Load
HAS or HDAS	Headed Anchor Stud
HD	Headed or Holddown
HDAR	Headed Anchor Rod
HDG	Hot Dipped Galvanized
HK	Hook
HORIZ	Horizontal
HT	Height

HVAC	Heating-Ventilating and A/C
I.F.	Inside Face
IN	Inch
INT	Interior
IS	Inside Diameter
JST	Joist
JT	Joint
k	Kip
L	Length or Live Load
LB(S)	Pound(s)
LCE	Compression Embedment
LCS	Compression Lap Splice
LDH	Hook Development Length
LG	Length
LL	Live Load
LLH	Long Leg Horizontal
LLV	Long Leg Vertical
LOC(s)	Location(s) or Locate
LONG	Longitudinal
Lr	Roof Live Load
LSH	Long Side Horizontal
LSV	Long Side Vertical
LT	Light
LTE	Tension Embedment
LTS	Tension Lap Splice Length
LWC	Light Weight Concrete
MACH	Machine
MACH RM	Machine Room
MAS	Masonry
MATL	Material
MAX	Maximum
MECH	Mechanical
MEP	Mech/Elect/Plumb
MIN	Minimum
MISC	Miscellaneous
MLS	Masonry Lap Splice
mm	Millimeter
MNFR	Manufacturer
MTL	Metal
N	North
N-S	North-South
NIC	Not in Contract
NM	Non-Metallic
NO OR #	Number
NOM	Nominal
NS	Non-Shrink or Near Side
NTS	Not to Scale
NWC	Normal Weight Concrete

O.F.	Outside Face
OAE	Or Approved Equivalent
OC	On Center
OD	Outside Diameter
OH	Opposite Hand
OPNG	Opening
OPP	Opposite
OVS	Oversized
PAF	Powder Actuated Fastener
PCA	Portland Cement Association
PEN	Penetration
PERP	Perpendicular
PL	Plate (Steel)
PLF	Pounds Per Lineal Foot
PREFAB	Prefabricated
PRELIM	Preliminary
PSF	Pounds Per Square Foot
PSI	Pounds Per Square Inch
PT	Point or Post-Tension or Pretensioned
QTY	Quantity
R	Radius or Rain Load
RAD	Radius
RC	Reinforced Concrete
RE: or REF	Refer to (Reference)
REINF	Reinforce(ing)(d)(ment)
REQD	Required
REQT(s)	Requirement(s)
RET	Return
S	South
SC	Slip Critical
SCHED	Schedule
SECT	Section
SIM	Similar
SL	Snow Load
SLH	Short Leg Horizontal
SLV	Short Leg Vertical
SOG	Slab on Grade
SP	Space(s)
SP @	Space at
SPECS	Specifications
SPRT	Support
SS	Stainless Steel
SSL	Short-Slotted
STD	Standard
STIFF	Stiffener
STL	Steel
STR	Structural

SW	Shearwall
SYM	Symmetrical
T	Top or Thermal Load
T&B	Top and Bottom
T/ or T.O.	Top of
THK	Thick or Thickness
TL	Total Load
TOC	Top of Concrete
TOF	Top of Footing
TOM	Top of Masonry
TOP	Topping
TOS	Top of Steel
TOW	Top of Wall
TRANS	Transverse
TYP	Typical
ULT	Ultimate
UNO	Unless Noted Otherwise
VERT	Vertical
VIF	Verify in Field
W	Wind Load
W/	With
W/O	Without
WD	Width or Wood
WF	Wide Flange
Wi	Wind-on-Ice Load
WP	Working Point or Waterproofing
WPS	Welding Procedure Specification
WT	Weight
WWR	Welded Wire Reinforcing
WxH	Width x Height

DESIGN CRITERIA

1) CODES AND STANDARDS:

1A) GENERAL DESIGN
- INTERNATIONAL BUILDING CODE 2021

1B) LOADS
- ASCE/SEI 7-16 "MINIMUM DESIGN LOAD FOR BUILDINGS AND OTHER STRUCTURES" WHERE INDICATED ON DRAWINGS INDIVIDUAL UNFACTORED LOAD COMPONENTS (D, DI, L, LR, R, S, H, F, FA, E, W, WI, T) ARE AS DEFINED AND DETERMINED BY THE BUILDING CODES AND STANDARDS INDICATED. LOAD COMPONENTS SHALL BE COMBINED USING THE LOAD COMBINATIONS OF THE BUILDING CODE FOR SPECIALTY DESIGN BY OTHERS.

1C) CONCRETE
- ACI 301-LATEST EDITION "SPECIFICATIONS FOR STRUCTURAL CONCRETE FOR BUILDINGS"
- ACI 318-19 "BUILDING CODE REQUIREMENTS FOR STRUCTURAL CONCRETE"

1D) STEEL
- ANSI/AISC 360-16 "SPECIFICATION FOR STRUCTURAL STEEL BUILDINGS" LOAD AND RESISTANCE FACTOR DESIGN
- ANSI/AISC 341-16 "SEISMIC PROVISIONS FOR STRUCTURAL STEEL BUILDINGS"

2) SEISMIC LOADS
- SEISMIC DESIGN CATEGORY = D
- RISK CATEGORY = IV
- EARTHQUAKE IMPORTANCE FACTOR, Ie = 1.50
- MAPPED SPECTRAL RESPONSE ACCELERATION, Ss = 0.37 g
- MAPPED SPECTRAL RESPONSE ACCELERATION, S1 = 0.12 g
- DESIGN SPECTRAL RESPONSE COEFFICIENT, SDs = 0.511
- DESIGN SPECTRAL RESPONSE COEFFICIENT, SD1 = 0.346
- SOIL SITE CLASS = E
- **STRUCTURAL SEISMIC LATERAL SYSTEM:**
  E-W DIRECTION: STEEL ORDINARY MOMENT FRAME (OMF)
  RESPONSE MODIFICATION FACTOR, R = 3.5
  SEISMIC RESPONSE COEFFICIENT, Cs = 0.219
  SYSTEM OVERSTRENGTH FACTOR, OMEGA = 2.5
  DESIGN BASE SHEAR= 10.2 k
  N-S DIRECTION: STEEL ORDINARY CONCENTRICALLY BRACED FRAME (OCBF)
  RESPONSE MODIFICATION FACTOR, R = 3.25
  SEISMIC RESPONSE COEFFICIENT, Cs = 0.236
  SYSTEM OVERSTRENGTH FACTOR, OMEGA = 2
  DESIGN BASE SHEAR= 11.0 k
- SEISMIC ANALYSIS PROCEDURE: EQUIVALENT LATERAL-FORCE ANALYSIS

3) WIND LOADS
- RISK CATEGORY = IV
- BASIC ULTIMATE WIND SPEED, Vult = 115 mph
- BASIC NOMINAL WIND SPEED, Vasd = 89.1 mph
- EXPOSURE CATEGORY = C
- INTERNAL PRESSURE COEFFICIENT, GCPI = +/-0.18
- TOPOGRAPHIC FACTOR, Kzt = 1.00
- GROUND ELEVATION FACTOR, Ke = 0.77

4) DESIGN WIND PRESSURE FOR COMPONENTS AND CLADDING AND ELEMENTS DESIGNED BY THE CONTRACTOR

4A) LISTED COMPONENT AND CLADDING WIND PRESSURES ARE INCLUDED FOR REFERENCE ONLY. FINAL CALCULATIONS SHALL BE COMPLETED BY CONTRACTOR
4B) PRESSURES LISTED BELOW ARE ULTIMATE
4C) SEE 'WALL CORNER AND SPECIAL ROOF ZONES DIAGRAM'
4D) COMPONENT AND CLADDING SURFACE PRESSURES (PSF)

- **WALLS PRESSURES**

WALLS AREA	10 SF	100 SF	200 SF	500 SF
WALLS INTERIOR NEG ZONE 4	-22.1	-19.1	-18.2	-17.0
WALLS CORNER NEG ZONE 5	-27.2	-21.2	-19.4	-17.0
WALLS POSITIVE ZONES 4 & 5	20.4	17.4	16.5	16.0

- **ROOF PRESSURES**

ROOF AREA	10 SF	100 SF	500 SF
NEGATIVE ZONE 1 & 2E	-41.0	-16.0	-16.0
NEGATIVE ZONE 2N, 2R &3E	-60.0	-33.0	-22.3
NEGATIVE ZONE 3R	-71.3	-37.3	-37.3
POSITIVE ALL ZONES	16.0	16.0	16.0
OVERHANG ZONE 1 & 2E	-47.2	-28.3	-28.3
OVERHANG ZONE 2N & 2R	-66.0	-45.8	-37.7
OVERHANG ZONE 3E	-77.30	-42.2	-28.3
OVERHANG ZONE 3R	-88.6	-43.4	-43.4

5) LATERAL LOAD RESISTING SYSTEM DESCRIPTION:
- METAL DECK DIAPHRAGMS SPANNING TO ORDINARY STEEL MOMENT FRAMES AND ORDINARY CONCENTRICALLY BRACED FRAMES, WHICH TRANSFER LATERAL LOADS INTO THE SOIL THROUGH SHALLOW FOUNDATIONS.

6) GRAVITY LOADS

6A) SEE GRAVITY LOADS TABLE

6B) DRIFTING, SLIDING AND UNBALANCED SNOW
- GROUND SNOW LOAD = 30.0 psf
- SNOW EXPOSURE FACTOR, Ce = 1.00
- SNOW LOAD IMPORTANCE FACTOR, Is = 1.20
- THERMAL FACTOR, Ct = 1.00
- UNIFORM ROOF SNOW LOAD = 25.2 psf
- FLAT ROOF SNOW LOAD = 25.2 psf

7) RAIN LOADS:

7A) DESIGN RAIN INTENSITY = 4.8 INCHES PER HOUR
7B) DESIGN RAIN ROOF PRESSURE = 28.3 PSF

8) FIRE RESISTANCE, CONDITIONS OF RESTRAINT:

8A) FOR DETERMINING FIRE-RESISTANCE RATINGS PER IBC SECTION 703, ALL STEEL FRAMING IS ASSUMED TO BE UNRESTRAINED.

GRAVITY LOADS

LOCATION	SUPERIMPOSED DEAD LOAD (PSF)	LIVE LOAD (PSF)	LIVE LOAD REDUCTION	POINT LOAD (LB)
ROOF	17 (INCLUDES 7 ROOFING LOAD)	SEE NOTE 6B FOR SNOW LOADS	NO	300

STRUCTURAL DRAWING LIST

SHEET NUMBER	SHEET TITLE
S-001	NOTES
S-002	NOTES
S-003	NOTES
S-100	OVERALL FOUNDATION PLAN
S-101	LEVEL 1 ENLARGED PLAN
S-102	ROOF ENLARGED PLAN
S-200	ELEVATIONS
S-201	SECTIONS
S-300	FOUNDATION DETAILS
S-301	FOUNDATION DETAILS
S-310	CONCRETE DETAILS
S-320	SLAB REPAIR DETAILS
S-500	STEEL DETAILS
S-501	STEEL DETAILS
S-502	STEEL DETAILS
S-510	COLD FORMED FRAMING DETAILS

FOUNDATION NOTES

1) DESIGN CRITERIA:

THE GEOTECHNICAL REPORT PREPARED BY KIVA TECHNOLOGIES, NUMBER 25-0173, DATED 05/06/2025 PROVIDED CRITERIA FOR THE FOUNDATION DESIGN FOR THE PROJECT.

2) FOOTINGS:

2A) FOOTING DESIGN CRITERIA:
- MAXIMUM TOTAL LOAD BEARING PRESSURE = 2000 PSF
- MINIMUM CONTINUOUS FOOTING WIDTH = 1.5 FT
- MINIMUM SPREAD FOOTING WIDTH = 2 FT
- ULTIMATE COEFFICIENT OF FRICTION TO RESIST LATERAL LOADS = 0.32
- FROST DEPTH TO BOTTOM OF FOUNDATION = 24 IN

3) STEM/RETAINING WALLS:

3A) EQUIVALENT FLUID PRESSURES USED FOR WALL DESIGN:
- "ACTIVE" CONDITION = 33 PCF
- "AT REST" CONDITION = 50 PCF
- "PASSIVE" CONDITION = 303 PCF
- ULTIMATE COEFFICIENT OF FRICTION TO RESIST LATERAL LOADS = 0.32

3B) WALL DESIGN BASED ON IN-SITU-SOILS ADJACENT TO STEM/RETAINING WALLS. SEE GEOTECHNICAL REPORT FOR REQUIREMENTS.

4) OVER-EXCAVATION

4A) EXCAVATE AND FILL WITH STRUCTURAL FILL 3'-0" MINIMUM BELOW BOTTOM OF FOOTINGS/SOG AND 3'-0" MINIMUM BEYOND BUILDING PERIMETER.
4B) SEE 3/S-300 FOR OVEREXCAVATION AND FILL REQUIREMENTS

STUDIO SW ARCHITECTS
2101 Mountain Road NW Suite B | Albuquerque NM 87104
505-843-9639 | www.studioswarch.com

© 2025 Studio Southwest Architects, Inc. Duplication or reproduction by any means without the express written consent of Studio Southwest Architects, Inc. is a violation of federal and international law. The information contained in this document is the intellectual property of Studio Southwest Architects, Inc. and all rights thereto are reserved.

CONSULTANTS

MARTIN/MARTIN CONSULTING ENGINEERS
6100 Indian School Road NE, Suite 225 | Albuquerque, NM 87110
505.242.4435 martinmartin.com

Architect

Engineer

DANIEL MULLINS NEW MEXICO 29362 08/15/2025 PROFESSIONAL ENGINEER

SFS HONDO FIRE STATION EXPANSION

645 OLD LAS VEGAS HIGHWAY SANTA FE, NM 87505

No	Date	Description
Revision Schedule		

ISSUE:	100% CONSTRUCTION DOCUMENTS
PROJECT NUMBER:	25.0149.S.01
FILE:	
DRAWN BY:	EM
CHECKED BY:	JO
DATE:	AUGUST 15, 2025

SHEET TITLE

NOTES

S-001

DESIGNERS: JAAN YANG
LEAD REVIT TECH: ELENA MAN
DATE PRINTED: 8/14/2025 2:45:03 PM
FILE PATH: Autodesk Docs://ACC-MM SS\25.0149.S.01 - HONDO FIRE STATION EXPANSION - S25.rvt
MM JOB #: 25.0149.S.01
PRINCIPAL: BENJAMIN DOWNEY
EOR: DAN MULLINS
PROJECT MANAGER: JONATHAN GLTMAN

8/14/2025 2:45:03 PM

DEFERRED SUBMITTALS

1) GENERAL:

1A) THE FOLLOWING PORTIONS OF THE STRUCTURAL DESIGN WILL NOT BE SUBMITTED AT THE TIME OF PERMIT APPLICATION. WHEN RECEIVED AND REVIEWED, THESE DEFERRED SUBMITTAL ITEMS SHALL BE SUBMITTED TO THE BUILDING OFFICIAL BY THE CONTRACTOR:
- CURTAIN WALL/STOREFRONT
- ARCHITECTURAL/METAL CLADDING PANEL
- COLD-FORMED METAL FRAMING
- METAL RAILINGS
- ANCHORAGE, BRACING AND ATTACHMENT OF REQUIRED ARCHITECTURAL, MECHANICAL, ELECTRICAL, PLUMBING, FIRE SPRINKLER, AND OTHER EQUIPMENT AND SYSTEMS.
- TEMPORARY SHORING, WHERE REQUIRED

1B) CONNECTION OF DEFERRED SUBMITTAL ITEMS TO PRIMARY STRUCTURE BY DEFERRED SUBMITTAL SUPPLIER. DEFERRED SUBMITTAL SUPPLIER TO PROVIDE CONNECTIONS AND FRAMING ARRANGEMENT TO AVOID LOADING WHICH EXCEEDS THE CAPACITY OF THE ELEMENT BEING ATTACHED TO. REFERENCE LOAD MAPS FOR MECHANICAL, ELECTRICAL, PLUMBING AND FIRE SPRINKLER LOAD ALLOWANCES.

1C) ALL DEFERRED SUBMITTALS TO BE ATTACHED TO PRIMARY STRUCTURE WITH A PINNED CONNECTION. MOMENT CONNECTIONS TO PRIMARY STRUCTURE NOT PERMITTED UNLESS NOTED ON DRAWINGS OR APPROVED BY ENGINEER IN WRITING PRIOR TO SUBMITTAL OF DRAWINGS OR CALCULATIONS.

1D) LOADING AND LOCATION FOR ATTACHMENT OF DEFERRED SUBMITTAL ITEMS ARE NOTED ON DRAWINGS AND ARE NOT TO BE RELOCATED OR INCREASED WITHOUT WRITTEN APPROVAL.

1E) SUBMIT STAMPED STRUCTURAL CALCULATIONS FOR ALL DEFERRED SUBMITTAL ITEMS PRIOR TO OR CONCURRENTLY WITH DRAWINGS OR PRODUCT DATA. INCLUDE ANALYSIS OF ATTACHMENT TO PRIMARY STRUCTURE. INCLUDE CURRENT ICC REPORT WITH ALL PROPRIETARY STRUCTURAL ELEMENTS AND ANCHORS/FASTENERS.

1F) POWDER ACTUATED FASTENERS (PAF) INTO CONCRETE OR CMU SHALL NOT BE USED TO RESIST TENSION LOADS. POWDER ACTUATED FASTENERS SHALL NOT BE USED TO RESIST GRAVITY LOADS WHICH INCLUDE BRICK VENEER.

1G) REFERENCE COLD-FORMED STEEL FRAMING NOTES FOR ADDITIONAL DEFERRED SUBMITTAL DESIGN CRITERIA.

METAL GAUGE CONVERSION

GAUGE	MINIMUM THICKNESS (MILS*)
22	27
20	33
18	43
16	54
14	68
12	97

NOTES:

* 1 MIL = 1/1000"

MASONRY NOTES

1) DESIGN STRENGTH:
1A) DEVELOP 1500 PSI COMPRESSIVE STRENGTH (F'M) IN 28 DAYS.

1B) STEEL REINFORCING:
-PRIMARY REINFORCING: ASTM A615, 60 KSI
-HORIZONTAL JOINT REINFORCING: ASTM A951, PREFABRICATED, LADDER TYPE

2) SPLICES:
2A) SEE MASONRY DETAILS FOR LAP LENGTHS.

3) INSTALLATION REQUIREMENTS:
3A) GROUT SOLID ALL CELLS CONTAINING REINFORCING, EMBEDDED ITEMS, AND ALL OTHER CELLS NOTED ON THE CONTRACT DOCUMENTS.

STEEL NOTES

1) CONNECTIONS:

1A) PROVIDE CONNECTIONS AS SHOWN IN THE STEEL BEAM CONNECTION SCHEDULES AND DETAILS HEREIN. REFER TO SPECIFICATION FOR ALTERNATIVES AND CONNECTIONS NOT SHOWN.

2) STEEL MATERIALS:

2A) SEE 'STEEL MATERIAL TABLE'

3) WELDING REQUIREMENTS:

3A) WELDERS: HAVE IN POSSESSION CURRENT EVIDENCE OF PASSING THE APPROPRIATE AWS. QUALIFICATION TESTS.

3B) MINIMUM WELDS: AISC SPECIFICATION, NOT LESS THAN 3/16" FILLET, CONTINUOUS UNLESS OTHERWISE NOTED.

3C) WELD SIZES AND LENGTHS CALLED FOR ON THE DRAWINGS ARE THE NET EFFECTIVE REQUIRED. INCREASE WELD SIZE IF GAPS EXIST AT THE FAYING SURFACE.

3D) WELD SIZES SHALL BE AS SHOWN UNLESS A GREATER SIZE IS REQUIRED BY ANSI/AISC 360-16 TABLES J2.3 AND J2.4.

3E) ALL GROOVE WELDS SHALL BE COMPLETE PENETRATION UNLESS NOTED.

3F) FIELD WELDING SYMBOLS INDICATE SEQUENCE CONSIDERED DURING DESIGN. THE CONTRACTOR SHALL REQUEST APPROVAL FROM THE ENGINEER TO MODIFY WELD INSTALLATION LOCATION INDICATED ON THE DOCUMENTS:
- FROM SHOP TO FIELD
- FROM FIELD TO SHOP

4) STRUCTURAL STEEL INSTALLATION:

4A) UNLESS INDICATED OTHERWISE, SNUG TIGHTEN ALL JOINTS AS DEFINED BY AISC CONNECTIONS AS INDICATED BELOW SHALL BE PRETENSIONED PER TABLE J3.1 OF ANSI/AISC 360-16
- WHERE NOTED ON THE DRAWINGS AS "PT"

5) METAL DECK:

5A) SEE 'METAL DECK SCHEDULE' FOR MATERIALS, PROFILE, AND CONNECTIONS TO STRUCTURE.

5B) QUALITY CONTROL AND QUALITY ASSURANCE FOR STEEL DECK INSTALLATION SHALL BE IN ACCORDANCE WITH SDI QA/QC-2022, "STANDARD FOR QUALITY CONTROL AND QUALITY ASSURANCE FOR THE INSTALLATION OF STEEL DECK" AS MODIFIED BY TABLE C-1 CONTAINED IN THE COMMENTARY TO THAT STANDARD.

5C) DECK DESIGN IS IN ACCORDANCE WITH STEEL DECK INSTITUTE (SDI) FLOOR DECK DESIGN MANUAL (2020), SDI ROOF DECK DESIGN MANUAL (2020), AND SDI DIAPHRAGM DESIGN MANUAL, 4TH EDITION (2015).

5D) REINFORCE OPENINGS IN METAL ROOF DECK IN ACCORDANCE WITH TYPICAL DECK OPENING DETAILS.

5E) INSTALL DECK OVER 4 SUPPORTS (3 SPAN CONTINUOUS) UNLESS NOTED OTHERWISE. DO NOT INSTALL DECK AS SINGLE SPAN UNLESS SPECIFICALLY SHOWN ON DRAWINGS.

5F) PROVIDE DECK ATTACHMENTS AS NOTED ON DRAWINGS.
5G) HANGERS: SEE TYPICAL METAL DECK DETAILS FOR ALLOWABLE HANGER LOADS, SPACING AND ATTACHMENT.

6) STRUCTURAL COLD FORMED METAL FRAMING:

6A) REFER TO DETAILS FOR CONNECTIONS AND OTHER REQUIREMENTS.

6B) COLD FORMED METAL FRAMING IS A PERFORMANCE SPECIFIED ITEM DESIGNED BY THE CONTRACTOR. PROVIDE STUD DEPTH INDICATED ON THE DRAWINGS. DO NOT EXCEED MAXIMUM SPACING INDICATED. VARY FLANGE WIDTH, GAGE, YIELD STRENGTH, BRACING, STUD SPACING, ETC. AS REQUIRED TO SATISFY PERFORMANCE CRITERIA IN THE CONTRACT DOCUMENTS. MINIMUM STUD GAGE SPECIFIED IS REQUIRED FOR ATTACHMENT OF OTHER MATERIALS TO STUDS. DO NOT BASE BIDS ON MINIMUM GAGE OR MAXIMUM SPACING SPECIFIED.

6C) REFER TO DETAILS FOR MINIMUM CONNECTIONS AND OTHER REQUIREMENTS. DO NOT IMPOSE FORCES ON THE BUILDING STRUCTURE IN DIRECTIONS OR AT LOCATIONS OTHER THAN THAT SHOWN ON THE STRUCTURAL DRAWINGS. CONNECTIONS TO CONCRETE SHALL NOT USE PAFS TO RESIST TENSION LOADS.

STEEL MATERIAL TABLE

STEEL ELEMENT	ASTM / TYPE	Fy (KSI)	Fu (KSI)	COMMENTS
ANCHOR RODS AND THROUGH BOLTS	F1554 GR 55	55	75	WELDABLE, HEAVY HEX HEADED
BOLTS	F3125 - TYPE A325 OR F1852	-	120	BOLTS ARE 3/4"Ø UNO, USE TENSION-CONTROLLED WHERE POSSIBLE
CHANNELS ≤ 12" DEEP	ASTM A572	50	65	-
COLD-FORMED STUDS/PLATE, 33 AND 43 MIL	A1003	33	-	-
COLD-FORMED STUDS/PLATE, 54 MIL AND HEAVIER	A1003	50	-	-
COLD-FORMED TRACK, ALL THICKNESSES	A1003	33	-	-
METAL DECKING	A1008/A653	50	-	-
OTHER SHAPES	A572	50	65	-
PIPE 12" AND SMALLER	A500 GR B	42	58	-
PLATES	A572	50	65	-
RECT HSS	A500 GR C	50	62	-
WELDING ELECTRODES, THICKNESS OF THINNER PART > 0.1 INCHES (12 GA)	E70	-	-	PER AWS
WELDING ELECTRODES, THICKNESS OF THINNER PART ≤ 0.1 INCHES (12 GA)	E60 OR E70	-	-	PER AWS
WF, WT	A992	50	65	-

CONCRETE NOTES

CONCRETE MIX TABLE

CONC MIX TYPE	INTENDED USE	EXPOSURE CATEGORIES AND CLASSES	COMPRES-SIVE STRENGTH f'c (KSI)	TEST AVG (DAYS)	CONC WEIGHT	MAX W/C RATIO, INCLUDING SCM, NOTE 6	MAX AGGRE-GATE SIZE (IN), NOTE 3	TOTAL AIR CONTENT (%), NOTE 4	OTHER REQTS
1	FOOTINGS	F0, S0, W1, C1	3	28	NWC	-	1	-	-
2	INTERIOR SLABS-ON-GRADE WITH MOISTURE SENSITIVE FLOORING	F0, S0, W0, C0	3	28	NWC	-	1	NP	-
3	ALL CONCRETE OTHERWISE NOT SPECIFIED	F3, S0, W1, C2	5	28	NWC	0.40	3/4	6	-

CONCRETE MIX TABLE ABBREVIATIONS:
- FX = FREEZING AND THAWING CLASS
- SX = SULFATE CLASS
- WX = IN CONTACT WITH WATER CLASS
- NWC = NORMAL WEIGHT CONCRETE
- SCM = SUPPLEMENTARY CEMENTITIOUS MATERIAL

CONCRETE MIX TABLE NOTES:

1) CONCRETE MIX DESIGNS ARE A PERFORMANCE SPECIFIED ITEM DESIGNED BY THE CONTRACTOR. THE CONTRACTOR SHALL PROVIDE A CONCRETE MIX MEETING THE PERFORMANCE REQUIREMENTS SPECIFIED IN THE "CONCRETE MIX TABLE" IN ADDITION TO THE REQUIREMENTS BELOW

2) PROPORTIONS OF MATERIALS IN CONCRETE MIXES SHALL BE ESTABLISHED TO:
2A) PROVIDE THE MINIMUM COMPRESSIVE STRENGTH INDICATED IN THE MIX TABLE. DO NOT EXCEED THE MAXIMUM WATER-CEMENT RATIO

2B) PROVIDE WORKABILITY AND CONSISTENCY FOR SLAB FINISHING AND TO PERMIT CONCRETE TO BE WORKED READILY INTO FORMS AND AROUND REINFORCEMENT UNDER CONDITIONS OF PLACEMENT TO BE EMPLOYED WITHOUT SEGREGATION OR EXCESSIVE BLEEDING. CONTRACTOR SHALL SELECT APPROPRIATE SLUMP. USE ADMIXTURES AS REQUIRED TO OBTAIN DESIRED RESULTS

2C) FOR CONCRETE PLACED BY PUMPING, PROVIDE CONCRETE MIX FLOW ABILITY TO FACILITATE PUMPING. ENTRAINED AIR MAY BE USED TO FACILITATE PUMPING SUBJECT TO THE PROVISIONS OF NOTE 4 BELOW

3) FOR THE MAXIMUM COARSE AGGREGATE SIZE INDICATED, USE THE FOLLOWING AGGREGATE SIZE NUMBERS PER ASTM C33:
- 3/8": #8 AGGREGATE
- 1/2": #7 AGGREGATE
- 3/4": #67 AGGREGATE
- 1": #57 AGGREGATE
- 1 1/2": #467 AGGREGATE

4) WHERE AIR CONTENT IS INDICATED IN THE MIX TABLE, PROVIDE AIR ENTRAINING ADMIXTURE TO MEET THE SPECIFIED AIR PERCENTAGE. TOTAL AIR CONTENT LIMITS INCLUDE BOTH ENTRAINED AND ENTRAPPED AIR ± 1/2%. "NP" IN COLUMN INDICATES ADDITION OF ENTRAINED AIR IS NOT PERMITTED EXCEPT WHERE CONTRACTOR CAN DEMONSTRATE SLABS WITH ENTRAINED AIR WILL HAVE A FINISH ACCEPTABLE TO THE ARCHITECT WITHOUT BLISTERS. AIR CONTENT NOTED IS BASED ON 3/4" AGGREGATE. IF 3/8" AGGREGATE IS USED, INCREASE AIR CONTENT BY 1% FOR THE F1 EXPOSURE CLASS AND 1 1/2% FOR F2 AND F3 EXPOSURE CLASSES.

5) FOR EXPOSED CONCRETE FLOORS, THE CONTRACTOR SHALL ENSURE THE FLOOR FINISH IS ACCEPTABLE TO THE ARCHITECT AND OWNER WITH THE SELECTED CEMENT TYPE, CEMENT CONTENT, AND FINISHING PROCEDURE

6) SEE SPECIFICATIONS FOR SUPPLEMENTARY CEMENTITIOUS MATERIAL (SCM) REQUIREMENTS

7) FOR CONCRETE MIXTURES ASSIGNED TO EXPOSURE CLASS F3, THE MAXIMUM PERCENTAGE OF CEMENTITIOUS MATERIAL WHICH IS CLASSIFIED AS SCM (INCLUDING FLY ASH, NATURAL POZZOLANS, SILICA FUME, AND SLAG CEMENT) SHALL BE AS FOLLOWS. THE INDIVIDUAL LIMITS SHOWN BELOW SHALL APPLY REGARDLESS OF THE NUMBER OF CEMENTITIOUS MATERIALS IN THE CONCRETE MIXTURE.
- FLY ASH OR NATURAL POZZOLANS CONFORMING TO ASTM C618 = 25%
- SLAG CEMENT CONFORMING TO ASTM C989 = 50%
- SILICA FUME CONFORMING TO ASTM C1240 = 10%
- TOTAL OF FLY ASH OR OTHER POZZOLANS AND SILICA FUME = 35%
- TOTAL OF FLY ASH OR OTHER POZZOLANS, SLAG CEMENT, AND SILICA FUME = 50%

8) BASED ON THE SULFATE CLASSIFICATIONS LISTED IN THE 'CONCRETE MIX TABLE' THE FOLLOWING CEMENTS SHALL BE USED. SEE SPECIFICATIONS FOR ADDITIONAL REQUIREMENTS:
8A) S0 SULFATE CLASSIFICATION: PORTLAND CEMENT ASTM C150 TYPE I/II OR BLENDED HYDRAULIC CEMENT ASTM C595 TYPES

8B) S1 SULFATE CLASSIFICATION: PORTLAND CEMENT ASTM C150 TYPE II OR BLENDED HYDRAULIC CEMENT ASTM C595 TYPES WITH "MS" DESIGNATION. MINERAL FILLERS DERIVED FROM CARBONATE AGGREGATE ARE PROHIBITED

8C) S2 AND S3 SULFATE CLASSIFICATION: PORTLAND CEMENT ASTM C150 TYPE V OR BLENDED HYDRAULIC CEMENT ASTM C595 TYPES WITH "HS" DESIGNATION CALCIUM CHLORIDE ADMIXTURES NOT PERMITTED. MINERAL FILLERS DERIVED FROM CARBONATE AGGREGATE ARE PROHIBITED. AT CONTRACTOR'S OPTION ACCEPTABLE IN LIEU OF TYPE V OR TYPE "HS" TO PROVIDE ALTERNATE CEMENTITIOUS MATERIALS FOR SULFATE EXPOSURE AND RESISTANCE CONFORMING TO ACI 318-19 26.4.2.2(C)

9) FOR CONCRETE MIXTURES ASSIGNED TO W1 OR W2 CLASSES, EVIDENCE SHALL BE SUBMITTED THAT THE CONCRETE MIXTURES COMPLIES WITH THE FOLLOWING
9A) AGGREGATES ARE NOT ALKALI-SILICA REACTIVE OR MEASURES TO MITIGATE ALKALI-SILICA REACTIVITY HAVE BEEN ESTABLISHED

9B) AGGREGATES ARE NOT ALKALI-CARBONATE REACTIVE

10) MAXIMUM CHLORIDE ION LIMITS (PERCENTAGE BY MASS OF CEMENTITIOUS MATERIALS INCLUDING SCM) ASSOCIATED WITH EXPOSURE CLASS IN "CONCRETE MIX TABLE" ARE AS FOLLOWS:
- C0 = 1.00, C1 = 0.30, C2 = 0.15

1) GENERAL:

1A) ALL WORK SHALL CONFORM WITH ACI 301-10, UNLESS NOTED OTHERWISE IN DRAWINGS OR PROJECT SPECIFICATIONS.

1B) DETAIL BARS IN ACCORDANCE WITH THE DRAWINGS, PROJECT SPECIFICATIONS, AND ACI PUBLICATION SP-66 (2004): "ACI DETAILING MANUAL"

2) REINFORCING MATERIALS:

2A) SEE 'REINFORCING MATERIAL TABLE'

3) REINFORCING FABRICATION:

3A) SPLICES:
- NO SPLICING OF REINFORCEMENT PERMITTED EXCEPT AS NOTED ON DRAWINGS. MAKE BARS CONTINUOUS AROUND CORNERS WHERE DETAIL NOT PROVIDED. WHERE PERMITTED, SPLICES MAY BE MADE BY CONTACT LAPS
- SEE 'LAP SPLICE SCHEDULE' FOR LAP LENGTHS.
- SPLICE BARS NOTED AS CONTINUOUS 'LTS' UNLESS NOTED OTHERWISE.

3B) MISCELLANEOUS REINFORCING REQUIREMENTS:
- PROVIDE ADDITIONAL BARS OR STIRRUPS REQUIRED TO SECURE REINFORCING IN PLACE DURING CONCRETE PLACEMENT.
- MAKE ALL REINFORCING BAR BENDS IN THE FABRICATOR'S SHOP UNLESS NOTED.
- NO WELDING OF REINFORCING PERMITTED UNLESS NOTED ON DRAWINGS. WHERE PERMITTED, PERFORM WELDING IN ACCORDANCE WITH AWS D1.4-2011.
- PROVIDE ADDED REINFORCING TO TRIM ALL OPENINGS, NOTCHES, AND REENTRANT CORNERS AS NOTED IN TYPICAL DETAILS.

4) STRUCTURAL CONCRETE MIX REQUIREMENTS:

4A) SEE 'CONCRETE MIX TABLE'

5) SLAB-ON-GRADE:

5A) VERIFY ALKALINITY OF CONCRETE SURFACE, SLAB VAPOR TRANSMISSION, AND SLAB FLATNESS/LEVELNESS ARE COMPATIBLE WITH FLOORING SYSTEM AND ADHESIVES PRIOR TO INSTALLING FLOORING.

5B) TAKE PRECAUTIONS TO MINIMIZE SLAB CURLING. GRIND SLAB OR USE LEVELING COMPOUND IF FLOOR FLATNESS AND LEVELNESS VALUES ARE NOT ACCEPTABLE TO THE ARCHITECT.

6) NON-SHRINK GROUT:

6A) CONFORM TO ASTM C1107

6B) ACHIEVE 6000 PSI COMPRESSIVE STRENGTH AT 28 DAYS.

7) PLACING REINFORCEMENT:

7A) REINFORCEMENT PROTECTION:
- SEE 'REBAR COVER TABLE'
- SEE ACI 117-10 FOR REINFORCEMENT PLACING TOLERANCES

7B) PROVIDE ACCESSORIES NECESSARY TO PROPERLY SUPPORT REINFORCING AND WELDED WIRE REINFORCEMENT AT POSITIONS SHOWN ON PLANS. ALL REINFORCING, DOWELS, BOLTS, AND EMBEDDED PLATES SHALL BE SET AND TIED IN PLACE BEFORE THE CONCRETE IS POURED. "STABBING" INTO PREVIOUSLY PLACED CONCRETE IS NOT PERMITTED.

8) CONSTRUCTION/CONTROL JOINTS:

8A) SUBMIT DRAWINGS SHOWING CONSTRUCTION AND CONTROL JOINT LOCATIONS ALONG WITH THE SEQUENCE OF POURS. CONSTRUCTION JOINT LOCATIONS AND CASTING SEQUENCE SHALL BE ARRANGED TO MINIMIZE THE EFFECTS OF ELASTIC AND LONG-TERM SHORTENING/SHRINKAGE.

8B) CONCRETE CONSTRUCTION JOINT SURFACE SHALL BE CLEANED AND ALL LAITANCE AND LOOSE MATERIAL REMOVED PRIOR TO SECOND CONCRETE PLACEMENT.

9) MODIFICATIONS TO HARDENED OR EXISTING CONCRETE

9A) UNLESS NOTED ON THE STRUCTURAL DOCUMENTS MODIFICATIONS AS LISTED BELOW SHALL NOT BE MADE TO HARDENED OR EXISTING CONCRETE WITHOUT APPROVAL OF THE ARCHITECT:
- SAW CUTTING
- CORING
- CHIPPING

9B) DO NOT CUT OR DAMAGE ANY REINFORCING WITHOUT APPROVAL OF THE ARCHITECT

10) SLEEVES, OPENINGS, AND EMBEDED PIPE/CONDUITS:

10A) REINFORCING
- REFER TO TYPICAL DETAILS FOR REINFORCEMENT REQUIREMENTS AT SLEEVES, OPENINGS OR CONDUIT
- DO NOT CUT REINFORCING WHICH MAY CONFLICT

REINFORCING MATERIAL TABLE

REINF ELEMENT	ASTM	Fy (KSI)	Fu (KSI)	COMMENTS
TYP REINFORCING	A615	60	90	-
WELDED	A706	60	80	-
WELDED WIRE REINFORCING, SMOOTH	A1064	65	75	-
EPOXY COATING OF REINFORCING	A775 OR A934	-	-	-

STUDIO SW ARCHITECTS
2101 Mountain Road NW Suite B | Albuquerque NM 87104
505-843-9639 | www.studioswarch.com

© 2025 Studio Southwest Architects, Inc. Duplication or reproduction by any means without the express written consent of Studio Southwest Architects, Inc. is a violation of federal and international law. The information contained in this document is the intellectual property of Studio Southwest Architects, Inc. and all rights thereto are reserved.

CONSULTANTS

MARTIN/MARTIN CONSULTING ENGINEERS
6100 Indian School Road NE, Suite 225 | Albuquerque, NM 87110
505.242.4435 martinmartin.com

Architect

Engineer

DANIEL MULLINS NEW MEXICO 29362 08/15/2025 PROFESSIONAL ENGINEER

SFS HONDO FIRE STATION EXPANSION

645 OLD LAS VEGAS HIGHWAY SANTA FE, NM 87505

No	Date	Description
Revision Schedule		

ISSUE:	100% CONSTRUCTION DOCUMENTS
PROJECT NUMBER:	25.0149.S.01
FILE:	
DRAWN BY:	EM
CHECKED BY:	JO
DATE:	AUGUST 15, 2025

SHEET TITLE

NOTES

S-002

DESIGNERS: JAAN YANG
LEAD REVIT TECH: ELENA MAN
DATE PRINTED: 8/14/2025 2:45:03 PM
FILE PATH: Autodesk Docs://ACC-MM S25\25.0149.S.01 - HONDO FIRE STATION EXPANSION - S25.rvt
MM JOB #: 25.0149.S.01
PRINCIPAL: BENJAMIN DOWNEY
EOR: DAN MULLINS
PROJECT MANAGER: JONATHAN OLTMAN

GENERAL NOTES

1) GENERAL:

1A) ENGINEER: REFERENCES ON THE STRUCTURAL DRAWINGS TO 'ENGINEER' MEAN THE STRUCTURAL ENGINEER OF RECORD. OTHER ENTITIES ARE SPECIFICALLY NOTED AS "CONTRACTOR'S ENGINEER", "MECHANICAL ENGINEER", ETC.

1B) THESE NOTES SUPPLEMENT THE SPECIFICATIONS, WHICH SHALL BE REFERENCED FOR ADDITIONAL REQUIREMENTS.

1C) UNDERGROUND UTILITIES: LOCATE EXISTING UTILITIES AND NOTIFY ARCHITECT OF EXISTING UTILITIES OR SUBGRADE CONDITIONS WHICH INTERFERE WITH WORK.

1D) STRUCTURAL ELEMENTS ARE CENTERED ON GRID LINES AND GRID LINE INTERSECTIONS UNLESS DIMENSIONED OTHERWISE.

2) USE OF DRAWINGS:

2A) DO NOT SCALE DRAWINGS.

2B) DETAILS ON DRAWINGS TAKE PRECEDENCE OVER GENERAL NOTES AND TYPICAL DETAILS.

2C) DETAILS NOTED TYPICAL APPLY TO ALL SIMILAR CONDITIONS. WHERE NO SPECIFIC DETAILS ARE SHOWN, CONSTRUCTION SHALL CONFORM TO SIMILAR WORK ELSEWHERE ON THE PROJECT.

2D) WHERE DISCREPANCIES OCCUR BETWEEN PLANS, DETAILS, GENERAL NOTES AND SPECIFICATIONS:
- CONTACT THE ARCHITECT PRIOR TO PROCEEDING WITH CONSTRUCTION
- THE MORE STRINGENT REQUIREMENTS SHALL GOVERN FOR BIDDING / PRICING

3) EXISTING STRUCTURES:

3A) CONTRACT DOCUMENTS HAVE BEEN PREPARED USING AVAILABLE DRAWINGS.

3B) DURING CONSTRUCTION, THE CONTRACTOR MAY ENCOUNTER EXISTING CONDITIONS WHICH ARE NOT KNOWN OR ARE AT VARIANCE WITH PROJECT DOCUMENTATION. CONTRACTOR SHALL NOTIFY THE ARCHITECT OF ALL CONDITIONS NOT PER THE CONTRACT DOCUMENTS. EXAMPLES INCLUDE:
- SIZES OR DIMENSIONS OTHER THAN THOSE SHOWN
- DAMAGE OR DETERIORATION TO MATERIALS AND COMPONENTS
- CONDITIONS OF INSTABILITY OR LACK OF SUPPORT
- ITEMS NOTED AS EXISTING ON THE DRAWINGS BUT NOT FOUND IN THE FIELD

3C) PREPARE DIMENSIONAL DRAWINGS OF ALL DISCOVERED ITEMS.

3D) CONTRACTOR SHALL FIELD VERIFY ALL EXISTING STRUCTURAL CONDITIONS PRIOR TO SUBMITTING SHOP DRAWINGS.

3E) CONTRACTOR SHALL MAKE ALLOWANCE FOR THE RESOLUTION OF SUCH DISCOVERIES IN THE CONSTRUCTION SCHEDULE.

3F) SUBMIT A DIMENSIONED DRAWING OF ALL NEW OPENINGS THROUGH EXISTING STRUCTURE AND SECURE APPROVAL PRIOR TO CUTTING. NEW OPENING MAY BE EITHER SHOWN ON THE CONTRACT DOCUMENTS OR PROPOSED BY THE CONTRACTOR. DRAWING SHALL SHOW:
- VERTICAL & HORIZONTAL LOCATION AND SIZE OF NEW OPENING(S)
- ALL EXISTING OPENINGS IN THE VICINITY OF THE NEW OPENING(S)
- ALL EXISTING STRUCTURE (BEAMS, COLUMNS, SLABS, WALLS, ETC) IN THE VICINITY OF THE NEW OPENING(S)
- ALL REINFORCING BAR SIZES AND POSITIONS (LAYOUT LOCATION AND DEPTH) CONFLICTING WITH OR IN THE VICINITY OF THE NEW OPENING(S).

4) COORDINATION:

4A) STRUCTURAL DRAWINGS ARE NOT STAND-ALONE DOCUMENTS AND ARE INTENDED TO BE USED IN CONJUNCTION WITH CIVIL, ARCHITECTURAL, MECHANICAL, ELECTRICAL, AND DRAWINGS FROM OTHER DISCIPLINES. THE CONTRACTOR SHALL COORDINATE ALL REQUIREMENTS OF THE CONTRACT DOCUMENTS INTO SHOP DRAWINGS AND WORK.

4B) COORDINATE DIMENSIONS OF ALL OPENINGS, BLOCKOUTS, DEPRESSIONS, ETC., WITH ARCHITECTURAL DRAWINGS, DRAWINGS FROM OTHER DISCIPLINES, AND FIELD CONDITIONS PRIOR TO SHOP DRAWING SUBMITTAL.

4C) SEE ARCHITECTURAL PLANS FOR INTERIOR PARTITIONS. PARTITION FRAMING SHALL BE CONNECTED TO THE PRIMARY STRUCTURE IN SUCH A WAY SO AS TO ALLOW FOR VERTICAL LIVE LOAD DEFLECTIONS OF SPAN/240 AT ROOF FRAMING. DO NOT MAKE RIGID VERTICAL AND HORIZONTAL CONNECTIONS TO THE PRIMARY STRUCTURE IN THE PLANE OF THE PARTITION.

5) SUBMITTALS AND SUBSTITUTIONS:

5A) SUBMITTALS: REFER TO SPECIFICATIONS FOR DETAILED REQUIREMENTS.
- IF THE CONTRACTOR REQUESTS A CHANGE FROM THE STRUCTURAL DRAWINGS, IT SHALL BE APPROVED BY THE ARCHITECT AND DESIGNED BY MARTIN/MARTIN, INC. PRIOR TO SUBMITTING SHOP DRAWINGS. VARIATION SHALL BE INDICATED ON THE SHOP DRAWINGS. CONTRACTOR SHALL COMPENSATE MARTIN/MARTIN, INC. FOR MAKING THE CHANGE.
- CONSTRUCTION DOCUMENTS SHALL NOT BE REPRODUCED FOR USE IN SUBMITTALS
- ALL SHOP DRAWINGS SHALL REFERENCE THE STRUCTURAL DRAWING NUMBER AND DETAIL USED TO PREPARE THE SUBMITTAL
- SUBMIT A STATEMENT OF RESPONSIBILITY FOR CONSTRUCTION OF THE LATERAL LOAD RESISTING SYSTEM IDENTIFIED IN THE DESIGN CRITERIA IN ACCORDANCE WITH IBC 2021 SECTION 1704

5B) SUBSTITUTIONS: ARCHITECT'S APPROVAL SHALL BE SECURED FOR ALL SUBSTITUTIONS

NONCONFORMANCE: NOTIFY ARCHITECT OF CONDITIONS NOT CONSTRUCTED PER THE CONTRACT DOCUMENTS PRIOR TO PROCEEDING WITH CORRECTIVE WORK. SUBMIT PROPOSED REPAIR TO THE ARCHITECT FOR ACCEPTANCE. CONTRACTOR SHALL COMPENSATE MARTIN/MARTIN, INC. FOR DESIGNING THE REPAIR.

6) TEMPORARY CONDITIONS, CONSTRUCTION ENGINEERING, AND OSHA STANDARDS:

6A) THE STRUCTURE IS DESIGNED TO FUNCTION AS A UNIT UPON COMPLETION AND ONLY FOR LOADS ANTICIPATED DURING THE STRUCTURE'S SERVICE LIFE.

6B) THE CONTRACTOR IS RESPONSIBLE FOR FURNISHING ALL TEMPORARY BRACING AND/OR SUPPORT THAT MAY BE REQUIRED AS THE RESULT OF THE CONTRACTOR'S CONSTRUCTION METHODS AND/OR SEQUENCES. REFER TO "LATERAL LOAD RESISTING SYSTEM DESCRIPTION" IN DESIGN CRITERIA FOR ADDITIONAL INFORMATION. CONTRACTOR SHALL PROVIDE ALL REQUIRED ENGINEERING AND OTHER MEASURES TO ACHIEVE THE MEANS, METHODS, AND SEQUENCES OF WORK WHICH MAY INCLUDE, BUT IS NOT LIMITED TO:
- LAYOUT
- DESIGN FOR FORMWORK
- DESIGN OF CONCRETE MIXES
- ERECTION PROCEDURES WHICH ADDRESS STABILITY OF THE FRAME DURING CONSTRUCTION
- WELD PROCEDURES
- DESIGN OF TEMPORARY BRACING OF WALLS FOR WIND, SEISMIC, OR SOIL LOADS
- SURVEYING TO VERIFY CONSTRUCTION TOLERANCES
- EVALUATION OF TEMPORARY CONSTRUCTION LOADS ON STRUCTURE DUE TO EQUIPMENT AND MATERIALS
- STRUCTURAL ENGINEERING TO RESIST ANY OTHER LOADS NOT IDENTIFIED ON DESIGN DRAWINGS

6C) NOTHING SHOWN ON THE STRUCTURAL DRAWINGS SHALL BE CONSTRUED AS ELIMINATING THE NEED FOR THE CONTRACTOR TO COMPLY WITH ALL OSHA REQUIREMENTS. WHERE THE STRUCTURAL DRAWINGS APPEAR TO CONFLICT WITH OSHA REQUIREMENTS, THE STRUCTURAL DRAWINGS REPRESENT FINAL CONDITIONS ONLY.
- THE CONTRACTOR SHALL ADD ALL ERECTION FRAMING NECESSARY TO COMPLY WITH OSHA.
- THE CONTRACTOR SHALL ADD ALL NECESSARY BOLTS, ANCHOR BOLTS, PLATES, STIFFENER PLATES, STABILIZER PLATES, BRIDGING, BRACING, BEARING SEATS, COLUMN SPLICES, ETC., AS WELL AS CLOSURES FOR OPENINGS. IN ADDITION, FIELD WELD ANYTHING THAT MAY BE CONSIDERED A TRIP HAZARD, AFTER PROTECTIVE DECKING IS INSTALLED.

POST-INSTALLED ANCHOR NOTES

1) INSTALLATION REQUIREMENTS:

1A) ALL POST-INSTALLED ANCHORS SHALL BE INSTALLED ACCORDING TO MANUFACTURER'S PRINTED INSTALLATION INSTRUCTIONS

1B) ALL ADHESIVE ANCHORS AND ADHESIVE ANCHORED REINFORCEMENT DESIGNS ARE FOR INSTALLATION IN THE FOLLOWING CONDITIONS, UNLESS NOTED OTHERWISE. WRITTEN APPROVAL MUST BE RECEIVED FROM ENGINEER PRIOR TO INSTALLATION IN ALTERNATE CONDITIONS.
- DRY CONCRETE, UNLESS NOTED OTHERWISE.
- CONCRETE TEMPERATURE AT TIME OF INSTALLATION THROUGH CURE TIME MUST BE WITHIN THE TEMPERATURE RANGE SPECIFIED IN MANUFACTURER'S PRINTED INSTALLATION INSTRUCTION FOR ADHESIVE GEL AND CURE TIMES.
- ANCHOR HOLES TO BE HAMMER DRILLED AND CLEANED.
- CONCRETE MUST BE AT LEAST 21 DAYS OLD BEFORE INSTALLATION OF ANCHORS.
- HOLES TO BE CLEANED AND PREPARED IN STRICT ACCORDANCE WITH MANUFACTURER'S PRINTED INSTALLATION INSTRUCTIONS AND EVALUATION REPORT PRIOR TO ADHESIVE INJECTION.

1C) THE POSITION OF EXISTING REINFORCING BARS IN THE CONCRETE STRUCTURE SHALL BE LOCATED PRIOR TO INSTALLING POST INSTALLED ANCHORS OR REINFORCEMENT. EXISTING REINFORCEMENT SHALL BE LOCATED USING A SCANNER, GPR, X-RAY, CHIPPING OR OTHER MEANS. DO NOT DAMAGE OR CUT EXISTING REINFORCEMENT.

2) SUBSTITUTION REQUESTS:

3A) SUBSTITUTION REQUESTS FOR ALTERNATE PRODUCTS MUST BE APPROVED IN WRITING BY THE STRUCTURAL ENGINEER PRIOR TO USE. CONTRACTOR SHALL PROVIDE CALCULATIONS AND PRODUCT DATA DEMONSTRATING THAT THE SUBSTITUTED PRODUCT IS IN COMPLIANCE WITH THE RELEVANT BUILDING CODES, LOAD RESISTANCE, INSTALLATION CATEGORY, CREEP APPROVAL, IN-SERVICE TEMPERATURE AND INSTALLATION TEMPERATURE OF THE SPECIFIED PRODUCT.

POST-INSTALLED ANCHOR TABLE - HILTI

ANCHOR TYPE	PRODUCT	Fy (KSI)	Fu (KSI)	COMMENT
ADHESIVE (IN CONCRETE)	HILTI HIT-HY 200 V3	-	-	SUBMIT CALCULATIONS FOR SUBSTITUTIONS
ADHESIVE ANCHOR RODS	-	36 MIN	58 MIN	THREADED ROD, UNGREASED
EXPANSION ANCHORS (IN CONCRETE)	HILTI KB TZ2	-	-	SUBMIT CALCULATIONS FOR SUBSTITUTIONS
SCREW ANCHORS	HILTI KH-EZ	-	-	SUBMIT CALCULATIONS FOR SUBSTITUTIONS

JOBSITE TESTING & INSPECTION REQUIREMENTS - STEEL

Steel Testing & Inspection Definitions	
UT	Ultrasonic Testing
MT	Magnetic Particle Testing
PT	Penetration Testing
SFRS	Seismic Force Resisting System
TTT	Tension Through Thickness

Testing / Inspection Type	1	2	3	4	5
STRUCTURAL STEEL INSPECTIONS & TESTING					
Prior to Construction at AISC 341 Seismic Systems					
Understand seismic force resisting elements & joints		C			
Verify reduced beam sections contour, finish & dimensional tolerance			100%		
MT or PT for thermally cut beam copes & access holes where material ≥1 1/2"				100%	
After Construction at AISC 341 Seismic Systems					
Verify protected zones are intact and have not been compromised			100%		
Backing & tabs removed where required, and placement of weld reinforcing & contouring of fillet welds			100%		
UT of CJP welds at material ≥ 5/16" for components in seismic force resisting system				100%	
MT of Material >1 1/2" loaded in tension through-thickness in tee & corner joints					100%
MT for cracking in k-areas and at weld access holes				100%	
MT for beam to column CJP welds				25%	
Prior to Bolting					
Verify Manufacturer's Certifications	C				
Preinstallation bolt testing	C				
Verify bolt material, Ø, handling	P				
Verify bolting procedure			P		
Verify connecting element prepartion			P		
During Bolting					
Verify bolts in all holes			100%		
Verify bolts positioned as required			P		
Installation at pretensioned & slip-critical			C		
After Bolting					
Document acceptance/rejection of joints			C		
Prior to Welding					
Verify welder quals	C				
Verify ID system	P				
Verify WPS available	C				
Verify base material & weld material	P				
Verify weld procedures & weld equipment	P				
Verify joint fit-up, prep, backing, etc.		P			
Verify fit-up of HSS CJP welds		C			
Review shear stud layout requirements		C			
During Welding					
Use of qualified welders	P				
Handling of welding consumables			P		
No welding over cracked tack welds			P		
Environment conditions (wind/temp, etc)			P		
Verify WPS followed			P		
Welding techniques			P		
After Welding					
Verify welds cleaned			P		
Verify weld size, length & location			C		
Welds meet visual acceptance criteria			C		
Arc strikes			C		
Verify no cracking in k-areas and at weld access holes			C		
Repair activities			C		
Document acceptance/rejection of joints			C		
Shear stud layout, count & testing				100%	
UT CJP welds, material ≥5/16", I & II				10%	
UT CJP welds, material ≥5/16", III & IV				100%	

NU - STRUCTURAL MASONRY TESTING (LEVE...

ITEM	FREQUENCY	STANDARD	CRITERIA
- PRISM COMPRESSIVE STRENGTH (F'm)	5000 SQ FT OR FRACTION THEREOF FOR EACH TYPE OF...	ASTM C1314	TEST ONE SET OF GROUT AND ONE SET OF UNGROUTED PRISMS AT 28 DAYS. SET SHALL CONSIST ON 3 PRISMS FOR EACH TYPE OF CONSTRUCTION
- SELF-CONSOLIDATING GROUT SLUMP FLOW	EACH TRUCK	ASTM C1611	VERIFY SLUMP FLOW AND VISUAL STABILITY INDEX
- WELDING OF REINFORCEMENT, BOLTS, AND...	-	-	PER STRUCTURAL STEEL TESTING

JOBSITE TESTING & INSPECTION REQUIREMENTS - CONCRETE

Testing / Inspection Type	1	2	3	4	5
CAST-IN-PLACE CONCRETE INSPECTION & TESTING					
Before Placing Concrete					
Formwork Dimensional Layout		100%			
Reinforcing Steel Placement		100%			
Bolts & Embedments Placement		100%			
Bolts & Embedments Welding			P		
Reinforcement Welding			C		
Reinforcement Field Bending			P		
Mechanical Connectors			P		
Epoxy or Galvanized Reinforcing	100%				
During Concrete Placement					
Verify Design Mix	100%				
Concrete Mix Testing				C	
Concrete Placement Inspection			C		
Concrete Curing Inspection			P		
After Concrete Placement					
Cold Weather Curing			P		
Form Removal			P		
Floor Flatness (FF) & Levelness (FL)				P	
EXPANSION, SLEEVE & SCREW ANCHOR INSPECTION & TESTING					
Before Anchor Installation					
Verify Installation Procedure	100%				
Verify Anchor Type, Ø, & Materials		100%			
Verify Max Allowed Impact Wrench Torque			C		
During Anchor Installation					
Verify Hole Layout		P			
Grout Extents Around Masonry Anchors		P			
Verify Hole Ø, Depth, Cleaning		P			
Verify Anchor Installation			P		
After Anchor Installation					
Verify Installation of Attached Assembly			P		
Torque Test Anchors				100%	
ADHESIVE ANCHORS & REINFORCING INSPECTION & TESTING					
Before Anchor / Reinforcing Installation					
Verify Installation Procedure	100%				
Verify Anchor Type, Ø, & Materials		100%			
During Anchor / Reinforcing Installation					
Verify Hole Layout		P			
Grout Extents Around Masonry Anchors		P			
Verify Hole Ø, Depth, Cleaning		P			
Verify Anchor Installation			P		
After Anchor / Reinforcing Installation					
Verify Installation of Attached Assembly			P		
Tension Test Anchors / Reinforcing				100%	
AT ANCHORS NOTED WITH (CERT), PROVIDE CONTINUOUS INSPECTION FOR ALL ITEMS ABOVE					

JOBSITE TESTING & INSPECTION REQUIREMENTS - MASONRY

Testing / Inspection Type	1	2	3	4	5
STRUCTURAL MASONRY INSPECTIONS - LEVEL 3 (RISK CATEGORY IV)					
Compliance with Approved Submittals		P			
Cold (<40F) & Hot (>90F) Weather			P		
Observe Preparation of Grout, Mortar & Prism Specimens			C		
Prism Compressive Strength				100%	
Size & Location of Elements		P			
Proportions of Site-Mixed Mortar	P				
Placement of Masonry Units and Mortar Joint Construction			P		
Reinf, Anchorages, Connectors, Embeds	P	C			
Welding of Reinforcement			C		
Grout Space prior to Grouting			C		
Proportions of Site Mixed Grout	P				
Mix Design for Off-Site Prepared Grout	100%				
Flow of Self-Consolidating Grout				100%	
Placement of Grout			C		
Sample Panel Construction			C		

JOBSITE TESTING & INSPECTION REQUIREMENTS - GENERAL

Inspection / Testing General Notes:

1. Special inspections & testing indicated in the attached tables will be completed by the owners 3rd party testing & inspection agency.
2. Contractor shall request and coordinate testing & inspection activities with the 3rd party agency to meeting the requirements of the attached tables, notes and specifications.

TESTING & INSPECTION TYPES	
1	Material Verification & Workman Certifications
2	Site Inspection for Layout & Quantities
3	Site Inspection for Procedures & Workmanship
4	Site Testing for Material Properties & Workmanship
5	Fabrication Facility Inspection & Testing for Workmanship
TESTING & INSPECTION FREQUENCY DEFINITIONS	
C	Continuous Inspection - Full-time observation by the special inspector of the work being performed.
P	Periodic Inspection - The part-time or intermittent observation by the speicial inspector of the work being performed. 100% visual observation of all work at the completion of the work.

JOBSITE TESTING & INSPECTION REQUIREMENTS - COLD FORMED STEEL

Testing / Inspection Type	1	2	3	4	5
STRUCTURAL COLD FORMED STEEL INSPECTIONS & TESTING					
Framing					
Members & connections		P			
Bridging & blocking layout & conns		P			
No field cuts / notches through flanges		P			
No member splices except where shown		P			
Punchouts are away from bearings/conns		P			
Studs seated in tracks per details		P			
Floor / roof framing aligned with studs		P			
Cold formed steel truss layout		P			
Cold formed steel truss bridging		P			
Welded Attachments					
Procedures, materials, qualifications	100%				
During welding			P		
After welding			P		
Corrosion resistance treatment			P		
Screwed Attachments					
Type, Ø, length, spacing, edge distance		P			
Penetration		P			
Connected materials drawn together		P			
No popped screw heads/stripped threads		P			
Powder-Actuated Fasteners					
Type, Ø, length, spacing, edge distance		P			
Conformance with ICC-ES Report	P				

JOBSITE TESTING & INSPECTION REQUIREMENTS - SOILS AND FOUNDATIONS

Testing / Inspection Type	1	2	3	4	5
SOIL INSPECTION & TESTING					
Excavation Extents & Depths		P			
Subgrade Material Verification		P			
Controlled Fill Placement		C			
Bearing Material Verification				P	
Fill Material Verification		C			

JOBSITE TESTING & INSPECTION REQUIREMENTS - STEEL DECKING

Steel Deck Inspections & Testing						
Prior to Deck Placement						
Verify deck profile, grade & thickness	100%					
Document acceptance/rejection of deck	100%					
Fastener manfr installation instructions are available	100%					
Verify proper tools are available for deck installation	100%					
Verify deck fastener storage & handling			P			
During Deck Installation						
Verify deck type & layout			P			
Verify deck fastening (PAF / Screws / Welds) type, size, spacing & layout			P			
Verify fasteners are installed per manfr instructions & are fully seated				P		
Welding requirements - see welding requirements in Structural Steel						
After Deck Installation						
Verify compliance of deck & deck accessories				100%		
Verify support & sidelap connection type, size, spacing & layout		100%				
Inspect connection installation				100%		
Document acceptance/rejection of deck connections		100%				

STUDIO SW ARCHITECTS
2101 Mountain Road NW Suite B | Albuquerque NM 87104
505-843-9639 | www.studioswarch.com

© 2025 Studio Southwest Architects, Inc. Duplication or reproduction by any means without the express written consent of Studio Southwest Architects, Inc. is a violation of federal and international law. The information contained in this document is the intellectual property of Studio Southwest Architects, Inc. and all rights thereto are reserved.

CONSULTANTS

MARTIN/MARTIN CONSULTING ENGINEERS
6100 Indian School Road NE, Suite 225 | Albuquerque, NM 87110
505.242.4435 martinmartin.com

Architect

Engineer

DANIEL MULLINS NEW MEXICO 29362 08/15/2025 PROFESSIONAL ENGINEER

SFS HONDO FIRE STATION EXPANSION

645 OLD LAS VEGAS HIGHWAY SANTA FE, NM 87505

No	Date	Description
Revision Schedule		

ISSUE: 100% CONSTRUCTION DOCUMENTS
PROJECT NUMBER: 25.0149.S.01
FILE:
DRAWN BY: EM
CHECKED BY: JO
DATE: AUGUST 15, 2025

SHEET TITLE

NOTES

S-003

8/14/2025 2:45:04 PM

DESIGNERS: JIAAN YANG
LEAD REVIT TECH: ELENA MAN
DATE PRINTED: 8/14/2025 2:45:04 PM
FILE PATH: Autodesk Docs://ACCMM 525/25.0149.S.01 - HONDO FIRE STATION EXPANSION - S25.rvt

MM JOB #: 25.0149.S.01
PRINCIPAL: BENJAMIN DOWNEY
EOR: DAN MULLINS
PROJECT MANAGER: JONATHAN OLTMAN

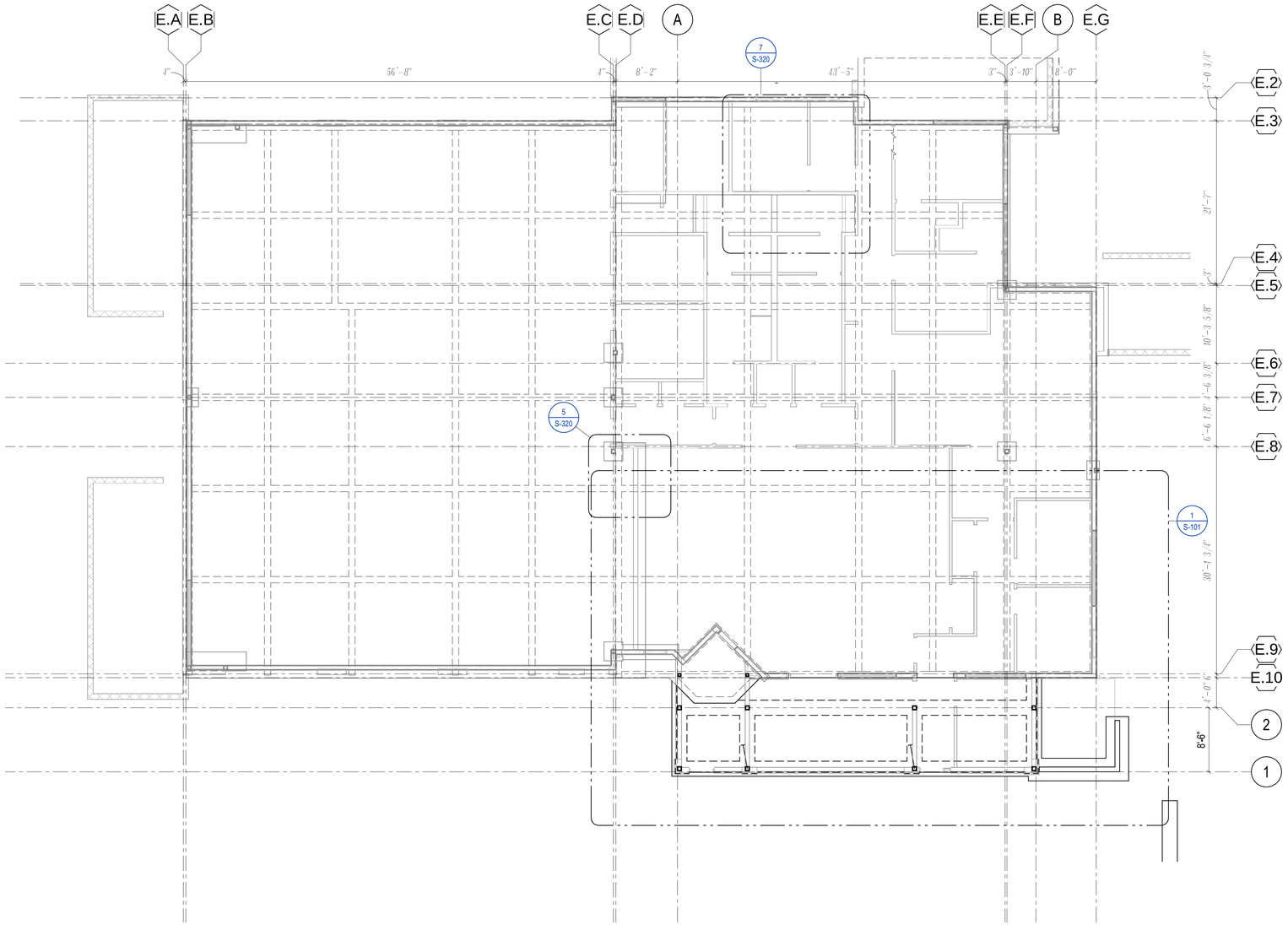

1 OVERALL PLAN

1/8" = 1'-0"

NORTH

8/14/2025 2:45:05 PM

MM JOB # 25.0149.S.01
PRINCIPAL: BENJAMIN DOWNEY
EOR: DAN MULLINS
PROJECT MANAGER: JONATHAN OLTMAN

DESIGNERS: JAAN YANG
LEAD REVIT TECH: ELENA MAN
DATE PRINTED: 8/14/2025 2:45:05 PM
FILE PATH: Autodesk Docs://ACC-MM S25\25.0149.S.01 - HONDO FIRE STATION EXPANSION - S25.rvt

STUDIO SW ARCHITECTS
2101 Mountain Road NW Suite B | Albuquerque NM 87104
505-843-9639 | www.studioswarch.com

© 2025 Studio Southwest Architects, Inc. Duplication or reproduction by any means without the express written consent of Studio Southwest Architects, Inc. is a violation of federal and international law. The information contained in this document is the intellectual property of Studio Southwest Architects, Inc. and all rights thereto are reserved.

CONSULTANTS

MARTIN/MARTIN CONSULTING ENGINEERS
6100 Indian School Road NE, Suite 225 | Albuquerque, NM 87110
505.242.4435 martinmartin.com

Architect

Engineer

DANIEL MULLINS
NEW MEXICO
29362
08/15/2025
PROFESSIONAL ENGINEER

SFS HONDO FIRE STATION EXPANSION

645 OLD LAS VEGAS HIGHWAY SANTA FE, NM 87505

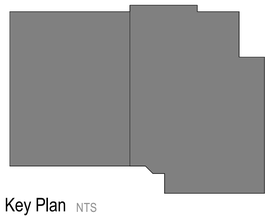

Key Plan NTS

No	Date	Description
Revision Schedule		

ISSUE:	100% CONSTRUCTION DOCUMENTS
PROJECT NUMBER:	25.0149.S.01
FILE:	
DRAWN BY:	EM
CHECKED BY:	JO
DATE:	AUGUST 15, 2025

SHEET TITLE

OVERALL FOUNDATION PLAN

S-100

8/14/2025 2:45:07 PM

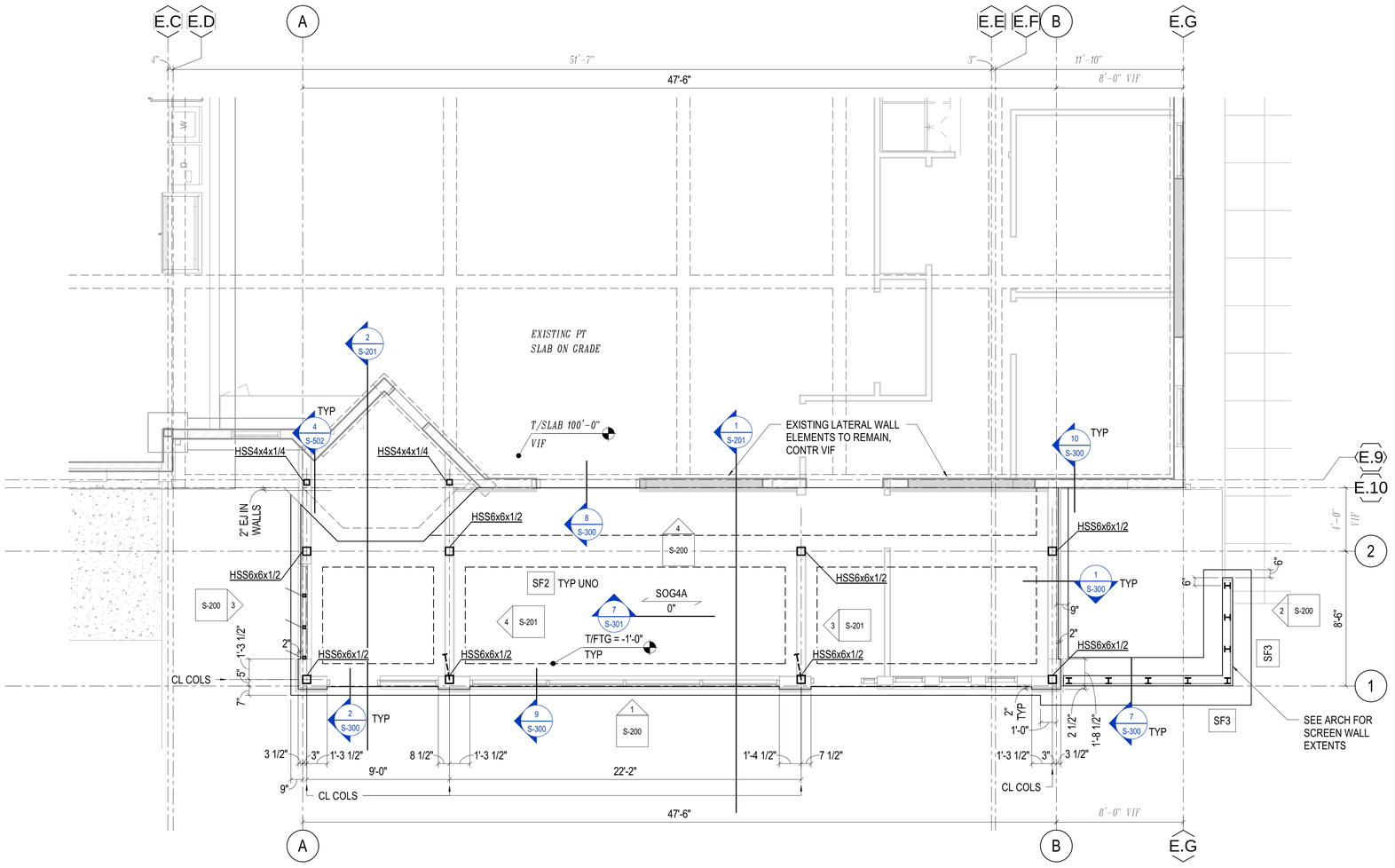

1 LEVEL 1 ENLARGED FOUNDATION PLAN

1/4" = 1'-0"

NORTH

FOUNDATION NOTES

1) GENERAL:
1A) SEE S0 SERIES SHEETS FOR GENERAL NOTES, SYMBOLS AND ABBREVIATIONS.
1B) USGS ELEVATION 7147.02' = PROJECT ELEVATION 0'-0". VERIFY IN FIELD AND WITH CIVIL AND ARCHITECTURAL DRAWINGS PRIOR TO CONSTRUCTION.
1C) SEE S3 SERIES SHEETS FOR TYPICAL CONCRETE DETAILS.

2) SLAB-ON-GRADE:
2A) SEE DETAIL 7/S-301 FOR TYPICAL SLAB-ON-GRADE DETAIL.
2B) SEE DETAIL 4/S-301 FOR TYPICAL SLAB-ON-GRADE LAYOUT/INFORMATION.
2C) SEE ARCH AND MECH DRAWINGS FOR SLAB SLOPES, DEPRESSIONS, FILL, PADS, AND CURBS NOT SHOWN ON THE STRUCTURAL DRAWINGS.
2D) SEE ARCH DRAWINGS FOR VAPOR RETARDER LOCATIONS. INSTALL VAPOR RETARDER DIRECTLY UNDER SLAB PER RECOMMENDATIONS OF PCA AND ACI 302.1R-04. TAKE PRECAUTIONS TO MINIMIZE SLAB CURLING. GRIND SLAB TO ACHIEVE SPECIFIED FLOOR FLATNESS AND LEVELNESS VALUES.
2E) SLABS-ON-GRADE WITH EXTERIOR EXPOSURE, SHALL BE REINFORCED WITH EPOXY COATED (EC) REINFORCING.
2F) SEE "CONCRETE NOTES " FOR JOINTING REQUIREMENTS AT SLAB-ON-GRADE.

3) MASONRY WALLS:
3A) STRUCTURAL MASONRY WALLS:
- SEE 7/S-300 FOR MASONRY WALL DETAIL AT SCREEN WALL
3B) SEE ARCHITECTURAL DRAWINGS FOR DIMENSIONS OF ALL MASONRY WALLS.

4) EXISTING STRUCTURE:
4A) SEE ARCHITECTURAL DRAWINGS FOR RELATIONSHIP BETWEEN NEW AND EXISTING BUILDING GRID SYSTEMS. CONTRACTOR TO VERIFY EXISTING BUILDING LOCATION RELATIVE TO NEW CONSTRUCTION IN THE FIELD PRIOR TO PRODUCTION OF ANY SHOP DRAWINGS FOR NEW CONSTRUCTION
4B) CONTRACT DOCUMENTS HAVE BEEN PREPARED USING AVAILABLE DRAWINGS. VERIFY ALL DIMENSIONS RELATED TO EXISTING STRUCTURE PRIOR TO SHOP DRAWING PRODUCTION. PROVIDE PROPOSED RESOLUTIONS OF ANY DISCREPANCIES TO THE DESIGN TEAM FOR REVIEW
4C) LOCATE ALL REINFORCEMENT PRIOR TO DRILLING OR CORING INTO EXISTING CONCRETE USING NON-DESTRUCTIVE METHODS (GPR OR X-RAY). DO NOT DAMAGE EXISTING REINFORCING.

STUDIO SW ARCHITECTS
2101 Mountain Road NW Suite B | Albuquerque NM 87104
505-843-9639 | www.studioswarch.com

© 2025 Studio Southwest Architects, Inc. Duplication or reproduction by any means without the express written consent of Studio Southwest Architects, Inc. is a violation of federal and international law. The information contained in this document is the intellectual property of Studio Southwest Architects, Inc. and all rights thereto are reserved.

CONSULTANTS

MARTIN/MARTIN CONSULTING ENGINEERS
6100 Indian School Road NE, Suite 225 | Albuquerque, NM 87110
505.242.4435 martinmartin.com

Architect

Engineer

DANIEL MULLINS NEW MEXICO 29362 08/15/2025 PROFESSIONAL ENGINEER

SFS HONDO FIRE STATION EXPANSION

645 OLD LAS VEGAS HIGHWAY SANTA FE, NM 87505

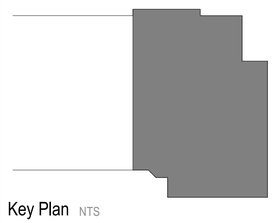

Key Plan NTS

No	Date	Description
Revision Schedule		

ISSUE:	100% CONSTRUCTION DOCUMENTS
PROJECT NUMBER:	25.0149.S.01
FILE:	
DRAWN BY:	EM
CHECKED BY:	JO
DATE:	AUGUST 15, 2025

SHEET TITLE

LEVEL 1 ENLARGED PLAN

S-101

MM JOB # 25.0149.S.01
PRINCIPAL: BENJAMIN DOWNEY
EOR: DAN MULLINS
PROJECT MANAGER: JONATHAN OLTMAN
DESIGNERS: JIAAN YANG
LEAD REVIT TECH: ELENA MAN
DATE PRINTED: 8/14/2025 2:45:07 PM
FILE PATH: Autodesk Docs://AC24#R S2025.0149.S.01 - HONDO FIRE STATION EXPANSION - S25.rvt

8/14/2025 2:45:08 PM

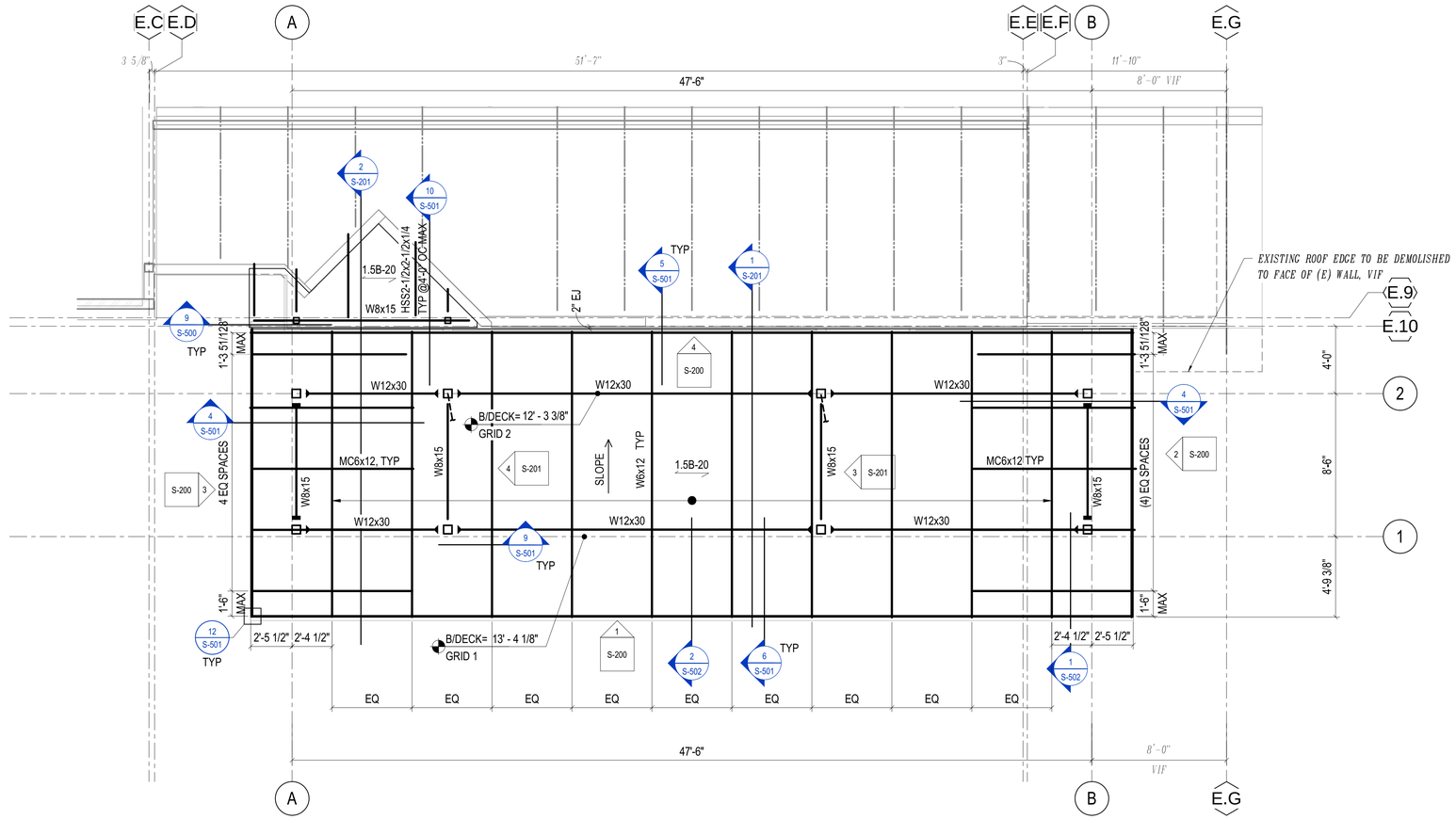

1 ROOF ENLARGED FRAMING PLAN

1/4" = 1'-0"

NORTH

ROOF NOTES

1) GENERAL:
1A) SEE S0 SERIES SHEETS FOR GENERAL NOTES, SYMBOLS AND ABBREVIATIONS.
1B) SEE S5 SERIES SHEETS FOR TYPICAL STEEL DETAILS.

2) STEEL BEAMS:
2A) STEEL BEAMS SHALL BE EQUALLY SPACED BETWEEN GRIDLINES/COLUMNS/GIRDERS UNLESS DIMENSIONED OTHERWISE.
2B) TOP OF STEEL BEAMS SHALL EQUAL BOTTOM OF METAL DECK ELEVATION, SEE PLANS AND DETAILS FOR ADDITIONAL INFORMATION.
- SEE PLAN FOR BOTTOM OF DECK ELEVATION

3) METAL DECK:
3A) SEE 8/S-500 FOR TYPICAL METAL DECK AND CONNECTION REQUIREMENTS.

4) EXISTING STRUCTURE:
4A) SEE ARCHITECTURAL DRAWINGS FOR RELATIONSHIP BETWEEN NEW AND EXISTING BUILDING GRID SYSTEMS. CONTRACTOR TO VERIFY EXISTING BUILDING LOCATION RELATIVE TO NEW CONSTRUCTION IN THE FIELD PRIOR TO PRODUCTION OF ANY SHOP DRAWINGS FOR NEW CONSTRUCTION
4B) CONTRACT DOCUMENTS HAVE BEEN PREPARED USING AVAILABLE DRAWINGS. VERIFY ALL DIMENSIONS RELATED TO EXISTING STRUCTURE PRIOR TO SHOP DRAWING PRODUCTION. PROVIDE PROPOSED RESOLUTIONS OF ANY DISCREPANCIES TO THE DESIGN TEAM FOR REVIEW
4C) LOCATE ALL REINFORCEMENT PRIOR TO DRILLING OR CORING INTO EXISTING CONCRETE USING NON-DESTRUCTIVE METHODS (GPR OR X-RAY). DO NOT DAMAGE EXISTING REINFORCING.

STUDIO SW ARCHITECTS
2101 Mountain Road NW Suite B | Albuquerque NM 87104
505-843-9639 | www.studioswarch.com

© 2025 Studio Southwest Architects, Inc. Duplication or reproduction by any means without the express written consent of Studio Southwest Architects, Inc. is a violation of federal and international law. The information contained in this document is the intellectual property of Studio Southwest Architects, Inc. and all rights thereto are reserved.

CONSULTANTS

MARTIN/MARTIN CONSULTING ENGINEERS
6100 Indian School Road NE, Suite 225 | Albuquerque, NM 87110
505.242.4435 martinmartin.com

Architect

Engineer

DANIEL MULLINS NEW MEXICO 29362 08/15/2025 PROFESSIONAL ENGINEER

SFS HONDO FIRE STATION EXPANSION

645 OLD LAS VEGAS HIGHWAY SANTA FE, NM 87505

Key Plan NTS

No	Date	Description
Revision Schedule		

ISSUE:	100% CONSTRUCTION DOCUMENTS
PROJECT NUMBER:	25.0149.S.01
FILE:	
DRAWN BY:	EM
CHECKED BY:	JO
DATE:	AUGUST 15, 2025

SHEET TITLE

ROOF ENLARGED PLAN

S-102

MM JOB # 25.0149.S.01
PRINCIPAL: BENJAMIN DOWNEY
EOR: DAN MULLINS
PROJECT MANAGER: JONATHAN OLTMAN
DESIGNERS: JIAAN YANG
LEAD REVIT TECH: ELENA MAN
DATE PRINTED: 8/14/2025 2:45:08 PM
FILE PATH: Autodesk Docs://ACI-24/M S25/25.0149.S.01 - HONDO FIRE STATION EXPANSION - S25.rvt

8/14/2025 2:45:12 PM

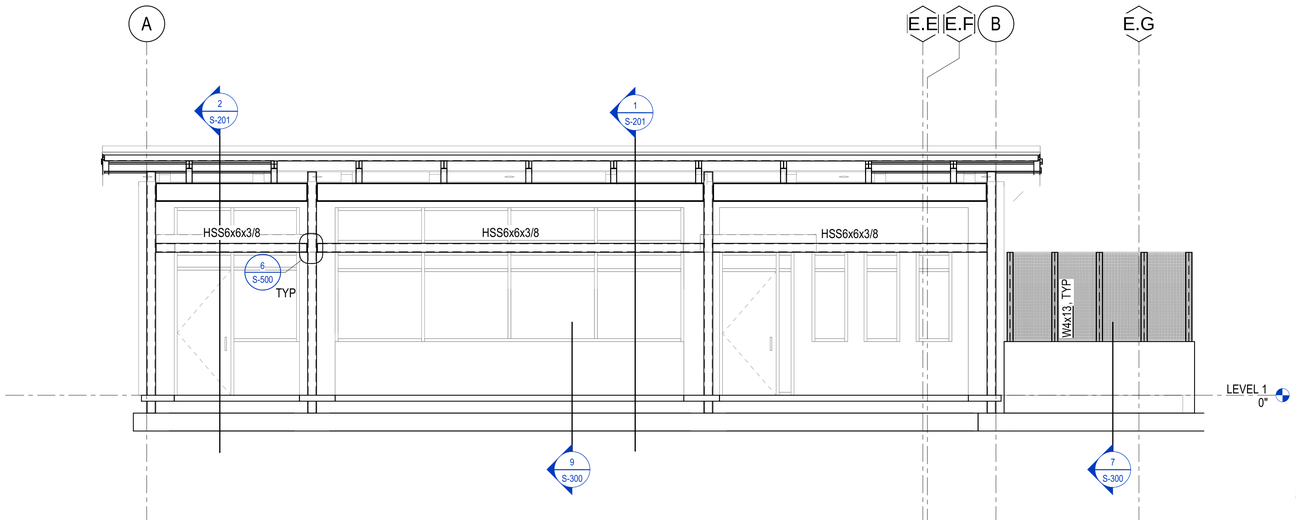

1 ADDITION SOUTH ELEVATION

1/4" = 1'-0"

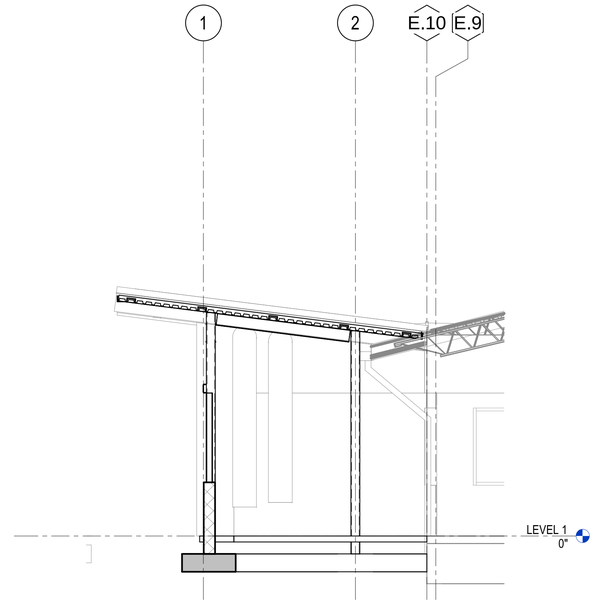

2 ADDITION EAST ELEVATION

1/4" = 1'-0"

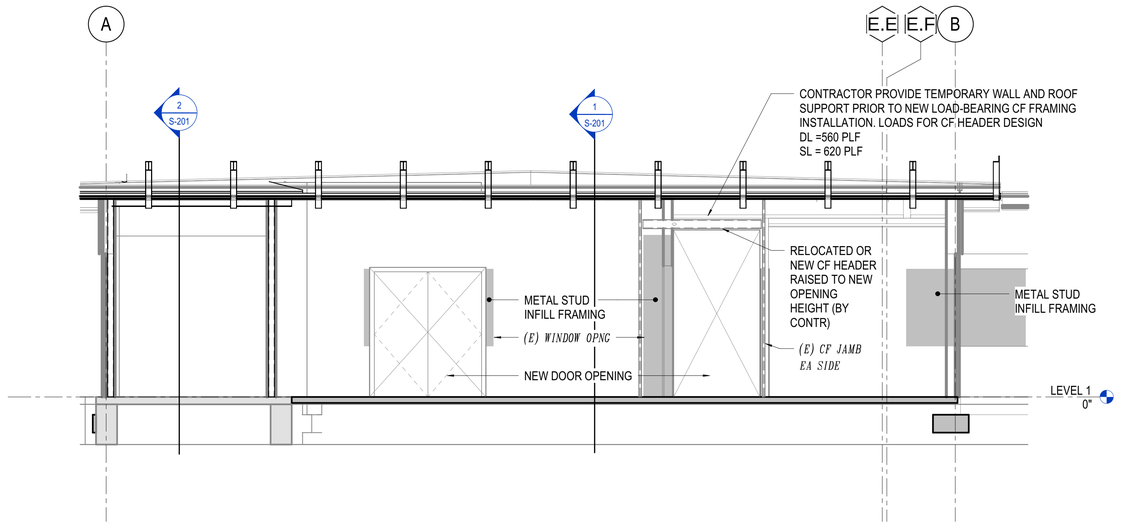

4 EXISTING BUILDING WALL ELEVATION AT ADDITION

1/4" = 1'-0"

NOTES:

1. RELOCATED LOAD-BEARING CFMF AND INFILL CFMF DESIGN TO BE COMPLETED BY THE CONTRACTOR

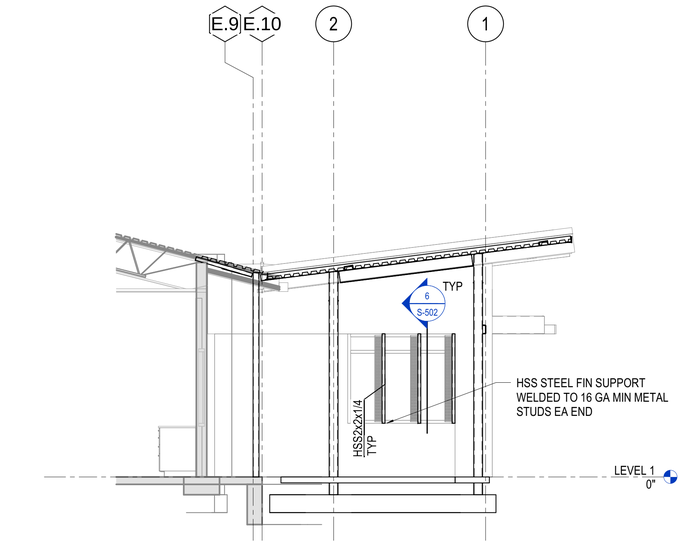

3 ADDITION WEST ELEVATION

1/4" = 1'-0"

STUDIO SW ARCHITECTS
2101 Mountain Road NW Suite B | Albuquerque NM 87104
505-843-9639 | www.studioswarch.com

© 2025 Studio Southwest Architects, Inc. Duplication or reproduction by any means without the express written consent of Studio Southwest Architects, Inc. is a violation of federal and international law. The information contained in this document is the intellectual property of Studio Southwest Architects, Inc. and all rights thereto are reserved.

CONSULTANTS

MARTIN/MARTIN CONSULTING ENGINEERS
6100 Indian School Road NE, Suite 225 | Albuquerque, NM 87110
505.242.4435 martinmartin.com

Architect

Engineer

DANIEL MULLINS NEW MEXICO 29362 08/15/2025 PROFESSIONAL ENGINEER

SFS HONDO FIRE STATION EXPANSION

645 OLD LAS VEGAS HIGHWAY SANTA FE, NM 87505

No	Date	Description
Revision Schedule		

ISSUE:	100% CONSTRUCTION DOCUMENTS
PROJECT NUMBER:	25.0149.S.01
FILE:	
DRAWN BY:	EM
CHECKED BY:	JO
DATE:	AUGUST 15, 2025

SHEET TITLE

ELEVATIONS

S-200

DESIGNERS: JAAN YANG
LEAD REVIT TECH: ELENA MAN
DATE PRINTED: 8/14/2025 2:45:12 PM
FILE PATH: Autodesk Docs://ACC-MM SDS/25.0149.S.01 - HONDO FIRE STATION EXPANSION - S25.rvt
MM JOB #: 25.0149.S.01
PRINCIPAL: BENJAMIN DOWNEY
EOR: DAN MULLINS
PROJECT MANAGER: JONATHAN OLTMAN

8/14/2025 2:45:13 PM

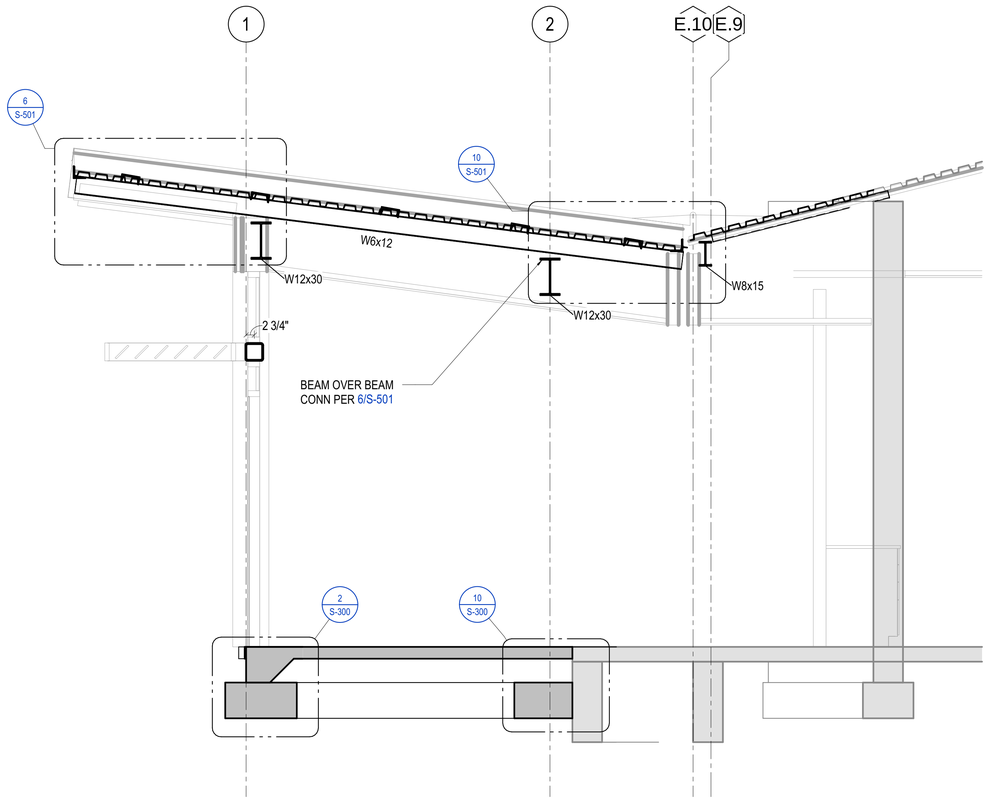

2 STRUCTURAL SECTION AT VESTIBULE ADDITION

1/2" = 1'-0"

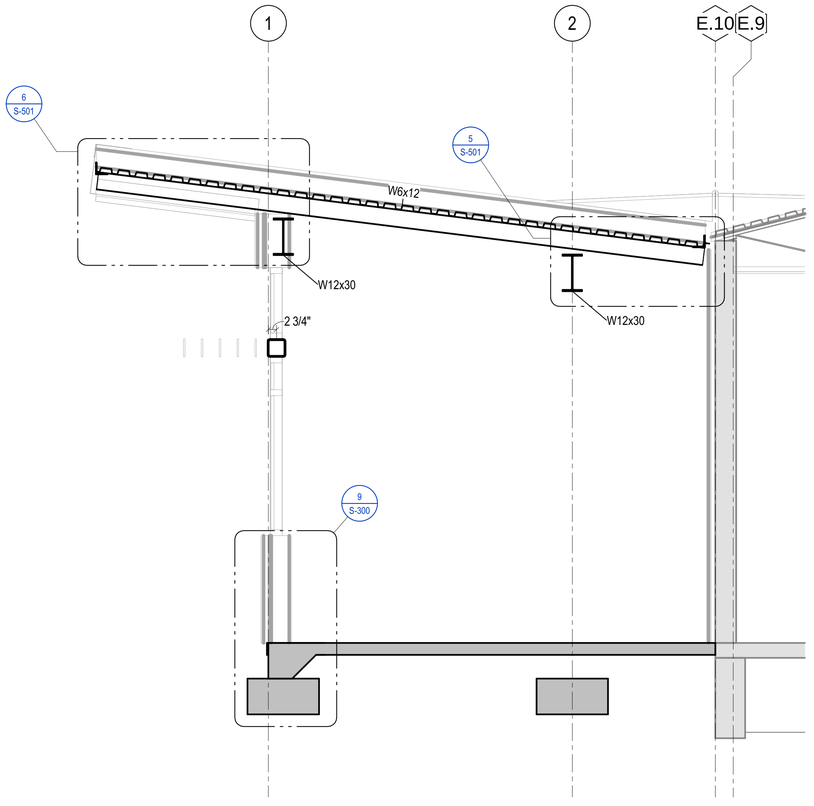

1 TYPICAL STRUCTURAL SECTION AT ADDITION

1/2" = 1'-0"

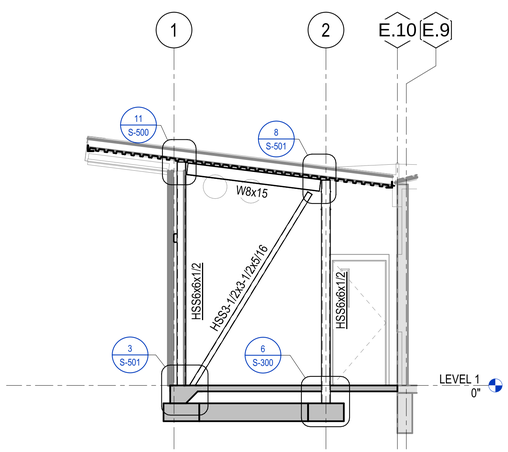

3 BRACED FRAME ELEVATION 1

1/4" = 1'-0"

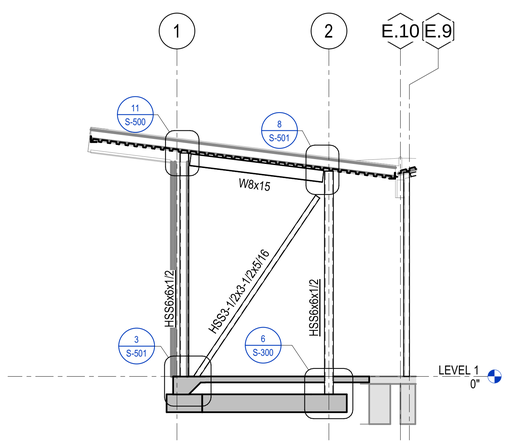

4 BRACED FRAME ELEVATION 2

1/4" = 1'-0"

DESIGNERS: JAAN YANG
LEAD REVIT TECH: ELENA MAN
DATE PRINTED: 8/14/2025 2:45:13 PM
FILE PATH: Autodesk Docs://ACAMI S25/25.0149.S.01 - HONDO FIRE STATION EXPANSION - S25.rvt

MM JOB #: 25.0149.S.01
PRINCIPAL: BENJAMIN DOWNEY
EOR: DAN MULLINS
PROJECT MANAGER: JONATHAN OLTMAN

STUDIO SW ARCHITECTS
2101 Mountain Road NW Suite B | Albuquerque NM 87104
505-843-9639 | www.studioswarch.com

© 2025 Studio Southwest Architects, Inc. Duplication or reproduction by any means without the express written consent of Studio Southwest Architects, Inc. is a violation of federal and international law. The information contained in this document is the intellectual property of Studio Southwest Architects, Inc. and all rights thereto are reserved.

CONSULTANTS

MARTIN/MARTIN CONSULTING ENGINEERS
6100 Indian School Road NE, Suite 225 | Albuquerque, NM 87110
505.242.4435 martinmartin.com

Architect

Engineer

DANIEL MULLINS NEW MEXICO 29362 08/15/2025 PROFESSIONAL ENGINEER

SFS HONDO FIRE STATION EXPANSION

645 OLD LAS VEGAS HIGHWAY SANTA FE, NM 87505

No	Date	Description
Revision Schedule		

ISSUE:	100% CONSTRUCTION DOCUMENTS
PROJECT NUMBER:	25.0149.S.01
FILE:	
DRAWN BY:	EM
CHECKED BY:	JO
DATE:	AUGUST 15, 2025

SHEET TITLE

SECTIONS

S-201

8/14/2025 2:45:13 PM

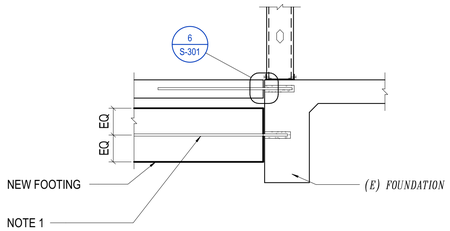

NOTES:
1. #4@12" (3 MIN), ADHESIVE ANCHOR TO EXISTING FOUNDATION. LOCATE EXISTING REINFORCEMENT, ANCHORS AND TENDONS, AND DO NOT DAMAGE. FOR MORE INFORMATION SEE 6/S-301

10 3/4" = 1'-0" NEW FOOTING CONNECTION TO EXISTING

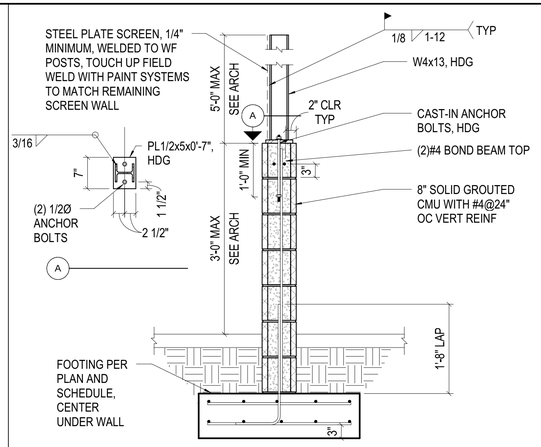

7 3/4" = 1'-0" EXTERIOR MASONRY SCREEN WALL

8 3/4" = 1'-0" NEW SLAB AT (E) FOUNDATION

STRIP FOOTING SCHEDULE				
MARK	FOOTING SIZE W x T	LONG REINF	TRANS REINF	REMARKS
SF2	2'-0"x 1'-0"	(3) #4		TOP & BOT
SF3	3'-0"x 1'-0"	(5) #4	#4@12" OC	TOP & BOT

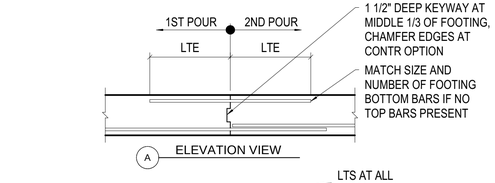

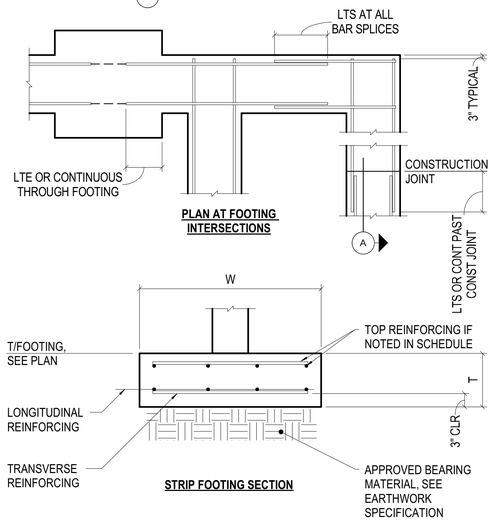

5 NO SCALE TYP STRIP FOOTING

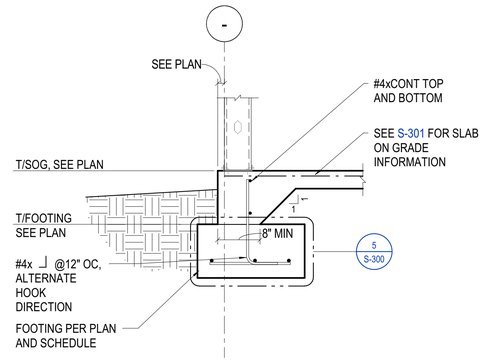

1 3/4" = 1'-0" EXTERIOR SLAB POUR DOWN WITH FOOTING

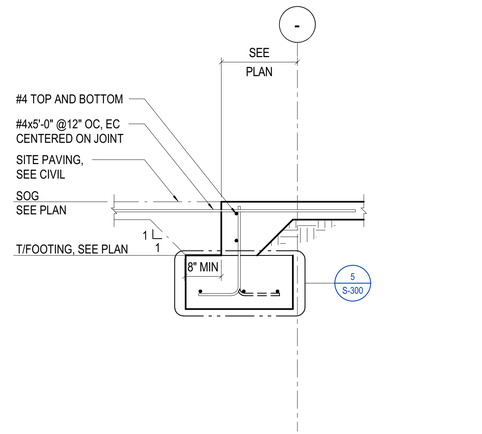

NOTES:
1. FOR ADDITIONAL REQUIREMENTS, SEE 1/S-300

2 3/4" = 1'-0" SLAB POUR OVER AT EXTERIOR THRESHOLD

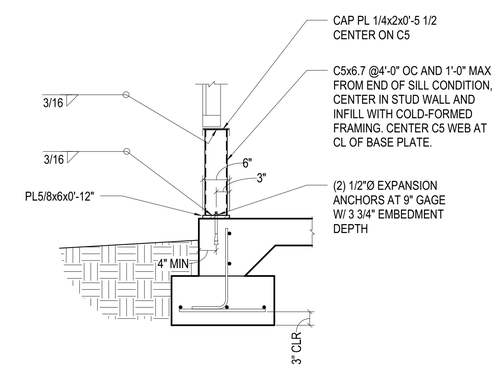

NOTES:
1. FOR ADDITIONAL REQUIREMENTS, SEE 1/S-300

9 NO SCALE EXTERIOR SLAB POUR DOWN WITH FOOTING - SILL CONDITION

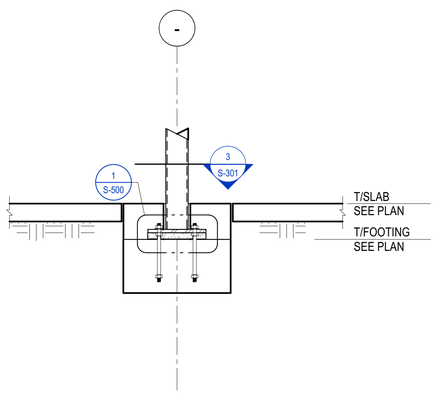

6 3/4" = 1'-0" INTERIOR COLUMN AT SPREAD FOOTING

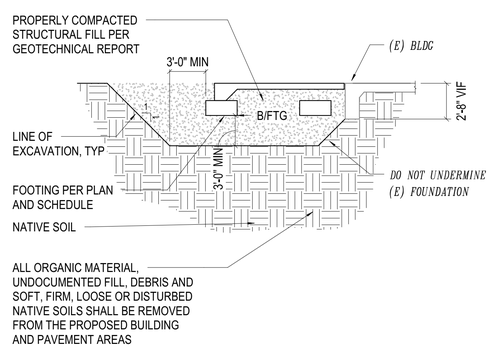

3 NO SCALE TYPICAL EXCAVATION SECTION

STUDIO SW ARCHITECTS
2101 Mountain Road NW Suite B | Albuquerque NM 87104
505-843-9639 | www.studioswarch.com

© 2025 Studio Southwest Architects, Inc. Duplication or reproduction by any means without the express written consent of Studio Southwest Architects, Inc. is a violation of federal and international law. The information contained in this document is the intellectual property of Studio Southwest Architects, Inc. and all rights thereto are reserved.

CONSULTANTS

MARTIN/MARTIN CONSULTING ENGINEERS
6100 Indian School Road NE, Suite 225 | Albuquerque, NM 87110
505.242.4435 martinmartin.com

Architect

Engineer

DANIEL MULLINS NEW MEXICO 29362 08/15/2025 PROFESSIONAL ENGINEER

SFS HONDO FIRE STATION EXPANSION

645 OLD LAS VEGAS HIGHWAY SANTA FE, NM 87505

No	Date	Description
Revision Schedule		

ISSUE:	100% CONSTRUCTION DOCUMENTS
PROJECT NUMBER:	25.0149.S.01
FILE:	
DRAWN BY:	EM
CHECKED BY:	JO
DATE:	AUGUST 15, 2025

SHEET TITLE

FOUNDATION DETAILS

S-300

MM JOB # 25.0149.S.01
PRINCIPAL: BENJAMIN DOWNEY
EOR: DAN MULLINS
PROJECT MANAGER: JONATHAN OLTMAN

DESIGNERS: JAAN YANG
LEAD REVIT TECH: ELENA MAN
DATE PRINTED: 8/14/2025 2:45:13 PM
FILE PATH: Autodesk Docs://ACC-MM S2S/25.0149.S.01 - HONDO FIRE STATION EXPANSION - S25.rvt

8/14/2025 2:45:14 PM

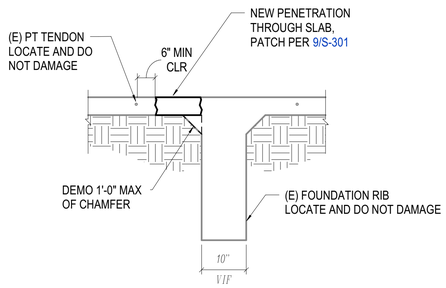

10 NO SCALE SLAB DEMO AT PT RIB

SLAB ON GRADE SCHEDULE				
TYPE	THICKNESS, T	REINF	BAR POSITION, P	REMARKS
SOG4A	4"	6x6-W2.9xW2.9 WWR	1 1/2"	

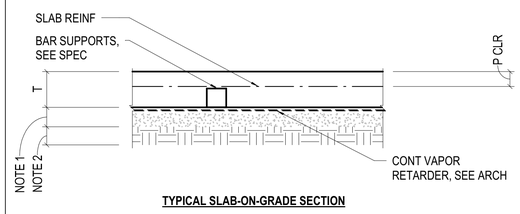

TYPICAL SLAB-ON-GRADE SECTION

NOTES:
1. GRANULAR COURSE: 4" MIN COMPACTED GRANULAR FILL, SEE GEOTECHNICAL REPORT
2. PREPARED/COMPACTED SUBGRADE, SEE GEOTECHNICAL REPORT

7 NO SCALE TYP SOG SCHEDULE

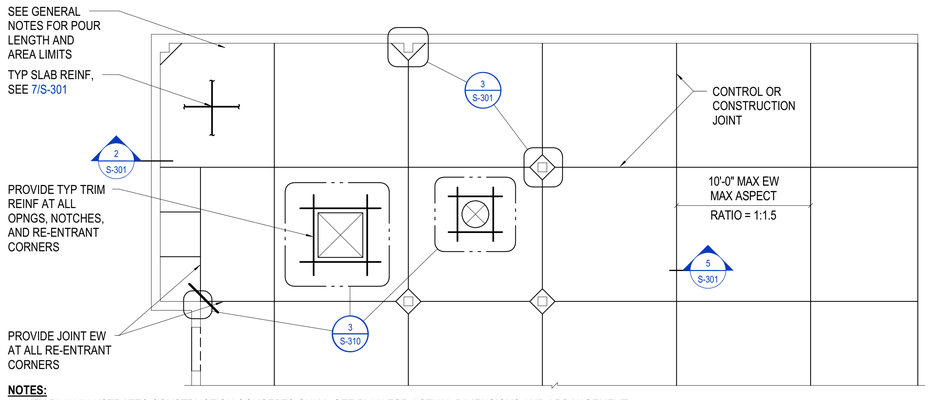

NOTES:
1. KEY PLAN ILLUSTRATES CONSTRUCTION CONCEPTS ONLY. SEE PLAN FOR ACTUAL DIMENSIONS AND ARRANGEMENT
2. PROVIDE ADDITIONAL CONTROL JOINTS AT ABRUPT CHANGES IN THICKNESS AND LOCATIONS PRONE TO CRACKING, COORD LOCS WITH FLOOR FINISHES AND INTERIOR WALLS

4 NO SCALE TYP SOG KEY PLAN

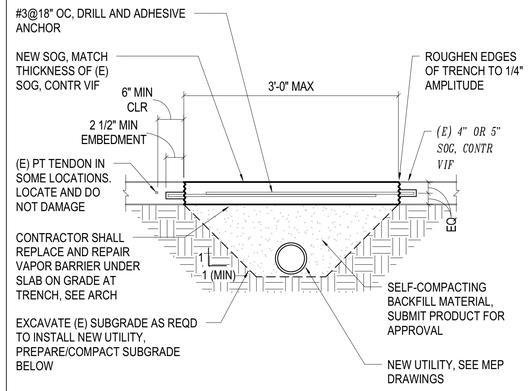

8 3/4" = 1'-0" TYP TRENCH IN (E) SOG

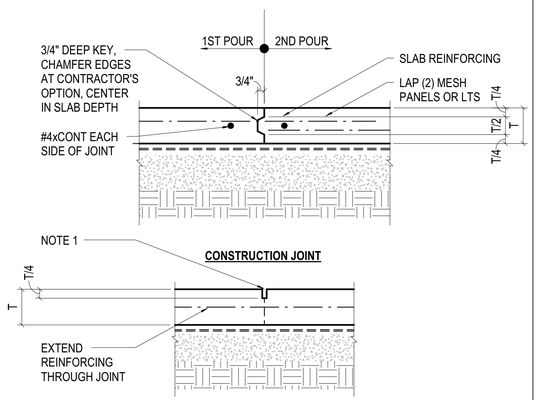

NOTES:
1. PROVIDE TOOLED JOINT OR SAW CUT AS SOON AS THE CONCRETE HAS HARDENED SUFFICIENTLY TO PERMIT CUTTING WITHOUT CHIPPING, SPALLING, OR TEARING (BUT NOT MORE THAN 12 HOURS AFTER CASTING)

5 1 1/2" = 1'-0" SLAB-ON-GRADE JOINTS, NON-INDUSTRIAL

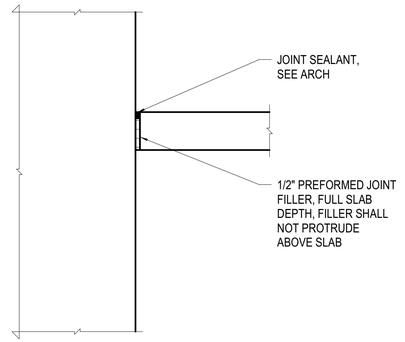

2 1 1/2" = 1'-0" TYP SOG ISOLATION JOINT

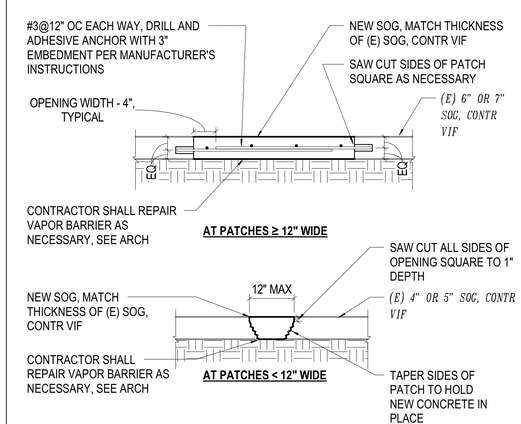

9 NO SCALE TYP (E) SOG PATCHING

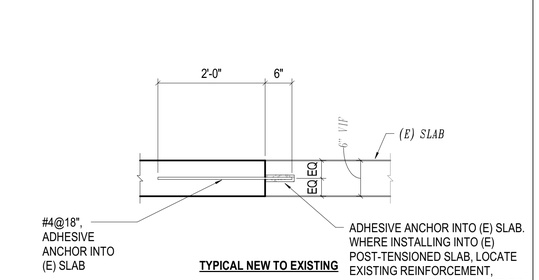

NOTES:
1. TYPICAL SLAB REINFORCING NOT SHOWN

6 3/4" = 1'-0" SOG DOWEL TO EXISTING

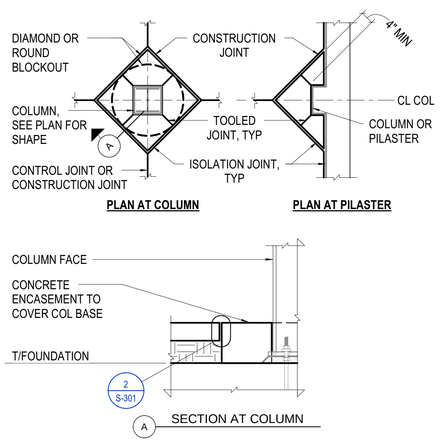

3 3/4" = 1'-0" SOG BLOCKOUT AT COLUMN/PILASTER

STUDIO SW ARCHITECTS
2101 Mountain Road NW Suite B | Albuquerque NM 87104
505-843-9639 | www.studioswarch.com

© 2025 Studio Southwest Architects, Inc. Duplication or reproduction by any means without the express written consent of Studio Southwest Architects, Inc. is a violation of federal and international law. The information contained in this document is the intellectual property of Studio Southwest Architects, Inc. and all rights thereto are reserved.

CONSULTANTS

MARTIN/MARTIN CONSULTING ENGINEERS
6100 Indian School Road NE, Suite 225 | Albuquerque, NM 87110
505.242.4435 martinmartin.com

Architect

Engineer

DANIEL MULLINS NEW MEXICO 29362 08/15/2025 PROFESSIONAL ENGINEER

No	Date	Description
Revision Schedule		

ISSUE:	100% CONSTRUCTION DOCUMENTS
PROJECT NUMBER:	25.0149.S.01
FILE:	
DRAWN BY:	EM
CHECKED BY:	JO
DATE:	AUGUST 15, 2025

SFS HONDO FIRE STATION EXPANSION

645 OLD LAS VEGAS HIGHWAY SANTA FE, NM 87505

SHEET TITLE

FOUNDATION DETAILS

S-301

MM JOB #: 25.0149.S.01
PRINCIPAL: BENJAMIN DOWNEY
EOR: DAN MULLINS
PROJECT MANAGER: JONATHAN OLTMAN
DESIGNERS: JIAAN YANG
LEAD REVIT TECH: ELENA MAN
DATE PRINTED: 8/14/2025 2:45:14 PM
FILE PATH: Autodesk Docs://ACC-MM SS/25.0149.S.01 - HONDO FIRE STATION EXPANSION - S25.rvt

8/14/2025 2:45:14 PM

REBAR COVER TABLE

CASE	COVER (IN)
CONCRETE PLACED AGAINST EARTH	3
CONCRETE PLACED IN FORMS, EXPOSED TO WEATHER OR EARTH	2
SLABS OR WALLS NOT EXPOSED TO EARTH OR WEATHER	1

STANDARD BENDS

D1	
#3 - #8	6d
#9 - #11	8d

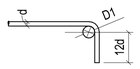

90° HOOK

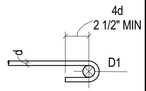

180° HOOK

STIRRUP/TIE BENDS

D2	
#3 - #5	4d
#6 - #8	6d

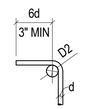

90° HOOK (#3-#5)

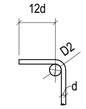

90° HOOK (#6-#8)

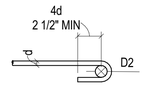

180° HOOK (#3-#8)

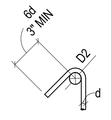

135° HOOK (#3-#8)



MAX OFFSET BEND

NOTES:
1. ALL BENDS SHALL BE MADE COLD
2. #14 & #18 BARS SHALL BE BEND TESTED & LAB APPROVED PRIOR TO BENDING

TYPICAL REINFORCING BENDS

LAP SPLICE & DEVELOPMENT LENGTHS (INCHES)
F'c=3,000 PSI, Fy=60,000 PSI

CLEAR COVER					1"	1.5"	2"+	1"	1.5"	2"+	1"	1.5"	2"+
SPACING	s≥ 6db	s< 6db	LCE	LCS	LTE			LTE TOP & LTS			LTS TOP		
BAR SIZE	LDH												
#3	6	6	9	12	12			13			17		
#4	6	10	11	15	14			18			23		
#5	8	13	14	19	20	17		26	22		34	28	
#6	11	17	17	23	27	20		35	26		46	34	
#7	14	21	20	27	44	33	29	57	43	38	74	55	49
#8	16	26	22	30	55	42	33	72	54	43	93	70	56
#9	20	31	25	34	67	51	41	87	66	54	113	86	69
#10	23	37	28	39	82	63	51	106	81	66	137	105	85
#11	27	43	31	43	96	75	61	125	97	79	162	126	103

LAP SPLICE & DEVELOPMENT LENGTHS (INCHES)
F'c=5,000 PSI, Fy=60,000 PSI

CLEAR COVER					1"	1.5"	2"+	1"	1.5"	2"+	1"	1.5"	2"+
SPACING	s≥ 6db	s< 6db	LCE	LCS	LTE			LTE TOP & LTS			LTS TOP		
BAR SIZE	LDH												
#3	6	6	8	12	12			12			13		
#4	6	9	9	15	12			14			18		
#5	8	12	12	19	16	13		20	17		26	22	
#6	10	15	14	23	21	16		28	20		36	26	
#7	12	19	16	27	34	26	23	45	33	29	58	43	38
#8	15	24	18	30	43	32	26	56	42	34	72	54	44
#9	18	28	21	34	52	40	32	68	52	42	88	67	54
#10	21	33	23	39	63	49	39	82	63	51	107	82	66
#11	25	39	26	43	75	58	47	97	75	61	126	97	80

GENERAL NOTES:
1. LENGTHS SPECIFICALLY DETAILED ON DRAWINGS SHALL GOVERN IN LIEU OF LAP LENGTHS SCHEDULED
2. ABBREVIATIONS:
   A. 'LCE' = COMPRESSION EMBEDMENT LENGTH
   B. 'LCS' = COMPRESSION LAP SPLICE LENGTH
   C. 'LDH' = HOOK DEVELOPMENT LENGTH
   D. 'LTE' = TENSION EMBEDMENT LENGTH
   E. 'LTS' = TENSION LAP SPLICE LENGTH
3. 'TOP' BARS ARE HORIZONTAL BARS PLACED SUCH THAT MORE THAN 12 IN OF FRESH CONCRETE IS CAST BELOW THE BAR
4. CLEAR COVER IS DEFINED FROM THE NEAREST FACE OF CONCRETE TO THE FACE OF BAR BEING DEVELOPED OR SPLICED
5. UNLESS NOTED OTHERWISE, ALL HOOK BARS SHALL EXTEND TO THE FAR FACE LESS 2" COVER
6. IF A NOTE OR DETAIL CALLS FOR A BAR TO BE EMBEDDED Ld (DEVELOPMENT LENGTH) INTO CONCRETE, THIS SHALL CORRESPOND TO A 'LTE' LENGTH
7. IF A NOTE OR DETAIL REQUIRES A BAR TO HAVE A DEVELOPMENT OR LAP LENGTH BUT INSUFFICIENT DIMENSION IS AVAILABLE FOR THE LENGTH SCHEDULED, EXTEND BAR TO FAR FACE OF CONCRETE LESS 2" COVER AND HOOK
8. CLEAR SPACING BETWEEN VERTICAL BARS IN COLUMNS, PILASTERS, AND WALL BOUNDRY ELEMENTS SHALL NOT BE LESS THAN THE LESSER OF 1.5 INCHES, 1.5xBAR DIAMETER, AND 1.33xAGGREGATE SIZE

ADJUSTMENTS TO GIVEN LENGTHS:
1. IF REINFORCING IS SPECIFIED AS EPOXY COATED, INCREASE SCHEDULED LENGTHS BY 50%
2. IF LIGHTWEIGHT AGGREGATE IS SPECIFIED, INCREASE SCHEDULED LAP BY LENGTHS 33%
3. SCHEDULED LENGTHS ASSUME:
   A. CLEAR COVER IS AS INDICATED IN SCHEDULE, BUT NOT LESS THAN 1 BAR DIAMETER OR REQUIRED COVER FROM 'REBAR COVER TABLE'
   B. CLEAR SPACING BETWEEN BARS IS GREATER THAN 2xCLEAR COVER
   C. IF CONDITION B IS NOT MET FOR A GIVEN BAR, RECALCULATE LENGTH USING A COVER EQUAL TO ONE-HALF OF THE CLEAR BAR SPACING
4. LENGTHS NOTED BASED ON Fy = 60,000 PSI.
   A. FOR OTHER YIELD STRENGTHS, MULTIPLY LENGTHS NOTED BY Fy/60,000

LAP SPLICE NOTES:
1. ALL SPLICES SHALL BE WIRED IN CONTACT
2. ALL SPLICES ARE 'LTS' UNLESS NOTED OTHERWISE
3. SMALLER BAR LAP LENGTH SHALL BE USED WHEN SPLICING DIFFERENT SIZED BARS
   A. COMPRESSION LAP LENGTH SHALL NOT BE LESS THAN 'LCE' OF THE LARGER BAR
   B. TENSION LAP LENGTH SHALL NOT BE LESS THAN 'LTE' OF THE LARGER BAR
4. BUNDLED BAR SPLICES:
   A. INDIVIDUAL BAR SPLICES WITHIN THE BUNDLE SHALL BE STAGGERED BY 40xBAR DIAMETER
   B. INCREASE LAP LENGTH 20% FOR A 3 BAR BUNDLE
   C. INCREASE LAP LENGTH 33% FOR A 4 BAR BUNDLE
5. TOP AND BOTTOM BEAM SPLICES SHALL BE STACKED VERTICALLY

HOOK EMBEDMENT NOTES:
1. SCHEDULED HOOK EMBEDMENT LENGTHS ASSUME:
   A. SIDE COVER IS 2 1/2 INCHES OR GREATER
   B. COVER BEYOND IS 2 INCHES OR GREATER
2. IF REINFORCING IS SPECIFIED AS EPOXY COATED, INCREASE SCHEDULED LENGTHS BY 20%
3. IF LIGHTWEIGHT AGGREGATE IS SPECIFIED, INCREASE SCHEDULED LENGTHS BY 33%
4. IF SIDE COVER IS LESS THAN 2 1/2 INCHES, INCREASE LENGTHS BY 25%

8 NO SCALE REINFORCING DEVELOPMENT, PLACEMENT, AND BEND INFO

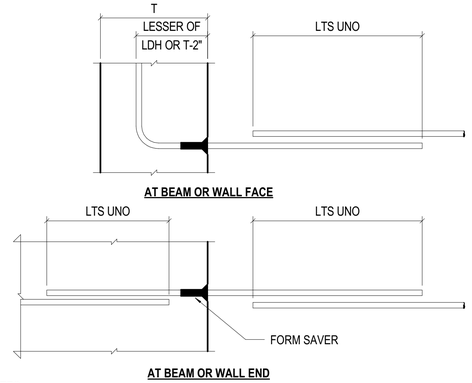

AT BEAM OR WALL FACE

AT BEAM OR WALL END

NOTES:
1. FORM SAVERS SHOWN ON DRAWINGS ARE SUGGESTED BASED ON ANTICIPATED CONSTRUCTION SEQUENCE AND FORMING SYSTEM, GENERAL CONTRACTORS AND SUB-CONTRACTORS MAY COORDINATE AND INSTALL CONTINUOUS BARS OR BREAK-OUT BARS TO PROVIDE EQUIVALENT CONTINUITY

6 NO SCALE TYP FORMSAVER

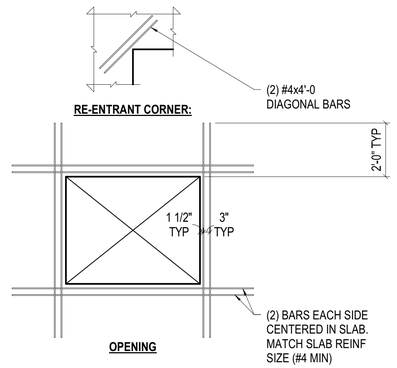

RE-ENTRANT CORNER:

OPENING

NOTES:
1. DETAIL APPLIES FOR ALL OPENINGS IN SOGs
2. REINF NOT REQUIRED AT OPENINGS SMALLER THAN 10"x10"

3 3/8" = 1'-0" TYP TRIM REINF

STUDIO SW ARCHITECTS
2101 Mountain Road NW Suite B | Albuquerque NM 87104
505-843-9639 | www.studioswarch.com

© 2025 Studio Southwest Architects, Inc. Duplication or reproduction by any means without the express written consent of Studio Southwest Architects, Inc. is a violation of federal and international law. The information contained in this document is the intellectual property of Studio Southwest Architects, Inc. and all rights thereto are reserved.

CONSULTANTS

MARTIN/MARTIN CONSULTING ENGINEERS
6100 Indian School Road NE, Suite 225 | Albuquerque, NM 87110
505.242.4435 martinmartin.com

Architect

Engineer

DANIEL MULLINS NEW MEXICO 29362 08/15/2025 PROFESSIONAL ENGINEER

SFS HONDO FIRE STATION EXPANSION

645 OLD LAS VEGAS HIGHWAY SANTA FE, NM 87505

No	Date	Description
Revision Schedule		

ISSUE:	100% CONSTRUCTION DOCUMENTS
PROJECT NUMBER:	25.0149.S.01
FILE:	
DRAWN BY:	EM
CHECKED BY:	JO
DATE:	AUGUST 15, 2025

SHEET TITLE

CONCRETE DETAILS

S-310

MM JOB # 25.0149.S.01
PRINCIPAL: BENJAMIN DOWNEY
EOR: DAN MULLINS
PROJECT MANAGER: JONATHAN OLTMAN
DESIGNERS: JAAN YANG
LEAD REVIT TECH: ELENA MAN
DATE PRINTED: 8/14/2025 2:45:14 PM
FILE PATH: Autodesk Docs://ACC-MM SDS/25.0149.S.01 - HONDO FIRE STATION EXPANSION - S25.rvt

8/14/2025 2:45:15 PM

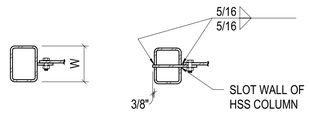

TYPICAL THROUGH PLATE OPTION

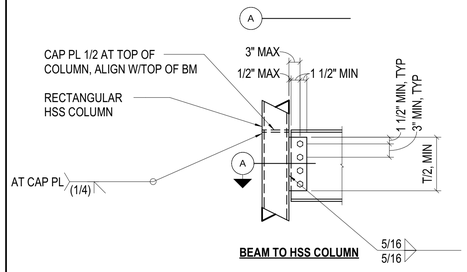

BEAM TO HSS COLUMN

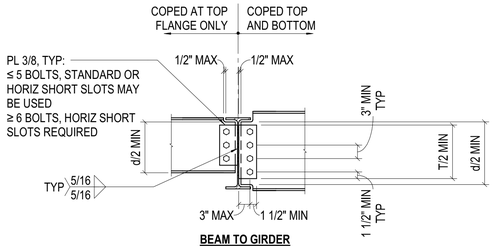

BEAM TO GIRDER

STEEL CONNECTION SCHEDULE

BEAM SIZE	# OF ROWS OF BOLTS OR # OF BOLTS (#)
W8	(2)
W12	(3)

11 3/4" = 1'-0" STEEL CONNECTION SCHEDULE/DETAILS

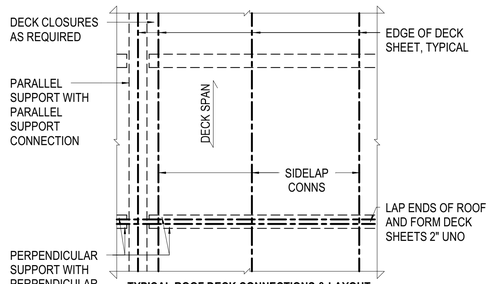

TYPICAL ROOF DECK CONNECTIONS & LAYOUT

NOTES:
1. DECK TYPE INDICATED ON PLAN THUS:
2. SEE SCHEDULES BELOW FOR ADDITIONAL INFORMATION, MINIMUM PROPERTIES AND CONNECTION REQUIREMENTS.
3. INSTALL DECK OVER 4 SUPPORTS (3) SPAN CONTINUOUS WHERE POSSIBLE
4. HANGERS WITH A 50 POUND MAXIMUM LOAD MAY BE PLACED AT 4'-0" MINIMUM SPACING EACH WAY
5. SEE SPECIFICATIONS FOR DECK FINISH

ROOF DECK SCHEDULE

MARK	DECK TYPE		DECK CONN TYPE	DIAPHRAGM SHEAR (PLF) (NOTE 3)	MAX DECK SPAN
	TYPE	GAGE			
1.5B-20	1.5B	20	A	915	5'-0"

NOTES:

1. INSTALL DECK OVER 4 SUPPORTS (3) SPAN CONTINUOUS WHERE POSSIBLE
2. IF ACTUAL DECK SPANS EXCEED MAXIMUM SPAN LENGTHS INDICATED ABOVE, REQUEST ADDITIONAL INFORMATION FROM ENGINEER
3. DIAPHRAGM SHEAR CAPACITY NOTED IS BASED ON ALLOWABLE STRESS DESIGN AND...

ROOF DECK PROPERTIES

DECK TYPE	DECK DEPTH (IN)	DECK GAGE	DECK Fy (KSI)	I POS (IN^4/FT)	S POS (IN^3/FT)	S NEG (IN^3/FT)	MINIMUM DECK BEARINGS (IN)	
							EXTERIOR	INTERIOR
1.5B	1 1/2	20	50	0.197	0.224	0.229	1 1/2	3

DECK CONNECTION SCHEDULE

TYPE	PERPENDICULAR SUPPORT MEMBERS		PARALLEL SUPPORT MEMBERS		SIDELAPS	
	CONNECTION	PATTERN	CONNECTION	PATTERN	CONNECTION	PATTERN
A	3/4" VISIBLE Ø ARC SPOT WELD	36/7	3/4" VISIBLE Ø ARC SPOT WELD	12" OC	#10 SCREW	12" OC

8 NO SCALE ROOF DECK SCHEDULE, LAYOUT & CONNECTIONS

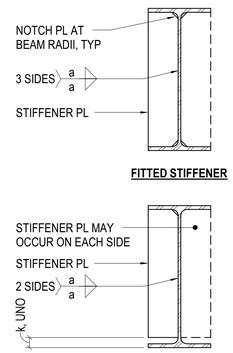

PLATE WELD SCHEDULE

STIFFENER PL THK	WELD SIZE a (UNO)
3/16"	3/16"
1/4"	3/16"
5/16"	1/4"
3/8"	1/4"
1/2"	5/16"
5/8"	7/16"
3/4"	1/2"
1"	5/8"
1 1/4"	7/8"

NOTES:
1. ACTUAL STIFFENER GEOMETRY VARIES, SEE DETAILS
2. STIFFENER SURFACES THAT CONTACT BEAM FLANGES SHALL BE FINISHED FOR BEARING

4 1 1/2" = 1'-0" TYPICAL WIDE FLANGE BEAM STIFFENER

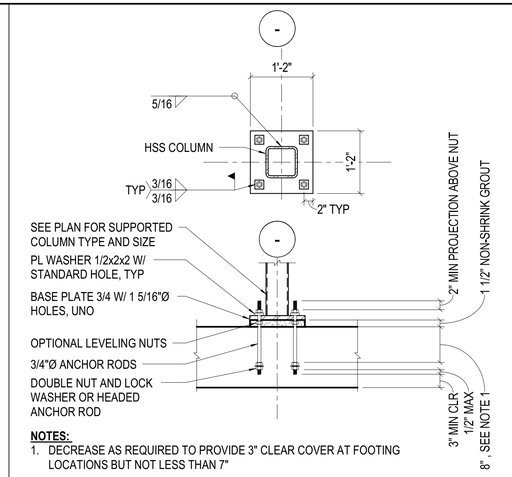

NOTES:
1. DECREASE AS REQUIRED TO PROVIDE 3" CLEAR COVER AT FOOTING LOCATIONS BUT NOT LESS THAN 7"

1 3/4" = 1'-0" TYPICAL COLUMN BASE PLATE

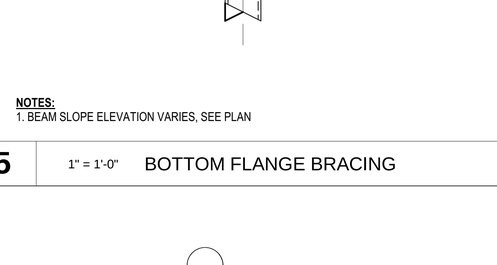

NOTES:
1. BEAM SLOPE ELEVATION VARIES, SEE PLAN

5 1" = 1'-0" BOTTOM FLANGE BRACING

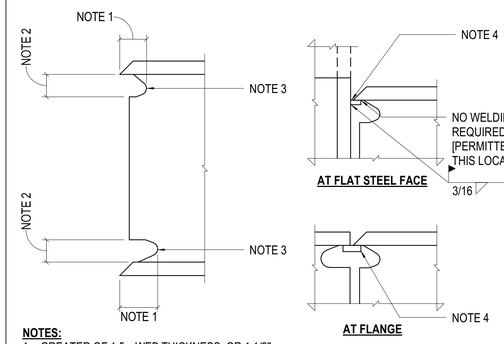

NOTES:
1. GREATER OF 1.5 x WEB THICKNESS OR 1 1/2"
2. GREATER OF 1.0 x WEB THICKNESS OR 3/4", SHALL NOT EXCEED 2"
3. MIN RADIUS = 3/8"
4. BACKING AT CONTRACTOR'S OPTION, SEE COMMENTARY AWS D1.1 FOR THICKNESS, BACKING MAY REMAIN IN PLACE UNO

2 3" = 1'-0" TYPICAL WIDE FLANGE CJP WELD ACCESS AND BACKING

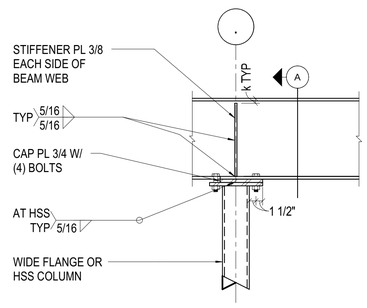

NOTES:
1. PERPENDICULAR MEMBERS NOT SHOWN

9 3/4" = 1'-0" BEAM OVER COLUMN

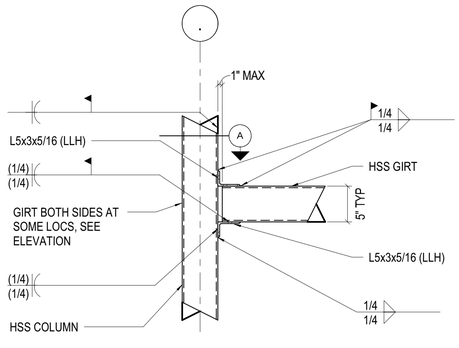

6 NO SCALE VERTICAL POST TO GIRT CONNECTION

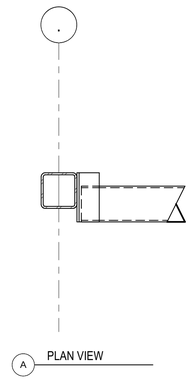

DESIGNERS: JIAAN YANG
LEAD REVIT TECH: ELENA MAN
DATE PRINTED: 8/14/2025 2:45:15 PM
FILE PATH: Autodesk Docs://ACC-MM S25/25.0149.S.01 - HONDO FIRE STATION EXPANSION - S25.rvt

MM JOB #: 25.0149.S.01
PRINCIPAL: BENJAMIN DOWNEY
EOR: DAN MULLINS
PROJECT MANAGER: JONATHAN OLTMAN

STUDIO SW ARCHITECTS
2101 Mountain Road NW Suite B | Albuquerque NM 87104
505-843-9639 | www.studioswarch.com

© 2025 Studio Southwest Architects, Inc. Duplication or reproduction by any means without the express written consent of Studio Southwest Architects, Inc. is a violation of federal and international law. The information contained in this document is the intellectual property of Studio Southwest Architects, Inc. and all rights thereto are reserved.

CONSULTANTS

MARTIN/MARTIN CONSULTING ENGINEERS
6100 Indian School Road NE, Suite 225 | Albuquerque, NM 87110
505.242.4435 martinmartin.com

Architect

Engineer

DANIEL MULLINS NEW MEXICO 29362 08/15/2025 PROFESSIONAL ENGINEER

SFS HONDO FIRE STATION EXPANSION

645 OLD LAS VEGAS HIGHWAY SANTA FE, NM 87505

No	Date	Description
Revision Schedule		

ISSUE:	100% CONSTRUCTION DOCUMENTS
PROJECT NUMBER:	25.0149.S.01
FILE:	
DRAWN BY:	EM
CHECKED BY:	JO
DATE:	AUGUST 15, 2025

SHEET TITLE

STEEL DETAILS

S-500

8/14/2025 2:45:15 PM

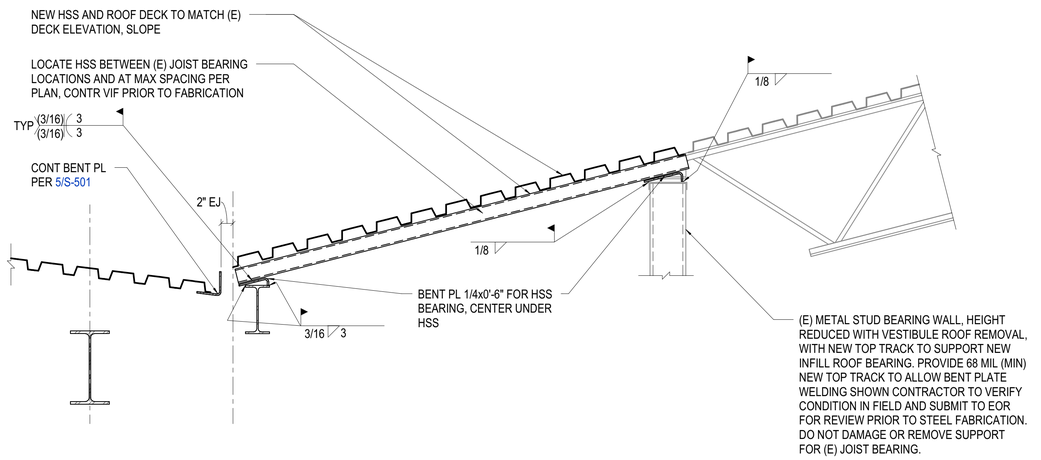

10 1" = 1'-0" ROOF SECTION AT (E) BUILDING - VESTIBULE

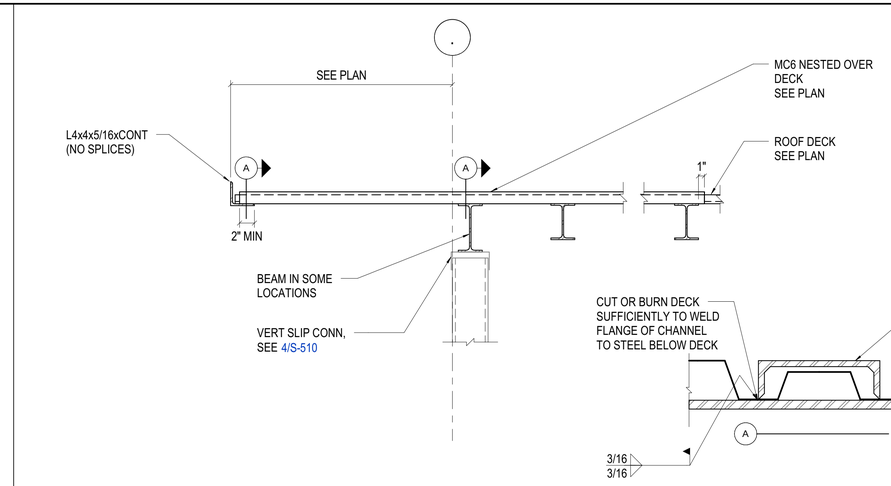

4 NO SCALE DECK OVERHANG SUPPORT

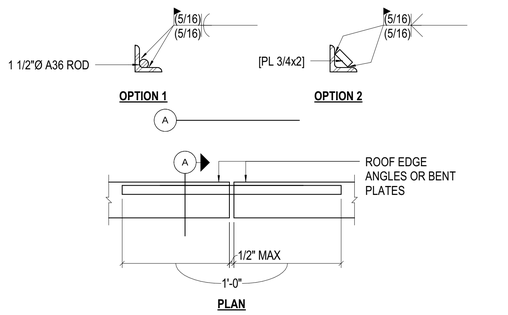

NOTES:
1. DETAIL APPLIES AT ALL ROOF METAL DECK EDGES UNLESS NOTED OTHERWISE

11 1 1/2" = 1'-0" TYPICAL EDGE ANGLE CHORD SPLICE

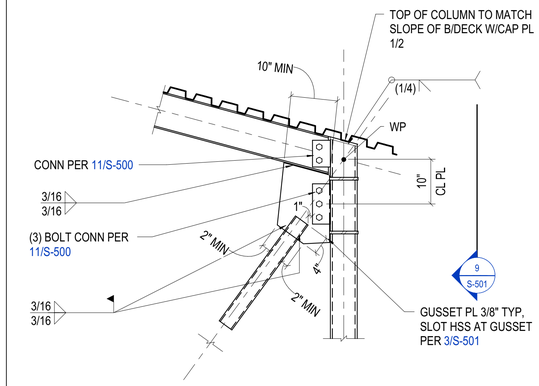

8 3/4" = 1'-0" BRACED FRAME TOP CONNECTION

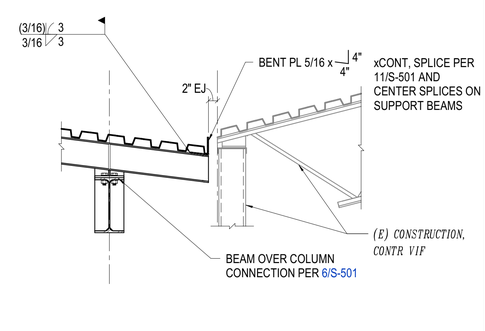

5 3/4" = 1'-0" CANTILEVER BEAM AT EXPANSION JOINT

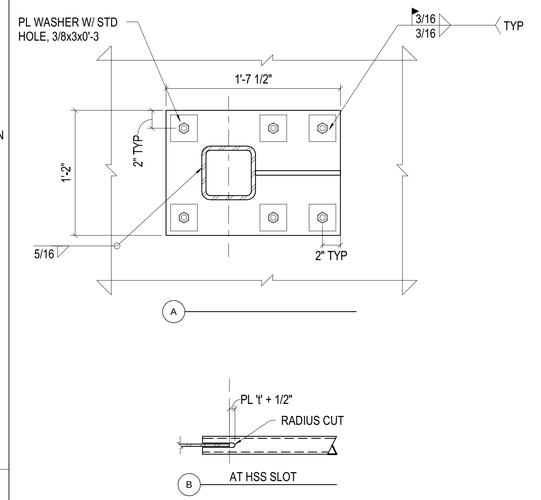

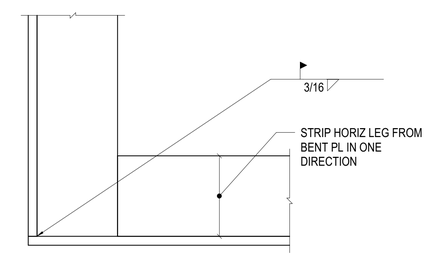

12 3/4" = 1'-0" ROOF EDGE ANGLE CORNER CONNECTION

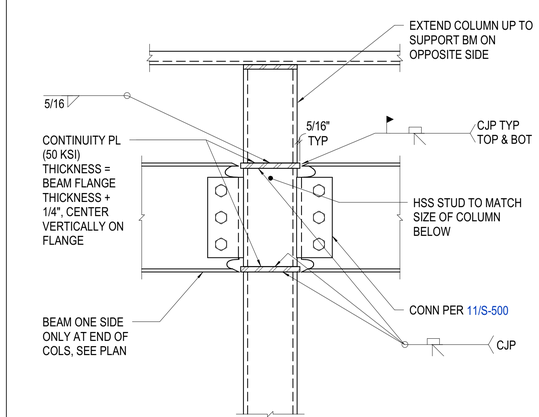

NOTES:
1. SEE 2/S-500 FOR CJP WELD REQUIREMENTS

9 1 1/2" = 1'-0" MOMENT CONNECTION THROUGH HSS COLUMN

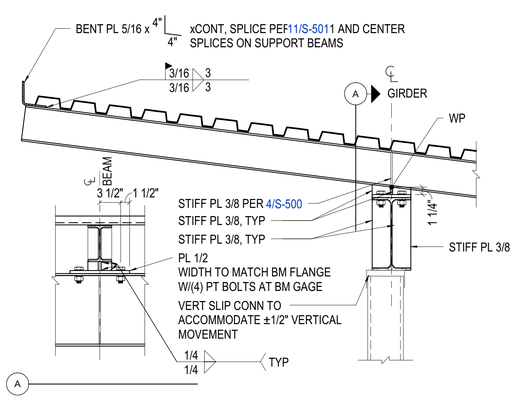

6 1" = 1'-0" CANTILEVER BEAM AT SOUTH ROOF

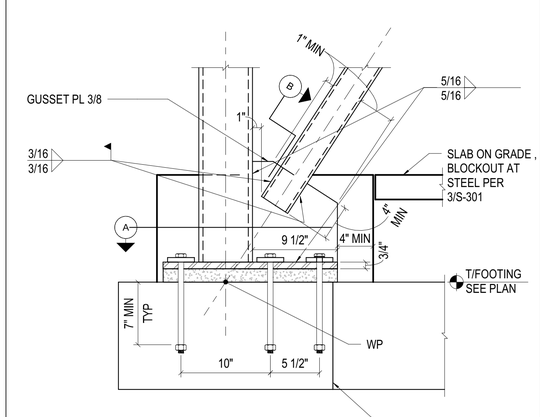

NOTES:
1. FOR ADDITIONAL REQUIREMENTS, SEE 1/S-500

3 1 1/2" = 1'-0" BRACED FRAME BASE CONNECTION

STUDIO SW ARCHITECTS
2101 Mountain Road NW Suite B | Albuquerque NM 87104
505-843-9639 | www.studioswarch.com

© 2025 Studio Southwest Architects, Inc. Duplication or reproduction by any means without the express written consent of Studio Southwest Architects, Inc. is a violation of federal and international law. The information contained in this document is the intellectual property of Studio Southwest Architects, Inc. and all rights thereto are reserved.

CONSULTANTS

MARTIN/MARTIN CONSULTING ENGINEERS
6100 Indian School Road NE, Suite 225 | Albuquerque, NM 87110
505.242.4435 martinmartin.com

Architect

Engineer

DANIEL MULLINS NEW MEXICO 29362 08/15/2025 PROFESSIONAL ENGINEER

SFS HONDO FIRE STATION EXPANSION

645 OLD LAS VEGAS HIGHWAY SANTA FE, NM 87505

No	Date	Description
Revision Schedule		

ISSUE:	100% CONSTRUCTION DOCUMENTS
PROJECT NUMBER:	25.0149.S.01
FILE:	
DRAWN BY:	EM
CHECKED BY:	JO
DATE:	AUGUST 15, 2025

SHEET TITLE

STEEL DETAILS

S-501

DESIGNERS: JAAN YANG
LEAD REVIT TECH ELENA MAN
DATE PRINTED:8/14/2025 2:45:15 PM
FILE PATH: Autodesk Docs://ACC-MM S25\25.0149.S.01 - HONDO FIRE STATION EXPANSION - S25.rvt
MM JOB # 25.0149.S.01
PRINCIPAL:BENJAMIN DOWNEY
EOR:DAN MULLINS
PROJECT MANAGER: JONATHAN OLTMAN

8/14/2025 2:45:15 PM

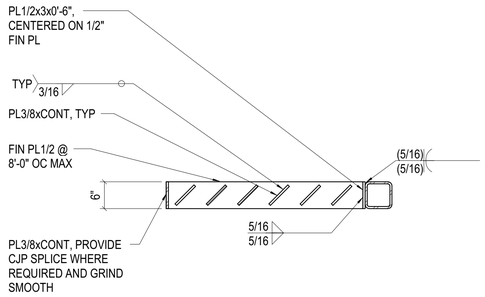

NOTES:
1. SEE ARCHITECTURE DRAWINGS FOR OTHER AWNING DETAILS

7 3/4" = 1'-0" AWNING SECTION

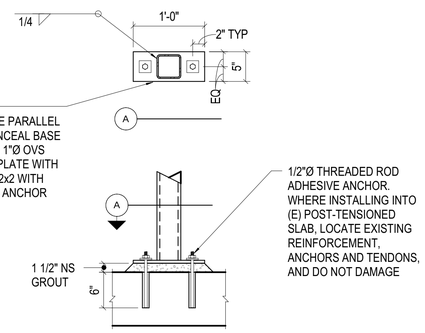

4 1" = 1'-0" COLUMN BASE PLATE TO (E) SLAB

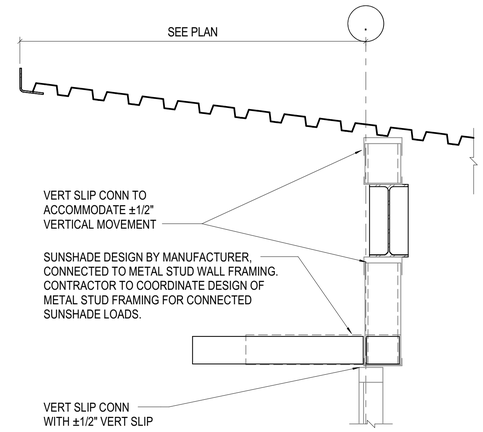

1 1" = 1'-0" ROOF EDGE - SLIP CONN AND SUN SHADE

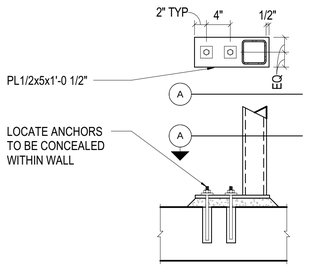

NOTES:
1. SEE 4/S-502 FOR ADDITIONAL INFORMATION
2. MAY BE USED IN LIEU OF DETAIL 4/S-502 BASED ON ANCHOR LOCATIONS AND SLAB GEOMETRY

5 1" = 1'-0" OPTIONAL OFFSET COLUMN BASE PLATE TO (E) SLAB

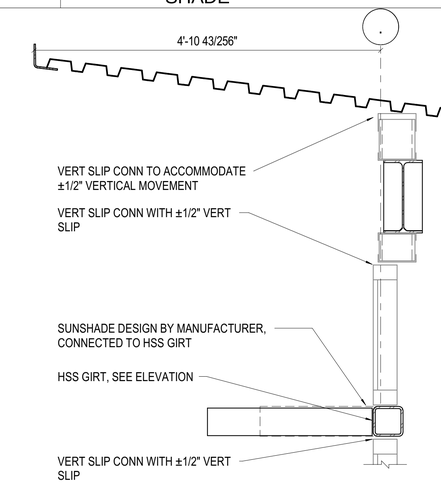

2 1" = 1'-0" ROOF EDGE - STOREFRONT OVER SUNSHADE

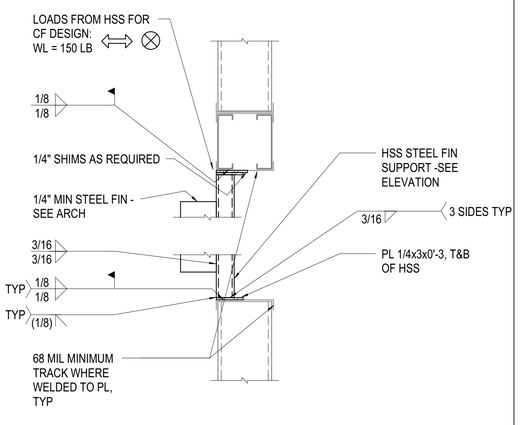

6 1 1/2" = 1'-0" HSS FIN SUPPORT TO WINDOW STUDS

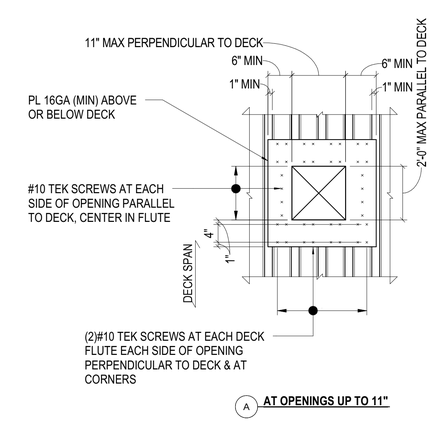

3 3/4" = 1'-0" SUPPORT AT ROOF DECK PENETRATION

STUDIO SW ARCHITECTS
2101 Mountain Road NW Suite B | Albuquerque NM 87104
505-843-9639 | www.studioswarch.com

© 2025 Studio Southwest Architects, Inc. Duplication or reproduction by any means without the express written consent of Studio Southwest Architects, Inc. is a violation of federal and international law. The information contained in this document is the intellectual property of Studio Southwest Architects, Inc. and all rights thereto are reserved.

CONSULTANTS

MARTIN/MARTIN CONSULTING ENGINEERS
6100 Indian School Road NE, Suite 225 | Albuquerque, NM 87110
505.242.4435 martinmartin.com

Architect

Engineer

DANIEL MULLINS NEW MEXICO 29362 08/15/2025 PROFESSIONAL ENGINEER

SFS HONDO FIRE STATION EXPANSION

645 OLD LAS VEGAS HIGHWAY SANTA FE, NM 87505

No	Date	Description
Revision Schedule		

ISSUE:	100% CONSTRUCTION DOCUMENTS
PROJECT NUMBER:	25.0149.S.01
FILE:	
DRAWN BY:	EM
CHECKED BY:	JO
DATE:	AUGUST 15, 2025

SHEET TITLE

STEEL DETAILS

S-502

DESIGNERS: JAAN YANG
LEAD REVIT TECH:ELENA MAN
DATE PRINTED:8/14/2025 2:45:15 PM
FILE PATH: Autodesk Docs://ACC-MM S25\25.0149.S.01 - HONDO FIRE STATION EXPANSION - S25.rvt
MM JOB #:25.0149.S.01
PRINCIPAL:BENJAMIN DOWNEY
EOR:DAN MULLINS
PROJECT MANAGER: JONATHAN OLTMAN

8/14/2025 2:45:16 PM

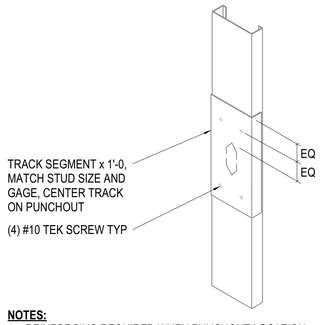

NOTES:
1. REINFORCING REQUIRED WHEN PUNCHOUT LOCATION SPECIFIED IN OTHER DETAILS CANNOT BE ACHIEVED
2. PUNCHOUT REINFORCING INDICATED IS A MINIMUM, FINAL REINFORCING SHALL BE DESIGNED BY CONTRACTOR

7 3/4" = 1'-0" CONTRACTOR ENGINEERED WALL - PUNCHOUT REINFORCING

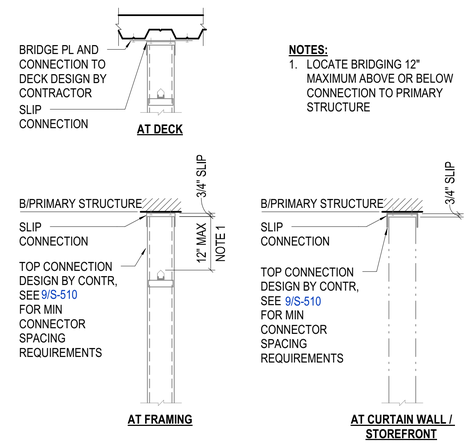

NOTES:
1. LOCATE BRIDGING 12" MAXIMUM ABOVE OR BELOW CONNECTION TO PRIMARY STRUCTURE

4 3/4" = 1'-0" CONTRACTOR ENGINEERED WALL - FRAMING TO B/PRIMARY STRUCTURE

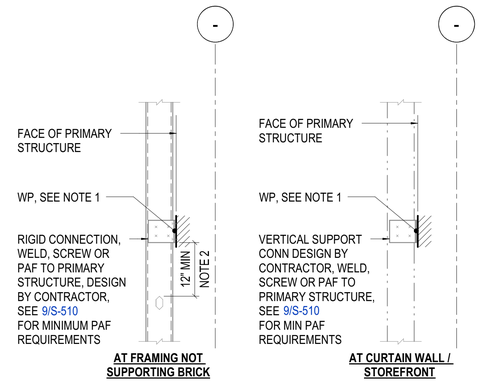

NOTES:
1. DESIGN CONNECTION TO DELIVER VERTICAL SHEAR AND HORIZONTAL AXIAL FORCE AT WORKPOINT, DO NOT IMPOSE MOMENT ON PRIMARY STRUCTURE
2. SEE DETAIL 7/S-510 IF MINIMUM DIMENSION CAN NOT BE ACHIEVED

8 3/4" = 1'-0" CONTRACTOR ENGINEERED WALL - FIXED CONNECTION MINIMUM REQUIREMENTS

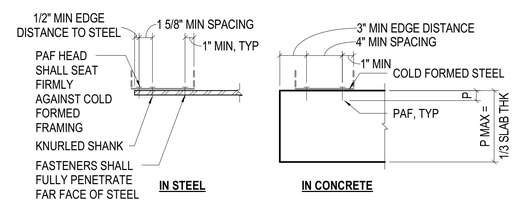

NOTES:
1. DO NOT USE PAFs TO RESIST TENSION LOADS IN CONCRETE
2. DO NOT USE PAFs IN MASONRY
3. IF TRACK IS GREATER THAN 54 MIL THICKNESS, PRE-DRILL HOLES FOR PAFs

MINIMUM POWDER ACTUATED FASTENER (PAF) REQUIREMENTS

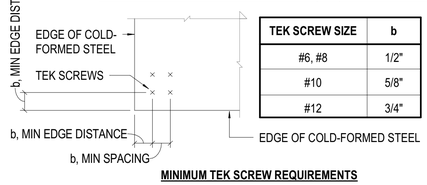

TEK SCREW SIZE	b
#6, #8	1/2"
#10	5/8"
#12	3/4"

MINIMUM TEK SCREW REQUIREMENTS

9 1 1/2" = 1'-0" CONTRACTOR ENGINEERED WALL - FASTENER MINIMUM REQUIREMENTS

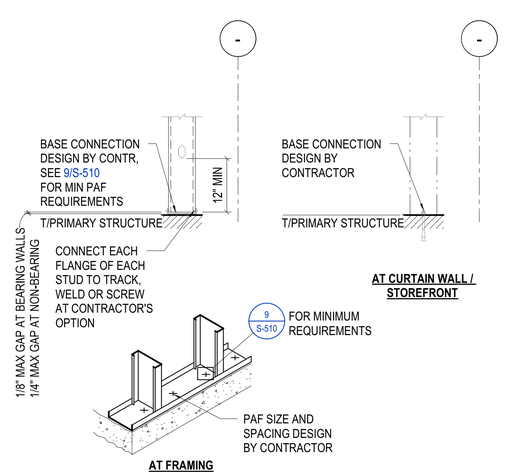

6 3/4" = 1'-0" CONTRACTOR ENGINEERED WALL - BASE CONN MIN REQUIREMENTS

DESIGN CRITERIA FOR PERFORMANCE SPECIFIED COLD FORMED STEEL FRAMING (CFSF)

1) GENERAL COLD FORMED ST

1A) COLD FORMED STEEL FRAMING (CFSF) USED FOR EXTERIOR CLADDING SUPPORT AND LOAD BEARING FRAMING RELATED TO EXISTING BUILDING MODIFICATIONS IS A PERFORMANCE SPECIFIED SYSTEM DESIGNED (ENGINEERED) AND PROVIDED BY THE CONTRACTOR

1B) THE CONTRACTOR SHALL DESIGN ALL MEMBERS AND CONNECTIONS FORMING A COMPLETE SYSTEM FOR THE CLADDING SELF WEIGHT, WIND AND SEISMIC FORCES AND GRAVITY LOADS WHERE APPLICABLE, INDICATED IN THE DESIGN CRITERIA SECTION AND AS INDICATED IN THE STRUCTURAL DOCUMENTS

1C) INFORMATION PERTAINING TO THE FRAMING IS SHOWN THROUGHOUT THE ARCHITECTURAL AND STRUCTURAL DOCUMENTS AND IN THE SPECIFICATIONS. CONTRACTOR SHALL REFERENCE AND COORDINATE FRAMING WITH ALL TRADES AND DESIGN DOCUMENTS

1D) REFER TO SPECIFICATIONS FOR ADDITIONAL REQUIREMENTS INCLUDING PROFESSIONAL ENGINEERING AND SUBMITTAL REQUIREMENTS

1E) VARIATIONS PROPOSED BY THE CONTRACTOR TO ACCOMMODATE PREFABRICATION AND ALTERNATE SCHEMES SHALL BE SUBMITTED FOR APPROVAL PRIOR TO PREPARING DRAWINGS AND ENGINEERING OF THE COLD FORMED STEEL FRAMING.

2) BIDDING REQUIREMENTS

2A) THE CONTRACTOR IS RESPONSIBLE FOR PROVIDING A BID THAT INCLUDES ALL ITEMS ASSOCIATED WITH THE DESIGN AND CONSTRUCTION OF THE EXTERIOR WALL AND SOFFIT FRAMING, INCLUDING BUT NOT LIMITED TO:
- DESIGN OF THE FRAMING MEMBERS (STUDS, SILLS, HEADERS, JAMBS, SOFFITS, HANGERS & KICKERS, ETC.)
- CONNECTION DESIGN: BOTH FRAMING-TO-FRAMING CONNECTIONS AND CONNECTIONS BETWEEN FRAMING AND THE PRIMARY STRUCTURAL FRAME
- COORDINATION AND INSTALLATION OF ALL FRAMING

2B) BIDS SHALL BE BASED ON CONTRACTOR'S ENGINEERED SIZES TO RESIST THE DESIGN FORCES AND MEET THE MINIMUM REQUIREMENTS INDICATED IN THE CONTRACT DOCUMENTS
- DO NOT BASE BIDS SOLELY ON THE MINIMUM REQUIREMENTS

2C) FRAMING MEMBERS DEPTHS SHALL BE AS NOTED ON ARCHITECTURAL DOCUMENTS, UNLESS NOTED OTHERWISE

2D) VARY MEMBER THICKNESS, FLANGE WIDTH, YIELD STRESS, AND SPACING AS REQUIRED TO SATISFY:
- INDICATED PERFORMANCE CRITERIA
- MINIMUM STRUCTURAL REQUIREMENTS INDICATED IN THE SPECIFICATIONS AND STRUCTURAL DETAILS

3) ENGINEERING REQUIREMENTS

3A) GENERAL:
- FRAMING MEMBERS SHALL BE AS NOTED ON THE ARCHITECTURAL DOCUMENTS, UNLESS NOTED OTHERWISE
- DO NOT CONNECT FRAMING TO THE PRIMARY STRUCTURAL FRAMING AT LOCATIONS OR IN WAYS NOT SPECIFICALLY INDICATED IN THE DETAILS
- ALL CONNECTIONS TO PRIMARY STRUCTURE SHALL BE DESIGNED AS PINNED CONNECTIONS. DO NOT DELIVER MOMENT TO PRIMARY STRUCTURE UNLESS SPECIFICALLY INDICATED.
- DO NOT CONNECT FRAMING TO THE BOTTOM FLANGE OF BEAMS UNLESS SPECIFICALLY INDICATED IN STRUCTURAL DETAILS

3B) GC / COLD FORMED STEEL FRAMING DESIGNER / CLADDING DESIGNER COORDINATION:
- COLD FORMED STEEL FRAMING MEMBERS AND FRAMING ATTACHMENT SHALL BE DESIGNED FOR THE TRIBUTARY LOADING AT THE FRAMING SPACING INDICATED ON THE CONTRACT DOCUMENTS
- CLADDING SUPPLIER SHALL DESIGN CLADDING TO DISTRIBUTE LOAD UNIFORMLY TO AND ATTACH TO EACH FRAMING MEMBER.
- CLADDING ATTACHMENT SPACING WHICH DOES NOT EQUALLY DISTRIBUTE LOAD TO EACH STEEL FRAMING MEMBER IS NOT ACCEPTABLE WITHOUT APPROVAL FROM THE STEEL FRAMING SUPPLIER / DESIGNER AND THE PROJECT ENGINEER OF RECORD (EOR)
- IF THE CLADDING SUPPLIER DOES NOT AND / OR CANNOT UNIFORMLY LOAD / ATTACH TO EACH STEEL FRAMING MEMBER, THE LOADS FROM THE CLADDING SUPPLIER MUST BE PROVIDED TO THE FRAMING SUPPLIER. THE STEEL FRAMING SUPPLIER WILL NEED TO INCORPORATE THESE INCREASED LOADS INTO THE FRAMING DESIGN.
- GC SHALL COORDINATE BETWEEN COLD FORMED STEEL FRAMING SUPPLIER AND CLADDING SUPPLIER AS REQUIRED.

3C) LOADS:
- WIND LOADS GIVEN IN THESE DOCUMENTS ARE BASED ON A COMPONENT AND CLADDING TRIBUTARY AREA OF 10 SQUARE FEET. REDUCTION IN LOADS BASED ON TRIBUTARY AREA ARE ALLOWED AS PERMITTED IN THE GOVERNING BUILDING CODE.
- CALCULATE AND APPLY TO COLD FORMED STEEL FRAMING HEADERS, SILLS & JAMBS CUMULATIVE LINE AND CONCENTRATED TRIBUTARY LOADS FROM CLADDING DEAD LOAD AND WIND PRESSURES ON WINDOWS, LOUVERS, DOORS, CURTAIN WALL, AND OTHER OPENINGS
- COORDINATE MULLION AND JAMB LOCATIONS WITH THE GENERAL CONTRACTOR
- CONTRACTOR SHALL ACCOUNT FOR LOCALIZED LOADS AND MOMENTS DUE TO ECCENTRICALLY APPLIED LOADS SUCH AS SLIP CONNECTIONS AND WINDOW HEAD TRACKS

3D) PRIMARY FRAME DEFLECTIONS: PROVIDE VERTICAL SLIP CONNECTIONS AND DEFLECTION TRACKS AS NEEDED TO ACCOMMODATE VERTICAL DEFLECTIONS OF THE PRIMARY STRUCTURAL FRAMING. UNLESS NOTED OTHERWISE, PROVIDE THE FOLLOWING ALLOWANCES FOR VERTICAL DEFLECTION OF THE PRIMARY STRUCTURAL FRAMING:
- AT EXTERIOR / SPANDREL INFILL FRAMING: 3/4"
- AT EXTERIOR / SPANDREL BYPASS FRAMING: 3/4"
- AT INTERIOR FRAMING: GREATER OF L/240 OR 3/4"

3E) VERTICAL DEFLECTION CRITERIA: DESIGN COLD FORMED METAL FRAMING HEADERS TO MEET THE FOLLOWING VERTICAL DEFLECTION CRITERIA:
- FOR STUDS SUPPORTING STUCCO = SPAN / 240
- FOR STUDS SUPPORTING OTHER = SPAN / 240

3F) HORIZONTAL DEFLECTION CRITERIA: DESIGN COLD FORMED METAL FRAMING MEMBERS TO MEET THE FOLLOWING HORIZONTAL DEFLECTION CRITERIA:
- FOR STUDS BACKING-UP STUCCO OR THIN SET ADHERED VENEER = SPAN / 360
- FOR STUDS BACKING-UP OTHER = SPAN / 240
- PER IBC TABLE 1604.3 FOOTNOTE F, WIND LOAD IS PERMITTED TO BE TAKEN AS 0.42 TIMES THE COMPONENT AND CLADDING ULTIMATE LOADS FOR THE PURPOSE OF DETERMINING DEFLECTION LIMITS.

4) CONSTRUCTION REQUIREMENTS

4A) CONSTRUCTION SHALL CONFORM TO THE MINIMUM REQUIREMENTS SHOWN ON THE CONTRACT DOCUMENTS, INCLUDING DETAILS THROUGHOUT THE STRUCTURAL DOCUMENTS AND MINIMUM REQUIREMENTS INDICATED IN DETAILS ON THIS SHEET
- SEE DETAILS THIS SHEET INDICATING ADDITIONAL MINIMUM CFSF CRITERIA

4B) MINIMUM STUD GAGES: MINIMUM STUD THICKNESS BASED ON THE ATTACHMENT OF CLADDING MATERIAL IS GIVEN IN THE FOLLOWING TABLE:

	MATERIAL ATTACHED TO STUDS	MIN. MIL THICKNESS	MAX. STUD SPACING
-	ALL	33	24" OC
-	STUDS WITH FIELD WELDING	68	NA

4C) ADDITIONAL CRITERIA FOR CFSF:
- PROVIDE HORIZONTAL STUD BRIDGING AS REQUIRED TO BRACE FRAMING, MINIMUM OF (1) ROW AT MID-HEIGHT
- COLD FORMED STEEL TRACK THICKNESS SHALL BE EQUAL TO OR GREATER THAN THE CONNECTED WALL STUD THICKNESS
- ALL CONNECTIONS SHALL USE PREFABRICATED FRAMING CONNECTORS (CLIPS). DO NOT SITE / FIELD FABRICATE CONNECTORS FROM TRACKS OR STUDS UNLESS SPECIFICALLY SHOWN ON THE CONTRACT DOCUMENTS
- DO NOT USE PAF's TO RESIST TENSION LOADS IN CONCRETE
- DO NOT NOTCH, DRILL OR OTHERWISE MODIFY FRAMING WITHOUT PRIOR WRITTEN APPROVAL OF THE DESIGN ENGINEER AND EOR

3 3/4" = 1'-0" CONTRACTOR ENGINEERED WALL - NOTES / REQUIRED DESIGN CRITERIA

STUDIO SW ARCHITECTS
2101 Mountain Road NW Suite B | Albuquerque NM 87104
505-843-9639 | www.studioswarch.com

© 2025 Studio Southwest Architects, Inc. Duplication or reproduction by any means without the express written consent of Studio Southwest Architects, Inc. is a violation of federal and international law. The information contained in this document is the intellectual property of Studio Southwest Architects, Inc. and all rights thereto are reserved.

CONSULTANTS

MARTIN/MARTIN CONSULTING ENGINEERS
6100 Indian School Road NE, Suite 225 | Albuquerque, NM 87110
505.242.4435 martinmartin.com

Architect

Engineer

DANIEL MULLINS NEW MEXICO 29362 08/15/2025 PROFESSIONAL ENGINEER

No	Date	Description
Revision Schedule		

ISSUE: 100% CONSTRUCTION DOCUMENTS
PROJECT NUMBER: 25.0149.S.01
FILE:
DRAWN BY: EM
CHECKED BY: JO
DATE: AUGUST 15, 2025

SHEET TITLE

COLD FORMED FRAMING DETAILS

SFS HONDO FIRE STATION EXPANSION

645 OLD LAS VEGAS HIGHWAY SANTA FE, NM 87505

S-510

MM JOB # 25.0149.S.01
PRINCIPAL: BENJAMIN DOWNEY
EOR: DAN MULLINS
PROJECT MANAGER: JONATHAN OLTMAN

DESIGNERS: JAAN YANG
LEAD REVIT TECH: ELENA MAN
DATE PRINTED: 8/14/2025 2:45:16 PM
FILE PATH: Autodesk Docs://ACC-MM S25\25.0149.S.01 - HONDO FIRE STATION EXPANSION - S25.rvt

8/14/2025 2:45:16 PM

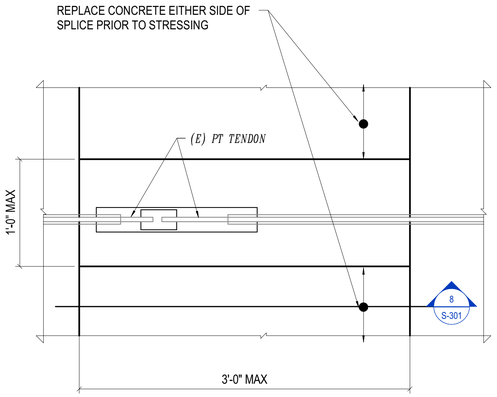

PLAN VIEW

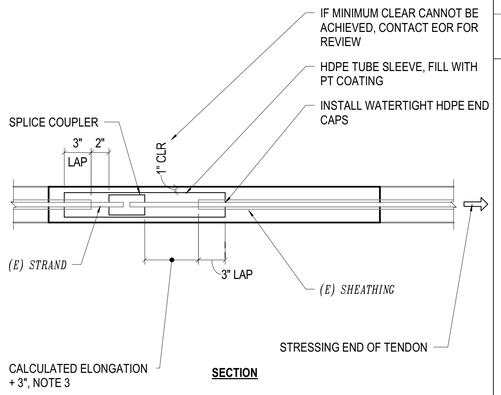

SECTION

NOTES:
1. CONTACT ENGINEER IF REPAIR AREA EXCEEDS ALLOWED MAXIMUM.
2. ALLOW INFILL CONCRETE TO ACHIEVE 75% f'c PRIOR TO TENSIONING.

11 NO SCALE TENDON SPLICE

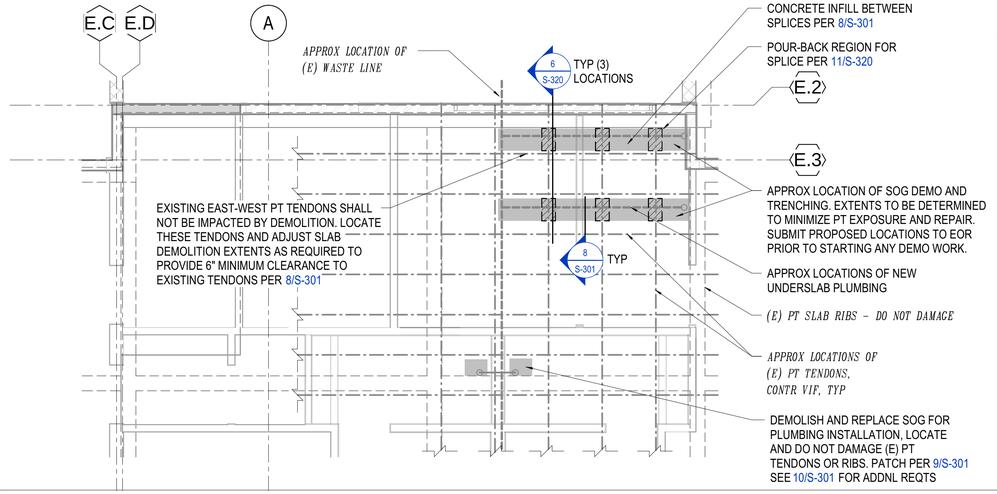

7 1/4" = 1'-0" PARTIAL PLAN AT SOG DEMO

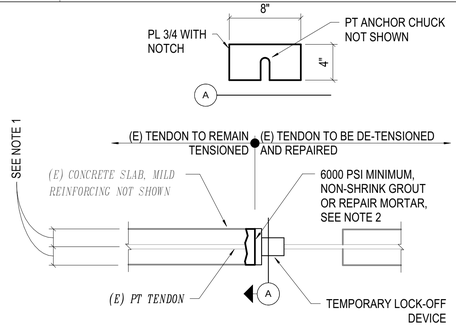

NOTES:
1. LOCATE LOCK-OFF DEVICE ALONG TENDON LENGTH WHERE TENDON DEPTH IS WITHIN MIDDLE THIRD OF SLAB THICKNESS. VERIFY WITH GROUND PENETRATING RADAR (GPR) PRIOR TO DEMOLITION.
2. ALLOW GROUT OR REPAIR MORTAR TO DEVELOP 4000 PSI (MINIMUM) STRENGTH PRIOR TO DE-TENSIONING.
3. FOLLOWING COMPLETION OF TENDON RE-TENSIONING, REMOVE LOCK-OFF DEVICE AND PLATE, REPAIR DAMAGED SHEATHING PER 12/S-320 AND REPLACE DEMOLISHED CONCRETE.

8 NO SCALE TEMPORARY TENDON LOCK-OFF

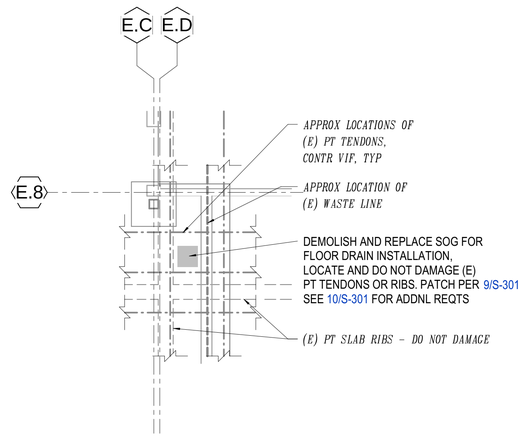

5 1/4" = 1'-0" PARTIAL PLAN - SOG DEMO AT EXTRACTOR

POST-TENSION REPAIR NOTES

1) PREPARATION OF REPAIR AREAS

1A) LOCATE ALL EXISTING REINFORCING BARS, POST-TENSIONING TENDONS, CONDUIT, ETC. IN AREA TO BE REPAIRED USING PACHOMETER, GROUND PENETRATING RADAR (GRP), X-RAY, OR OTHER MEANS ACCEPTABLE TO ENGINEER. TENDONS MAY OCCUR INDIVIDUALLY OR IN BUNDLES.

1B) SUBMIT CONSTRUCTION SEQUENCE AND DE-TENSIONING PROCEDURES FOR REVIEW AND APPROVAL BY ENGINEER BEFORE PROCEEDING.

1C) DETENSION OR LOCK-OFF STRESSED TENDONS WHERE NECESSARY AS PART OF CONTRACTOR'S MEANS AND METHODS PRIOR TO PERFORMING DEMOLITION.

1D) PERFORM CONCRETE REMOVAL WITH SMALL CONCRETE BREAKERS TO MINIMIZE DAMAGE TO CONCRETE SUBSTRATE AND TO PREVENT BRUISING OF OTHERWISE SOUND CONCRETE SURFACES. CONCRETE BREAKERS SHALL BE LIMITED TO 15 POUND ELECTRIC STYLE CHIPPING HAMMERS. PROVIDE SHARP TIPS ON BREAKER EQUIPMENT TO MINIMIZE BRUISED SURFACES IN PARTIAL DEPTH REMOVAL. AVOID DIRECTLY STRIKING REINFORCEMENT WITH IMPACT TOOLS USED FOR CONCRETE REMOVAL, CAREFULLY HAND CHIP AROUND SUCH ITEMS. DO NOT CUT OR DAMAGE EXISTING EMBEDDED REINFORCEMENT OR OTHER EMBEDDED ITEMS.

1E) IF DEMOLITION EQUIPMENT OTHER THAN BREAKERS WILL BE USED, SUBMIT ALTERNATIVE METHODS INCLUDING PLANS INDICATING WHERE EACH TYPE OF EQUIPMENT WILL BE USED FOR ENGINEER REVIEW, METHODS MAY INCLUDE BUT ARE NOT LIMITED TO; SAWCUT INTO SMALL PIECES AND LIFT AWAY, HYDRO-DEMOLITION (INCLUDE WASTEWATER CONTROL PLAN), SCARIFYING, AND MILLING.

1F) MAINTAIN ORIGINAL TENDON PROFILE AND SWEEP WITHIN REPAIR AREAS. AT LOCATIONS WHERE UNDERCUTTING IS REQUIRED, REESTABLISH ORIGINAL TENDON PROFILE AND SWEEP PRIOR TO RETENSIONING.

1G) ALL EXCAVATED AREAS SHALL BE SQUARE OR RECTANGULAR IN SHAPE WITH 90° CORNERS. MECHANICALLY ROUGHEN ALL VERTICAL AND HORIZONTAL SURFACES OF THE EXCAVATED AREA TO 1/4" AMPLITUDE (ICRI CSP-9 SURFACE ROUGHNESS).

1H) KEEP ALL REMOVED POST-TENSIONING AND REINFORCING MATERIALS (ANCHORS, STRAND, BARS, ETC.) SEPARATED AND MARKED BY LOCATION FOR ENGINEER REVIEW.

2) SHEATHING AND ENCAPSULATION SYSTEM

2A) PROVIDE FULLY ENCAPSULATED SYSTEM AT ALL REPAIR AREAS WITH WATER-TIGHT TRANSITION TO EXISTING ENCAPSULATION SYSTEM PER PTI GUIDELINES UNLESS NOTED OTHERWISE. SEE SPECIFICATION 030124 - UNBONDED POST-TENSIONING REPAIR.

2B) REPAIR ALL DAMAGED SHEATHING WITHIN REPAIR AREAS AS SHOWN IN THE DETAILS HEREIN AND IN ACCORDANCE WITH SPECIFICATION 030124 - UNBONDED POST-TENSIONING REPAIR.

3) ACCEPTABLE REPAIR PRODUCTS AND MATERIALS

3A) SEE SPECIFICATION 030124 - UNBONDED POST-TENSIONING REPAIR.

3B) ALL POST-TENSIONING DEVICES AND MATERIALS SHALL CONFORM TO REQUIREMENTS OF ACI 423.7-14 SPECIFICATION FOR UNBONDED SINGLE-STRAND TENDON MATERIALS. SUBMIT ALL POST-TENSIONING DEVICES AND MATERIALS FOR REVIEW AND APPROVAL BY ENGINEER.

4) SUBSTITUTIONS:

4A) ALL SUBSTITUTIONS MUST BE APPROVED BY THE ENGINEER PRIOR TO USE. ALTERNATE PRODUCTS MUST MEET OR EXCEED THE PERFORMANCE CRITERIA OF THE SPECIFIED PRODUCTS.

5) PERFORMANCE CRITERIA

5A) REFER TO THE MANUFACTURER'S PRODUCT DATA SHEETS FOR SPECIFIED PRODUCTS.

6) APPLICATION

6A) EXISTING PT TENDONS ARE ASSUMED TO BE 1/2" DIA, 7-WIRE, GRADE 270, STRESS-RELIEVED STRANDS. TENSION TENDON AT STRESSING DEVICE WITH A CALIBRATED HYDRAULIC STRESSING JACK TO A 33.0 KIP INITIAL JACKING FORCE, TO ACHIEVE A FINAL EFFECTIVE FORCE OF 28.9 KIPS AFTER ALL SEATING LOSSES. CONTACT ENGINEER IF EXISTING STRAND DIFFERS FROM THAT ASSUMED IN DESCRIPTION.

6B) ACTUAL STRESSING EQUIPMENT GAUGE PRESSURE USED TO ACHIEVE THE INDICATED JACKING FORCE SHALL BE DETERMINED BASED UPON THE EQUIPMENT CALIBRATION LOG.

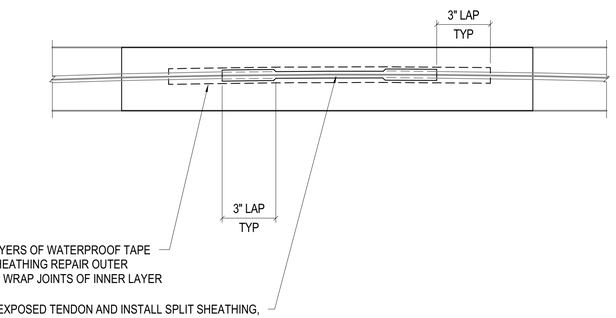

NOTES:
1. REMOVE SECTION OF DAMAGED SHEATHING.
2. UNDERCUT TENDON A MINIMUM OF 3/4" TO WRAP NEW SHEATHING AROUND EXPOSED TENDON. IF TENDON IS NOT DE-TENSIONED AT TIME OF SHEATHING REPAIR, LIMIT LENGTH OF UNDERCUT TENDON TO 3'-0" AT A TIME. DO NOT UNDERCUT ADDITIONAL TENDON LENGTH UNTIL REPAIR MORTAR HAS BEEN INSTALLED AT REPAIRED SHEATHING AREA.
3. CONTRACTOR TO MATCH EXISTING TENDON PROFILE.

12 NO SCALE TENDON SHEATHING REPAIR

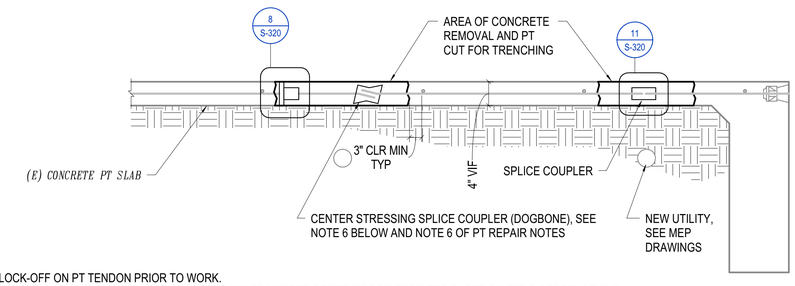

NOTES:
1. INSTALL TEMPORARY LOCK-OFF ON PT TENDON PRIOR TO WORK.
2. MAINTAIN ORIGINAL TENDON PROFILES WITHIN ALL REPAIR AREAS UNLESS NOTED OTHERWISE BY ENGINEER BASED ON FIELD OBSERVATIONS.
3. PERFORM FULL DEPTH CONCRETE REMOVAL PER PT REPAIR NOTES.
4. PROVIDE 12" MINIMUM CLEARANCE BETWEEN END OF COUPLER AND EDGE OF CONCRETE IN DIRECTION OF TENDON ELONGATION DURING STRESSING OR PER ENGINEER DIRECTION BASED ON CALCULATED ELONGATIONS EXPECTED DURING STRESSING.
5. PERFORM SHEATHING REPAIR WHERE SHEATHING IS CUT, DAMAGED, OR REMOVED, SEE 12/S-320 . INSTALL SHEATHING SPLICE AND WATERPROOF TAPE AROUND END OF COUPLER SIMILAR TO SHEATHING REPAIR DETAIL.
6. DO NOT CUT TENDON TAILS OR PLACE BACK CONCRETE AT COUPLERS WITHOUT ENGINEER APPROVAL OF STRAND ELONGATIONS.

6 1" = 1'-0" PT TENDON REPAIR SECTION

STUDIO SW ARCHITECTS
2101 Mountain Road NW Suite B | Albuquerque NM 87104
505-843-9639 | www.studioswarch.com

© 2025 Studio Southwest Architects, Inc. Duplication or reproduction by any means without the express written consent of Studio Southwest Architects, Inc. is a violation of federal and international law. The information contained in this document is the intellectual property of Studio Southwest Architects, Inc. and all rights thereto are reserved.

CONSULTANTS

MARTIN/MARTIN CONSULTING ENGINEERS
6100 Indian School Road NE, Suite 225 | Albuquerque, NM 87110
505.242.4435 martinmartin.com

Architect Engineer

DANIEL MULLINS NEW MEXICO 29362 08/15/2025 PROFESSIONAL ENGINEER

SFS HONDO FIRE STATION EXPANSION

645 OLD LAS VEGAS HIGHWAY SANTA FE, NM 87505

No	Date	Description
Revision Schedule		

ISSUE:	100% CONSTRUCTION DOCUMENTS
PROJECT NUMBER:	25.0149.S.01
FILE:	
DRAWN BY:	EM
CHECKED BY:	JO
DATE:	AUGUST 15, 2025

SHEET TITLE

SLAB REPAIR DETAILS

S-320

DESIGNERS: JIAAN YANG
LEAD REVIT TECH: ELENA MAN
DATE PRINTED: 8/14/2025 2:45:16 PM
FILE PATH: Autodesk Docs://AC-AMI S22/25.0149.S.01 - HONDO FIRE STATION EXPANSION - S25.rvt
MM JOB #: 25.0149.S.01
PRINCIPAL: BENJAMIN DOWNEY
EOR: DAN MULLINS
PROJECT MANAGER: JONATHAN OLTMAN

8/19/2025 11:08:48 AM

C:\Users\mangeles\Documents\2502_SFC Hondo Fire Station_mangeles547K3.rvt

ABBREVIATIONS

AFF	ABOVE FINISHED FLOOR
GA	GAUGE
GYP BD	GYPSUM BOARD
O.C.	ON CENTER
T.O.	TOP OF
MIN.	MINIMUM

SYMBOLS LEGEND

DETAIL DESIGNATION
A1 **DRAWING TITLE**
SCALE: 1/8" = 1'-0"
DRAWING SCALE

NORTH ARROWS

PLAN NORTH | TRUE NORTH | (SURVEYOR'S NORTH IF DIFFERENT FROM PLAN NORTH)

STRUCTURAL GRID

20

PLAN CALLOUT

A1 / A-401 — DETAIL DESIGNATION; SHEET DETAIL IS FOUND ON

ROOM IDENTIFICATION SYMBOL

JANITOR CLOSET / 101 — ROOM NAME; ROOM NUMBER

DOOR IDENTIFICATION SYMBOL

100 — SERIES LETTER; ROOM NUMBER

SECTION SYMBOL

A1 / A-301

WALL TYPE SYMBOL

M8N1

BUILDING SECTION SYMBOL

A1 / A-301

TOILET ACCESSORIES & EQUIPMENT TYPE SYMBOL

TA-01

SECTION DETAIL SYMBOL

A1 / A-501

GLAZING TYPE SYMBOL

A

EXTERIOR ELEVATION DIRECTION SYMBOL

A1 / A-201

SHEET KEYNOTE

12

INTERIOR ELEVATION SYMBOL

A1 — ELEVATION DESIGNATION; DIRECTION OF ELEVATION
A4 / A-401 / A2 — SHEET NUMBER
A3

SPECIFICATION KEYNOTE

09 30 00.01

REVISION NUMBER

1

ELEVATION DATUM SYMBOL

100'-0" — ELEVATION HEIGHT

MATCH LINE
A-101

GENERAL NOTES

A. ALL CONSTRUCTION SHALL COMPLY WITH THE REQUIREMENTS OF THE INTERNATIONAL BUILDING CODE CURRENT ADOPTED EDITION, STATE OF NEW MEXICO BUILDING CODE, AND ALL OTHER GOVERNING CODES AND AGENCIES

B. THE CONTRACTOR SHALL VERIFY ALL DIMENSIONS AND CONDITIONS AT THE SITE PRIOR TO STARTING THE WORK. ANY DISCREPANCIES AND/OR OMISSIONS IN THE CONTRACT DOCUMENTS SHALL BE BROUGHT TO THE ATTENTION OF THE ARCHITECT

C. CONTRACTOR TO REVIEW AND COORDINATE ALL CONTRACT DOCUMENTS

D. CONTRACTOR TO REFER TO ANNOTATIVE DIMENSIONS ONLY - DO NOT SCALE DRAWINGS

E. DIMENSIONS SHOWN ARE TO FACE OF STUD OR FACE OF MASONRY AT EXTERIOR UNLESS OTHERWISE NOTED. FACE OF EXTERIOR STUD LINES UP WITH FACE OF FOUNDATION WALL/SLAB UNLESS NOTED OTHERWISE

F. LARGER SCALE DRAWINGS TAKE PRECEDENCE OVER SMALLER SCALE, TYPICAL

G. ALL REQUIRED EXIT DOORS SHALL BE OPERABLE FROM INSIDE WITHOUT A KEY OR SPECIAL KNOWLEDGE OR EFFORT

H. LATCHING AND LOCKING DOORS THAT ARE HAND ACTIVATED AND WHICH ARE IN A PATH OF TRAVEL SHALL BE OPERABLE WITH A SINGLE EFFORT BY LEVER TYPE HARDWARE DESIGNED TO PROVIDE PASSAGE WITHOUT REQUIRING THE ABILITY TO GRASP THE OPENING HARDWARE

I. MAXIMUM EFFORT TO OPENING ANY DOOR SHALL NOT EXCEED 5 POUNDS PRESSURE FOR INTERIOR NON-RATED DOORS - 8 1/2 POUNDS PRESSURE FOR EXTERIOR DOORS AND 15 POUNDS PRESSURE FOR FIRE-RATED DOORS

J. DOOR THRESHOLDS SHALL BE MAXIMUM OF 1/2 INCH ABOVE ADJACENT FLOOR - THE EXPOSED EDGE SHALL BE BEVELED OR SLOPED TO MAXIMUM 45 DEGREES WITH MAXIMUM 1/4 INCH CHANGE IN VERTICAL ELEVATION

K. THE BOTTOM 10 INCHES OF ALL DOORS SHALL HAVE A SMOOTH UNINTERRUPTED SURFACE TO ALLOW THE DOOR TO BE OPENED BY WHEELCHAIR FOOTREST

L. ALL PRODUCTS MARKED "OR APPROVED EQUAL" SHALL BE APPROVED BY THE ARCHITECT AND OWNER PRIOR TO PURCHASING AND INSTALLATION OF WORK AND SHALL MEET THE REQUIREMENTS OF ALL GOVERNING CODES AND AGENCIES

M. WALL AND CEILING COVERING SHALL COMPLY WITH THE CURRENTLY ADOPTED VERSION OF THE IBC EDITION

N. SUSPENDED CEILING FRAMING SYSTEM AND FIXTURES SHALL BE LATERALLY AND VERTICALLY BRACED AS PER ASTM E580 AND THE CURRENTLY ADOPTED IBC EDITION.

O. EXTERIOR AND INTERIOR GLASS AND GLAZING SHALL MEET THE REQUIREMENTS OF THE CURRENTLY ADOPTED IBC EDITION

P. WALL AND FLOOR COVERINGS AND OTHER DECORATIVE MATERIALS SHALL HAVE A FLAME SPREAD RATING PER THE CURRENTLY ADOPTED IBC EDITION. CERTIFICATION THEREOF SHALL BE PROVIDED . EXITS, EXIT SIGNS, FIRE ALARM STATIONS, HOSE CABINETS, AND EXTINGUISHER LOCATIONS SHALL NOT BE CONCEALED BY DECORATIVE MATERIAL.

Q. FOR ALL MOUNTED EQUIPMENT PROVIDE ALL NECESSARY BLOCKING, AND FRAMING AS RECOMMENDED BY THE MANUFACTURER. REQUIRED SUPPORT SHALL BE INSTALLED BY THE CONTRACTOR.

R. PROJECTIONS OR RECESSES IN SCHEDULED SPACES SHALL HAVE FINISHES AS SCHEDULED FOR RESPECTIVE SPACE IN WHICH THEY OCCUR.

S. ALL PIPING SHALL BE LABELED WITH DIRECTIONAL ARROWS EVERY 20 FEET AND AT ALL WALL PENETRATIONS. ACCESS PANELS SHALL BE PROVIDED AT ALL VALVES AND CONTROLS CONCEALED IN HARD CONSTRUCTION.

T. THESE SYMBOLS, ABBREVIATIONS AND MATERIAL INDICATIONS APPLY TO ARCHITECTURAL SHEETS ONLY.

KEYED NOTES

1	METAL DECK
2	DEFLECTION TRACK, SEE DETAIL C4/A001
3	CEILING AS SCHEDULED
4	5/8" TYPE "X" GYP BD CONTINUOUS TO ROOF DECK
5	3 5/8"x 20GA METAL STUD @ 12" OC
6	BASE, REFER TO FINISHES
7	ACOUSTIC SEALANT
8	TILE OVER 5/8" BACKER
9	8"x 20GA METAL STUD @ 12" OC
10	ACOUSTICAL INSULATION
11	STRUCTURE - REFER TO STRUCTURAL DRAWINGS
12	CONTINUOUS SEALANT, EACH SIDE
13	CONTINUOUS SLOTTED DEFLECTION TRACK
14	GYPSUM BOARD
15	METAL STUD
16	SOUND ATTENUATION BATTS - REFER TO PARTITION TYPE

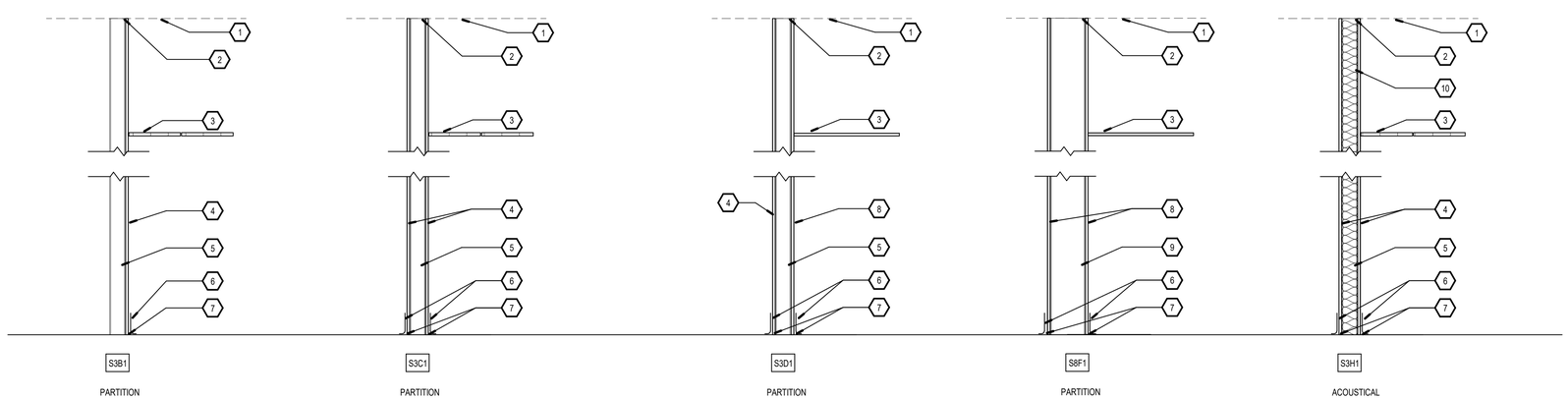

A1 WALL-PARTITION TYPES
3/4" = 1'-0"

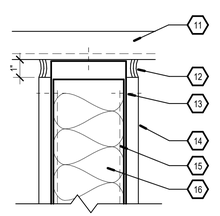

A5 WALL-DEFLECTION TRACK
3" = 1'-0"

STUDIO SW ARCHITECTS
2101 Mountain Road NW Suite B | Albuquerque NM 87104
505-843-9639 | www.studioswarch.com

© 2025 Studio Southwest Architects, Inc. Duplication or reproduction by any means without the express written consent of Studio Southwest Architects, Inc. is a violation of federal and international law. The information contained in this document is the intellectual property of Studio Southwest Architects, Inc. and all rights thereto are reserved.

CONSULTANTS

Architect Engineer

STATE OF NEW MEXICO
LAURA B. ANDERSON
No. 5528
REGISTERED ARCHITECT

SFC HONDO FIRE STATION

645 OLD LAS VEGAS HIGHWAY
SANTA FE, NM 87505



No	Date	Description
		Revision Schedule

ISSUE:	100% CONSTRUCTION DOCUMENTS
PROJECT NUMBER:	2502
FILE:	SSWA_Inc_2025_Template.rte
DRAWN BY:	MA
CHECKED BY:	LA
DATE:	AUGUST 15, 2025

SHEET TITLE

STANDARD ARCH ABBRV SYMBOLS & GEN NOTES

A-001

8/19/2025 11:08:49 AM

C:\Users\mangeles\Documents\2502_SFC Hondo Fire Station_mangeles547K3.rvt

SELECTIVE DEMOLITION

A) DEMOLITION WORK SHALL COMPLY WITH ANSI A10.6 AND NFPA 24.1

B) ALL WORK SHALL COMPLY WITH APPLICABLE CODES AND REGULATIONS. HAZARDOUS WASTE SHALL BE HANDLED AND DISPOSED OF IN COMPLIANCE WITH HAZARDOUS MATERIALS REGULATIONS, REPORTS REGARDING THE PRESENCE OF HAZARDOUS MATERIALS ARE ON FILE AT THE OFFICE OF THE ARCHITECT AND ARE AVAILABLE FOR REVIEW AND USE BY THE CONTRACTOR. THE CONTRACTOR SHALL EXAMINE THE REPORTS AND THE SITE CONDITIONS PRIOR TO COMMENCING THE WORK.

C) ALL DEMOLITION WORK SHALL BE PERFORMED BY PERSONS EXPERIENCED IN DEMOLITION WORK SIMILAR IN NATURE AND EXTENT TO THAT REQUIRED BY THIS PROJECT.

D) DO NOT OBSTRUCT PUBLIC WAYS ADJACENT TO THE PROJECT WITHOUT WRITTEN AUTHORIZATION FROM AUTHORITIES HAVING JURISDICTION. ERECT TEMPORARY BARRICADES, PASSAGEWAYS, OR OTHER PROTECTION AS REQUIRED TO PREVENT INJURY TO PEOPLE AND DAMAGE TO ADJACENT BUILDINGS AND FACILITIES, AND AS REQUIRED BY JURISDICTIONAL AUTHORITIES.

E) PROTECT EXISTING SITEWORK, AND EXISTING BUILDING EXTERIOR CONDITIONS AND FEATURES.

F) PROVIDE AND MAINTAIN SHORING, BRACING, OR STRUCTURAL SUPPORT TO PRESERVE THE STABILITY AND INTEGRITY OF THE EXISTING CONSTRUCTION TO REMAIN, AND AS NECESSARY TO PREVENT THE UNPLANNED COLLAPSE OF THE MATERIALS OF CONSTRUCTION BEING DEMOLISHED.

G) IN THE EVENT THAT UNANTICIPATED CONDITIONS ARE ENCOUNTERED, INCLUDING MECHANICAL, ELECTRICAL, OR STRUCTURAL ELEMENTS THAT CONFLICT WITH THE INTENT OF THE DEMOLITION DRAWINGS, REPORT SUCH CONDITIONS IMMEDIATELY TO THE ARCHITECT, AND DO NOT PROCEED WITH THE AFFECTED WORK UNTIL AUTHORIZED BY THE ARCHITECT.

H) ITEMS TO BE REMOVED SHALL BE DETACHED FROM THE EXISTING CONSTRUCTION EMPLOYING CUTTING AND REMOVAL METHODS THAT ARE LEAST LIKELY TO DAMAGE ADJACENT CONSTRUCTION WHICH IS TO REMAIN.

I) COMPLY WITH THE OWNER REPRESENTATIVE REQUIREMENTS FOR USING AND PROTECTING ELEVATORS, STAIRS, BUILDING ENTRANCES, AND OTHER BUILDING FACILITIES DURING DEMOLITION OPERATIONS.

J) REMOVED ITEMS SHALL BE DISPOSED OF LEGALLY OFF-SITE, UNLESS DESIGNATED TO BE SALVAGED, OR REMOVED AND STORED.

K) ITEMS DESIGNATED TO BE SALVAGED SHALL BE DETACHED FROM THE EXISTING CONSTRUCTION AND DELIVERED TO THE OWNER REPRESENTATIVE. THE OWNER REPRESENTATIVE IS ENTITLED TO SALVAGE AND/OR REMOVE EQUIPMENT, HARDWARE, FIXTURES, AND FURNISHINGS FROM ALL AREAS OF THIS CONTRACT PRIOR TO DEMOLITION.

L) MAINTAIN EXISTING UTILITY SERVICES AND FIRE PROTECTION FACILITIES, AND PROTECT THEM FROM DAMAGE DURING THE DEMOLITION OPERATIONS. INTERRUPTIONS OF UTILITIES TO THE BUILDING SHALL BE COORDINATED WITH THE OWNER REPRESENTATIVE.

M) TEMPORARILY SHUT OFF UTILITIES TO SELECTED PORTIONS OF THE BUILDING AS REQUIRED BY DEMOLITION OPERATIONS. CAP, VALVE, PLUG, OR SEAL ENDS OF PIPING AND CONDUIT REQUIRED TO BE CUT-OFF OR DISCONNECTED BY THE DEMOLITION WORK. MAINTAIN CONTINUITY OF UTILITIES TO OTHER PORTIONS OF THE BUILDING.

N) MAINTAIN ALL FIRE EXITS DURING CONSTRUCTION.

O) COMPLY WITH THE FOLLOWING DUST CONTROL MEASURES:
1. GENERAL:
   a) ISOLATE THE WORK AREA FOR THE DURATION OF THE WORK BY COMPLETELY SEALING OFF ALL OPENINGS AND FIXTURES IN THE WORK AREA, INCLUDING BUT NOT LIMITED TO, HEATING AND VENTILATING DUCTS, DOORWAYS, CORRIDORS, WINDOWS, AND LIGHTING WITH PLASTIC SHEETING TAPED SECURELY IN PLACE.
   b) BUILD DOUBLE BARRIERS OF PLASTIC SHEETING AT ALL ENTRANCES AND EXITS TO THE WORK AREA SO THAT THE WORK AREA IS ALWAYS CLOSED OFF BY ONE BARRIER WHEN WORKERS ENTER OR EXIT.
2. PROTECTION:
   a) COVER ALL FLOORS AND WALL SURFACES IN THE WORK AREA WITH PLASTIC SHEETING TAPED SECURELY IN PLACE TO PROTECT FROM DAMAGE.
   b) BEFORE WORK IS BEGUN, REMOVE ALL REMOVEABLE ITEMS AND EQUIPMENT FROM THE WORK AREA AND STORE AS DIRECTED.
   c) COVER ALL NON-REMOVEABLE ITEMS AND EQUIPMENT IN THE WORK AREA WITH PLASTIC SHEETING TAPED SECURELY IN PLACE.
   d) REMOVE ALL HEATING, VENTILATION, AND AIR-CONDITIONING SYSTEM FILTERS, PACK THEM IN SEALABLE PLASTIC BAGS (6-MIL MINIMUM) FOR DISPOSAL IN THE APPROVED WASTE DISPOSAL SITE AND REPLACE THEM WITH NEW FILTERS.
3. POST WARNING SIGNS AND LABELS AS REQUIRED BY 29 CFR 1910.1001, ASTM E 849.

P) MAINTAIN ALL FIRE EXITS DURING CONSTRUCTION.

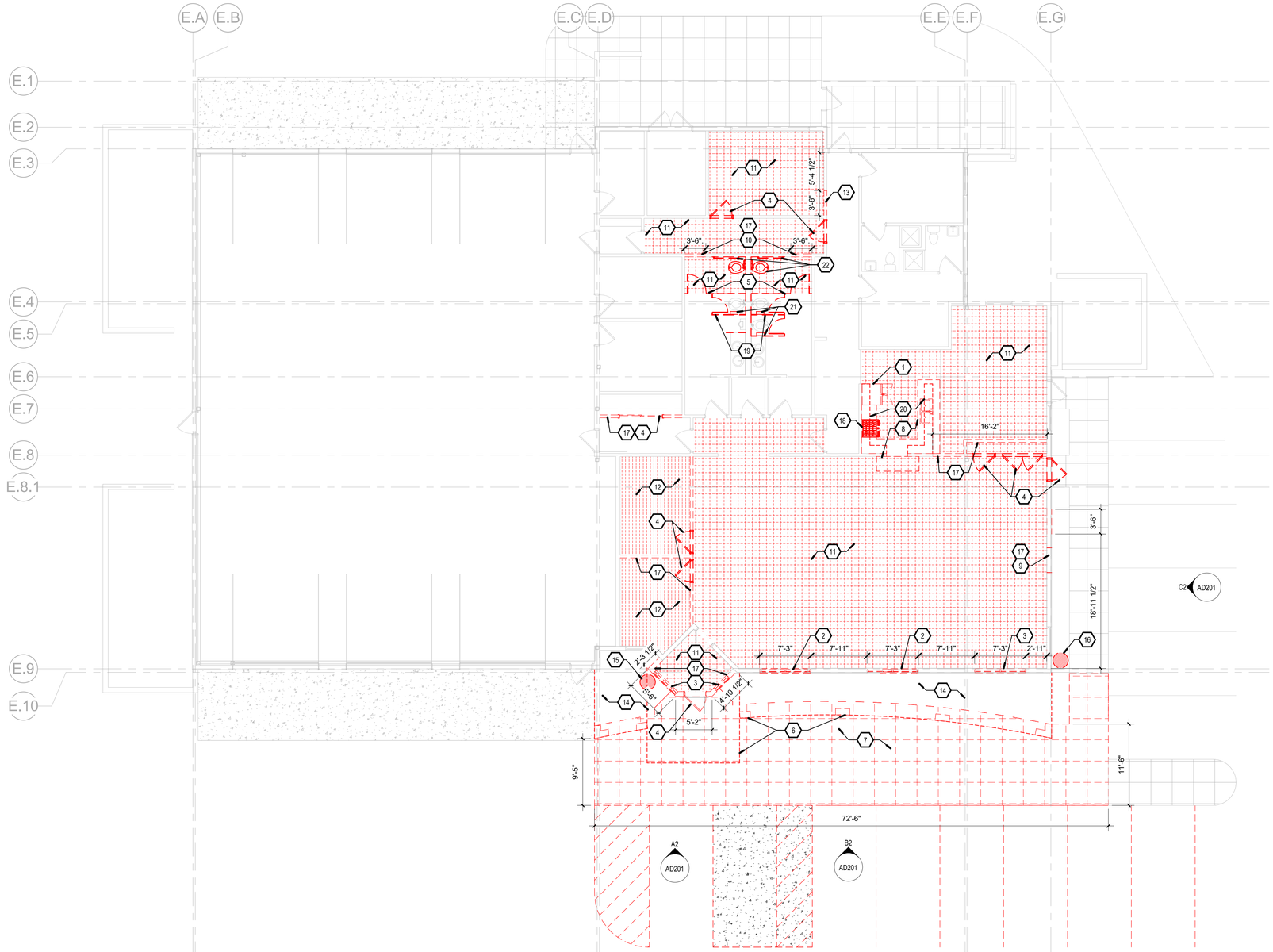

A1 FIRST FLOOR DEMOLITION PLAN
1/8" = 1'-0"

GENERAL NOTES

A) COORDINATE WITH MECHANICAL, ELECTRICAL & PLUMBING.

B) ALL ITEMS LISTED FOR DEMOLITION SHALL BE REMOVED IN THEIR ENTIRETY, THE OWNER HAS FIRST RIGHT OF REFUSAL.

C) COORDINATE ANY SLAB DEMOLISHING/TRENCHING WITH STRUCTURAL FOR POST TENSIONING CABLE LOCATIONS.

KEYED NOTES

1 REMOVE EXISTING FRIDGE. SALVAGE TO OWNER.
2 REMOVE EXISTING WINDOW, SALVAGE TO OWNER. FURTHER, REMOVE A PORTION OF THE WALL BELOW THE EXISTING WINDOW FOR THE NEW DOOR. COORDINATE THE NEW DOOR OPENING WIDTH WITH THE NEW DOOR SCHEDULE ON SHEET A-601, AND LOCATION ON SHEET A-101A.
3 REMOVE EXISTING WINDOW, SALVAGE TO OWNER.
4 REMOVE EXISTING DOOR AND FRAME.
5 REMOVE EXISTING TOILET STALL PARTITION.
6 REMOVE EXTERIOR SHADE STRUCTURE.
7 PORTION OF EXISTING SIDEWALK TO BE DEMOLISHED.
8 REMOVE EXISTING CASEWORK AND COUNTER.
9 NEW OPENING FOR WINDOW. REFER TO THE NEW WINDOW ON A1/A-601 FOR THE HEIGHT, WIDTH, AND LOCATION OF THE NEW WINDOW.
10 NEW OPENING FOR SHOWER.
11 REMOVE EXISTING CERAMIC TILE.
12 REMOVE EXISTING CARPET TILE.
13 NEW DOOR OPENING. REFER TO THE NEW DOOR ON SHEET A-101A AND A-601 FOR THE HEIGHT AND WIDTH OF THE NEW WINDOW.
14 REMOVE EXISTING LANDSCAPING.
15 REMOVE EXISTING CATCH BASIN.
16 EXISTING CATCH BASIN TO REMAIN. REFER TO CIVIL SHEET C-001.
17 REMOVE PORTION OF WALL INDICATED.
18 PROTECT AND REMOVE EXISTING STOVE DURING DEMOLITION. REINSTALL DURING CONSTRUCTION.
19 PROTECT AND REMOVE STALL PARTITIONS DURING DEMOLITION. REINSTALL DURING CONSTRUCTION.
20 REMOVE OVERHEAD CABINETS.
21 PROTECT AND REMOVE STALL EQUIPMENT DURING DEMOLITION. REINSTALL DURING CONSTRUCTION.
22 PROTECT AND REMOVE TOILET AND GRAB BARS DURING DEMOLITION. REINSTALL DURING CONSTRUCTION.

LEGEND

EXISTING CONSTRUCTION TO REMAIN.

EXISTING CONSTRUCTION TO BE DEMOLISHED.

EXISTING FLOOR FINISH TO BE REMOVED.

EXISTING DOOR TO REMAIN.

EXISTING DOOR TO BE DEMOLISHED.

STUDIO SW ARCHITECTS
2101 Mountain Road NW Suite B | Albuquerque NM 87104
505-843-9639 | www.studioswarch.com

© 2025 Studio Southwest Architects, Inc. Duplication or reproduction by any means without the express written consent of Studio Southwest Architects, Inc. is a violation of federal and international law. The information contained in this document is the intellectual property of Studio Southwest Architects, Inc. and all rights thereto are reserved.

CONSULTANTS

Architect Engineer

STATE OF NEW MEXICO
LAURA B. ANDERSON
No. 5528
REGISTERED ARCHITECT

SFC HONDO FIRE STATION

645 OLD LAS VEGAS HIGHWAY
SANTA FE, NM 87505

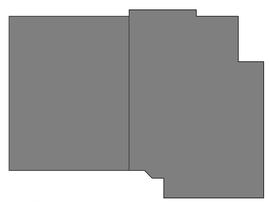

Key Plan NTS

No	Date	Description
Revision Schedule		

ISSUE:	100% CONSTRUCTION DOCUMENTS
PROJECT NUMBER:	2502
FILE:	SSWA_Inc_2025_Template.rte
DRAWN BY:	MA
CHECKED BY:	LA
DATE:	AUGUST 15, 2025

SHEET TITLE

FIRST FLOOR DEMOLITION PLAN

AD101

8/19/2025 11:08:50 AM

C:\Users\mangeles\Documents\2502_SFC Hondo Fire Station_mangeles547K3.rvt

SELECTIVE DEMOLITION

A) DEMOLITION WORK SHALL COMPLY WITH ANSI A10.6 AND NFPA 24.1

B) ALL WORK SHALL COMPLY WITH APPLICABLE CODES AND REGULATIONS. HAZARDOUS WASTE SHALL BE HANDLED AND DISPOSED OF IN COMPLIANCE WITH HAZARDOUS MATERIALS REGULATIONS, REPORTS REGARDING THE PRESENCE OF HAZARDOUS MATERIALS ARE ON FILE AT THE OFFICE OF THE ARCHITECT AND ARE AVAILABLE FOR REVIEW AND USE BY THE CONTRACTOR. THE CONTRACTOR SHALL EXAMINE THE REPORTS AND THE SITE CONDITIONS PRIOR TO COMMENCING THE WORK.

C) ALL DEMOLITION WORK SHALL BE PERFORMED BY PERSONS EXPERIENCED IN DEMOLITION WORK SIMILAR IN NATURE AND EXTENT TO THAT REQUIRED BY THIS PROJECT.

D) DO NOT OBSTRUCT PUBLIC WAYS ADJACENT TO THE PROJECT WITHOUT WRITTEN AUTHORIZATION FROM AUTHORITIES HAVING JURISDICTION. ERECT TEMPORARY BARRICADES, PASSAGEWAYS, OR OTHER PROTECTION AS REQUIRED TO PREVENT INJURY TO PEOPLE AND DAMAGE TO ADJACENT BUILDINGS AND FACILITIES, AND AS REQUIRED BY JURISDICTIONAL AUTHORITIES.

E) PROTECT EXISTING SITEWORK, AND EXISTING BUILDING EXTERIOR CONDITIONS AND FEATURES.

F) PROVIDE AND MAINTAIN SHORING, BRACING, OR STRUCTURAL SUPPORT TO PRESERVE THE STABILITY AND INTEGRITY OF THE EXISTING CONSTRUCTION TO REMAIN, AND AS NECESSARY TO PREVENT THE UNPLANNED COLLAPSE OF THE MATERIALS OF CONSTRUCTION BEING DEMOLISHED.

G) IN THE EVENT THAT UNANTICIPATED CONDITIONS ARE ENCOUNTERED, INCLUDING MECHANICAL, ELECTRICAL, OR STRUCTURAL ELEMENTS THAT CONFLICT WITH THE INTENT OF THE DEMOLITION DRAWINGS, REPORT SUCH CONDITIONS IMMEDIATELY TO THE ARCHITECT, AND DO NOT PROCEED WITH THE AFFECTED WORK UNTIL AUTHORIZED BY THE ARCHITECT.

H) ITEMS TO BE REMOVED SHALL BE DETACHED FROM THE EXISTING CONSTRUCTION EMPLOYING CUTTING AND REMOVAL METHODS THAT ARE LEAST LIKELY TO DAMAGE ADJACENT CONSTRUCTION WHICH IS TO REMAIN.

I) COMPLY WITH THE OWNER REPRESENTATIVE REQUIREMENTS FOR USING AND PROTECTING ELEVATORS, STAIRS, BUILDING ENTRANCES, AND OTHER BUILDING FACILITIES DURING DEMOLITION OPERATIONS.

J) REMOVED ITEMS SHALL BE DISPOSED OF LEGALLY OFF-SITE, UNLESS DESIGNATED TO BE SALVAGED, OR REMOVED AND STORED.

K) ITEMS DESIGNATED TO BE SALVAGED SHALL BE DETACHED FROM THE EXISTING CONSTRUCTION AND DELIVERED TO THE OWNER REPRESENTATIVE. THE OWNER REPRESENTATIVE IS ENTITLED TO SALVAGE AND/OR REMOVE EQUIPMENT, HARDWARE, FIXTURES, AND FURNISHINGS FROM ALL AREAS OF THIS CONTRACT PRIOR TO DEMOLITION.

L) MAINTAIN EXISTING UTILITY SERVICES AND FIRE PROTECTION FACILITIES, AND PROTECT THEM FROM DAMAGE DURING THE DEMOLITION OPERATIONS. INTERRUPTIONS OF UTILITIES TO THE BUILDING SHALL BE COORDINATED WITH THE OWNER REPRESENTATIVE.

M) TEMPORARILY SHUT OFF UTILITIES TO SELECTED PORTIONS OF THE BUILDING AS REQUIRED BY DEMOLITION OPERATIONS. CAP, VALVE, PLUG, OR SEAL ENDS OF PIPING AND CONDUIT REQUIRED TO BE CUT-OFF OR DISCONNECTED BY THE DEMOLITION WORK. MAINTAIN CONTINUITY OF UTILITIES TO OTHER PORTIONS OF THE BUILDING.

N) MAINTAIN ALL FIRE EXITS DURING CONSTRUCTION.

O) COMPLY WITH THE FOLLOWING DUST CONTROL MEASURES:

1. GENERAL:
   a) ISOLATE THE WORK AREA FOR THE DURATION OF THE WORK BY COMPLETELY SEALING OFF ALL OPENINGS AND FIXTURES IN THE WORK AREA, INCLUDING BUT NOT LIMITED TO, HEATING AND VENTILATING DUCTS, DOORWAYS, CORRIDORS, WINDOWS, AND LIGHTING WITH PLASTIC SHEETING TAPED SECURELY IN PLACE.
   b) BUILD DOUBLE BARRIERS OF PLASTIC SHEETING AT ALL ENTRANCES AND EXITS TO THE WORK AREA SO THAT THE WORK AREA IS ALWAYS CLOSED OFF BY ONE BARRIER WHEN WORKERS ENTER OR EXIT.
2. PROTECTION:
   a) COVER ALL FLOORS AND WALL SURFACES IN THE WORK AREA WITH PLASTIC SHEETING TAPED SECURELY IN PLACE TO PROTECT FROM DAMAGE.
   b) BEFORE WORK IS BEGUN, REMOVE ALL REMOVEABLE ITEMS AND EQUIPMENT FROM THE WORK AREA AND STORE AS DIRECTED.
   c) COVER ALL NON-REMOVEABLE ITEMS AND EQUIPMENT IN THE WORK AREA WITH PLASTIC SHEETING TAPED SECURELY IN PLACE.
   d) REMOVE ALL HEATING, VENTILATION, AND AIR-CONDITIONING SYSTEM FILTERS, PACK THEM IN SEALABLE PLASTIC BAGS (6-MIL MINIMUM) FOR DISPOSAL IN THE APPROVED WASTE DISPOSAL SITE AND REPLACE THEM WITH NEW FILTERS.
3. POST WARNING SIGNS AND LABELS AS REQUIRED BY 29 CFR 1910.1001, ASTM E 849.

P) MAINTAIN ALL FIRE EXITS DURING CONSTRUCTION.

GENERAL NOTES

A) COORDINATE WITH MECHANICAL, ELECTRICAL & PLUMBING.

B) ALL ITEMS LISTED FOR DEMOLITION SHALL BE REMOVED IN THEIR ENTIRETY, THE OWNER HAS FIRST RIGHT OF REFUSAL.

KEYED NOTES

1 REMOVE EXTERIOR SHADE STRUCTURE IN IT'S ENTIRETY.
2 DEMOLISH EXISTING GYP CEILING.
3 DEMOLISH EXISTING LAY-IN CEILING.
4 DEMOLISH EXISTING SOFFIT.

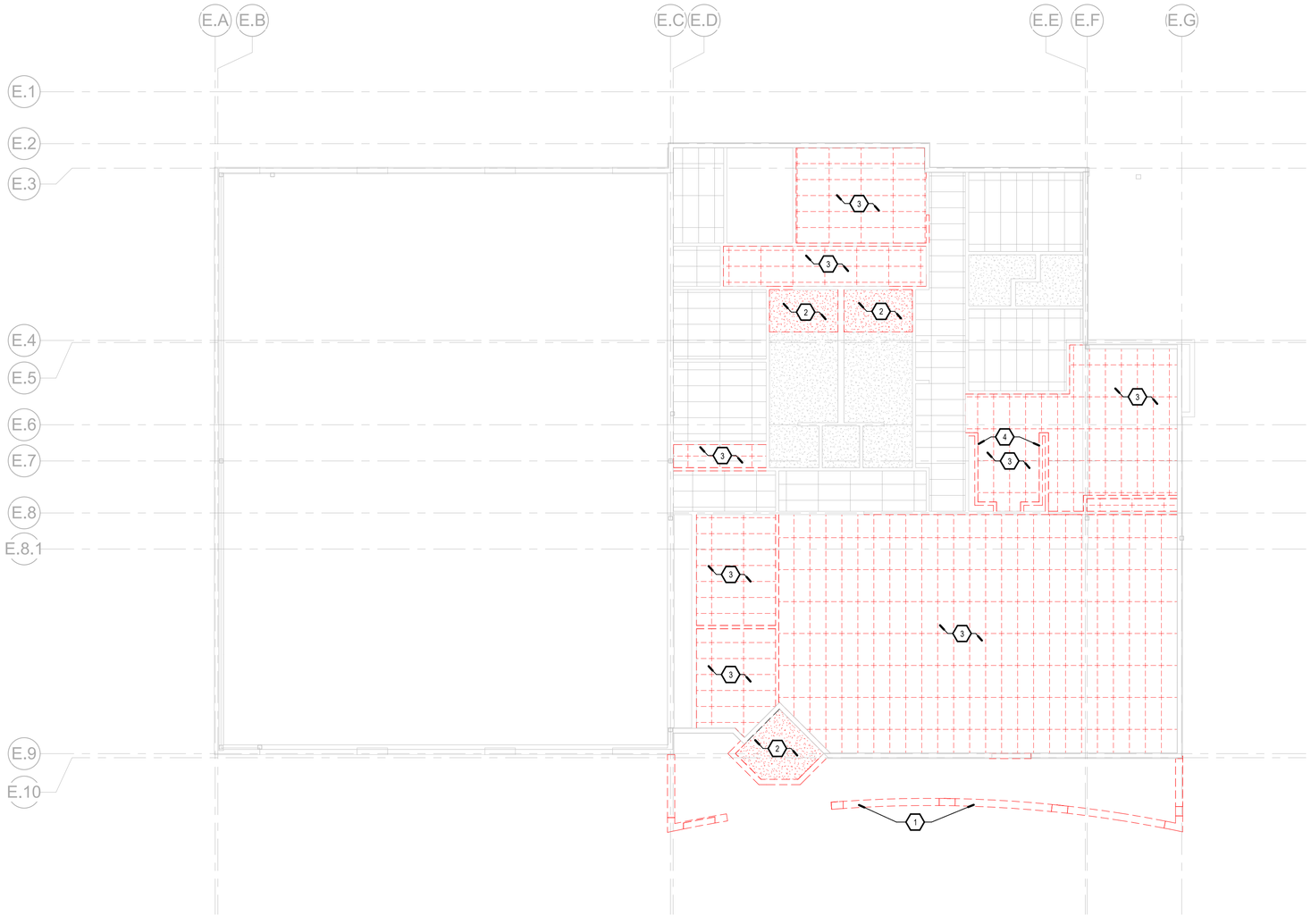

A1 FIRST FLOOR REFLECTED DEMOLITION CEILING PLAN
1/8" = 1'-0"

LEGEND

2x4 LAY-IN CEILING TO BE DEMOLISHED

GYPSUM BOARD CEILING TO BE DEMOLISHED

2x4 LAY-IN CEILING TO REMAIN

EXISTING CONSTRUCTION TO REMAIN.

EXISTING CONSTRUCTION TO BE DEMOLISHED.

STUDIO SW ARCHITECTS
2101 Mountain Road NW Suite B | Albuquerque NM 87104
505-843-9639 | www.studioswarch.com

© 2025 Studio Southwest Architects, Inc. Duplication or reproduction by any means without the express written consent of Studio Southwest Architects, Inc. is a violation of federal and international law. The information contained in this document is the intellectual property of Studio Southwest Architects, Inc. and all rights thereto are reserved.

CONSULTANTS

Architect Engineer

STATE OF NEW MEXICO
LAURA B. ANDERSON
No. 5528
REGISTERED ARCHITECT

SFC HONDO FIRE STATION

645 OLD LAS VEGAS HIGHWAY
SANTA FE, NM 87505

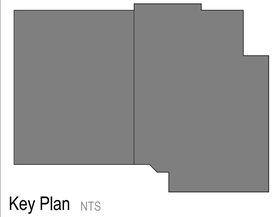

Key Plan NTS

No	Date	Description
Revision Schedule		

ISSUE:	100% CONSTRUCTION DOCUMENTS
PROJECT NUMBER:	2502
FILE:	SSWA_Inc_2025_Template.rte
DRAWN BY:	MA
CHECKED BY:	LA
DATE:	AUGUST 15, 2025

SHEET TITLE

FIRST FLOOR REFLECTED DEMOLITION CEILING PLAN

AD111

8/19/2025 11:08:50 AM

C:\Users\mangeles\Documents\2502_SFC Hondo Fire Station_mangeles547K3.rvt

SELECTIVE DEMOLITION

A) DEMOLITION WORK SHALL COMPLY WITH ANSI A10.6 AND NFPA 24.1

B) ALL WORK SHALL COMPLY WITH APPLICABLE CODES AND REGULATIONS. HAZARDOUS WASTE SHALL BE HANDLED AND DISPOSED OF IN COMPLIANCE WITH HAZARDOUS MATERIALS REGULATIONS, REPORTS REGARDING THE PRESENCE OF HAZARDOUS MATERIALS ARE ON FILE AT THE OFFICE OF THE ARCHITECT AND ARE AVAILABLE FOR REVIEW AND USE BY THE CONTRACTOR. THE CONTRACTOR SHALL EXAMINE THE REPORTS AND THE SITE CONDITIONS PRIOR TO COMMENCING THE WORK.

C) ALL DEMOLITION WORK SHALL BE PERFORMED BY PERSONS EXPERIENCED IN DEMOLITION WORK SIMILAR IN NATURE AND EXTENT TO THAT REQUIRED BY THIS PROJECT.

D) DO NOT OBSTRUCT PUBLIC WAYS ADJACENT TO THE PROJECT WITHOUT WRITTEN AUTHORIZATION FROM AUTHORITIES HAVING JURISDICTION. ERECT TEMPORARY BARRICADES, PASSAGEWAYS, OR OTHER PROTECTION AS REQUIRED TO PREVENT INJURY TO PEOPLE AND DAMAGE TO ADJACENT BUILDINGS AND FACILITIES, AND AS REQUIRED BY JURISDICTIONAL AUTHORITIES.

E) PROTECT EXISTING SITEWORK, AND EXISTING BUILDING EXTERIOR CONDITIONS AND FEATURES.

F) PROVIDE AND MAINTAIN SHORING, BRACING, OR STRUCTURAL SUPPORT TO PRESERVE THE STABILITY AND INTEGRITY OF THE EXISTING CONSTRUCTION TO REMAIN, AND AS NECESSARY TO PREVENT THE UNPLANNED COLLAPSE OF THE MATERIALS OF CONSTRUCTION BEING DEMOLISHED.

G) IN THE EVENT THAT UNANTICIPATED CONDITIONS ARE ENCOUNTERED, INCLUDING MECHANICAL, ELECTRICAL, OR STRUCTURAL ELEMENTS THAT CONFLICT WITH THE INTENT OF THE DEMOLITION DRAWINGS, REPORT SUCH CONDITIONS IMMEDIATELY TO THE ARCHITECT, AND DO NOT PROCEED WITH THE AFFECTED WORK UNTIL AUTHORIZED BY THE ARCHITECT.

H) ITEMS TO BE REMOVED SHALL BE DETACHED FROM THE EXISTING CONSTRUCTION EMPLOYING CUTTING AND REMOVAL METHODS THAT ARE LEAST LIKELY TO DAMAGE ADJACENT CONSTRUCTION WHICH IS TO REMAIN.

I) COMPLY WITH THE OWNER REPRESENTATIVE REQUIREMENTS FOR USING AND PROTECTING ELEVATORS, STAIRS, BUILDING ENTRANCES, AND OTHER BUILDING FACILITIES DURING DEMOLITION OPERATIONS.

J) REMOVED ITEMS SHALL BE DISPOSED OF LEGALLY OFF-SITE, UNLESS DESIGNATED TO BE SALVAGED, OR REMOVED AND STORED.

K) ITEMS DESIGNATED TO BE SALVAGED SHALL BE DETACHED FROM THE EXISTING CONSTRUCTION AND DELIVERED TO THE OWNER REPRESENTATIVE. THE OWNER REPRESENTATIVE IS ENTITLED TO SALVAGE AND/OR REMOVE EQUIPMENT, HARDWARE, FIXTURES, AND FURNISHINGS FROM ALL AREAS OF THIS CONTRACT PRIOR TO DEMOLITION.

L) MAINTAIN EXISTING UTILITY SERVICES AND FIRE PROTECTION FACILITIES, AND PROTECT THEM FROM DAMAGE DURING THE DEMOLITION OPERATIONS. INTERRUPTIONS OF UTILITIES TO THE BUILDING SHALL BE COORDINATED WITH THE OWNER REPRESENTATIVE.

M) TEMPORARILY SHUT OFF UTILITIES TO SELECTED PORTIONS OF THE BUILDING AS REQUIRED BY DEMOLITION OPERATIONS. CAP, VALVE, PLUG, OR SEAL ENDS OF PIPING AND CONDUIT REQUIRED TO BE CUT-OFF OR DISCONNECTED BY THE DEMOLITION WORK. MAINTAIN CONTINUITY OF UTILITIES TO OTHER PORTIONS OF THE BUILDING.

N) MAINTAIN ALL FIRE EXITS DURING CONSTRUCTION.

O) COMPLY WITH THE FOLLOWING DUST CONTROL MEASURES:
1. GENERAL:
   a) ISOLATE THE WORK AREA FOR THE DURATION OF THE WORK BY COMPLETELY SEALING OFF ALL OPENINGS AND FIXTURES IN THE WORK AREA, INCLUDING BUT NOT LIMITED TO, HEATING AND VENTILATING DUCTS, DOORWAYS, CORRIDORS, WINDOWS, AND LIGHTING WITH PLASTIC SHEETING TAPED SECURELY IN PLACE.
   b) BUILD DOUBLE BARRIERS OF PLASTIC SHEETING AT ALL ENTRANCES AND EXITS TO THE WORK AREA SO THAT THE WORK AREA IS ALWAYS CLOSED OFF BY ONE BARRIER WHEN WORKERS ENTER OR EXIT.
2. PROTECTION:
   a) COVER ALL FLOORS AND WALL SURFACES IN THE WORK AREA WITH PLASTIC SHEETING TAPED SECURELY IN PLACE TO PROTECT FROM DAMAGE.
   b) BEFORE WORK IS BEGUN, REMOVE ALL REMOVEABLE ITEMS AND EQUIPMENT FROM THE WORK AREA AND STORE AS DIRECTED.
   c) COVER ALL NON-REMOVEABLE ITEMS AND EQUIPMENT IN THE WORK AREA WITH PLASTIC SHEETING TAPED SECURELY IN PLACE.
   d) REMOVE ALL HEATING, VENTILATION, AND AIR-CONDITIONING SYSTEM FILTERS, PACK THEM IN SEALABLE PLASTIC BAGS (6-MIL MINIMUM) FOR DISPOSAL IN THE APPROVED WASTE DISPOSAL SITE AND REPLACE THEM WITH NEW FILTERS.
3. POST WARNING SIGNS AND LABELS AS REQUIRED BY 29 CFR 1910.1001, ASTM E 849.

P) MAINTAIN ALL FIRE EXITS DURING CONSTRUCTION.

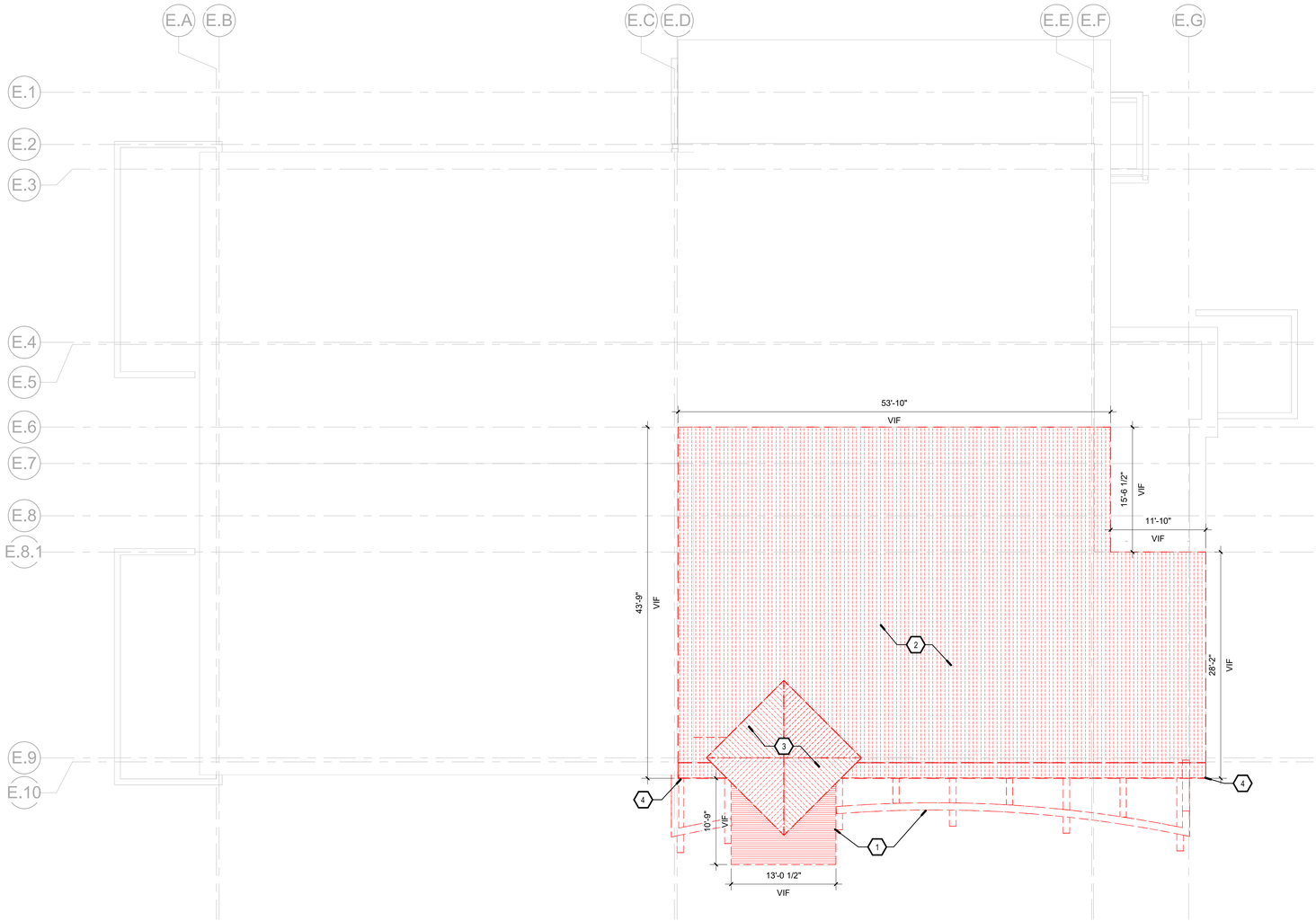

A1 DEMOLITION ROOF PLAN
1/8" = 1'-0"

GENERAL NOTES

A) COORDINATE WITH MECHANICAL, ELECTRICAL & PLUMBING.

B) ALL ITEMS LISTED FOR DEMOLITION SHALL BE REMOVED IN THEIR ENTIRETY, THE OWNER HAS FIRST RIGHT OF REFUSAL.

KEYED NOTES

1 REMOVE EXTERIOR SHADE STRUCTURE.
2 REMOVE EXISING METAL ROOF.
3 REMOVE EXISTING ROOF IN IT'S ENTIRETY.
4 REMOVE FULL EXTENTS OF EXISTING EAVES.

LEGEND

EXISTING CONSTRUCTION TO REMAIN.

EXISTING CONSTRUCTION TO BE DEMOLISHED.

EXISTING ROOF FINISH TO BE REMOVED.

STUDIO SW ARCHITECTS
2101 Mountain Road NW Suite B | Albuquerque NM 87104
505-843-9639 | www.studioswarch.com

© 2025 Studio Southwest Architects, Inc. Duplication or reproduction by any means without the express written consent of Studio Southwest Architects, Inc. is a violation of federal and international law. The information contained in this document is the intellectual property of Studio Southwest Architects, Inc. and all rights thereto are reserved.

CONSULTANTS

Architect Engineer

STATE OF NEW MEXICO
LAURA B. ANDERSON
No. 5528
REGISTERED ARCHITECT

SFC HONDO FIRE STATION

645 OLD LAS VEGAS HIGHWAY
SANTA FE, NM 87505

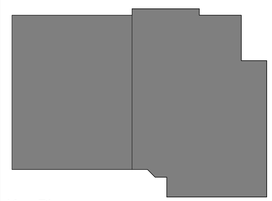

Key Plan NTS

No	Date	Description
Revision Schedule		

ISSUE:	100% CONSTRUCTION DOCUMENTS
PROJECT NUMBER:	2502
FILE:	SSWA_Inc_2025_Template.rte
DRAWN BY:	MA
CHECKED BY:	LA
DATE:	AUGUST 15, 2025

SHEET TITLE

DEMOLITION PLAN

AD121

8/19/2025 11:08:51 AM

C:\Users\mangeles\Documents\2502_SFC Hondo Fire Station_mangeles547K3.rvt

SELECTIVE DEMOLITION

A) DEMOLITION WORK SHALL COMPLY WITH ANSI A10.6 AND NFPA 24.1

B) ALL WORK SHALL COMPLY WITH APPLICABLE CODES AND REGULATIONS. HAZARDOUS WASTE SHALL BE HANDLED AND DISPOSED OF IN COMPLIANCE WITH HAZARDOUS MATERIALS REGULATIONS, REPORTS REGARDING THE PRESENCE OF HAZARDOUS MATERIALS ARE ON FILE AT THE OFFICE OF THE ARCHITECT AND ARE AVAILABLE FOR REVIEW AND USE BY THE CONTRACTOR. THE CONTRACTOR SHALL EXAMINE THE REPORTS AND THE SITE CONDITIONS PRIOR TO COMMENCING THE WORK.

C) ALL DEMOLITION WORK SHALL BE PERFORMED BY PERSONS EXPERIENCED IN DEMOLITION WORK SIMILAR IN NATURE AND EXTENT TO THAT REQUIRED BY THIS PROJECT.

D) DO NOT OBSTRUCT PUBLIC WAYS ADJACENT TO THE PROJECT WITHOUT WRITTEN AUTHORIZATION FROM AUTHORITIES HAVING JURISDICTION. ERECT TEMPORARY BARRICADES, PASSAGEWAYS, OR OTHER PROTECTION AS REQUIRED TO PREVENT INJURY TO PEOPLE AND DAMAGE TO ADJACENT BUILDINGS AND FACILITIES, AND AS REQUIRED BY JURISDICTIONAL AUTHORITIES.

E) PROTECT EXISTING SITEWORK, AND EXISTING BUILDING EXTERIOR CONDITIONS AND FEATURES.

F) PROVIDE AND MAINTAIN SHORING, BRACING, OR STRUCTURAL SUPPORT TO PRESERVE THE STABILITY AND INTEGRITY OF THE EXISTING CONSTRUCTION TO REMAIN, AND AS NECESSARY TO PREVENT THE UNPLANNED COLLAPSE OF THE MATERIALS OF CONSTRUCTION BEING DEMOLISHED.

G) IN THE EVENT THAT UNANTICIPATED CONDITIONS ARE ENCOUNTERED, INCLUDING MECHANICAL, ELECTRICAL, OR STRUCTURAL ELEMENTS THAT CONFLICT WITH THE INTENT OF THE DEMOLITION DRAWINGS, REPORT SUCH CONDITIONS IMMEDIATELY TO THE ARCHITECT, AND DO NOT PROCEED WITH THE AFFECTED WORK UNTIL AUTHORIZED BY THE ARCHITECT.

H) ITEMS TO BE REMOVED SHALL BE DETACHED FROM THE EXISTING CONSTRUCTION EMPLOYING CUTTING AND REMOVAL METHODS THAT ARE LEAST LIKELY TO DAMAGE ADJACENT CONSTRUCTION WHICH IS TO REMAIN.

I) COMPLY WITH THE OWNER REPRESENTATIVE REQUIREMENTS FOR USING AND PROTECTING ELEVATORS, STAIRS, BUILDING ENTRANCES, AND OTHER BUILDING FACILITIES DURING DEMOLITION OPERATIONS.

J) REMOVED ITEMS SHALL BE DISPOSED OF LEGALLY OFF-SITE, UNLESS DESIGNATED TO BE SALVAGED, OR REMOVED AND STORED.

K) ITEMS DESIGNATED TO BE SALVAGED SHALL BE DETACHED FROM THE EXISTING CONSTRUCTION AND DELIVERED TO THE OWNER REPRESENTATIVE. THE OWNER REPRESENTATIVE IS ENTITLED TO SALVAGE AND/OR REMOVE EQUIPMENT, HARDWARE, FIXTURES, AND FURNISHINGS FROM ALL AREAS OF THIS CONTRACT PRIOR TO DEMOLITION.

L) MAINTAIN EXISTING UTILITY SERVICES AND FIRE PROTECTION FACILITIES, AND PROTECT THEM FROM DAMAGE DURING THE DEMOLITION OPERATIONS. INTERRUPTIONS OF UTILITIES TO THE BUILDING SHALL BE COORDINATED WITH THE OWNER REPRESENTATIVE.

M) TEMPORARILY SHUT OFF UTILITIES TO SELECTED PORTIONS OF THE BUILDING AS REQUIRED BY DEMOLITION OPERATIONS. CAP, VALVE, PLUG, OR SEAL ENDS OF PIPING AND CONDUIT REQUIRED TO BE CUT-OFF OR DISCONNECTED BY THE DEMOLITION WORK. MAINTAIN CONTINUITY OF UTILITIES TO OTHER PORTIONS OF THE BUILDING.

N) MAINTAIN ALL FIRE EXITS DURING CONSTRUCTION.

O) COMPLY WITH THE FOLLOWING DUST CONTROL MEASURES:
1. GENERAL:
   a) ISOLATE THE WORK AREA FOR THE DURATION OF THE WORK BY COMPLETELY SEALING OFF ALL OPENINGS AND FIXTURES IN THE WORK AREA, INCLUDING BUT NOT LIMITED TO, HEATING AND VENTILATING DUCTS, DOORWAYS, CORRIDORS, WINDOWS, AND LIGHTING WITH PLASTIC SHEETING TAPED SECURELY IN PLACE.
   b) BUILD DOUBLE BARRIERS OF PLASTIC SHEETING AT ALL ENTRANCES AND EXITS TO THE WORK AREA SO THAT THE WORK AREA IS ALWAYS CLOSED OFF BY ONE BARRIER WHEN WORKERS ENTER OR EXIT.
2. PROTECTION:
   a) COVER ALL FLOORS AND WALL SURFACES IN THE WORK AREA WITH PLASTIC SHEETING TAPED SECURELY IN PLACE TO PROTECT FROM DAMAGE.
   b) BEFORE WORK IS BEGUN, REMOVE ALL REMOVEABLE ITEMS AND EQUIPMENT FROM THE WORK AREA AND STORE AS DIRECTED.
   c) COVER ALL NON-REMOVEABLE ITEMS AND EQUIPMENT IN THE WORK AREA WITH PLASTIC SHEETING TAPED SECURELY IN PLACE.
   d) REMOVE ALL HEATING, VENTILATION, AND AIR-CONDITIONING SYSTEM FILTERS, PACK THEM IN SEALABLE PLASTIC BAGS (6-MIL MINIMUM) FOR DISPOSAL IN THE APPROVED WASTE DISPOSAL SITE AND REPLACE THEM WITH NEW FILTERS.
3. POST WARNING SIGNS AND LABELS AS REQUIRED BY 29 CFR 1910.1001, ASTM E 849.

P) MAINTAIN ALL FIRE EXITS DURING CONSTRUCTION.

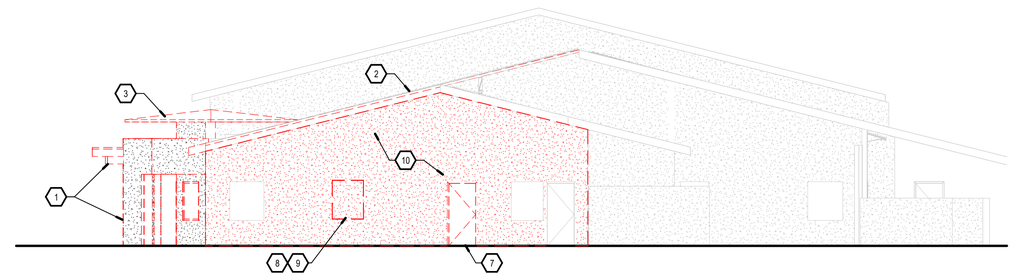

C2 EAST BUILDING ELEVATION
1/8" = 1'-0"

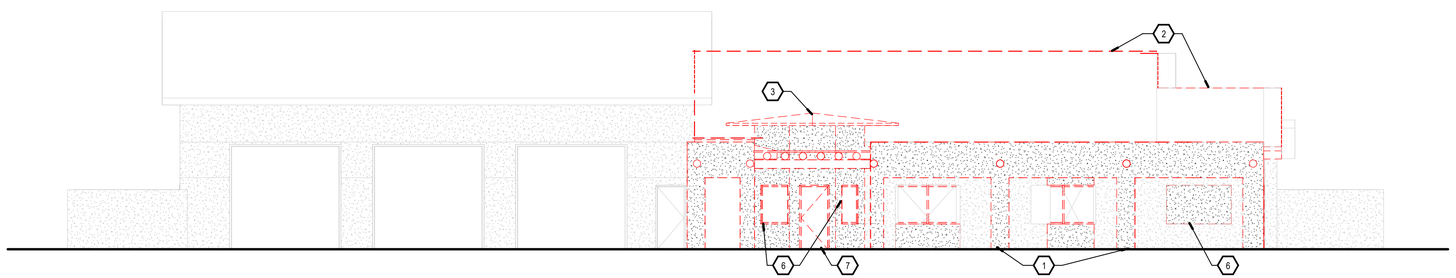

B2 SOUTH BUILDING ELEVATION
1/8" = 1'-0"

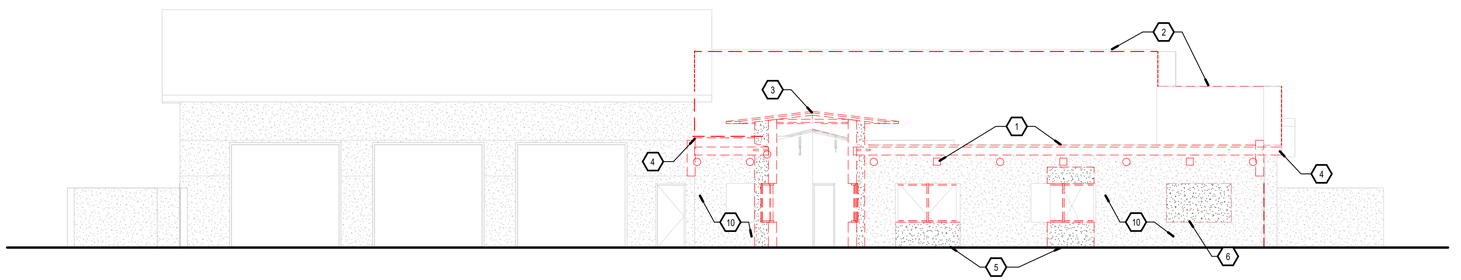

A2 SOUTH BUILDING ELEVATION
1/8" = 1'-0"

GENERAL NOTES

A) COORDINATE WITH MECHANICAL, ELECTRICAL & PLUMBING.

B) ALL ITEMS LISTED FOR DEMOLITION SHALL BE REMOVED IN THEIR ENTIRETY, THE OWNER HAS FIRST RIGHT OF REFUSAL.

KEYED NOTES

1 REMOVE EXTERIOR SHADE STRUCTURE.
2 REMOVE EXISING METAL ROOF. PRESERVE SHEATHING AND DECKING.
3 REMOVE EXISTING ROOF IN IT'S ENTIRETY.
4 REMOVE FULL EXTENTS OF EXISTING EAVES.
5 REMOVE EXISTING WINDOW. SALVAGE TO OWNER. FURTHER, REMOVE A PORTION OF THE WALL BELOW THE EXISTING WINDOW FOR THE NEW DOOR. COORDINATE THE NEW DOOR OPENING WIDTH WITH THE NEW DOOR SCHEDULE ON SHEET A-601, AND LOCATION ON SHEET A-101A.
6 REMOVE EXISTING WINDOW, SALVAGE TO OWNER.
7 REMOVE EXISTING DOOR AND FRAME.
8 REMOVE PORTION OF WALL INDICATED.
9 NEW OPENING FOR WINDOW. REFER TO THE NEW WINDOW ON A1/A-601 FOR THE HEIGHT, WIDTH, AND LOCATION OF THE NEW WINDOW.
10 RESURFACE FULL EXTENTS OF EXISTING STUCCO WALL.

LEGEND

EXISTING CONSTRUCTION TO REMAIN.

EXISTING CONSTRUCTION TO BE DEMOLISHED.

STUDIO SW ARCHITECTS
2101 Mountain Road NW Suite B | Albuquerque NM 87104
505-843-9639 | www.studioswarch.com

© 2025 Studio Southwest Architects, Inc. Duplication or reproduction by any means without the express written consent of Studio Southwest Architects, Inc. is a violation of federal and international law. The information contained in this document is the intellectual property of Studio Southwest Architects, Inc. and all rights thereto are reserved.

CONSULTANTS

Architect Engineer

STATE OF NEW MEXICO
LAURA B. ANDERSON
No. 5528
REGISTERED ARCHITECT

SFC HONDO FIRE STATION

645 OLD LAS VEGAS HIGHWAY
SANTA FE, NM 87505

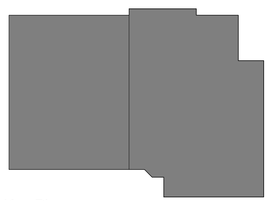

Key Plan NTS

No	Date	Description
		Revision Schedule

ISSUE:	100% CONSTRUCTION DOCUMENTS
PROJECT NUMBER:	2502
FILE:	SSWA_Inc_2025_Template.rte
DRAWN BY:	MA
CHECKED BY:	LA
DATE:	AUGUST 15, 2025

SHEET TITLE

EXTERIOR DEMOLITION BUILDING ELEVATIONS

AD201

8/19/2025 11:08:52 AM

C:\Users\mangeles\Documents\2502_SFC Hondo Fire Station_mangeles547K3.rvt

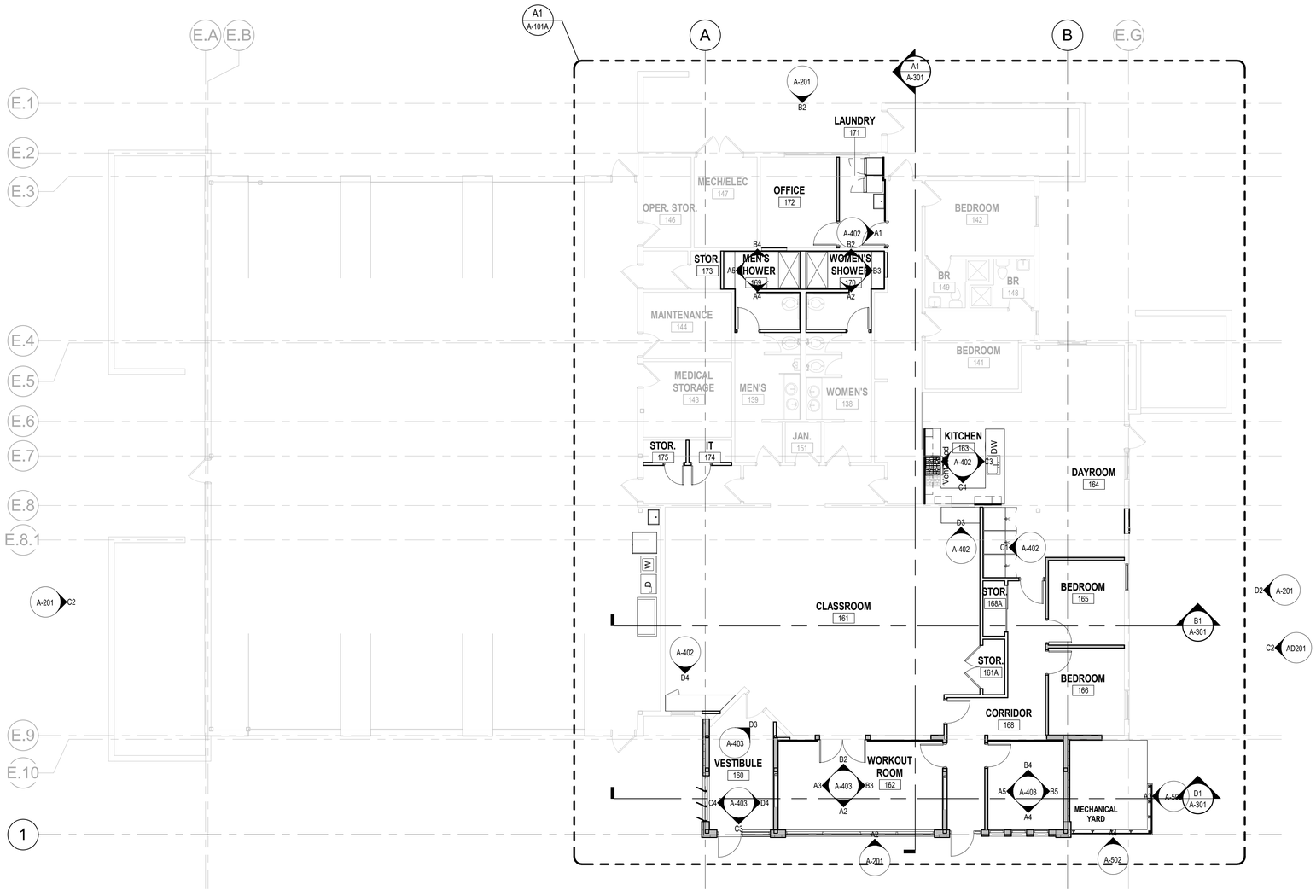

A1 FIRST FLOOR PLAN - OVERALL

1/8" = 1'-0"

Plan North

True North

GENERAL NOTES

A) COORDINATE WITH MECHANICAL, ELECTRICAL & PLUMBING.

B) UNLESS NOTED OTHERWISE, ALL INTERIOR DIMENSIONS ARE TO FACE OF STUD.

C) UNLESS NOTED OTHERWISE, ALL EXTERIOR DIMENSIONS ARE TO FACE OF STUD.

D) REFER TO ENLARGED PLANS A-401, FOR WALL TYPES AND DIMENSIONS WITHIN DETAILED AREAS.

F) ALL WALLS ARE TYPE S3H1, UNLESS NOTED OTHERWISE. REFER TO A-001 FOR PARTITION TYPES.

G) COORDINATE FINAL LOCATION OF FIRE EXTINGUISHERS WITH FIRE MARSHAL.

H) REFER TO A-601 FOR DOOR AND FRAME TYPES.

I) COORDINATE ANY SLAB DEMOLISHING/TRENCHING WITH STRUCTURAL FOR POST TENSIONING CABLE LOCATIONS.

KEYED NOTES

LEGEND

EXISTING CONSTRUCTION TO REMAIN

NEW CONSTRUCTION

ACOUSTICAL INSULATED WALL / PARTITION

STUDIO SW ARCHITECTS

2101 Mountain Road NW Suite B | Albuquerque NM 87104
505-843-9639 | www.studioswarch.com

© 2025 Studio Southwest Architects, Inc. Duplication or reproduction by any means without the express written consent of Studio Southwest Architects, Inc. is a violation of federal and international law. The information contained in this document is the intellectual property of Studio Southwest Architects, Inc. and all rights thereto are reserved.

CONSULTANTS

Architect Engineer

STATE OF NEW MEXICO
LAURA B. ANDERSON
No. 5528
REGISTERED ARCHITECT

SFC HONDO FIRE STATION

645 OLD LAS VEGAS HIGHWAY
SANTA FE, NM 87505

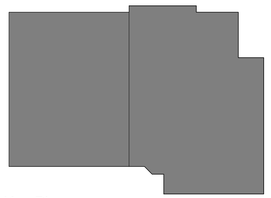

Key Plan NTS

No	Date	Description
Revision Schedule		

ISSUE:	100% CONSTRUCTION DOCUMENTS
PROJECT NUMBER:	2502
FILE:	SSWA_Inc_2025_Template.rte
DRAWN BY:	MA
CHECKED BY:	LA
DATE:	AUGUST 15, 2025

SHEET TITLE

FIRST FLOOR PLAN - OVERALL

A-101

8/19/2025 11:08:54 AM

C:\Users\mangeles\Documents\2502_SFC Hondo Fire Station_mangeles547K3.rvt

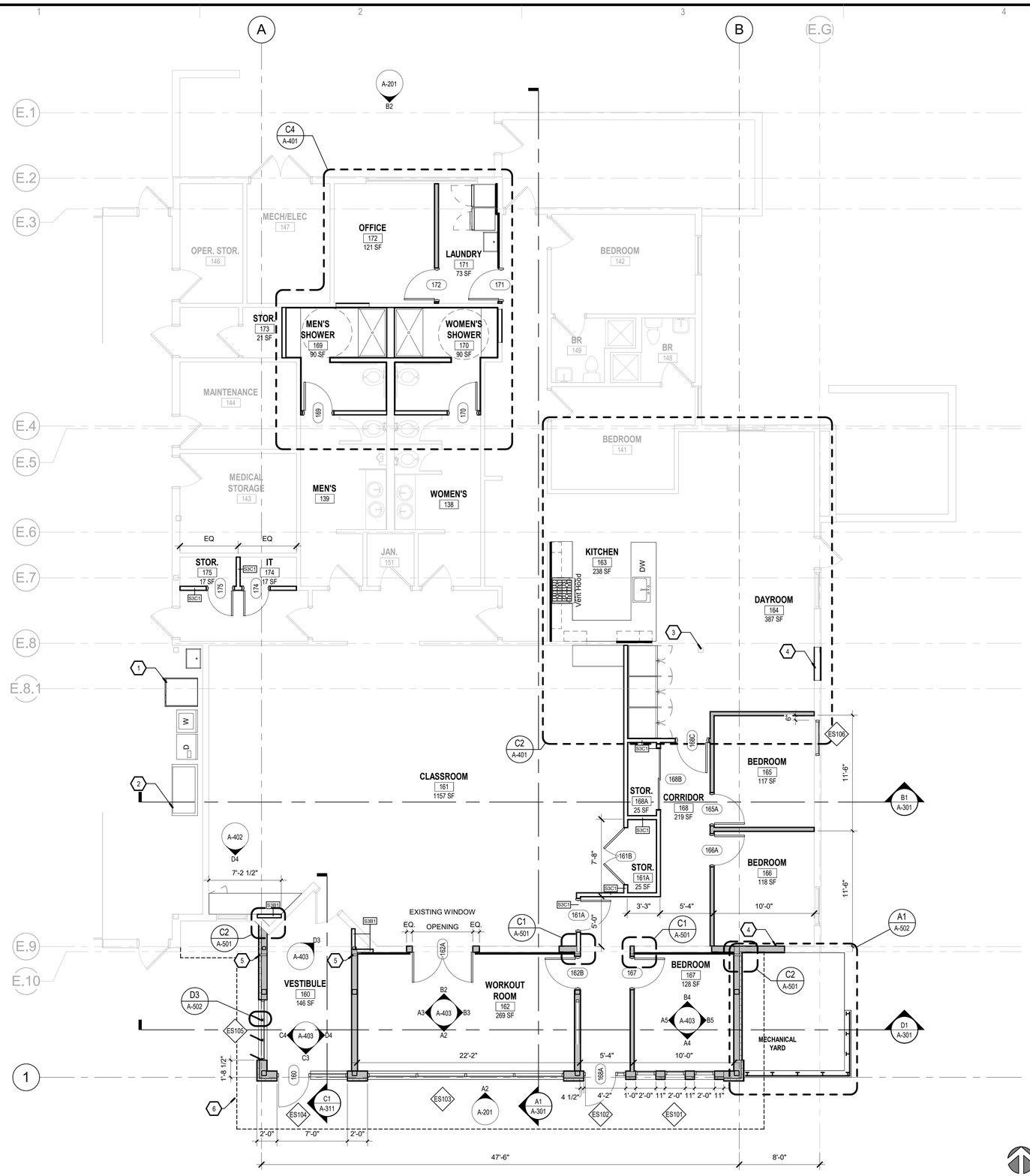

A1 FIRST FLOOR PLAN - AREA A

3/16" = 1'-0"

Plan North

True North

GENERAL NOTES

A) COORDINATE WITH MECHANICAL, ELECTRICAL & PLUMBING.

B) UNLESS NOTED OTHERWISE, ALL INTERIOR DIMENSIONS ARE TO FACE OF STUD.

C) UNLESS NOTED OTHERWISE, ALL EXTERIOR DIMENSIONS ARE TO FACE OF STUD.

D) REFER TO ENLARGED PLANS A-401, FOR WALL TYPES AND DIMENSIONS WITHIN DETAILED AREAS.

F) ALL WALLS ARE TYPE S3H1, UNLESS NOTED OTHERWISE. REFER TO A-001 FOR PARTITION TYPES.

G) COORDINATE FINAL LOCATION OF FIRE EXTINGUISHERS WITH FIRE MARSHAL.

H) REFER TO A-601 FOR DOOR AND FRAME TYPES.

I) COORDINATE ANY SLAB DEMOLISHING/TRENCHING WITH STRUCTURAL FOR POST TENSIONING CABLE LOCATIONS.

KEYED NOTES

1 EXTRACTOR
2 DRYING CABINET
3 EXISTING COLUMN TO REMAIN
4 INFILL PORTION OF WALL WHERE WINDOW / DOOR WAS DEMOLISHED. TO MATCH EXISTING WALL SYSTEM.
5 2" EXPANSION JOINT
6 LINE OF ROOF EAVE ABOVE

LEGEND

EXISTING CONSTRUCTION TO REMAIN

NEW CONSTRUCTION

ACOUSTICAL INSULATED WALL / PARTITION

STUDIO SW ARCHITECTS
2101 Mountain Road NW Suite B | Albuquerque NM 87104
505-843-9639 | www.studioswarch.com

© 2025 Studio Southwest Architects, Inc. Duplication or reproduction by any means without the express written consent of Studio Southwest Architects, Inc. is a violation of federal and international law. The information contained in this document is the intellectual property of Studio Southwest Architects, Inc. and all rights thereto are reserved.

CONSULTANTS

Architect Engineer

STATE OF NEW MEXICO
LAURA B. ANDERSON
No. 5528
REGISTERED ARCHITECT

SFC HONDO FIRE STATION

645 OLD LAS VEGAS HIGHWAY
SANTA FE, NM 87505



Key Plan NTS

No	Date	Description
Revision Schedule		

ISSUE:	100% CONSTRUCTION DOCUMENTS
PROJECT NUMBER:	2502
FILE:	SSWA_Inc_2025_Template.rte
DRAWN BY:	MA
CHECKED BY:	LA
DATE:	AUGUST 15, 2025

SHEET TITLE

FIRST FLOOR PLAN - AREA A

A-101A

8/19/2025 11:08:55 AM

C:\Users\mangeles\Documents\2502_SFC Hondo Fire Station_mangeles547K3.rvt

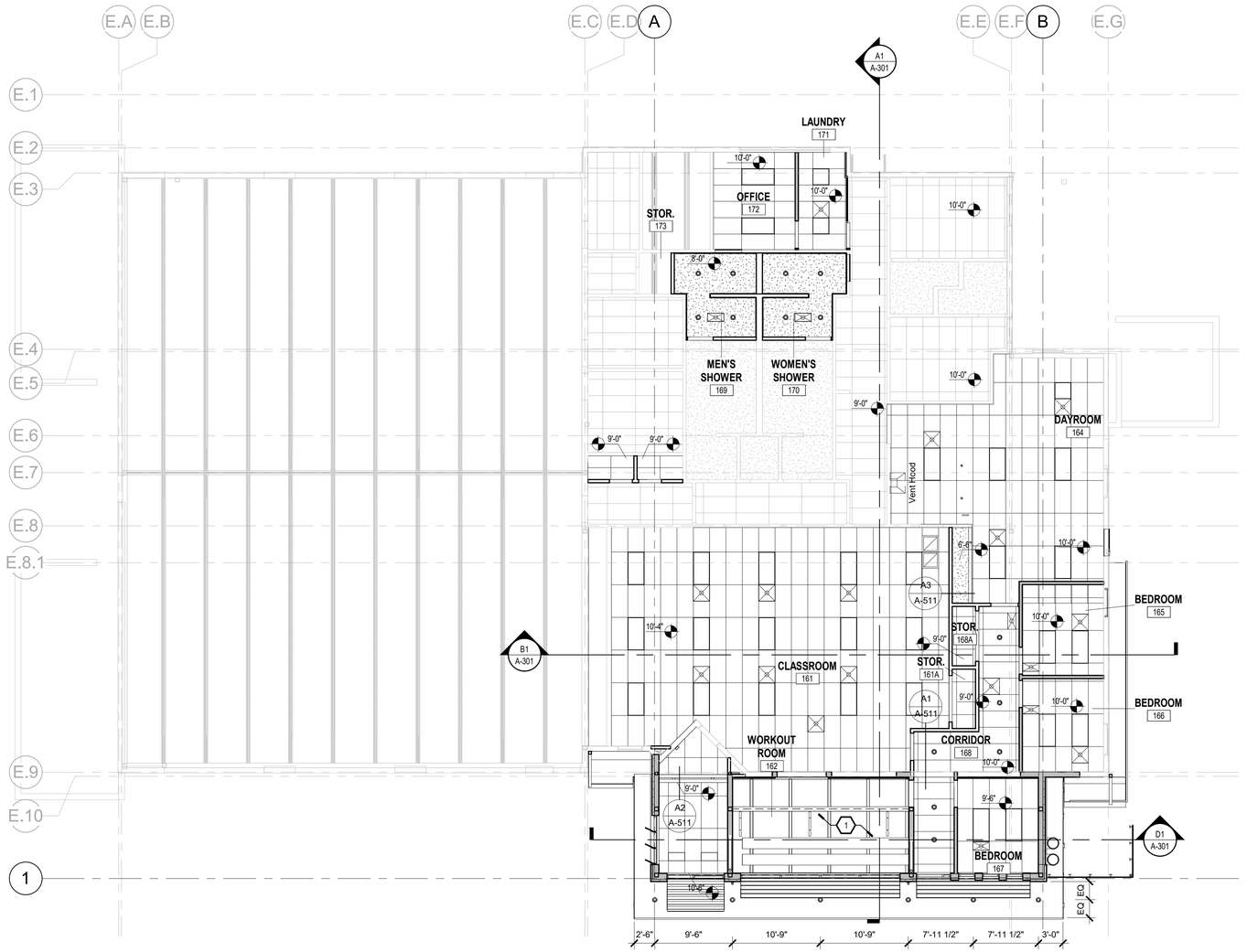

A1 1ST FLOOR REFLECTED CEILING PLAN

1/8" = 1'-0"

Plan North True North

GENERAL NOTES

A. COORDINATE WITH MECHANICAL, ELECTRICAL & PLUMBING.

B. UNLESS NOTED OTHERWISE, ALL CEILINGS ARE 10'-0" AFF.

C. UNLESS NOTED OTHERWISE, PAINT EXPOSED STRUCTURE, MECHANICAL AND PLUMBING EQUIPMENT, AND UNDERSIDE OF EXPOSED METAL DECK BLACK.

D. REFER TO A-511 FOR CEILING DETAILS

KEYED NOTES

1 EXPOSED TO STRUCTURE ABOVE.

LEGEND

2x4 LAY-IN CEILING

GYPSUM BOARD CEILING

METAL PANEL SOFFIT

PAINTED EXPOSED STRUCTURE, COLOR AS SELECTED BY ARCHITECT

MECH. & ELECT. FIXTURE LEGEND

REFER TO MECHANICAL AND ELECTRICAL SHEETS FOR FIXTURE SCHEDULE

STUDIO SW ARCHITECTS

2101 Mountain Road NW Suite B | Albuquerque NM 87104
505-843-9639 | www.studioswarch.com

© 2025 Studio Southwest Architects, Inc. Duplication or reproduction by any means without the express written consent of Studio Southwest Architects, Inc. is a violation of federal and international law. The information contained in this document is the intellectual property of Studio Southwest Architects, Inc. and all rights thereto are reserved.

CONSULTANTS

Architect Engineer

STATE OF NEW MEXICO
LAURA B. ANDERSON
No. 5528
REGISTERED ARCHITECT

SFC HONDO FIRE STATION

645 OLD LAS VEGAS HIGHWAY
SANTA FE, NM 87505

Key Plan NTS

No	Date	Description
Revision Schedule		

ISSUE:	100% CONSTRUCTION DOCUMENTS
PROJECT NUMBER:	2502
FILE:	SSWA_Inc_2025_Template.rte
DRAWN BY:	MA
CHECKED BY:	LA
DATE:	AUGUST 15, 2025

SHEET TITLE

FIRST FLOOR REFLECTED CEILING PLAN

A-111A

8/19/2025 11:08:56 AM
C:\Users\mangeles\Documents\2502_SFC Hondo Fire Station_mangeles547K3.rvt

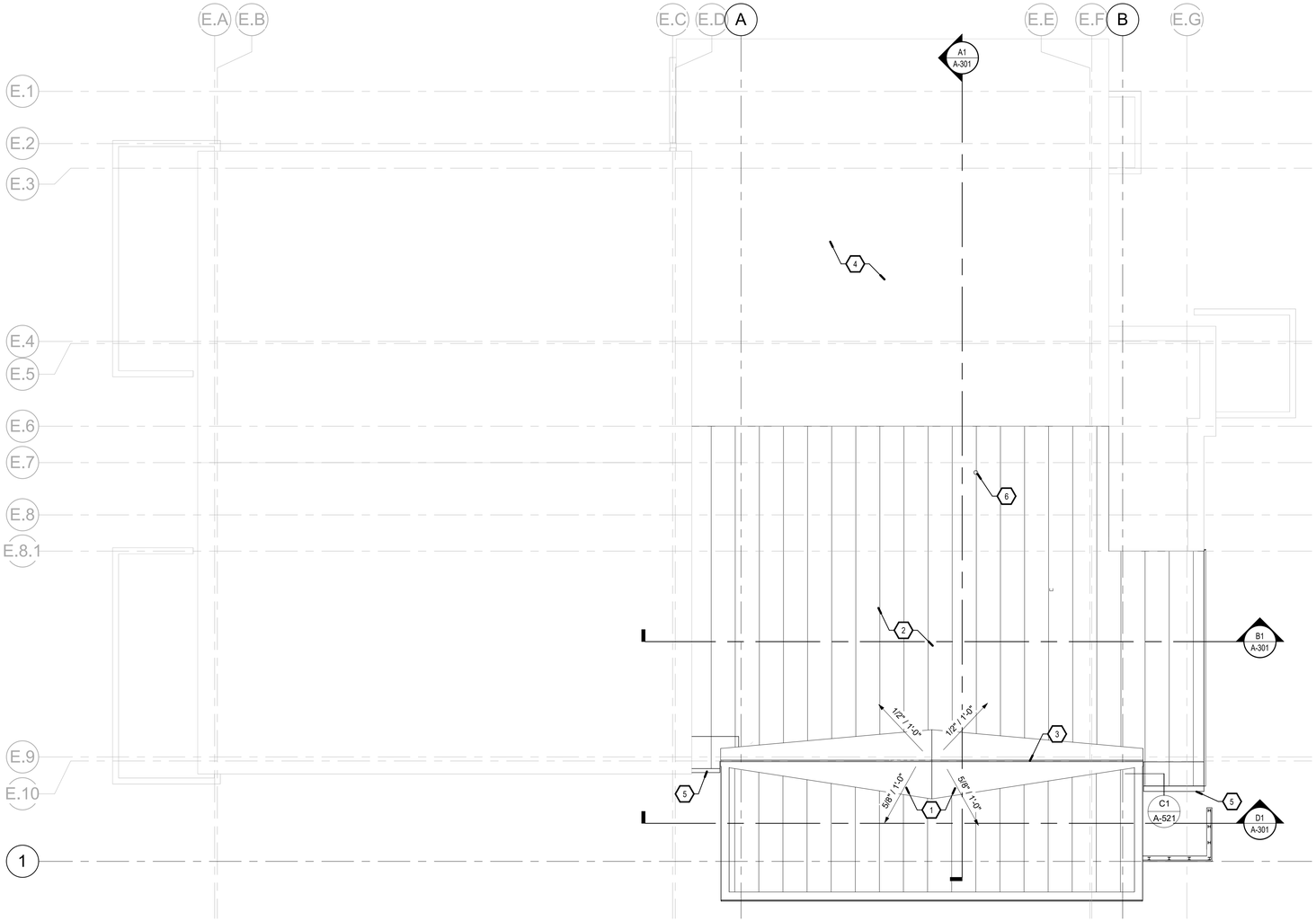

A1 ROOF PLAN
1/8" = 1'-0"

GENERAL NOTES

A. COORDINATE WITH MECHANICAL, ELECTRICAL & PLUMBING

B. REFER TO A-521 FOR ROOF DETAILS.

KEYED NOTES

1 TPO CRICKET
2 NEW STANDING SEAM METAL ROOF
3 2" EXPANSION JOINT. REFER TO A3/A-521.
4 EXISTING ROOF TO REMAIN.
5 SCUPPER AND DOWNSPOUT
6 RANGE HOOD EXHAUST. SEE MECHANICAL.

LEGEND

STANDING SEAM METAL ROOF

STUDIO SW ARCHITECTS
2101 Mountain Road NW Suite B | Albuquerque NM 87104
505-843-9639 | www.studioswarch.com

© 2025 Studio Southwest Architects, Inc. Duplication or reproduction by any means without the express written consent of Studio Southwest Architects, Inc. is a violation of federal and international law. The information contained in this document is the intellectual property of Studio Southwest Architects, Inc. and all rights thereto are reserved.

CONSULTANTS

Architect Engineer

STATE OF NEW MEXICO
LAURA B. ANDERSON
No. 5528
REGISTERED ARCHITECT

SFC HONDO FIRE STATION

645 OLD LAS VEGAS HIGHWAY
SANTA FE, NM 87505

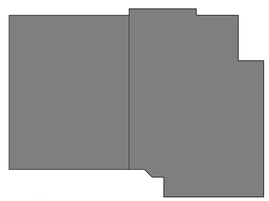

Key Plan NTS

No	Date	Description
Revision Schedule		

ISSUE:	100% CONSTRUCTION DOCUMENTS
PROJECT NUMBER:	2502
FILE:	SSWA_Inc_2025_Template.rte
DRAWN BY:	MA
CHECKED BY:	LA
DATE:	AUGUST 15, 2025

SHEET TITLE

OVERALL ROOF PLAN

Plan North True North

A-121A

8/19/2025 11:09:00 AM
C:\Users\mangeles\Documents\2502_SFC Hondo Fire Station_mangeles547K3.rvt

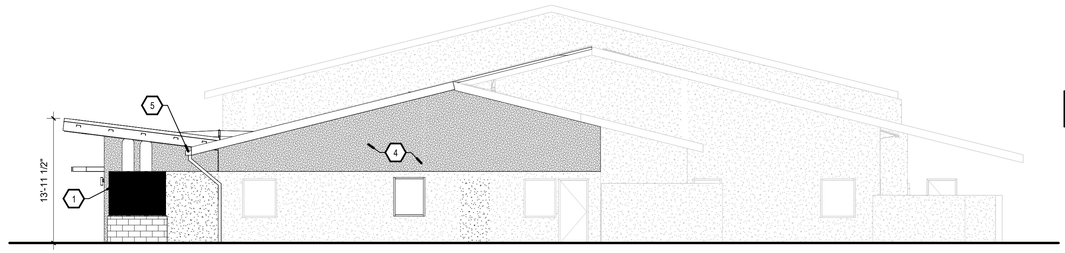

D2 EAST BUILDING ELEVATION
1/8" = 1'-0"

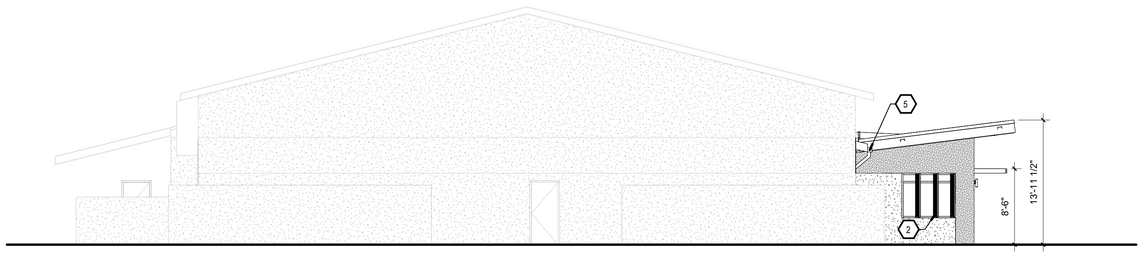

C2 WEST BUILDING ELEVATION
1/8" = 1'-0"



B2 NORTH BUILDING ELEVATION
1/8" = 1'-0"

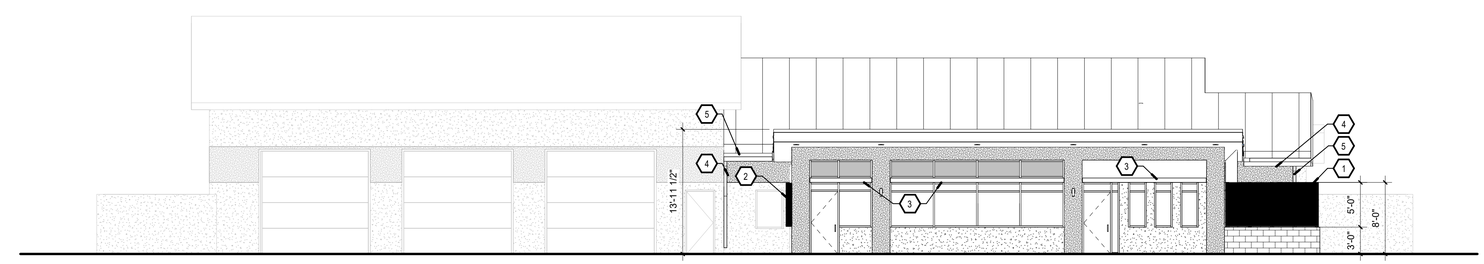

A2 SOUTH BUILDING ELEVATION
1/8" = 1'-0"

GENERAL NOTES

A. COORDINATE WITH MECHANICAL, ELECTRICAL & PLUMBING

B. GRADE VARIES, REFER TO CIVIL CD-02 FOR EXTERIOR FINISH GRADES

KEYED NOTES

1 1/4" STEEL SCREEN PANEL
2 1/4" STEEL PANEL SHADE FINS
3 SHADE AWNINGS.
4 PAINT EXISITNG STUCCO.
5 SCUPPER AND DOWNSPOUT

LEGEND

PT-03

PT04

CMU

EXISTING STUCCO

STUDIO SW ARCHITECTS
2101 Mountain Road NW Suite B | Albuquerque NM 87104
505-843-9639 | www.studioswarch.com

© 2025 Studio Southwest Architects, Inc. Duplication or reproduction by any means without the express written consent of Studio Southwest Architects, Inc. is a violation of federal and international law. The information contained in this document is the intellectual property of Studio Southwest Architects, Inc. and all rights thereto are reserved.

CONSULTANTS

Architect Engineer

STATE OF NEW MEXICO
LAURA B. ANDERSON
No. 5528
REGISTERED ARCHITECT

SFC HONDO FIRE STATION

645 OLD LAS VEGAS HIGHWAY
SANTA FE, NM 87505

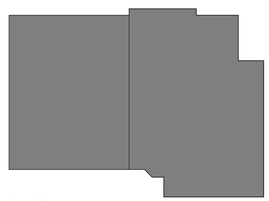

Key Plan NTS

No	Date	Description
Revision Schedule		

ISSUE:	100% CONSTRUCTION DOCUMENTS
PROJECT NUMBER:	2502
FILE:	SSWA_Inc_2025_Template.rte
DRAWN BY:	MA
CHECKED BY:	LA
DATE:	AUGUST 15, 2025

SHEET TITLE

EXTERIOR BUILDING ELEVATIONS

A-201

8/19/2025 11:09:01 AM

C:\Users\mangeles\Documents\2502_SFC Hondo Fire Station_mangeles547K3.rvt

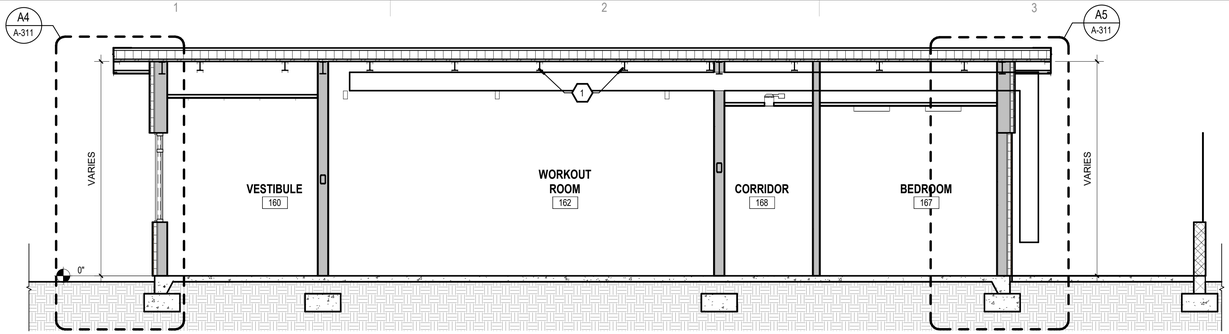

D1 EAST/WEST BUILDING SECTION

1/4" = 1'-0"

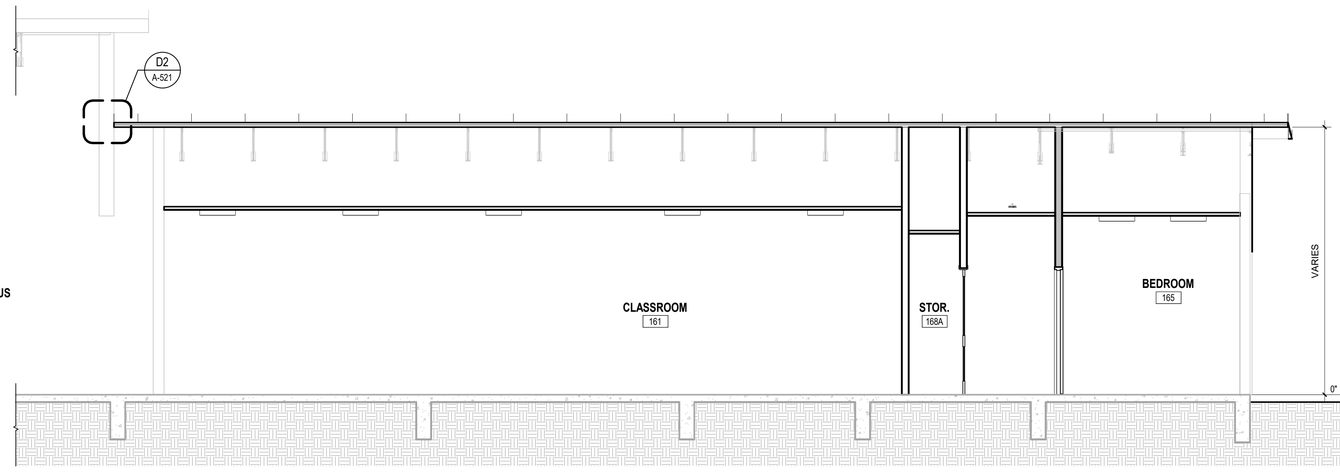

B1 EAST/WEST BUILDING SECTION 02

1/4" = 1'-0"

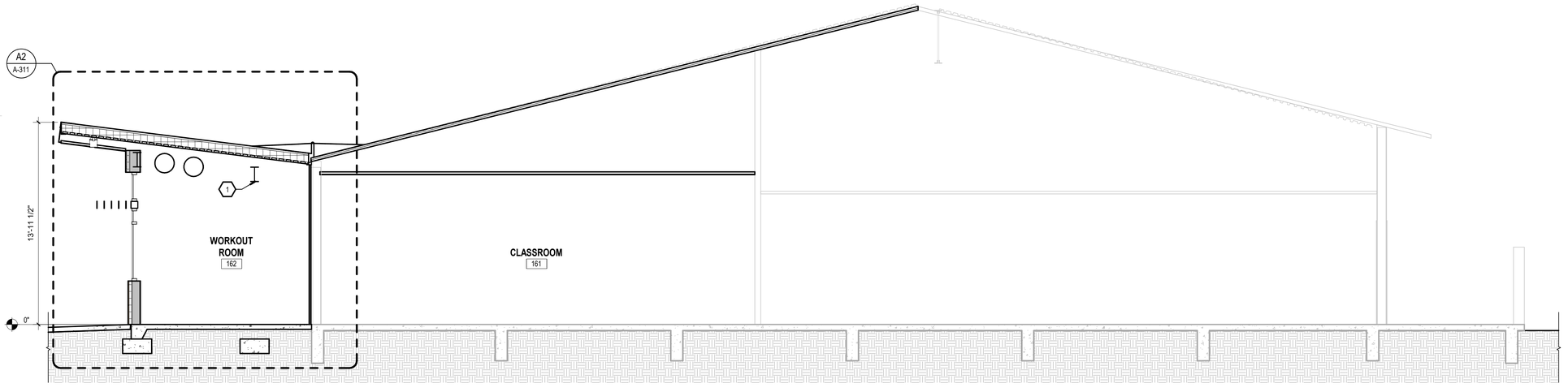

A1 NORTH/SOUTH BUILDING SECTION

1/4" = 1'-0"

GENERAL NOTES

A. COORDINATE WITH MECHANICAL, ELECTRICAL & PLUMBING

B. FIELD VERIFY ALL CRITICAL DIMENSIONS

C. FIRE STOP ALL PENETRATIONS THROUGH FIRE RATED CONSTRUCTION

D. PAINT ALL EXPOSED STEEL. ARCHITECT TO DETERMINE COLOR

F. SEE STRUCTURAL SHEETS FOR COMPONENTS OF BUILDING FOUNDATIONS

G. SEE STRUCTURAL SHEETS FOR ALL STRUCTURAL STEEL COMPONENTS

H. AT ALL EXTERIOR WALL ASSEMBLIES, EXTEND INTERIOR GYPSUM BOARD TO ROOF ASSEMBLY

J. AT EXPOSED STEM WALL, MATCH TO ADJACENT FINISH ABOVE. COORDINATE WITH CIVIL

KEYED NOTES

1 EXPOSED BEAM STRUCTURE, PAINT TO MATCH METAL DECK.

STUDIO SW ARCHITECTS

2101 Mountain Road NW Suite B | Albuquerque NM 87104
505-843-9639 | www.studioswarch.com

© 2025 Studio Southwest Architects, Inc. Duplication or reproduction by any means without the express written consent of Studio Southwest Architects, Inc. is a violation of federal and international law. The information contained in this document is the intellectual property of Studio Southwest Architects, Inc. and all rights thereto are reserved.

CONSULTANTS

Architect Engineer

STATE OF NEW MEXICO
LAURA B. ANDERSON
No. 5528
REGISTERED ARCHITECT

SFC HONDO FIRE STATION

645 OLD LAS VEGAS HIGHWAY
SANTA FE, NM 87505

Key Plan NTS

No	Date	Description
Revision Schedule		

ISSUE:	100% CONSTRUCTION DOCUMENTS
PROJECT NUMBER:	2502
FILE:	SSWA_Inc_2025_Template.rte
DRAWN BY:	MA
CHECKED BY:	LA
DATE:	AUGUST 15, 2025

SHEET TITLE

BUILDING SECTIONS

A-301

8/19/2025 11:09:02 AM
C:\Users\mangeles\Documents\2502_SFC Hondo Fire Station_mangeles547K3.rvt

KEYED NOTES

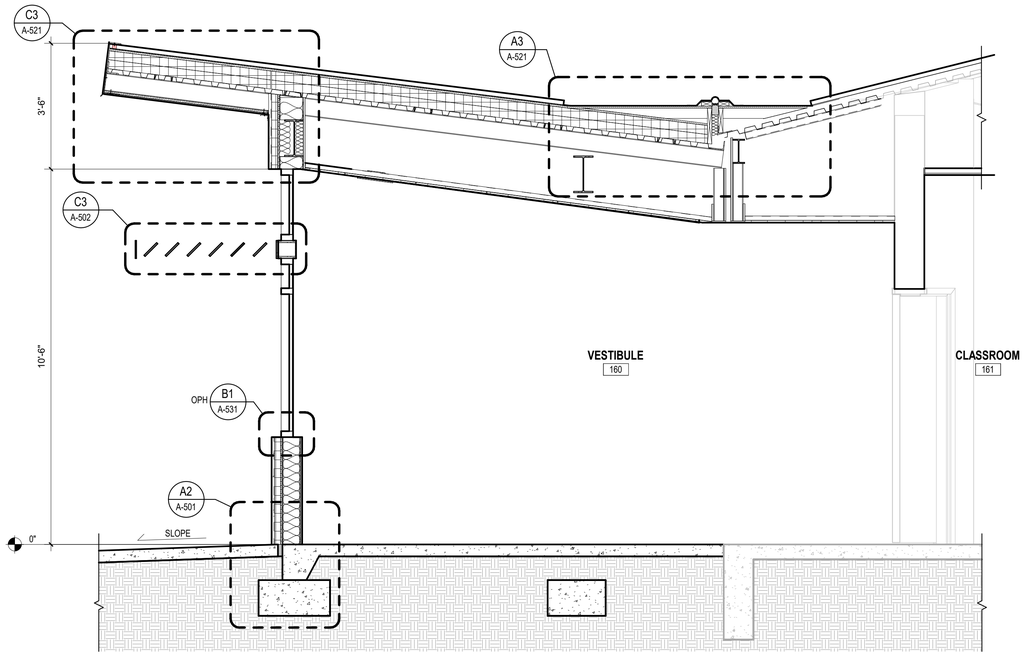

C1 WALL SECTION THROUGH VESTIBULE
1/2" = 1'-0"

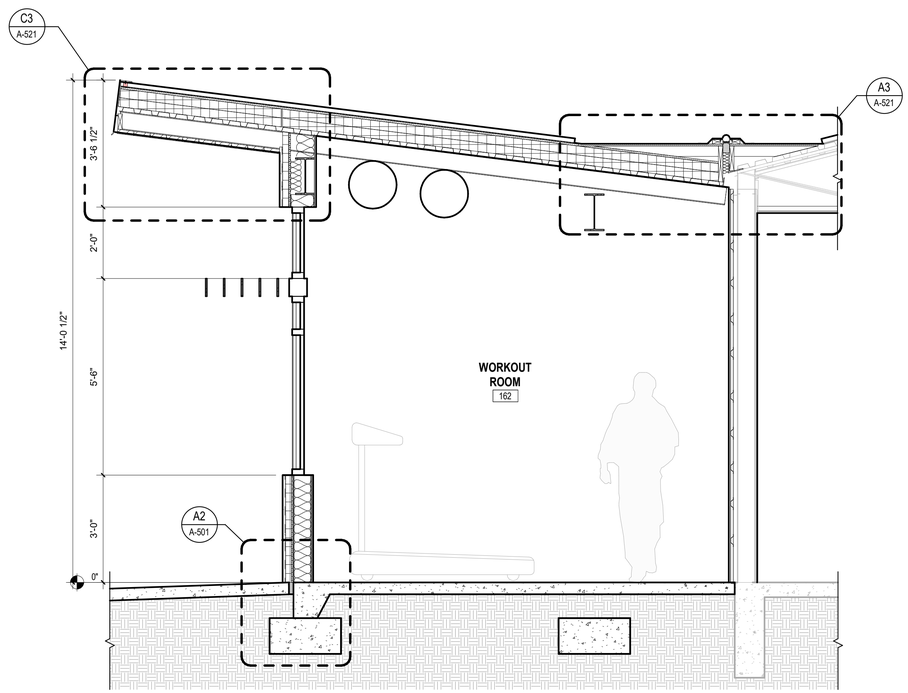

A2 WALL SECTION THROUGH WORKOUT ROOM
1/2" = 1'-0"

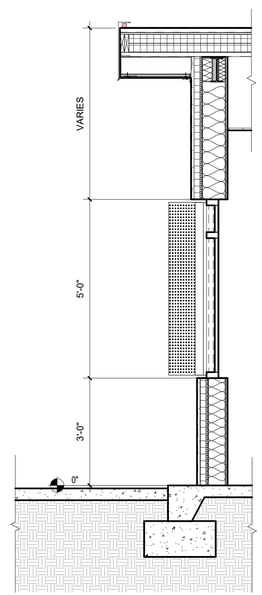

A4 WALL SECTION
1/2" = 1'-0"

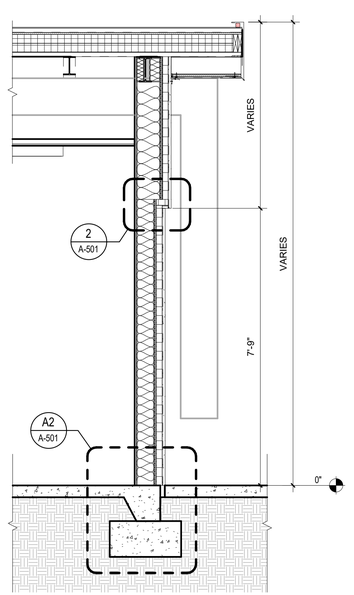

A5 WALL SECTION
1/2" = 1'-0"

STUDIO SW ARCHITECTS
2101 Mountain Road NW Suite B | Albuquerque NM 87104
505-843-9639 | www.studioswarch.com

© 2025 Studio Southwest Architects, Inc. Duplication or reproduction by any means without the express written consent of Studio Southwest Architects, Inc. is a violation of federal and international law. The information contained in this document is the intellectual property of Studio Southwest Architects, Inc. and all rights thereto are reserved.

CONSULTANTS

Architect Engineer

STATE OF NEW MEXICO
LAURA B. ANDERSON
No. 5528
REGISTERED ARCHITECT

SFC HONDO FIRE STATION

645 OLD LAS VEGAS HIGHWAY
SANTA FE, NM 87505

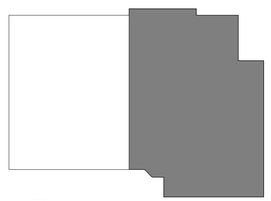

Key Plan NTS

No	Date	Description
Revision Schedule		

ISSUE:	100% CONSTRUCTION DOCUMENTS
PROJECT NUMBER:	2502
FILE:	SSWA_Inc_2025_Template.rte
DRAWN BY:	MA
CHECKED BY:	LA
DATE:	AUGUST 15, 2025

SHEET TITLE

WALL SECTIONS

A-311

8/19/2025 11:09:03 AM

C:\Users\mangeles\Documents\2502_SFC Hondo Fire Station_mangeles547K3.rvt

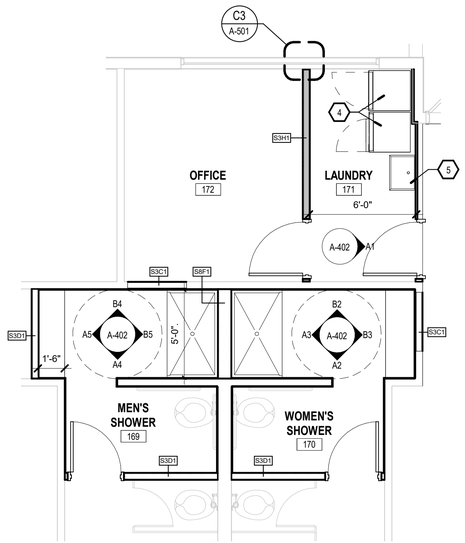

C4 ENLARGED SHOWER PLAN
1/4" = 1'-0"

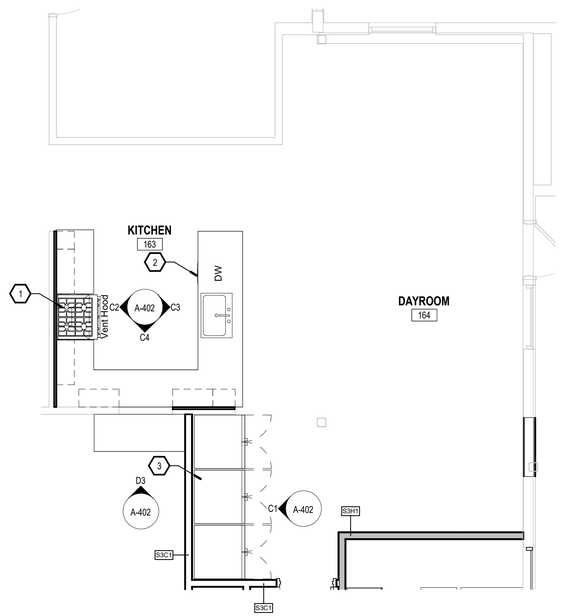

C2 ENLARGED KITCHEN PLAN
1/4" = 1'-0"

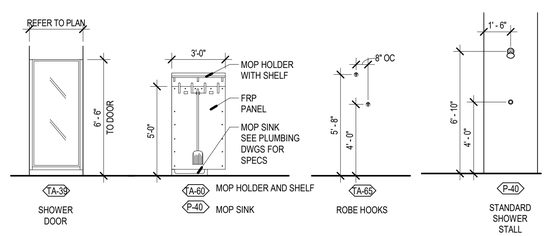

A4 TOILET ACCESSORY MOUNTING HEIGHTS
1/4" = 1'-0"

GENERAL NOTES

A) COORDINATE WITH MECHANICAL, ELECTRICAL & PLUMBING.

B) REFER TO OVERALL PLANS FOR INFORMATION NOT INDICATED IN ENLARGED PLANS.

C) UNLESS NOTED OTHERWISE, ALL DIMENSIONS ARE TO FACE OF STUD OR BLOCK.

D) ALL INTERIOR FINISH MATERIALS TO COMPLY WITH FIRE RATINGS REQUIRED BY IBC TABLE 803.5.

E) UNLESS NOTED OTHERWISE, PLUMBING LOCATION DIMENSIONS ARE TO CENTERLINE OF FIXTURE.

F) UNLESS NOTED OTHERWISE, LOWER CASEWORK DEPTH IS 2'-0" AND UPPER CASEWORK DEPTH IS 1'-0".

G) REFER TO A-701 FOR MATERIAL SCHEDULE

H) FIELD VERIFY ALL CRITICAL DIMENSIONS.

KEYED NOTES

1 NEW RANGE AND HOOD.
2 NEW DISH WASHER.
3 NEW FRIDGE.
4 NEW WASHER AND DRYER.
5 NEW UTILITY SINK.

LEGEND - MATERIALS

REFER TOA-701 FOR MATERIAL SCHEDULE

BT-1	BASE TILE	RB-1	RUBBER BASE
PL-1	PLASTIC LAMINATE	SS-1	SOLID SURFACE
PT-1	PAINT - WHITE	WT-1	WALL TILE
PT-2	PAINT - GRAY		

STUDIO SW ARCHITECTS
2101 Mountain Road NW Suite B | Albuquerque NM 87104
505-843-9639 | www.studioswarch.com

© 2025 Studio Southwest Architects, Inc. Duplication or reproduction by any means without the express written consent of Studio Southwest Architects, Inc. is a violation of federal and international law. The information contained in this document is the intellectual property of Studio Southwest Architects, Inc. and all rights thereto are reserved.

CONSULTANTS

Architect Engineer

STATE OF NEW MEXICO
LAURA B. ANDERSON
No. 5528
REGISTERED ARCHITECT

SFC HONDO FIRE STATION

645 OLD LAS VEGAS HIGHWAY
SANTA FE, NM 87505

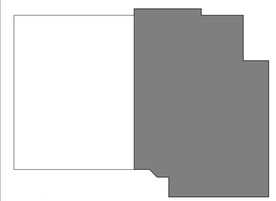

Key Plan NTS

No	Date	Description
		Revision Schedule

ISSUE:	100% CONSTRUCTION DOCUMENTS
PROJECT NUMBER:	2502
FILE:	SSWA_Inc_2025_Template.rte
DRAWN BY:	MA
CHECKED BY:	LA
DATE:	AUGUST 15, 2025

SHEET TITLE

ENLARGED PLANS

A-401

8/19/2025 11:09:04 AM
C:\Users\mangeles\Documents\2502_SFC Hondo Fire Station_mangeles547K3.rvt

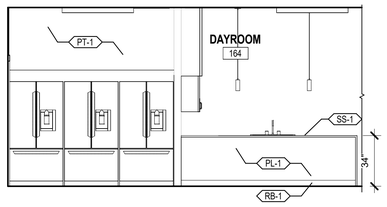

C1 KITCHEN - FRIDGE
1/4" = 1'-0"

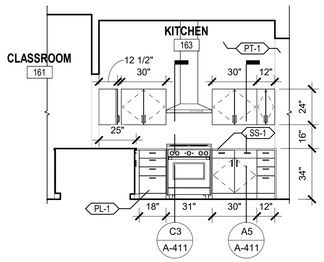

C2 KITCHEN - WEST
1/4" = 1'-0"

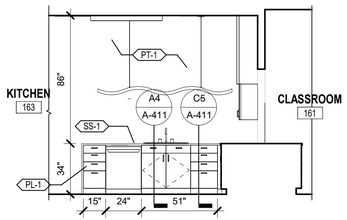

C3 KITCHEN - EAST
1/4" = 1'-0"

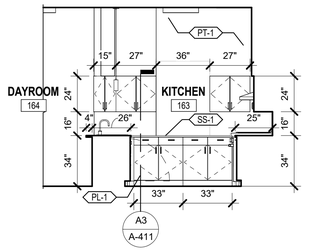

C4 KITCHEN - SOUTH
1/4" = 1'-0"

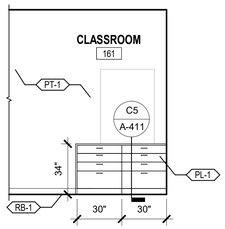

D3 CLASSROOM - NORTH
1/4" = 1'-0"

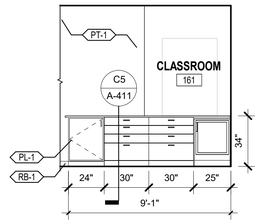

D4 CLASSROOM - SOUTH
1/4" = 1'-0"

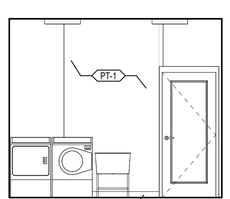

A1 LAUNDRY - EAST
1/4" = 1'-0"

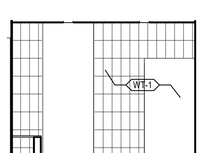

A2 WOMEN'S SOUTH
1/4" = 1'-0"

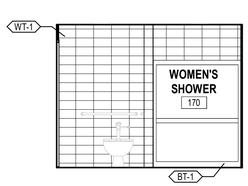

A3 WOMEN'S WEST
1/4" = 1'-0"

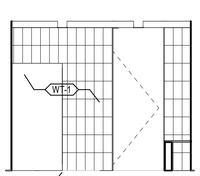

A4 MEN'S SOUTH
1/4" = 1'-0"

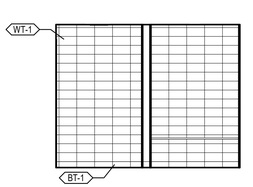

A5 MEN'S WEST
1/4" = 1'-0"

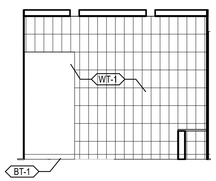

B2 WOMEN'S NORTH
1/4" = 1'-0"

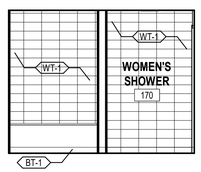

B3 WOMEN'S EAST
1/4" = 1'-0"

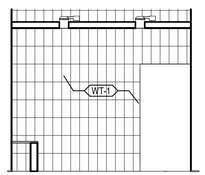

B4 MEN'S NORTH
1/4" = 1'-0"

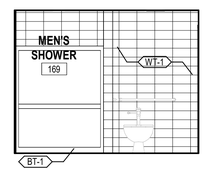

B5 MEN'S EAST
1/4" = 1'-0"

GENERAL NOTES

A) COORDINATE WITH MECHANICAL, ELECTRICAL & PLUMBING.

B) REFER TO OVERALL PLANS FOR INFORMATION NOT INDICATED IN ENLARGED PLANS.

C) UNLESS NOTED OTHERWISE, ALL DIMENSIONS ARE TO FACE OF STUD OR BLOCK.

D) ALL INTERIOR FINISH MATERIALS TO COMPLY WITH FIRE RATINGS REQUIRED BY IBC TABLE 803.5.

E) UNLESS NOTED OTHERWISE, PLUMBING LOCATION DIMENSIONS ARE TO CENTERLINE OF FIXTURE.

F) UNLESS NOTED OTHERWISE, LOWER CASEWORK DEPTH IS 2'-0" AND UPPER CASEWORK DEPTH IS 1'-0".

G) REFER TO A-701 FOR MATERIAL SCHEDULE

H) FIELD VERIFY ALL CRITICAL DIMENSIONS.

KEYED NOTES

LEGEND - MATERIALS

REFER TOA-701 FOR MATERIAL SCHEDULE

BT-1	BASE TILE	RB-1	RUBBER BASE
PL-1	PLASTIC LAMINATE	SS-1	SOLID SURFACE
PT-1	PAINT - WHITE	WT-1	WALL TILE
PT-2	PAINT - GRAY		

STUDIO SW ARCHITECTS
2101 Mountain Road NW Suite B | Albuquerque NM 87104
505-843-9639 | www.studioswarch.com

© 2025 Studio Southwest Architects, Inc. Duplication or reproduction by any means without the express written consent of Studio Southwest Architects, Inc. is a violation of federal and international law. The information contained in this document is the intellectual property of Studio Southwest Architects, Inc. and all rights thereto are reserved.

CONSULTANTS

Architect Engineer

STATE OF NEW MEXICO
LAURA B. ANDERSON
No. 5528
REGISTERED ARCHITECT

SFC HONDO FIRE STATION

645 OLD LAS VEGAS HIGHWAY
SANTA FE, NM 87505



Key Plan NTS

No	Date	Description
		Revision Schedule

ISSUE:	100% CONSTRUCTION DOCUMENTS
PROJECT NUMBER:	2502
FILE:	SSWA_Inc_2025_Template.rte
DRAWN BY:	MA
CHECKED BY:	LA
DATE:	AUGUST 15, 2025

SHEET TITLE

INTERIOR ELEVATIONS

A-402

8/19/2025 11:09:06 AM

C:\Users\mangeles\Documents\2502_SFC Hondo Fire Station_mangeles547K3.rvt

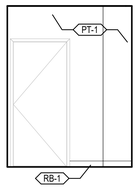

D3 VESTIBULE - NE
1/4" = 1'-0"

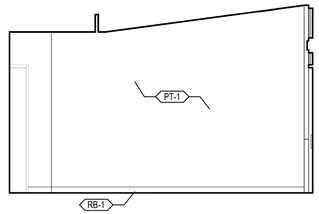

D4 VESTIBULE - EAST
1/4" = 1'-0"

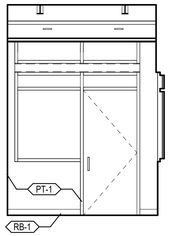

C3 VESTIBULE - SOUTH
1/4" = 1'-0"

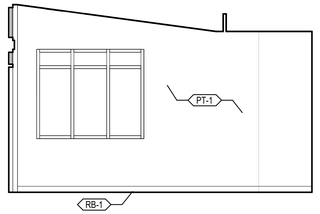

C4 VESTIBULE - WEST
1/4" = 1'-0"

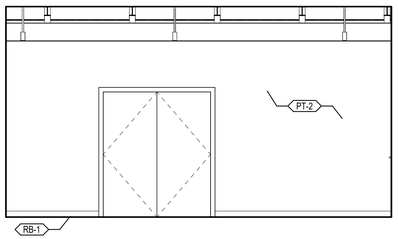

B2 WORKOUT RM - NORTH
1/4" = 1'-0"

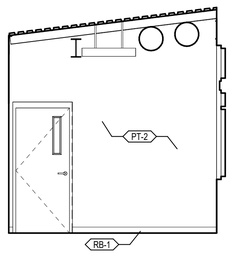

B3 WORKOUT RM - EAST
1/4" = 1'-0"

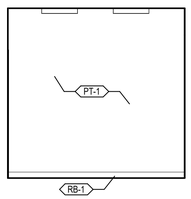

B4 BEDROOM - NORTH
1/4" = 1'-0"

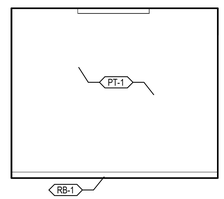

B5 BEDROOM - EAST
1/4" = 1'-0"

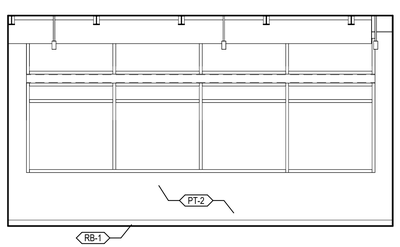

A2 WORKOUT RM - SOUTH
1/4" = 1'-0"

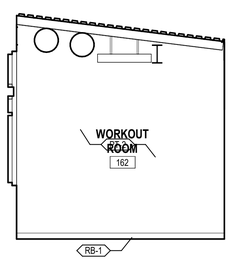

A3 WORKOUT RM - WEST
1/4" = 1'-0"

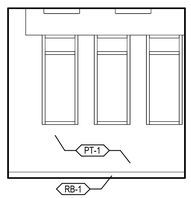

A4 BEDROOM - SOUTH
1/4" = 1'-0"

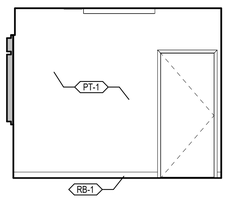

A5 BEDROOM - WEST
1/4" = 1'-0"

GENERAL NOTES

A) COORDINATE WITH MECHANICAL, ELECTRICAL & PLUMBING.

B) REFER TO OVERALL PLANS FOR INFORMATION NOT INDICATED IN ENLARGED PLANS.

C) UNLESS NOTED OTHERWISE, ALL DIMENSIONS ARE TO FACE OF STUD OR BLOCK.

D) ALL INTERIOR FINISH MATERIALS TO COMPLY WITH FIRE RATINGS REQUIRED BY IBC TABLE 803.5.

E) UNLESS NOTED OTHERWISE, PLUMBING LOCATION DIMENSIONS ARE TO CENTERLINE OF FIXTURE.

F) UNLESS NOTED OTHERWISE, LOWER CASEWORK DEPTH IS 2'-0" AND UPPER CASEWORK DEPTH IS 1'-0".

G) REFER TO A-701 FOR MATERIAL SCHEDULE

H) FIELD VERIFY ALL CRITICAL DIMENSIONS.

KEYED NOTES

LEGEND - MATERIALS

REFER TOA-701 FOR MATERIAL SCHEDULE

BT-1	BASE TILE
PT-1	PAINT - WHITE
PT-2	PAINT - GRAY
RB-1	RUBBER BASE

STUDIO SW ARCHITECTS
2101 Mountain Road NW Suite B | Albuquerque NM 87104
505-843-9639 | www.studioswarch.com

© 2025 Studio Southwest Architects, Inc. Duplication or reproduction by any means without the express written consent of Studio Southwest Architects, Inc. is a violation of federal and international law. The information contained in this document is the intellectual property of Studio Southwest Architects, Inc. and all rights thereto are reserved.

CONSULTANTS

Architect Engineer

STATE OF NEW MEXICO
LAURA B. ANDERSON
No. 5528
REGISTERED ARCHITECT

SFC HONDO FIRE STATION

645 OLD LAS VEGAS HIGHWAY
SANTA FE, NM 87505

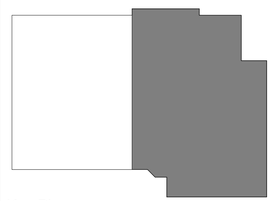

Key Plan NTS

No	Date	Description
		Revision Schedule

ISSUE:	100% CONSTRUCTION DOCUMENTS
PROJECT NUMBER:	2502
FILE:	SSWA_Inc_2025_Template.rte
DRAWN BY:	MA
CHECKED BY:	LA
DATE:	AUGUST 15, 2025

SHEET TITLE

INTERIOR ELEVATIONS

A-403

8/19/2025 11:09:06 AM
C:\Users\mangeles\Documents\2502_SFC Hondo Fire Station_mangeles547K3.rvt

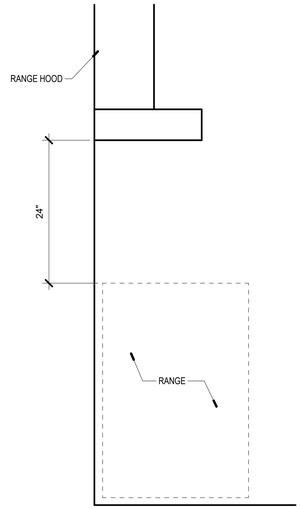

C3 CASEWORK SECTION
1" = 1'-0"

GENERAL NOTES

A) COORDINATE WITH MECHANICAL, ELECTRICAL & PLUMBING.

B) REFER TO OVERALL PLANS FOR INFORMATION NOT INDICATED IN ENLARGED PLANS.

C) UNLESS NOTED OTHERWISE, ALL DIMENSIONS ARE TO FACE OF STUD OR BLOCK.

D) ALL INTERIOR FINISH MATERIALS TO COMPLY WITH FIRE RATINGS REQUIRED BY IBC TABLE 803.5.

E) UNLESS NOTED OTHERWISE, PLUMBING LOCATION DIMENSIONS ARE TO CENTERLINE OF FIXTURE.

F) UNLESS NOTED OTHERWISE, LOWER CASEWORK DEPTH IS 2'-0" AND UPPER CASEWORK DEPTH IS 1'-0".

G) REFER TO A-701 FOR MATERIAL SCHEDULE

H) FIELD VERIFY ALL CRITICAL DIMENSIONS.

KEYED NOTES

1 CABINET DRAWER PULLS
2 ADJUSTABLE PLASTIC LAMINATE SHELVES
3 4" BASE
4 SOLID SURFACE COUNTERTOP. EASE ALL EXPOSED EDGES.
5 FAUCET
6 UNDERMOUNT SINK

LEGEND - MATERIALS

REFER TOA-701 FOR MATERIAL SCHEDULE

BT-1	BASE TILE
PL-1	PLASTIC LAMINATE
PT-1	PAINT
RB-1	RUBBER BASE
SS-1	SOLID SURFACE
WT-1	WALL TILE

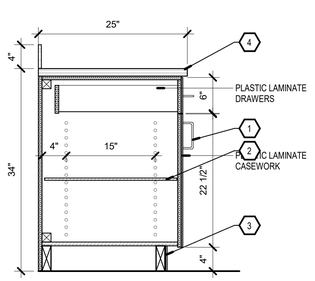

C4 CASEWORK SECTION
1" = 1'-0"

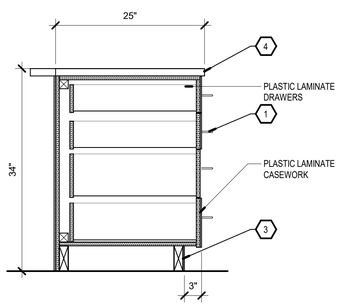

C5 CASEWORK SECTION
1" = 1'-0"

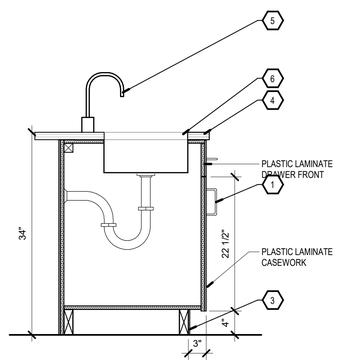

A4 CASEWORK SECTION
1" = 1'-0"

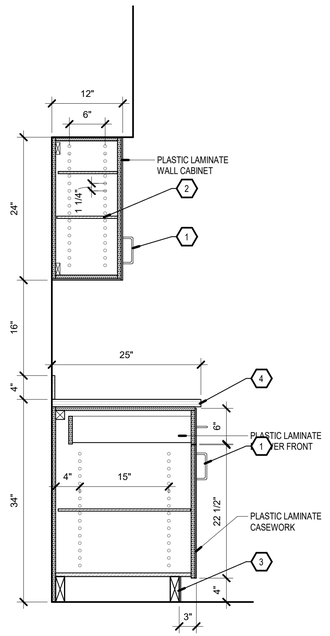

A3 CASEWORK SECTION
1" = 1'-0"

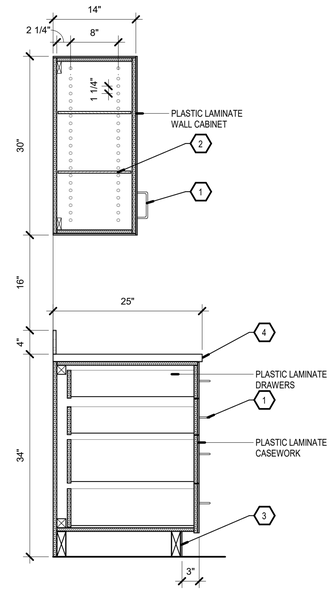

A5 CASEWORK SECTION
1" = 1'-0"

STUDIO SW ARCHITECTS
2101 Mountain Road NW Suite B | Albuquerque NM 87104
505-843-9639 | www.studioswarch.com

© 2025 Studio Southwest Architects, Inc. Duplication or reproduction by any means without the express written consent of Studio Southwest Architects, Inc. is a violation of federal and international law. The information contained in this document is the intellectual property of Studio Southwest Architects, Inc. and all rights thereto are reserved.

CONSULTANTS

Architect Engineer

STATE OF NEW MEXICO
LAURA B. ANDERSON
No. 5528
REGISTERED ARCHITECT

SFC HONDO FIRE STATION

645 OLD LAS VEGAS HIGHWAY
SANTA FE, NM 87505

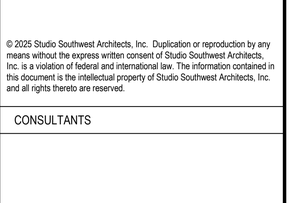

Key Plan NTS

No	Date	Description
		Revision Schedule

ISSUE:	100% CONSTRUCTION DOCUMENTS
PROJECT NUMBER:	2502
FILE:	SSWA_Inc_2025_Template.rte
DRAWN BY:	MA
CHECKED BY:	LA
DATE:	AUGUST 15, 2025

SHEET TITLE

CASEWORK ELEVATIONS AND SECTIONS

A-411

8/19/2025 11:09:07 AM

C:\Users\mangeles\Documents\2502_SFC Hondo Fire Station_mangeles547K3.rvt

GENERAL NOTES

A) COORDINATE WITH MECHANICAL, ELECTRICAL & PLUMBING.

B) REFER TO OVERALL PLANS FOR INFORMATION NOT INDICATED IN ENLARGED PLANS.

C) UNLESS NOTED OTHERWISE, ALL DIMENSIONS ARE TO FACE OF STUD OR BLOCK.

D) ALL INTERIOR FINISH MATERIALS TO COMPLY WITH FIRE RATINGS REQUIRED BY IBC TABLE 803.5.

E) UNLESS NOTED OTHERWISE, PLUMBING LOCATION DIMENSIONS ARE TO CENTERLINE OF FIXTURE.

F) UNLESS NOTED OTHERWISE, LOWER CASEWORK DEPTH IS 2'-0" AND UPPER CASEWORK DEPTH IS 1'-0".

G) REFER TO A-701 FOR MATERIAL SCHEDULE

H) FIELD VERIFY ALL CRITICAL DIMENSIONS.

KEYED NOTES

1 METAL STUD
2 FLUID APPLIED AIR / MOISTURE BARRIER
3 5/8" EXTERIOR SHEATHING
4 EXTERIOR INSULATION FINISH SYSTEM
5 R-9.5 CONTINUOUS RIGID INSULATION
6 CONCRETE SLAB
7 R-10 RIGID INSULATION. EXTEND UNDER SLAB 24" MINIMUM.
8 5/8" GYPSUM BOARD
9 EXISTING WALL
10 BACKER ROD & SEALANT
11 GRADE, SEE CIVIL

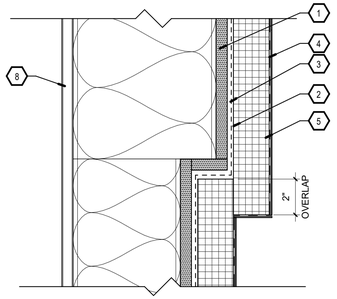

2 METAL STUD TRANSITION
3" = 1'-0"

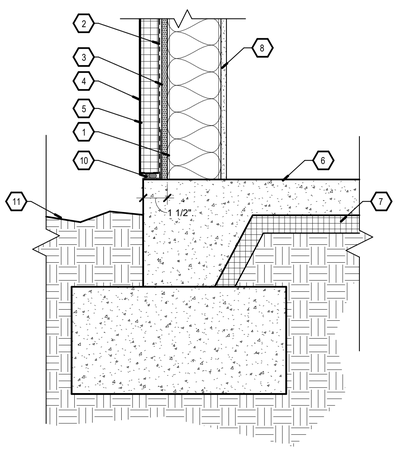

A1 SECTION DETAIL - SILL AT EIFS
SCALE: 1 1/2" = 1'-0"

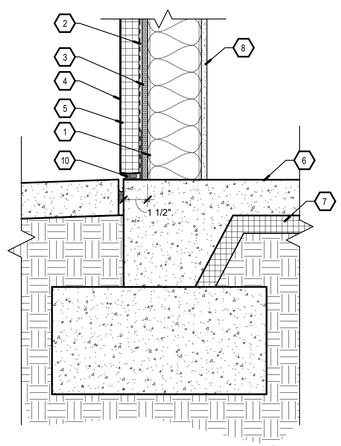

A2 SECTION DETAIL - SILL AT CONCRETE PAVING
SCALE: 1 1/2" = 1'-0"

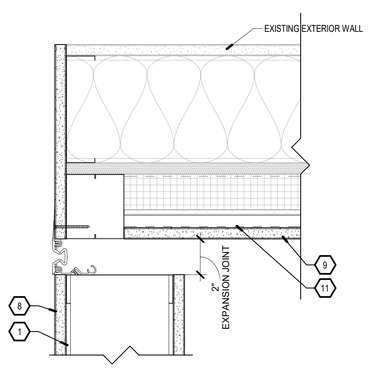

C1 PLAN DETAIL - 2" INTERIOR WALL EXPANSION JOINT
SCALE: 3" = 1'-0"

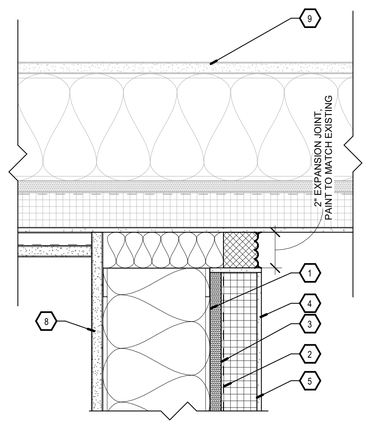

C2 PLAN DETAIL - 2" EXPANSION JOINT FROM STUCCO TO EIFS
SCALE: 3" = 1'-0"

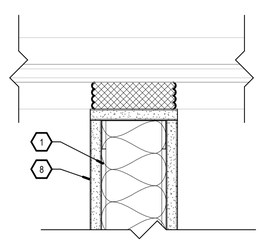

C3 WINDOW INFILL
3" = 1'-0"

STUDIO SW ARCHITECTS
2101 Mountain Road NW Suite B | Albuquerque NM 87104
505-843-9639 | www.studioswarch.com

© 2025 Studio Southwest Architects, Inc. Duplication or reproduction by any means without the express written consent of Studio Southwest Architects, Inc. is a violation of federal and international law. The information contained in this document is the intellectual property of Studio Southwest Architects, Inc. and all rights thereto are reserved.

CONSULTANTS

Architect Engineer

STATE OF NEW MEXICO
LAURA B. ANDERSON
No. 5528
REGISTERED ARCHITECT

SFC HONDO FIRE STATION

645 OLD LAS VEGAS HIGHWAY
SANTA FE, NM 87505



Key Plan NTS

No	Date	Description
Revision Schedule		

ISSUE:	100% CONSTRUCTION DOCUMENTS
PROJECT NUMBER:	2502
FILE:	SSWA_Inc_2025_Template.rte
DRAWN BY:	MA
CHECKED BY:	LA
DATE:	AUGUST 15, 2025

SHEET TITLE

MISCELLANEOUS DETAILS

A-501

8/19/2025 11:09:10 AM

C:\Users\mangeles\Documents\2502_SFC Hondo Fire Station_mangeles547K3.rvt

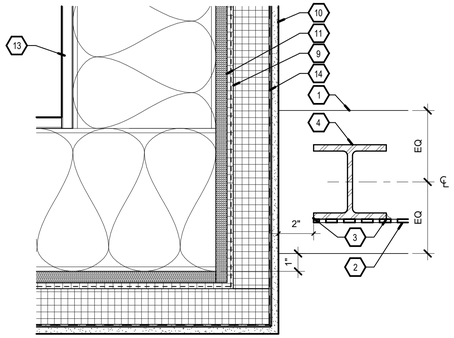

C1 STEEL PANEL - END

SCALE: 3" = 1'-0"

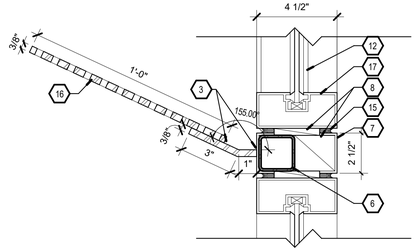

D3 SHADE FIN CONNECTION AT RECTANGULAR MULLION

SCALE: 3" = 1'-0"

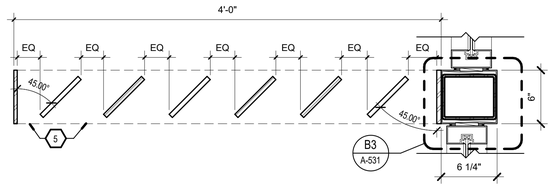

C3 AWNING DETAIL

1 1/2" = 1'-0"

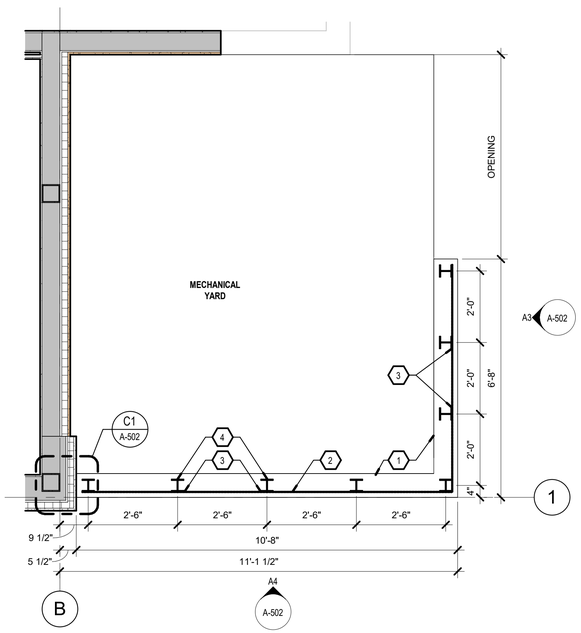

A1 ENLARGED MECHANICAL YARD

1/2" = 1'-0"

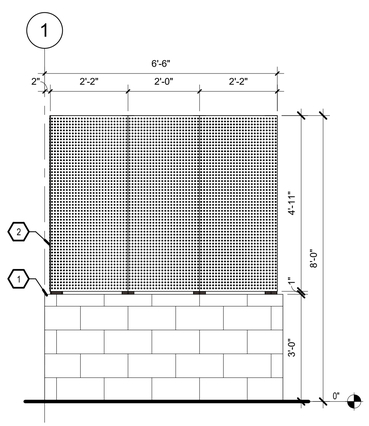

A3 MECHANICAL YARD - EAST

1/2" = 1'-0"

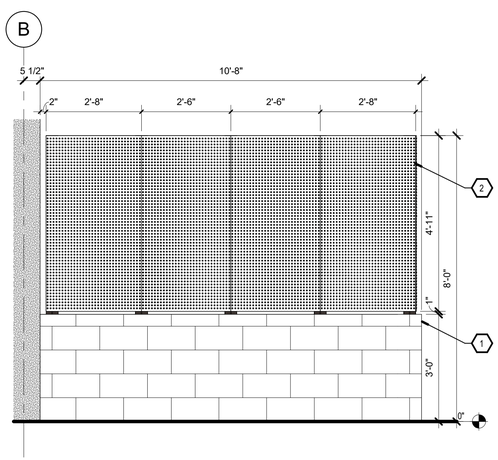

A4 MECHANICAL YARD - SOUTH

SCALE: 1/2" = 1'-0"

KEYED NOTES

1 4" HIGH, CMU TOP CAP
2 1/4" PERFORATED STEEL SCREEN PANEL
3 1" STITCH WELDS @ 6" O.C.
4 STEEL POST, REFER TO STRUCTURAL SHEET 7/S-300.
5 STEEL AWNING, REFER TO STRUCTURAL DRAWING 7/S-502.
6 STEEL HSS FIN SUPPORT, REFER TO STRUCTURAL SHEET 3/S-200.
7 BREAK METAL, COLOR TO MATCH STOREFRONT SYSTEM
8 FIRE RETARDANT TREATED WOOD SHIM / BLOCKING
9 FLUID APPLIED AIR / MOISTURE BARRIER
10 EXTERIOR INSULATION FINISH SYSTEM
11 5/8" EXTERIOR SHEATHING
12 SCHEDULED GLAZING, REFER TO A1/A-601
13 5/8" GYPSUM BOARD
14 R-9.5 CONTINUOUS RIGID INSULATION
15 BACKER ROD & SEALANT
16 3/8" STEEL SHADE FIN
17 STOREFRONT / WINDOW FRAMING SYSTEM, REFER TO A1/A-601

STUDIO SW ARCHITECTS
2101 Mountain Road NW Suite B | Albuquerque NM 87104
505-843-9639 | www.studioswarch.com

© 2025 Studio Southwest Architects, Inc. Duplication or reproduction by any means without the express written consent of Studio Southwest Architects, Inc. is a violation of federal and international law. The information contained in this document is the intellectual property of Studio Southwest Architects, Inc. and all rights thereto are reserved.

CONSULTANTS

Architect Engineer

STATE OF NEW MEXICO
LAURA B. ANDERSON
No. 5528
REGISTERED ARCHITECT

SFC HONDO FIRE STATION

645 OLD LAS VEGAS HIGHWAY
SANTA FE, NM 87505

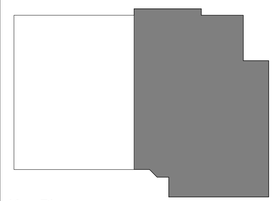

Key Plan NTS

No	Date	Description
Revision Schedule		

ISSUE:	100% CONSTRUCTION DOCUMENTS
PROJECT NUMBER:	2502
FILE:	SSWA_Inc_2025_Template.rte
DRAWN BY:	MA
CHECKED BY:	LA
DATE:	AUGUST 15, 2025

SHEET TITLE

STEEL DETAILS

A-502

8/19/2025 11:09:10 AM
C:\Users\mangeles\Documents\2502_SFC Hondo Fire Station_mangeles547K3.rvt

NOTES:

1. VERTICAL HANGERS- SUSPENSION WIRES SHALL NOT BE SMALLER THAN NO. 12 GAUGE SPACED AT 4' OC OR NO. 10 GAUGE SPACED AT 5' OC ALONG EACH MAIN RUNNER UNLESS CALCULATIONS JUSTIFYING THE INCREASED SPACING ARE PROVIDED. EACH VERTICAL WIRE SHALL BE ATTACHED TO THE CEILING SUSPENSION MEMBER AND TO THE SUPPORT ABOVE WITH A MINIMUM OF THREE TURNS. ANY CONNECTION DEVICE AT THE SUPPORTING CONSTRUCTION SHALL BE CAPABLE OF CARRYING NOT LESS THAN 100 POUNDS. SUSPENSION WIRES SHALL NOT HANG MORE THAN 1-IN-6 OUT OF PLUMB UNLESS COUNTERSLOPING WIRES ARE PROVIDED.
2. PERIMETER HANGERS- THE PERIMETER ENDS OF EACH CROSS RUNNER AND MAIN RUNNER SHALL BE SUPPORTED INDEPENDENTLY A MAX OF 8" FROM EACH WALL OR CEILING DISCONTINUITY WITH NO. 12 GAUGE WIRE OR APPROVED WALL SUPPORT. THESE WIRES SHALL NOT HANG MORE THAN 1-IN-6 OUT OF PLUMB AND MUST BE CONNECTED TO AN ADJACENT WALL OR TO THE STRUCTURE ABOVE.
3. LATERAL FORCE BRACING- WHERE SUBSTANTIAL DESIGN CALCULATIONS ARE NOT PROVIDED, HORIZONTAL RESTRAINTS SHALL BE EFFECTED BY FOUR NO. 12 GAUGE WIRES SECURED TO THE MAIN RUNNER WITHIN 2' OF THE CROSS RUNNER INTERSECTION AND SPLAYED 90 DEG FROM EACH OTHER AT AN ANGLE NOT EXCEEDING 45 DEG FROM THE PLANE OF THE CEILING. A STRUT FASTENED TO THE MAIN RUNNER SHALL BE EXTENDED TO AND FASTENED TO THE STRUCTURAL MEMBERS SUPPORTING THE ROOF OR FLOOR ABOVE. THE STRUT SHALL BE ADEQUATE TO RESIST THE VERTICAL COMPONENT INDUCED BY THE BRACING WIRES. THESE HORIZONTAL RESTRAINT POINTS SHALL BE PLACED 12' OC IN BOTH DIRECTIONS WITH THE FIRST POINT WITHIN 6" FROM EACH WALL. ATTACHMENT OF THE RESTRAINT WIRES TO THE STRUCTURE ABOVE SHALL BE ADEQUATE FOR THE LOAD IMPOSED. LATERAL FORCE BRACING MEMBERS SHALL BE SPACED A MINIMUM OF 6" FROM ALL HORIZONTAL PIPING OR DUCT WORK THAT IS NOT PROVIDED WITH BRACING RESTRAINTS FOR HORIZONTAL FORCES. BRACING WIRES SHALL BE ATTACHED TO THE GRID AND TO THE STRUCTURE IN SUCH A MANNER THAT THEY CAN SUPPORT A DESIGN LOAD OF NOT LESS THAN 200 POUNDS OR THE ACTUAL DESIGN LOAD, WITH A SAFETY FACTOR OF 2, WHICHEVER IS GREATER.
4. PERIMETER MEMBERS- UNLESS PERIMETER MEMBERS ARE A STRUCTURAL PART OF THE APPROVED SYSTEM, WALL ANGLES OR CHANNELS SHALL BE CONSIDERED AS AESTHETIC CLOSURES AND SHALL HAVE NO STRUCTURAL VALUE ASSESSED TO THEMSELVES OR THEIR METHOD OF ATTACHMENT TO THE WALLS. ENDS OF MAIN RUNNERS AND CROSS MEMBERS SHALL BE TIED TOGETHER TO PREVENT THEIR SPREADING.
5. ATTACHMENT OF MEMBERS TO THE PERIMETER- TO FACILITATE INSTALLATION, MAIN RUNNERS AND CROSS RUNNERS MAY BE ATTACHED TO THE PERIMETER MEMBER AT TWO ADJACENT WALLS WITH CLEARANCE BETWEEN THE WALL AND THE RUNNERS MAINTAINED AT THE OTHER TWO WALLS OR AS OTHERWISE SHOWN OR DESCRIBED FOR THE APPROVED SYSTEM.

IBC SEISMIC CATEGORY	IBC SEISMIC INSTALLATION REQUIREMENTS
D	TO BE INSTALLED TO CISCA RECOMMENDATIONS FOR AREAS SUBJECT TO LIGHT TO MODERATE SEISMIC ACTIVITY. -MINIMUM 7/8" WALL MOULDING. -GRID MUST NOT BE ATTACHED TO WALL MOULDING. -MINIMUM 3/8" CLEARANCE ON ALL SIDES. - MINIMUM 3/8" OVERLAP OF GRID ON THE WALL MOLDING. -ENDS OF MAIN BEAMS AND CROSS TEES MUST BE TIED TOGETHER TO PREVENT THEIR SPREADING. -SAFETY WIRES REQUIRED ON LIGHT FIXTURES. NOTE: REQUIREMENTS FOR ESSENTIAL USE FACILITIES MAY BE DIFFERENT.

STRUT SCHEDULE	
EMT SIZE (NOMINAL)	LENGTH (L/r < 200)
1/2"	< 3'-10"
3/4"	< 5'-0"
1"	< 6'-6"
1 1/4"	< 8'-6"
1 1/2"	< 9'-10"

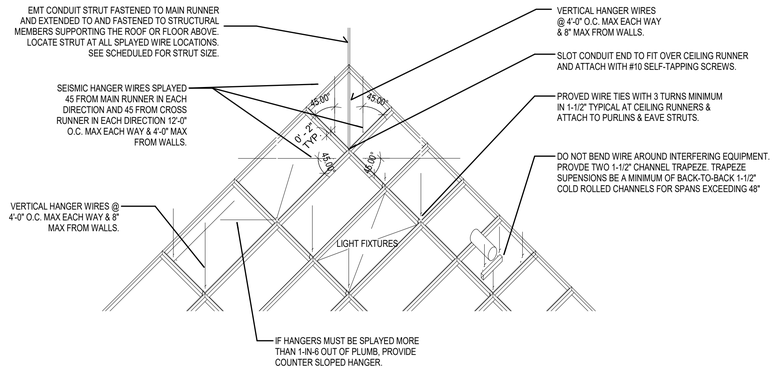

A4 IBC SEISMIC INSTALLATION REQUIREMENTS
1/2" = 1'-0"

KEYED NOTES

1 EXISTING WALL
2 HANGING WIRE
3 EXPANSION JOINT AS NEEDED, RATED AS REQUIRED
4 SUSPENDED CEILING GRID SYSTEM
5 3 5/8" METAL STUD
6 5/8" GYPSUM BOARD
7 6" METAL STUD

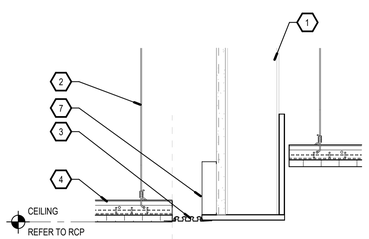

A1 SOFFIT DETAIL @ CORRIDOR
SCALE: 1 1/2" = 1'-0"

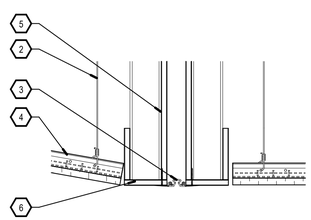

SOFFIT DETAIL @ SLOPED CEILING
A2 SCALE: 1 1/2" = 1'-0"

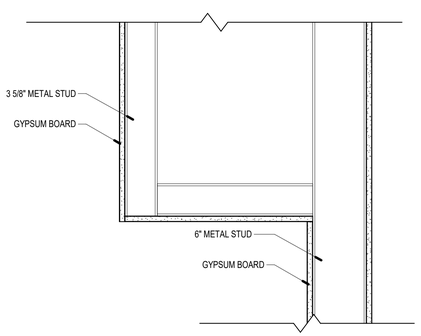

A3 SOFFIT DETAIL
1 1/2" = 1'-0"

STUDIO SW ARCHITECTS
2101 Mountain Road NW Suite B | Albuquerque NM 87104
505-843-9639 | www.studioswarch.com

© 2025 Studio Southwest Architects, Inc. Duplication or reproduction by any means without the express written consent of Studio Southwest Architects, Inc. is a violation of federal and international law. The information contained in this document is the intellectual property of Studio Southwest Architects, Inc. and all rights thereto are reserved.

CONSULTANTS

Architect Engineer

STATE OF NEW MEXICO
LAURA B. ANDERSON
No. 5528
REGISTERED ARCHITECT

SFC HONDO FIRE STATION

645 OLD LAS VEGAS HIGHWAY
SANTA FE, NM 87505

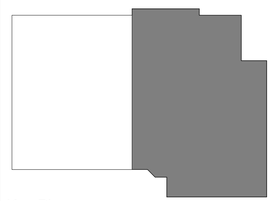

Key Plan NTS

No	Date	Description
Revision Schedule		

ISSUE:	100% CONSTRUCTION DOCUMENTS
PROJECT NUMBER:	2502
FILE:	SSWA_Inc_2025_Template.rte
DRAWN BY:	MA
CHECKED BY:	LA
DATE:	AUGUST 15, 2025

SHEET TITLE
CEILING DETAILS

A-511

8/19/2025 11:09:11 AM

C:\Users\mangeles\Documents\2502_SFC Hondo Fire Station_mangeles547K3.rvt

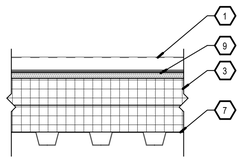

A1 TYPICAL ROOF ASSEMBLY
1 1/2" = 1'-0"

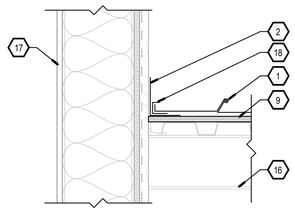

D2 ROOF AT EXISTING WALL
1 1/2" = 1'-0"

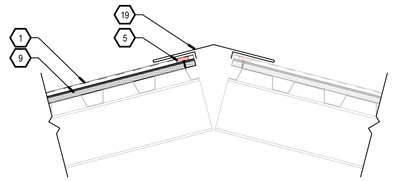

D3 METAL ROOF RIDGE
1 1/2" = 1'-0"

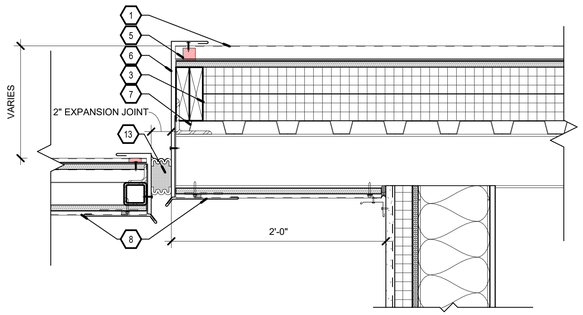

C1 EAVES SECTION DETAIL
1 1/2" = 1'-0"

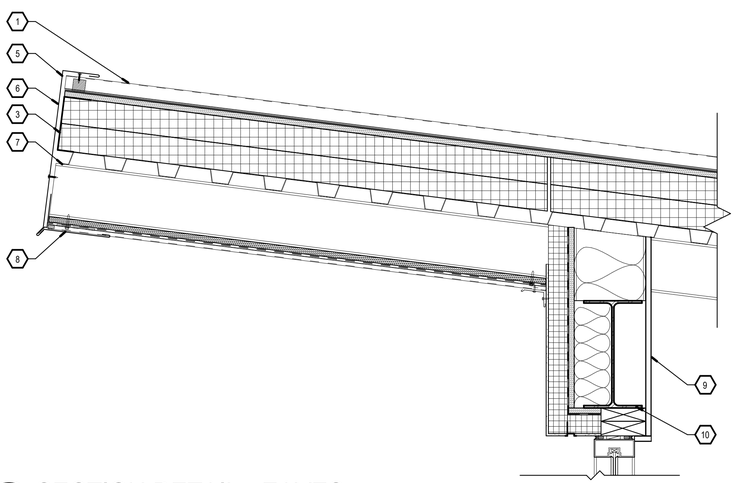

C3 SECTION DETAIL - EAVES
1 1/2" = 1'-0"

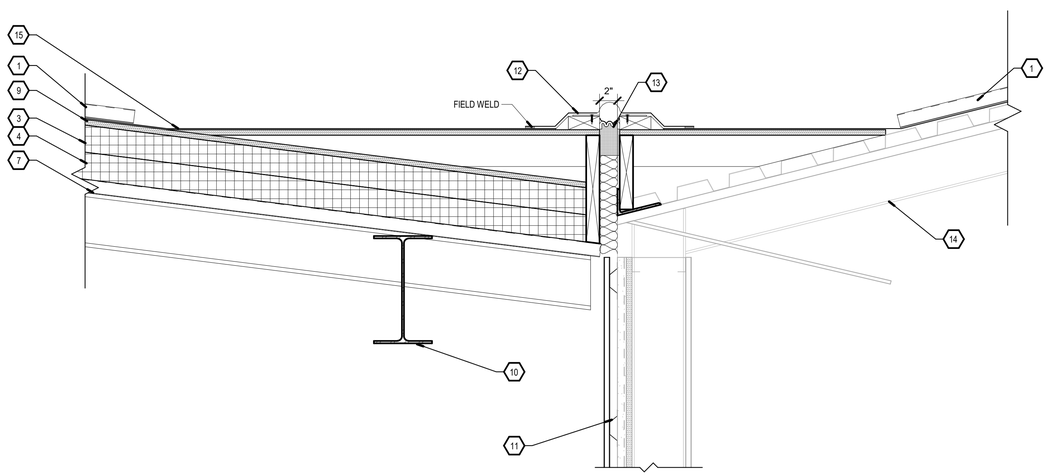

A3 SECTION DETAIL - ROOF CRICKET
1 1/2" = 1'-0"

KEYED NOTES

1 STANDING SEAM METAL ROOF
2 MEMBRANE FLASHING.
3 (2) LAYERS, STAGGERED, R-15 POLYISOCYANURATE INSULATION = R-30 TOTAL
4 5/8" EXTERIOR SHEATHING
5 TAPE SEALANT
6 EAVE FLASHING
7 1 1/2" TYPE 'B' METAL DECK
8 METAL PANEL SOFFIT
9 1/2" GYPSUM COVER BOARD
10 NEW STRUCTURAL BEAM, REFER TO STRUCTURAL
11 FURRING CHANNEL
12 ROOFING PLATE & FASTENER
13 2" COMPRESSION EXPANSION JOINT W/ SILICON BELLOWS
14 EXISTING ROOF STRUCTURE
15 80 MIL TPO MEMBRANE
16 EXISTING METAL DECK AND STRUCTURE.
17 EXISTING WALL SYSTEM.
18 J-CHANNEL
19 RIDGE FLASHING

STUDIO SW ARCHITECTS
2101 Mountain Road NW Suite B | Albuquerque NM 87104
505-843-9639 | www.studioswarch.com

© 2025 Studio Southwest Architects, Inc. Duplication or reproduction by any means without the express written consent of Studio Southwest Architects, Inc. is a violation of federal and international law. The information contained in this document is the intellectual property of Studio Southwest Architects, Inc. and all rights thereto are reserved.

CONSULTANTS

Architect Engineer

STATE OF NEW MEXICO
LAURA B. ANDERSON
No. 5528
REGISTERED ARCHITECT

SFC HONDO FIRE STATION

645 OLD LAS VEGAS HIGHWAY
SANTA FE, NM 87505

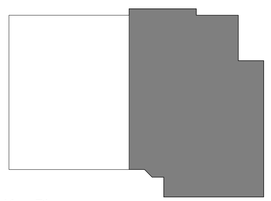

Key Plan NTS

No	Date	Description
Revision Schedule		

ISSUE:	100% CONSTRUCTION DOCUMENTS
PROJECT NUMBER:	2502
FILE:	SSWA_Inc_2025_Template.rte
DRAWN BY:	MA
CHECKED BY:	LA
DATE:	AUGUST 15, 2025

SHEET TITLE

ROOF DETAILS

A-521

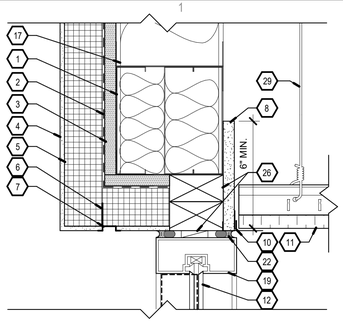

HEAD DETAIL - TYPICAL EXTERIOR STOREFRONT

D1 SCALE: 3" = 1'-0"

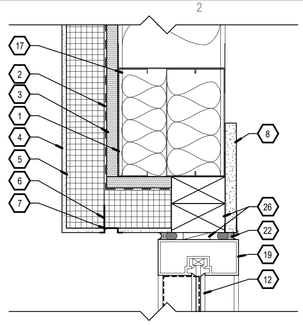

HEAD DETAIL - EXTERIOR STOREFRONT

D2 SCALE: 3" = 1'-0"

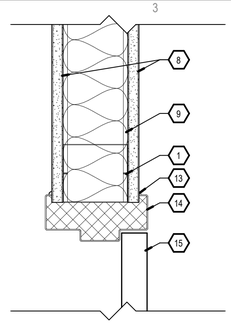

HEAD DETAIL - INTERIOR HOLLOW METAL DOOR

D3 SCALE: 3" = 1'-0"

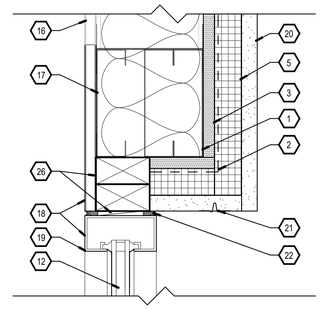

HEAD DETAIL - EXISTING WALL

D4 SCALE: 3" = 1'-0"

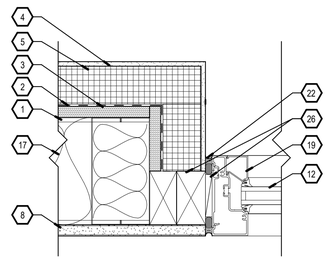

JAMB DETAIL - TYPICAL EXTERIOR STOREFRONT

C1 SCALE: 3" = 1'-0"

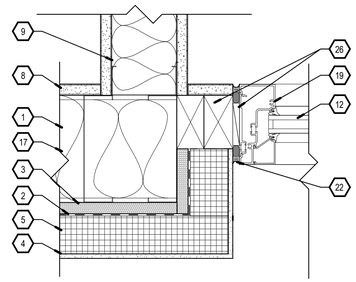

JAMB DETAIL - EXTERIOR STOREFRONT

C2 SCALE: 3" = 1'-0"

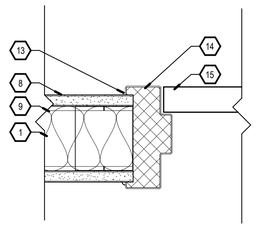

JAMB DETAIL - INTERIOR HOLLOW METAL DOOR

C3 SCALE: 3" = 1'-0"

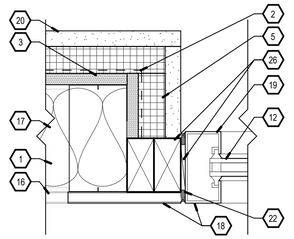

JAMB DETAIL - EXIST. WALL

C4 SCALE: 3" = 1'-0"

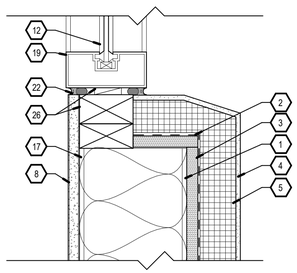

SILL DETAIL - TYPICAL EXTERIOR STOREFRONT

B1 SCALE: 3" = 1'-0"

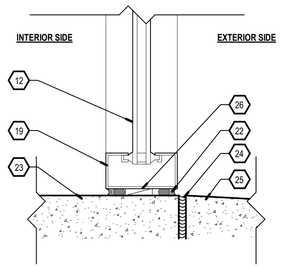

SILL DETAIL - EXTERIOR STOREFRONT AT PAVING

B2 SCALE: 3" = 1'-0"

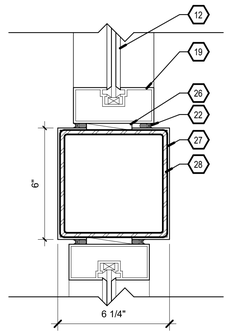

HEAD DETAIL - STOREFRONT AT BREAK METAL

B3 SCALE: 3" = 1'-0"

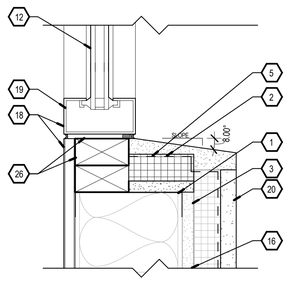

SILL DETAIL - EXIST. WALL

B4 SCALE: 3" = 1'-0"

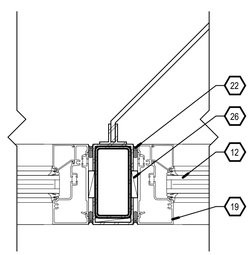

JAMB DETAIL - STEEL FIN CONNECTION 2

A1 SCALE: 3" = 1'-0"

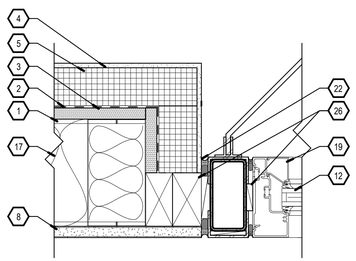

JAMB DETAIL - STEEL FIN CONNECTION

A2 SCALE: 3" = 1'-0"

KEYED NOTES

1 METAL STUD
2 FLUID APPLIED AIR / MOISTURE BARRIER
3 5/8" EXTERIOR SHEATHING
4 EXTERIOR INSULATION FINISH SYSTEM
5 R-9.5 CONTINUOUS RIGID INSULATION
6 WRAP REINFORCING MESH 2" MIN. AT BACKSIDE OF INSULATION. DO NOT PLUG DRAINAGE STRIP WITH BASECOAT
7 ALUMINUM DRIP EDGE
8 5/8" GYPSUM BOARD
9 ACOUSTICAL BATT INSULATION
10 SUSPENSION WALL ANGLE
11 SUSPENDED ACOUSTIC CEILING PANEL
12 SCHEDULED GLAZING, REFER TO A1/A-601
13 CONTINUOUS SEALANT, EACH SIDE
14 HOLLOW METAL FRAME, FILLED WITH FOAM. REFER TO A-601
15 DOOR AS SCHEDULED, REFER TO A-601
16 EXISTING WALL
17 R-13 MIN. UNFACED ACOUSTICAL BATT INSULATION
18 ALIGN FACES
19 STOREFRONT / WINDOW FRAMING SYSTEM, REFER TO A1/A-601
20 STUCCO
21 STUCCO CONTROL JOINT USED AS DRIP EDGE. LOCATE AT INSULATION JOINT
22 BACKER ROD & SEALANT
23 CONCRETE SLAB
24 EXPANSION JOINT
25 CONCRETE SIDEWALK, SLOPED AWAY FROM BUILDING.
26 FIRE RETARDANT TREATED WOOD SHIM / BLOCKING
27 BREAK METAL. COLOR TO MATCH STOREFRONT SYSTEM
28 STRUCTURAL BEAM, REFER TO STRUCTURAL
29 HANGING WIRE

STUDIO SW ARCHITECTS
2101 Mountain Road NW Suite B | Albuquerque NM 87104
505-843-9639 | www.studioswarch.com

© 2025 Studio Southwest Architects, Inc. Duplication or reproduction by any means without the express written consent of Studio Southwest Architects, Inc. is a violation of federal and international law. The information contained in this document is the intellectual property of Studio Southwest Architects, Inc. and all rights thereto are reserved.

CONSULTANTS

Architect Engineer

STATE OF NEW MEXICO
LAURA B. ANDERSON
No. 5528
REGISTERED ARCHITECT

SFC HONDO FIRE STATION

645 OLD LAS VEGAS HIGHWAY
SANTA FE, NM 87505

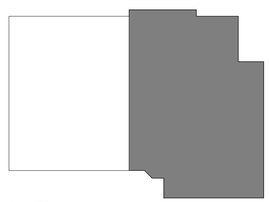

Key Plan NTS

No	Date	Description
		Revision Schedule

ISSUE:	100% CONSTRUCTION DOCUMENTS
PROJECT NUMBER:	2502
FILE:	SSWA_Inc_2025_Template.rte
DRAWN BY:	MA
CHECKED BY:	LA
DATE:	AUGUST 15, 2025

SHEET TITLE

DOOR & WINDOW DETAILS

A-531

8/19/2025 11:09:11 AM

C:\Users\mangeles\Documents\2502_SFC Hondo Fire Station_mangeles547K3.rvt

8/19/2025 11:09:12 AM

C:\Users\mangeles\Documents\2502_SFC Hondo Fire Station_mangeles547K3.rvt

DOOR SCHEDULE

DOOR NUMBER	ROOM NAME	DOOR						FRAME			HARDWARE	COMMENTS
		WIDTH	HEIGHT	THICKNESS	PAIR	TYPE	GLASS TYPE	TYPE	MATERIAL	FINISH		
160		3'-0"	7'-0"		-	FG-1	IT	1	ALUM	ANNOD		
161A	CLASSROOM	3'-0"	7'-0"	1 3/4"	-	NL	T	1	HM	PAINT		
161B	STOR.	5'-8"	6'-8"	1 3/4"	PAIR	F	N/A	1	HM	PAINT		
162A	WORKOUT ROOM	6'-0"	7'-0"	1 3/4"	PAIR	F	N/A	1	HM	PAINT		
162B	CORRIDOR	3'-0"	7'-0"	1 3/4"	-	NL	T	1	HM	PAINT		
165A	BEDROOM	3'-0"	7'-0"	1 3/4"	-	F	N/A	1	HM	PAINT		
166A	CORRIDOR	3'-0"	7'-0"	1 3/4"	-	F	N/A	1	HM	PAINT		
167	CORRIDOR	3'-0"	7'-0"	1 3/4"	-	F	N/A	1	HM	PAINT		
168A		3'-0"	6'-11"		-	FG-1	IT	1	ALUM	ANNOD		
168B	STOR.	6'-0"	7'-0"	1 3/8"	PAIR	H	N/A	1	HM			
168C	DAYROOM	3'-0"	7'-0"	1 3/4"	-	NL	T	1	HM	PAINT		
169	MEN'S	2'-10"	7'-0"	1 3/4"	-	F	N/A	1	HM	PAINT		
170	WOMEN'S	2'-10"	7'-0"	1 3/4"	-	F	N/A	1	HM	PAINT		
171	Room	3'-0"	7'-0"	1 3/4"	-	FG	T	1	HM	PAINT		
172	LAUNDRY	3'-0"	7'-0"	1 3/4"	-	FG	T	1	HM	PAINT		
174	Room	2'-6"	7'-0"	1 3/4"	-	140						
175	Room	2'-6"	7'-0"	1 3/4"	-	140						

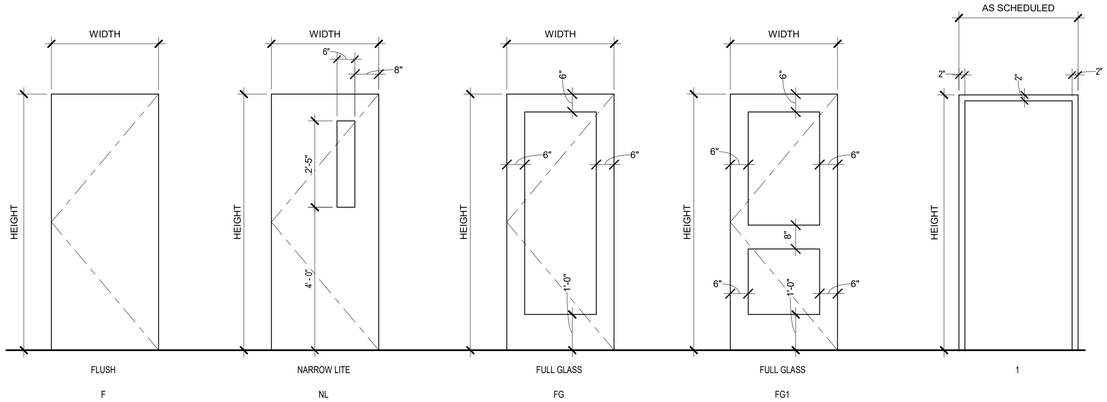

C2 DOOR AND FRAME TYPES

1/2" = 1'-0"

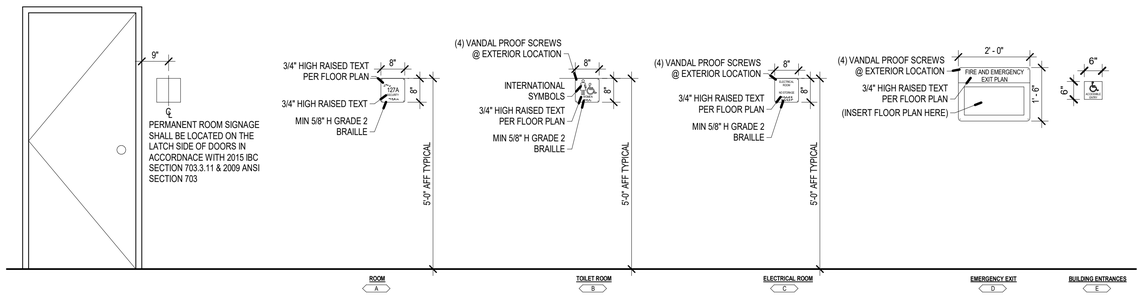

B2 SIGN TYPES

1/2" = 1'-0"

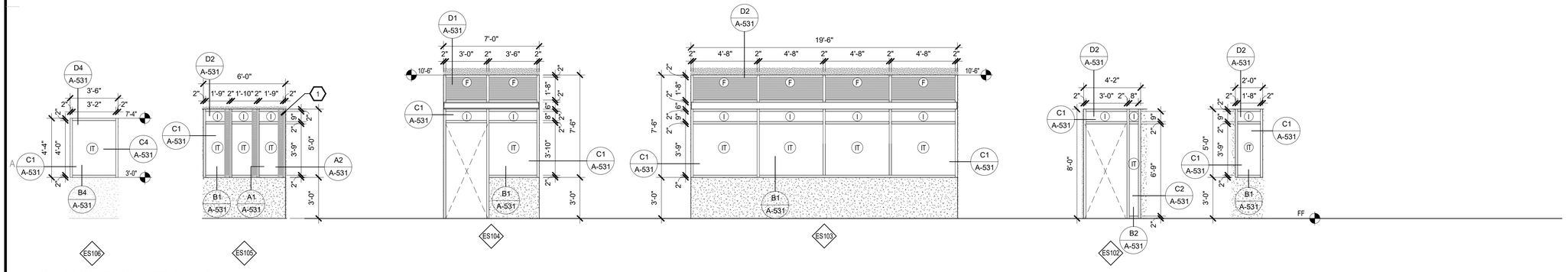

A1 WINDOW TYPES

SCALE: 1/4" = 1'-0"

GENERAL NOTES

A. ALL INTERIOR GLAZING TO BE SINGLE PANE GLAZING, UNLESS NOTED OTHERWISE

B. FIELD VERIFY ALL ROUGH OPENING DIMENSIONS PRIOR TO FABRICATION

C. COORDINATE CRITICAL DIMENSIONS WITH MANUFACTURER

D. ALL DATUM HEIGHTS ARE ASSOCIATED WITH INTERIOR FIRST FLOOR LEVEL.

E. ALL EXTERIOR STOREFRONT FRAMING SHALL HAVE THERMAL BREAK.

KEYED NOTES

1 1/4" STEEL PANEL SHADE FINS

LEGEND - GLAZING TYPES

I	INSULATED GLAZING
T	TEMPERED GLAZING
IT	INSULATED TEMPERED GLAZING
F	INSULATED FRITTED GLAZING (40% OPACITY)
ISxxx	INTERIOR STOREFRONT
ESxxx	EXTERIOR STOREFRONT

SIGN NOTES

A. ALL SIGNS SHALL HAVE BOTH RAISED LETTERS AND BRAILLE MESSAGES, UPPERCASE CHARACTERS. ALL SIGNS SHALL COMPLY WITH ICC 1117.1 2009 CHAPTER 7. ALL BRAILLE COMPONENTS SHALL BE AN INTEGRAL PART OF THE SIGN. APPLIED STRIPS ARE NOT ACCEPTABLE.

B. COLORS SHALL BE AS SELECTED BY THE ARCHITECT.

STUDIO SW ARCHITECTS
2101 Mountain Road NW Suite B | Albuquerque NM 87104
505-843-9639 | www.studioswarch.com

© 2025 Studio Southwest Architects, Inc. Duplication or reproduction by any means without the express written consent of Studio Southwest Architects, Inc. is a violation of federal and international law. The information contained in this document is the intellectual property of Studio Southwest Architects, Inc. and all rights thereto are reserved.

CONSULTANTS

Architect Engineer

STATE OF NEW MEXICO
LAURA B. ANDERSON
No. 5528
REGISTERED ARCHITECT

SFC HONDO FIRE STATION

645 OLD LAS VEGAS HIGHWAY
SANTA FE, NM 87505

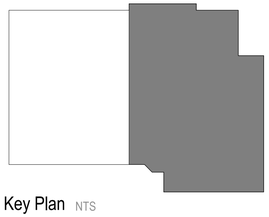

Key Plan NTS

No	Date	Description
Revision Schedule		

ISSUE:	100% CONSTRUCTION DOCUMENTS
PROJECT NUMBER:	2502
FILE:	SSWA_Inc_2025_Template.rte
DRAWN BY:	MA
CHECKED BY:	LA
DATE:	AUGUST 15, 2025

SHEET TITLE

DOOR SCHEDULE, DOOR & FRAME TYPES, SIGN TYPES

A-601

8/19/2025 11:09:13 AM
C:\Users\mangeles\Documents\2502_SFC Hondo Fire Station_mangeles547K3.rvt

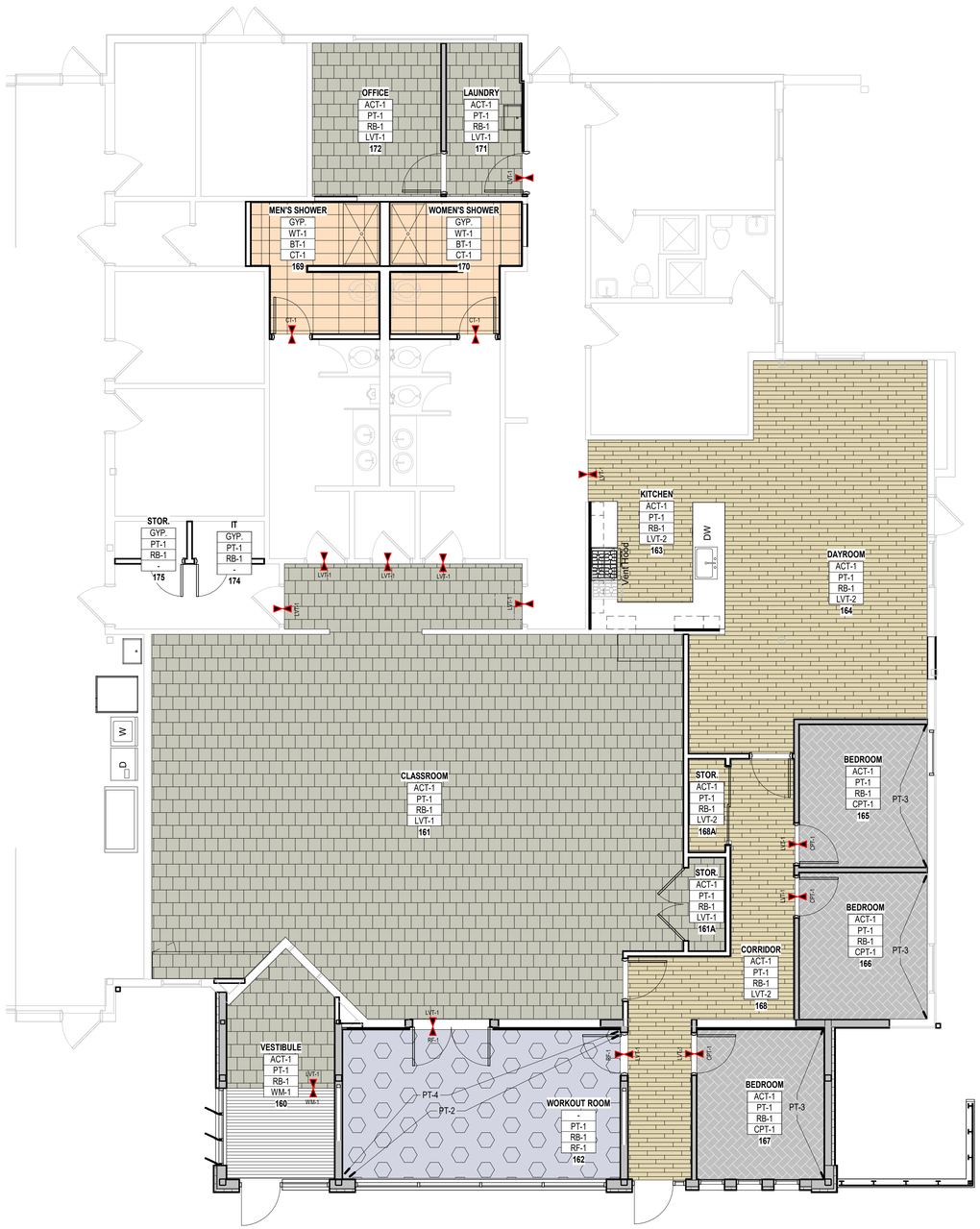

A1 1ST FLOOR - FLOOR FINISH PLAN
3/16" = 1'-0"

GENERAL NOTES

A. COORDINATE WITH MECHANICAL, ELECTRICAL & PLUMBING.

B. REFER TO OVERALL PLANS FOR INFORMATION NOT INDICATED IN ENLARGED PLANS.

C. ALL INTERIOR FINISH MATERIALS TO COMPLY WITH FIRE RATINGS REQUIRED BY IBC TABLE 803.5.

D. FIELD VERIFY ALL CRITICAL DIMENSIONS.

E. HATCHED AREAS SHOW MATERIAL FINISH LOCATION AND ORIENTATIONS ONLY. FOR TILE SIZE, CARPET SIZE, COLOR AND MANUFACTURER, SEE MATERIAL FINISH SCHEDULE.

F. PROVIDE DEMONSTRATION WALL OF EACH PAINT SPECIFIED FOR APPROVAL PRIOR TO INSTALLATION.

G. GROUT LINES SHALL ALIGN AND BE SEALED IN ALL FLOOR AND WALL TILE APPLICATIONS PER MANUFACTURER'S RECOMMENDATION.

H. FURNITURE THAT IS SHOWN IS A BASIS OF DESIGN. FURNITURE PACKAGE IS TO BE COORDINATED WITH CONTRACTOR, SANTA FE COUNTY, CREATIVE INTERIORS AND ARCHITECT.

LEGEND

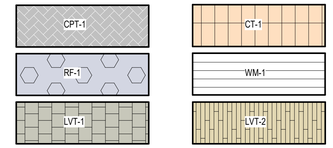

ROOM
CEILING
WALL
BASE
FLOOR
RM #

BASIS OF DESIGN MATERIALS LEGEND

EXTERIOR WALL FINISHES

TAG	DESCRIPTION	PRODUCT MANUFACTURER	STYLE	COLOR	FINISH	SIZE	SPEC...
PT-2	EXTERIOR PAINT						
PT-3	EXTERIOR PAINT						
AL-1	ALUMINUM SOFFIT	LONGBOARD	TONGUE &...	LIGHT...	WOOD...	12' LENGTH	

EXTERIOR GLAZING FINISHES

TAG	DESCRIPTION	PRODUCT MANUFACTURER	STYLE	COLOR	FINISH	SIZE	SPEC...
GLAZ-1							

EXTERIOR ROOF FINISHES

TAG	DESCRIPTION	PRODUCT MANUFACTURER	STYLE	COLOR	FINISH	SIZE	SPEC...
GM-1	STANDING SEAM ROOF	CENTRIA	SDP 175	DEEP BLUE...	GALVANI...	16" WIDTH	

CEILING FINISHES

TAG	DESCRIPTION	PRODUCT MANUFACTURER	STYLE	COLOR	FINISH	SIZE	SPEC...
ACT-1	ACOUSTICAL CEILING TILE	ROCKFON	ARTIC SL	WHITE		24" X 48"	

INTERIOR WALL FINISHES

TAG	DESCRIPTION	PRODUCT MANUFACTURER	STYLE	COLOR	FINISH	SIZE	SPEC...
TC-1	ACOUSTICAL PANELS	ARMSTRONG BUILDING...	TECTUM	NATURAL		24" X 48"	
WT-1	WALL TILE	DALTILE	HADDONSTONE	PEONY	PORCEL...	RECTANGLE...	
PT-1	PAINT	SHERWIN WILLIAMS	EGRET WHITE	SW7570	SATIN		
PT-2	PAINT	SHERWIN WILLIAMS	TIN LIZZIE	SW 9163	SATIN		
PT-3	PAINT	SHERWIN WILLIAMS	DOWN POUR	SW 6516	SATIN		
PT-4	PAINT	SHERWIN WILLIAMS	ANTIQUE RED	SW 7587	SATIN		

BASE FINISHES

TAG	DESCRIPTION	PRODUCT MANUFACTURER	STYLE	COLOR	FINISH	SIZE	SPEC...
BT-1	BASE TILE	DALTILE				4" HIGH	
RB-1	RUBBER BASE	ROPPEE	4" COVE BASE 700...	BLACK		4"HIGH	

FLOOR FINISHES

TAG	DESCRIPTION	PRODUCT MANUFACTURER	STYLE	COLOR	FINISH	SIZE	SPEC...
SC-1	SEALED CONCRETE						
CPT-1	CARPET TILE	SHAW CONTRACT	EARTHING TILE	LEATHER		24" X 24"	
LVT-1	LUXURY VINYL TILE	ARMSTRONG	NATURAL...	BRACO...	LVT	12" X 24"	
LVT-2	LUXURY VINYL TILE	ARMSTRONG	DUO	PINA COLADA	LVT	6" X 36"	
CT-1	CERAMIC TILE	SHAW CONTRACT	RADIANT GLEAM	RADIATE	MATTE	12" X 24"	
WM-1	WALK-OFF MATT	SHAW CONTRACT	WELCOME II	BLACK...		24" X 24"	
RF-1	RUBBER FLOORING	MONDO	SPORT IMPACT	DARK BLUE		36" X 36"	

CASEWORK FINISHES

TAG	DESCRIPTION	PRODUCT MANUFACTURER	STYLE	COLOR	FINISH	SIZE	SPEC...
PL-1	PLASTIC LAMINATE	WILSON ART	LAMINATE 335	GRANVILLE...	SILKEN...	3" X 5"	
SS-1	SOLID SURFACE	SOLID SURFACE	LG HI-MACS	ANDROMEDA		30" X 145'	

STUDIO SW ARCHITECTS
2101 Mountain Road NW Suite B | Albuquerque NM 87104
505-843-9639 | www.studioswarch.com

© 2025 Studio Southwest Architects, Inc. Duplication or reproduction by any means without the express written consent of Studio Southwest Architects, Inc. is a violation of federal and international law. The information contained in this document is the intellectual property of Studio Southwest Architects, Inc. and all rights thereto are reserved.

CONSULTANTS

Architect Engineer

STATE OF NEW MEXICO
LAURA B. ANDERSON
No. 5528
REGISTERED ARCHITECT

SFC HONDO FIRE STATION

645 OLD LAS VEGAS HIGHWAY
SANTA FE, NM 87505



Key Plan NTS

No	Date	Description
		Revision Schedule

ISSUE:	100% CONSTRUCTION DOCUMENTS
PROJECT NUMBER:	2502
FILE:	SSWA_Inc_2025_Template.rte
DRAWN BY:	MA
CHECKED BY:	LA
DATE:	AUGUST 15, 2025

SHEET TITLE
FIRST FLOOR FINISH PLAN

A-701

8/14/2025 12:08:46 PM
Z:\Projects 2025\25006 Hondo-SF Fire Station Remodel\Cadd\Drawings\25006_FP-101.dwg

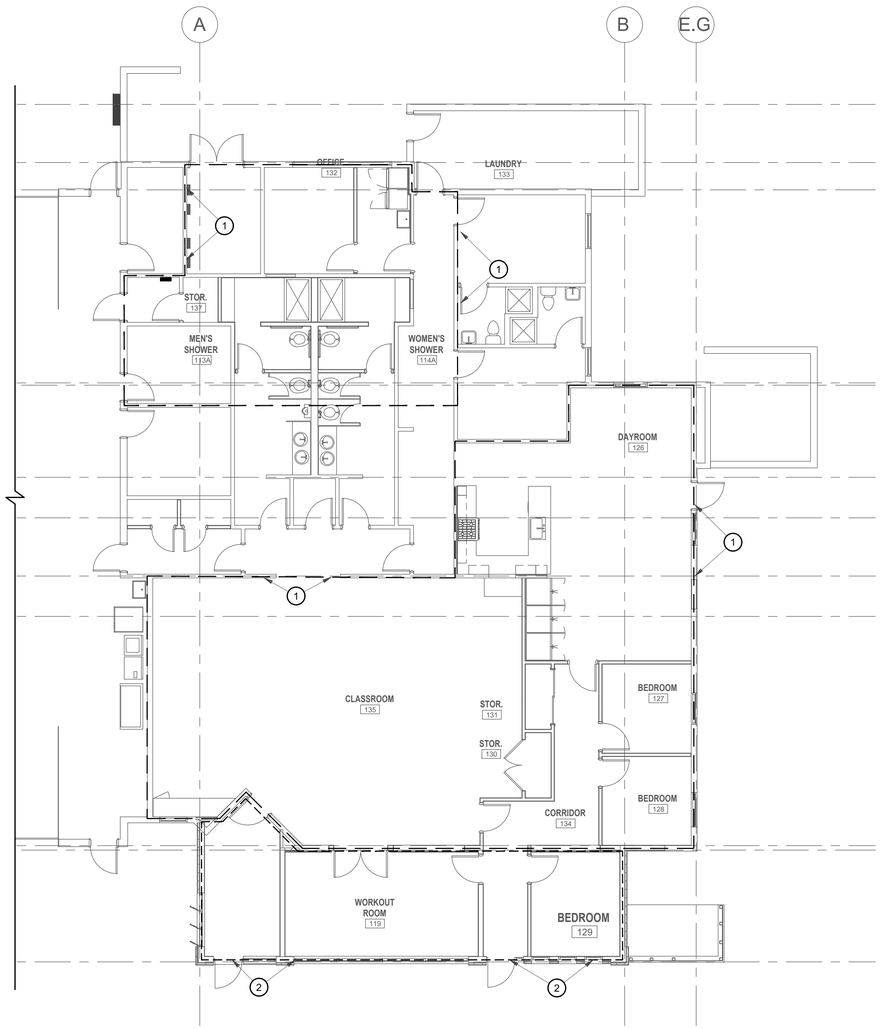

DOMESTIC WATER PLAN

SCALE: 1/8" = 1'-0"

N

GENERAL NOTES

A. REFER TO SHEET P-501 FOR DETAILS.

B. REFER TO SHEET P-001 FOR GENERAL NOTES, LEGEND & SCHEDULES.

KEYED NOTES

1. CONTRACTOR TO MODIFY THE EXISTING FIRE SPRINKLER SYSTEM TO MEET NFPA 13 AND CURRENT FIRE CODE.
2. CONTRACTOR TO EXTEND NEW FIRE PROTECTION SYSTEM FROM NEW AREA NEW FIRE SPRINKLER SYSTEM TO MEET NFPA 13 AND CURRENT FIRE CODE. CONTRACTOR SHALL PROVIDE AND PLAN IDENTIFYING ALL POINTS OF CONNECTION BETWEEN THE NEW SPRINKLER SYSTEM AND THE OLD REMAINING SYSTEM. THIS PLAN SHALL BE SUBMITTED WITH FIRE SPRINKLER SYSTEM SUBMITTAL FOR OWNER AND ENGINEER REVIEW.

STUDIO SW ARCHITECTS
2101 Mountain Road NW Suite B | Albuquerque NM 87104
505-843-9639 | www.studioswarch.com

© 2021 Studio Southwest Architects, Inc. Duplication or reproduction by any means without the express written consent of Studio Southwest Architects, Inc. is a violation of federal and international law. The information contained in this document is the intellectual property of Studio Southwest Architects, Inc. and all rights thereto are reserved.

CONSULTANTS

TESTUDO ENGINEERING
7007 Wyoming Blvd NE Suite E-1
Albuquerque, NM 87109
WWW.TESTUDOENG.COM PH:505-554-1282
2506

Architect Engineer

WAYNE A. YEVOLI
STATE OF NEW MEXICO
23914
REGISTERED PROFESSIONAL ENGINEER
08/14/2025

SFC HONDO FIRE STATION

645 OLD LAS VEGAS HIGHWAY
SANTA FE, NM 87505

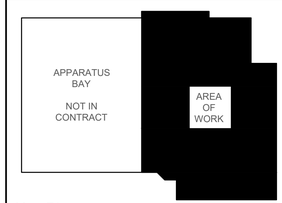

Key Plan NTS

No	Date	Description
Revision Schedule		

ISSUE:	100% CONSTRUCTION DOCUMENTS
PROJECT NUMBER:	2502
FILE:	25006_FP-101.dwg
DRAWN BY:	NS
CHECKED BY:	DCG
DATE:	AUGUST 14, 2025

SHEET TITLE

FIRE PROTECTION

FP-101

8/14/2025 12:08:49 PM

Z:\Projects 2025\25006 Hondo-SF Fire Station Remodel\Cadd\Drawings\25006_P-001.dwg

PLUMBING SYMBOL LEGEND

NOTES

1. ALL SYMBOLS, ABBREVIATIONS, AND DESIGNATIONS ON LEGEND SHEET ARE NOT NECESSARILY USED ON THIS PROJECT.
2. THIS DRAWING SET CONSISTS OF DATA GENERATED, IN PART, BY OTHER PARTIES. NOT ALL SYMBOLOGIES AND NOTATION CONVENTIONS OCCURRING IN THIS DRAWING SET ARE NECESSARILY DEFINED ON THESE LEGENDS. CONSULT THE ENGINEER IN THE EVENT SYMBOLOGY OR NOTATION INTERPRETATION IS REQUIRED.

ABBR.	SYMBOL	DESCRIPTION	ABBR.	SYMBOL	DESCRIPTION
		KEYED NOTES	VTR		VENT THRU ROOF
		EQUIPMENT DESIGNATION			RISER DOWN
		DEMOLISHED ITEM			RISER UP
(E)		EXISTING			VALVE IN RISER
(TYP)		TYPICAL			DROP
BTU		BRITISH THERMAL UNITS			RISER UP
CFH		CUBIC FEET PER HOUR	HB		HOSE BIBB / WALL HYDRANT
CFM		CUBIC FEET PER MINUTE			PIPE GUIDE
DIA	Ø	DIAMETER			DIRECTION OF FLOW
ELV		ELEVATION			SHUT OFF (BALL, GATE, BUTTERFLY)
ESP		EXTERNAL STATIC PRESSURE			GLOBE VALVE
EWT		ENTERING WATER TEMPERATURE			CHECK VALVE
°F		DEGREES FAHRENHEIT			PLUG VALVE
FCO		FLOOR CLEAN OUT			BALANCING VALVE
FFE		FINISH FLOOR ELEVATION			TEMPERATURE CONTROL VALVE (2-WAY)
GPH		GALLONS PER HOUR			TEMPERATURE CONTROL VALVE (3-WAY)
HP		HORSE POWER			PRESSURE REDUCING VALVE
INV		INVERT ELEVATION			SOLENOID VALVE
LWT		LEAVING WATER TEMPERATURE			DOUBLE CHECK BACKFLOW PREVENTER
NA		NOT APPLICABLE			RELIEF VALVE
NC		NORMALLY CLOSED			UNION
NO		NORMALLY OPEN			FLANGED CONNECTION
PH		PHASE			PIPE ANCHOR
PSIG		POUNDS PER SQUARE INCH			SAFETY RELIEF VALVE
R		REGISTER WITH OBD			PRESSURE GAUGE WITH PIG TAIL AND COCK
SP		STATIC PRESSURE			THERMOMETER
		POINT OF CONNECTION			STRAINER WITH BLOW-OFF VALVE
		CAP ON END OF PIPE			SHOCK ABSORBER
		CONTINUATION OF PIPE			FLOW SWITCH
		BUTTERFLY VALVE			FLOOR DRAIN
		BALL VALVE			FLOOR SINK
WCO		WALL CLEANOUT			

PLUMBING PIPING DESIGNATION

ABBR.	SYMBOL	DESCRIPTION	ABBR.	SYMBOL	DESCRIPTION
CW		COLD WATER LINE	GV	GV	GREASE VENT
HW		HOT WATER LINE	GW	GW	GREASE WASTE PIPE
V		VENT PIPING	HWR	HWR	HOT WATER RETURN PIPING - COPPER TYPE "L"
AW	AW	ACID WASTE PIPE	HWS	HWS	HOT WATER SUPPLY PIPING - COPPER TYPE "L"
AV	AV	ACID VENT PIPE	LPG	LPG	LIQUID PROPANE GAS
CA	CA	COMPRESSED AIR	MU	MU	MAKE-UP WATER PIPING
CWR	CWR	COLD WATER RETURN	NPW	NPW	NON POTABLE WATER PIPING
CWS	CWS	COLD WATER SUPPLY	OFL	OFL	OVERFLOW PIPING
F	F	FIRE PROTECTION/LINE	S	S	SANITARY SEWER OR WASTE LINE
G	G	NATURAL GAS PIPING	W	W	COLD WATER SUPPLY

SITE UTILITY SYMBOLS

ABBR.	SYMBOL	DESCRIPTION
F	F	FIRE PROTECTION/LINE
G	G	NATURAL GAS PIPING
IRR	IRR	IRRIGATION
S	S	SANITARY SEWER OR WASTE LINE
SD	SD	STORM DRAIN
W	W	COLD WATER SUPPLY
		VALVE WITH VALVE BOX
		FIRE HYDRANT
		FIRE DEPARTMENT INLET CONNECTION
		THRUST BLOCK
	X X X	FENCING
		POWER POLE / LIGHT POLE
MH	S MH	SANITARY MANHOLE

MEDICAL GAS DESIGNATION

ABBR.	SYMBOL	DESCRIPTION
DA	DA	DENTAL AIR
DV	DV	DENTAL VACUUM
IA	IA	INSTRUMENT AIR
MA	MA	MEDICAL AIR
MV	MV	MEDICAL VACUUM
N	N	NITROGEN
NO	NO	NITRUS OXIDE
O	O	OXYGEN
WAGD	WAGD	WASTE ANESTHESIA GAS DISPOSAL

PROCESS GAS DESIGNATION

ABBR.	SYMBOL	DESCRIPTION
AC	AC	ACETYLENE
AR	AR	ARGON
CA	CA	COMPRESSED DRY AIR
CO2	CO2	CARBON DIOXIDE
H	H	HYDROGEN
HE	HE	HELIUM
LN	LN	LIQUID NITROGEN
LOX	LOX	LIQUID OXYGEN
O	O	OXYGEN

DEMOLITION GENERAL NOTES

A. CONTRACTOR SHALL VERIFY LOCATION OF ALL PIPING, EQUIPMENT, ETC. SERVED BY EXISTING EQUIPMENT TO BE REMOVED. CONTRACTOR SHALL REMOVE SUCH ITEMS ONLY IF THEY DO NOT SERVE FIXTURES TO REMAIN. ALL PIPING SHALL BE CAPPED IN A CONCEALED LOCATION.

B. CONTRACTOR SHALL BE RESPONSIBLE FOR REPAIRING AND FINISHING SURFACES (WALLS, FLOORS, CEILINGS) DAMAGED DURING REMOVAL OF EQUIPMENT AND PIPING UNLESS REMOVAL OR RENOVATION OF SURFACE IS COVERED UNDER ANOTHER SECTION OF THIS CONTRACT.

C. CONTRACTOR SHALL DISPOSE OF OR RETURN ALL PLUMBING FIXTURES, PIPING, ETC. TO OWNER IN ACCORDANCE WITH DIRECTION OF THE ARCHITECT.

D. REMOVE ANY COLD WATER, HOT WATER, GAS, WASTES OR VENT PIPING (NOT SHOWN) UNCOVERED IN EXISTING PARTITIONS TO BE REMOVED; REMOVE BACK TO ACTIVE LINE AND CAP.

E. PLUG OR SEAL ALL SOIL, WASTE AND VENT OPENINGS AS DIRECTED FOR A SMOOTH FINISH FLOOR.

F. PIPE ROUTING IS APPROXIMATE ONLY; EACH BIDDER SHALL SATISFY HIMSELF AS TO EXISTING BUILDING CONDITIONS BEFORE SUBMITTING HIS BID. NO ALLOWANCE SHALL BE MADE AFTER CONTRACT IS AWARDED TO ALLOW FOR LACK OF PRE-BID INSPECTION OF BUILDING BY SUCCESSFUL BIDDER.

G. COORDINATE WORK WITH OTHER TRADES TO MINIMIZE CONFLICTS AND "DOWN TIME".

Fire Protection Notes

A. THE CONTRACTOR SHALL REPLACE EXISTING AUTOMATIC, WET PIPE, FIRE PROTECTION SPRINKLER SYSTEM IN THE AREAS BEING RENOVATED ASSOCIATED WITH THIS PROJECT AND SHOWN ON FIRE PROTECTION DRAWING. IN AREAS WITH CEILINGS, ALL PIPING SHALL BE CONCEALED. IN AREAS WHERE PIPING IS EXPOSED, ALL PIPE, FITTINGS AND HANGERS SHALL BE PAINTED, COLOR AS DIRECTED BY ARCHITECT. ALL EXPOSED PIPING SHALL BE RUN AS HIGH AS POSSIBLE AND SHALL BE COORDINATED WITH STRUCTURE, DUCTWORK, ROOF OPENINGS AND LIGHTING TO BE AS INCONSPICUOUS AS POSSIBLE. LAYOUT SHALL BE **SUBMITTED FOR APPROVAL TO CITY OF SANTA FE FIRE DEPARTMENT, CITY OF SANTA FE & NMCID, BUILDING AND INSPECTION DEPARTMENT AND THE ARCHITECT**. ALL REQUIRED APPROVALS SHALL BE OBTAINED BEFORE ORDERING MATERIALS OR BEGINNING FABRICATION. ALL HEADS SHALL MATCH EXISTING (EITHER CHROME PLATED OR WHITE - CONTRACTOR TO COORDINATE WITH INDIVIDUAL EXISTING AREAS), TEMPERATURE RATED AT 165 DEGREES F., EXCEPT 212 DEGREES F IN AREAS AS OUTLINED IN NFPA 13.

B. THE NEW REPLACED SPRINKLER PIPING SHALL BE RECONNECTED TO THE EXISTING PIPING SERVING THE REMAINING FLOOR NOT PART OF THIS PROJECT.

C. DESIGN AND INSTALLATION SHALL CONFORM TO THE LATEST EDITIONS OF NFPA 13, 101, AND I.B.C. AND THE SPECIFICATIONS.

D. DUE TO LIMITED CEILING SPACE, COORDINATION WITH OTHER TRADES SHALL BE REQUIRED PRIOR TO ANY PIPING INSTALLATION. IF SPRINKLER CONTRACTOR FAILS TO PROPERLY COORDINATE HIS PIPING WITH OTHER TRADES, RELOCATION OF SPRINKLER PIPING, ETC., SHALL BE AT HIS OWN EXPENSE, AS DIRECTED BY THE ARCHITECT AND ENGINEER.

E. SPRINKLER SHOP DRAWINGS SHALL SHOW ALL DUCTWORK, DIFFUSER LOCATIONS, LIGHTS, BUS DUCTS AND OTHER PIPING MAINS, ETC., REQUIRING COORDINATION WITH SPRINKLER MAINS, SPRINKLER HEADS, ETC.

F. PROVIDE AND INSTALL "DRY-TYPE", PENDENT (FREEZE-PROOF) SPRINKLER HEADS AT ALL UNHEATED SPACES, DOCK OVERHANG AND AT ALL LOCATIONS SUBJECT TO FREEZING.

G. THE FIRE PROTECTION CONTRACTOR SHALL BE RESPONSIBLE FOR VERIFYING EXISTING SITE CONDITIONS, WATER PRESSURE AND FIRE FLOW, BEFORE SUBMITTING HIS BID. THIS CONTRACTOR SHALL EXTEND NEW FIRE PROTECTION SUPPLY PIPING FROM EXISTING FIRE PROTECTION RISER FLANGE IN FIRE PROTECTION RISER ROOM TO ENTIRE BUILDING.

H. CONTRACTOR SHALL PROVIDE COMPLETE HYDRAULIC CALCULATIONS WHERE REQUIRED BY NFPA 13.

PLUMBING GENERAL NOTES

A. ALL PIPING SHALL BE CONCEALED WHERE POSSIBLE. ALL EXPOSED PIPING, WHERE CONCEALMENT IS NOT POSSIBLE, SHALL BE INSTALLED AND PAINTED AS DIRECTED BY THE ARCHITECT.

B. ALL PIPING SHALL BE INSULATED, SEE SPECIFICATIONS.

C. ALL BRANCHES SHALL BE VALVED AND ALL VALVES SHALL HAVE UNIONS ADJACENT. ACCESS PANELS AND DOORS SHALL BE FURNISHED TO GENERAL CONTRACTOR FOR INSTALLATION AND ACCESS TO VALVES WHERE REQUIRED. LOCATE ADDITIONAL VALVES AS SHOWN ON DRAWINGS. SEE SPECIFICATIONS FOR ACCESS DOOR REQUIREMENTS.

D. ALL PIPING SHALL PITCH TO DRAIN, AND CONTRACTOR SHALL PROVIDE VALVING FOR SYSTEM DRAINAGE. CONTRACTOR SHALL DELIVER A MARKED-UP SET OF PLANS TO THE OWNER (PRIOR TO FINAL PAYMENT) SHOWING ALL BRANCH VALVES AND ALL DRAINAGE POINTS.

E. CARE SHALL BE TAKEN TO AVOID MECHANICAL DUCTWORK, ELECTRICAL EQUIPMENT AND AIR HANDLING EQUIPMENT ABOVE CEILING. THIS CONTRACTOR SHALL BE RESPONSIBLE FOR COORDINATING ROUTING OF PIPING WITH CEILING CONTRACTOR AND SHEET METAL CONTRACTOR. RELOCATION OF PIPING AS A RESULT OF POOR COORDINATION BY THIS CONTRACTOR SHALL BE AT HIS OWN EXPENSE.

F. NO WATER PIPING SHALL BE LOCATED IN OUTSIDE WALLS, UNLESS SHOWN TO BE AND THEN PIPING TO BE INSULATED AND LOCATED AS CLOSE AS POSSIBLE TO INSIDE OF WALL CAVITY WITH ADDITIONAL INSULATION BETWEEN PIPING AND EXTERIOR OF WALL.

G. WRITTEN PRIOR APPROVAL REQUIRED FOR ALL PROPOSED SUBSTITUTIONS OF EQUIPMENT AND MATERIALS, RECEIVED BY ENGINEER, 10 DAYS PRIOR TO BID DATE OF PROJECT TO ALLOW ADEQUATE TIME FOR REVIEW AND RESPONSE.

H. ALL TRENCHING AND BACKFILL FOR PIPING SHALL BE THE RESPONSIBILITY OF THIS CONTRACTOR.

I. ALL SEWER PIPING BELOW FLOOR SLAB (BELOW GRADE) SHALL BE STANDARD WEIGHT HUB AND SPIGOT CAST IRON.

J. ALL PIPE PENETRATIONS THRU FIRE-RATED ASSEMBLIES SHALL BE SLEEVED AND SEALED WITH CODE-APPROVED FIRE BARRIER MATERIALS.

K. SECURE ALL PIPING TO WALLS FOR A RIGID INSTALLATION WITH UNISTRUT BRACKETS AND GASKETED PIPE CLAMPS.

PLUMBING SHEET INDEX

P-001	PLUMBING LEGEND & GENERAL NOTES
PD101	PLUMBING DEMOLITION FLOOR PLAN
FP-101	FIRE PROTECTION PLAN
P-101	PLUMBING WASTE & VENT PLAN
P-102	DOMESTIC WATER FLOOR PLAN
P-601	PLUMBING SCHEDULES & DETAILS

STUDIO SW ARCHITECTS
2101 Mountain Road NW Suite B | Albuquerque NM 87104
505-843-9639 | www.studioswarch.com

© 2021 Studio Southwest Architects, Inc. Duplication or reproduction by any means without the express written consent of Studio Southwest Architects, Inc. is a violation of federal and international law. The information contained in this document is the intellectual property of Studio Southwest Architects, Inc. and all rights thereto are reserved.

CONSULTANTS

TESTUDO ENGINEERING
7007 Wyoming Blvd NE Suite E-1
Albuquerque, NM 87109
WWW.TESTUDOENG.COM PH:505-554-1282

Architect Engineer

STATE OF NEW MEXICO 23914 REGISTERED PROFESSIONAL ENGINEER WAYNE A. YEVOLI 08/14/2025

SFC HONDO FIRE STATION

645 OLD LAS VEGAS HIGHWAY
SANTA FE, NM 87505

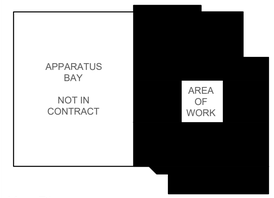

Key Plan NTS

No	Date	Description
Revision Schedule		

ISSUE:	100% CONSTRUCTION DOCUMENTS
PROJECT NUMBER:	2502
FILE:	25006_P-001.dwg
DRAWN BY:	NS
CHECKED BY:	DCG
DATE:	AUGUST 14, 2025

SHEET TITLE

PLUMBING LEGEND & GENERAL NOTES

P-001

8/14/2025 12:08:53 PM

Z:\Projects 2025\25006 Hondo-SF Fire Station Remodel\Cad\Drawings\25006_PD101.dwg

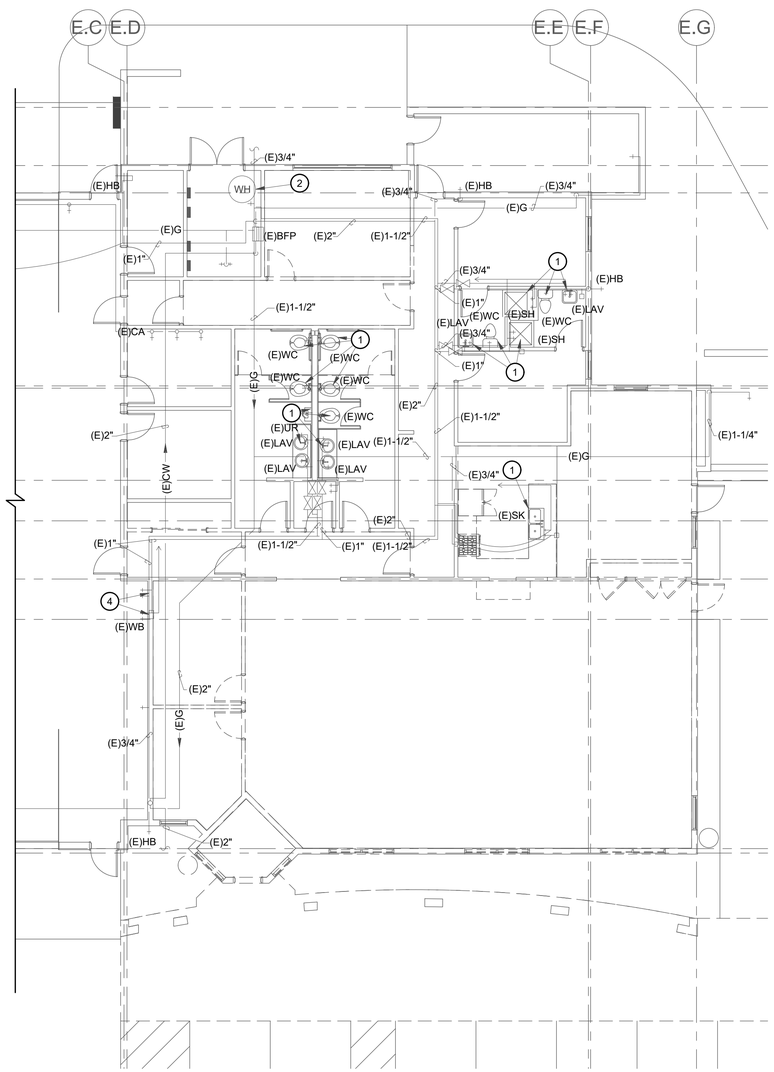

PLUMBING WATER & GAS DEMOLITION PLAN

SCALE: 1/8" = 1'-0"

N

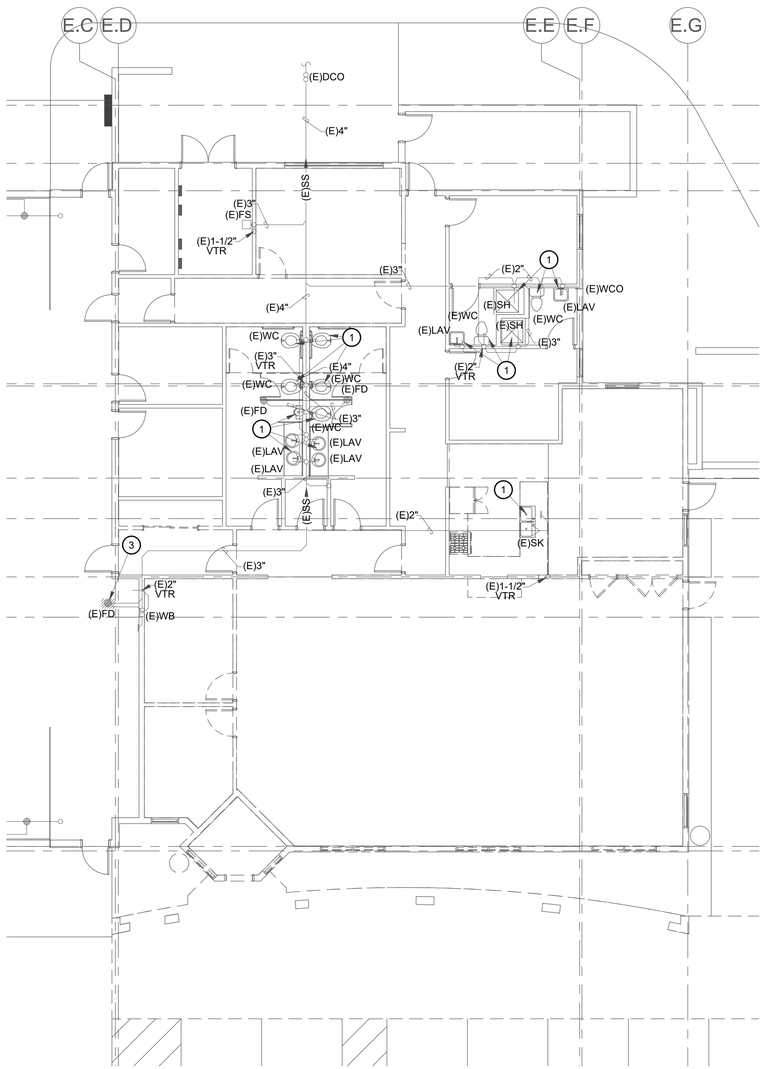

PLUMBING WATER & GAS DEMOLITION PLAN

SCALE: 1/8" = 1'-0"

N

GENERAL NOTES

A. REFER TO SHEET P-501 FOR DETAILS.

B. REFER TO SHEET P-001 FOR GENERAL NOTES, LEGEND & SCHEDULES.

C. DUE TO A LACK OF EXISTING DRAWINGS OF THE SPACE, THE LOCATIONS SHOWN FOR EXISTING PLUMBING LINES ARE LARGELY SHOWN AS ESTIMATES. IT IS THE CONTRACTOR'S RESPONSIBILITY TO FIELD VERIFY EXISTING CONDITIONS, INCLUDING LOCATION AND SIZE OF EACH PLUMBING LINE. ANY EXISTING LINE THAT IS NOT AT LEAST AS LARGE AS THE SIZE INDICATED ON THIS PLAN SHALL BE REMOVED AND REPLACED WITH THE PROPER SIZE. IF THE EXISTING PLUMBING LINES ARE ROUTED DIFFERENTLY FROM WHAT IS SHOWN, IT IS THE CONTRACTOR'S RESPONSIBILITY TO CONFIRM WITH THE ENGINEER THE CORRECT SIZING FOR THE ACTUAL ROUTING OF PIPING. FIELD VERIFY THAT NO OTHER PLUMBING FIXTURES ARE SERVED BY THIS PIPING. IF THERE IS, SIMILARLY CONSULT ENGINEER FOR CORRECT SIZING WITH ALL OTHER FIXTURES ACCOUNTED FOR.

KEYED NOTES

1. EXISTING PLUMBING FIXTURE TO REMAIN AND BE REUSED IN NEW WORK.
2. EXISTING WATER HEATER TO REMAIN AND BE REUSED.
3. EXISTING FLOOR DRAIN BE REMOVED AND REPLACED WITH NEW FLOOR SINK IN NEW WORK. EXISTING EXTRACTOR TO BE REMOVED AND DISCONNECTED FROM EXISTING FLOOR DRAIN.
4. EXISTING WASHING MACHINE BOX TO REMAIN AND BE REUSED. EXISTING EXTRACTOR WATER SUPPLY TO BE DISCONNECTED FROM WATER SOURCE AND RECONNECT IN NEW WORK.

STUDIO SW ARCHITECTS
2101 Mountain Road NW Suite B | Albuquerque NM 87104
505-843-9639 | www.studioswarch.com

© 2021 Studio Southwest Architects, Inc. Duplication or reproduction by any means without the express written consent of Studio Southwest Architects, Inc. is a violation of federal and international law. The information contained in this document is the intellectual property of Studio Southwest Architects, Inc. and all rights thereto are reserved.

CONSULTANTS

TESTUDO ENGINEERING
7007 Wyoming Blvd NE Suite E-1
Albuquerque, NM 87109
WWW.TESTUDOENG.COM PH:505-554-1282

Architect Engineer

WAYNE A. YEVOLI
STATE OF NEW MEXICO
23914
REGISTERED PROFESSIONAL ENGINEER
08/14/2025

SFC HONDO FIRE STATION

645 OLD LAS VEGAS HIGHWAY
SANTA FE, NM 87505

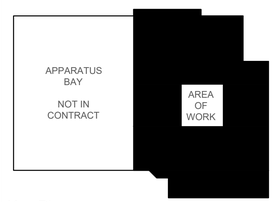

Key Plan NTS

No	Date	Description
Revision Schedule		

ISSUE:	100% CONSTRUCTION DOCUMENTS
PROJECT NUMBER:	2502
FILE:	25006_PD101.dwg
DRAWN BY:	NS
CHECKED BY:	DCG
DATE:	AUGUST 14, 2025

SHEET TITLE

PLUMBING DEMOLITION PLAN

PD101

8/14/2025 12:08:57 PM

Z:\Projects 2025\25006 Hondo-SF Fire Station Remodel\Cadd\Drawings\25006_P-101.dwg

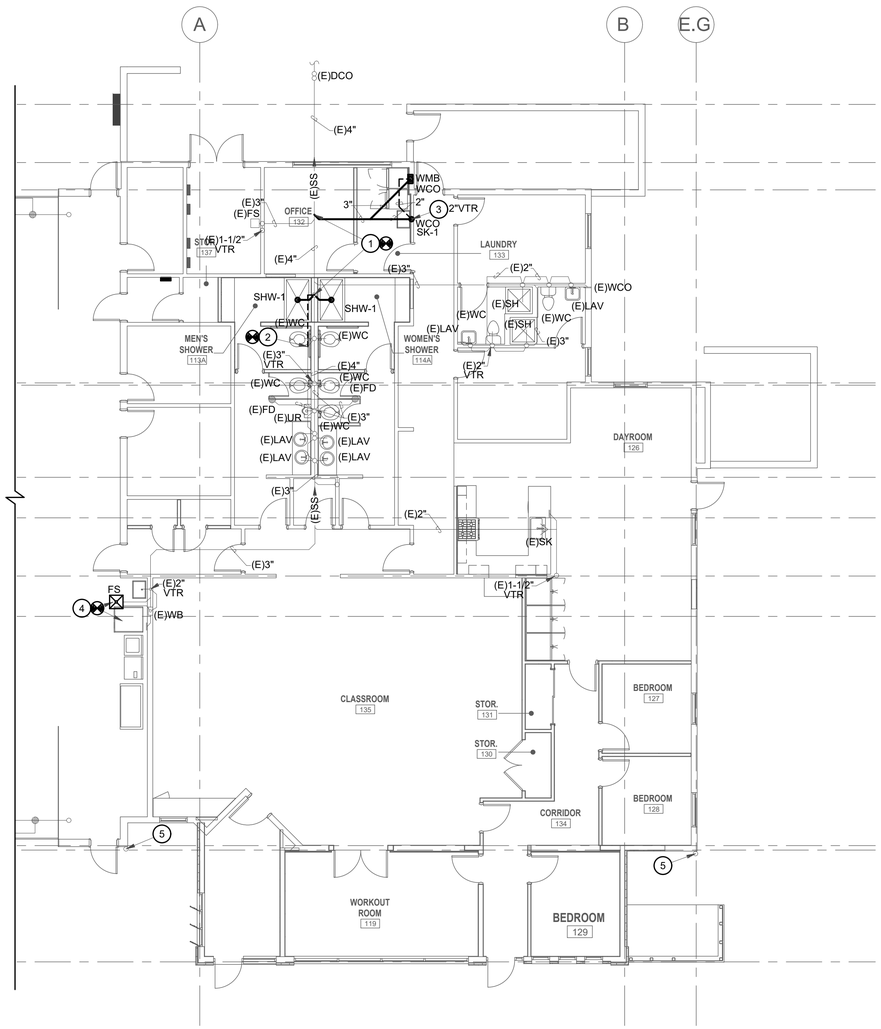

WASTE & VENT PLAN

SCALE: 1/8" = 1'-0"

N

GENERAL NOTES

A. REFER TO SHEET P-501 FOR DETAILS.

B. REFER TO SHEET P-001 FOR GENERAL NOTES, LEGEND & SCHEDULES.

KEYED NOTES

1. EXTEND NEW 3" WASTE LINE AND CONNECT TO EXISTING 4" WASTE LINE AT THIS LOCATION. CONTRACTOR TO FIELD VERIFY EXISTING CONDITIONS AND EXACT LOCATION. COORDINATED WITH STRUCTURAL FOR ALL CORE DRILLING/TRENCHING REQUIRED TO MAKE CONNECTION.
2. EXTEND 2" VENT LINE AND CONNECT TO EXISTING SAME SIZE OR LARGER CORRESPONDING LINE.
3. EXTEND 2" VENT THRU ROOF, CONTRACTOR TO FIELD VERIFY NO FRESH AIR INTAKE IS WITHIN 10'-0" OF VENT.
4. CONTRACTOR TO INSTALL NEW EXTRACTOR IN THIS LOCATION AND EXTEND WASTE LINE AND CONNECT/DRAIN TO NEW FLOOR SINK PER ALL MANUFACTURES CLEARANCES AND REQUIREMENTS. CONTRACTOR TO FIELD VERIFY EXACT LOCATION IN FIELD PER MANUFACTURES DRAIN REQUIREMENTS.
5. DOWN SPOUT LOCATION FROM ARCHITECTURAL SCUPPERS, COORDINATE EXACT LOCATION WITH ARCHITECTURAL PLANS.

STUDIO SW ARCHITECTS
2101 Mountain Road NW Suite B | Albuquerque NM 87104
505-843-9639 | www.studioswarch.com

© 2021 Studio Southwest Architects, Inc. Duplication or reproduction by any means without the express written consent of Studio Southwest Architects, Inc. is a violation of federal and international law. The information contained in this document is the intellectual property of Studio Southwest Architects, Inc. and all rights thereto are reserved.

CONSULTANTS

TESTUDO ENGINEERING
7007 Wyoming Blvd NE Suite E-1
Albuquerque, NM 87109
WWW.TESTUDOENG.COM PH:505-554-1282

Architect Engineer

WAYNE A. YEVOLI
STATE OF NEW MEXICO
23914
REGISTERED PROFESSIONAL ENGINEER
08/14/2025

SFC HONDO FIRE STATION

645 OLD LAS VEGAS HIGHWAY
SANTA FE, NM 87505

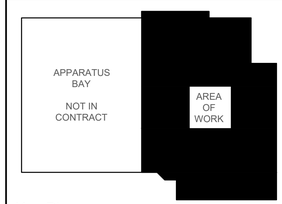

Key Plan NTS

No	Date	Description
Revision Schedule		

ISSUE:	100% CONSTRUCTION DOCUMENTS
PROJECT NUMBER:	2502
FILE:	25006_P-101.dwg
DRAWN BY:	NS
CHECKED BY:	DCG
DATE:	AUGUST 14, 2025

SHEET TITLE

WASTE & VENT PLAN

P-101

8/14/2025 12:09:00 PM

Z:\Projects 2025\25006 Hondo-SF Fire Station Remodel\Cad\Drawings\25006_P-102.dwg

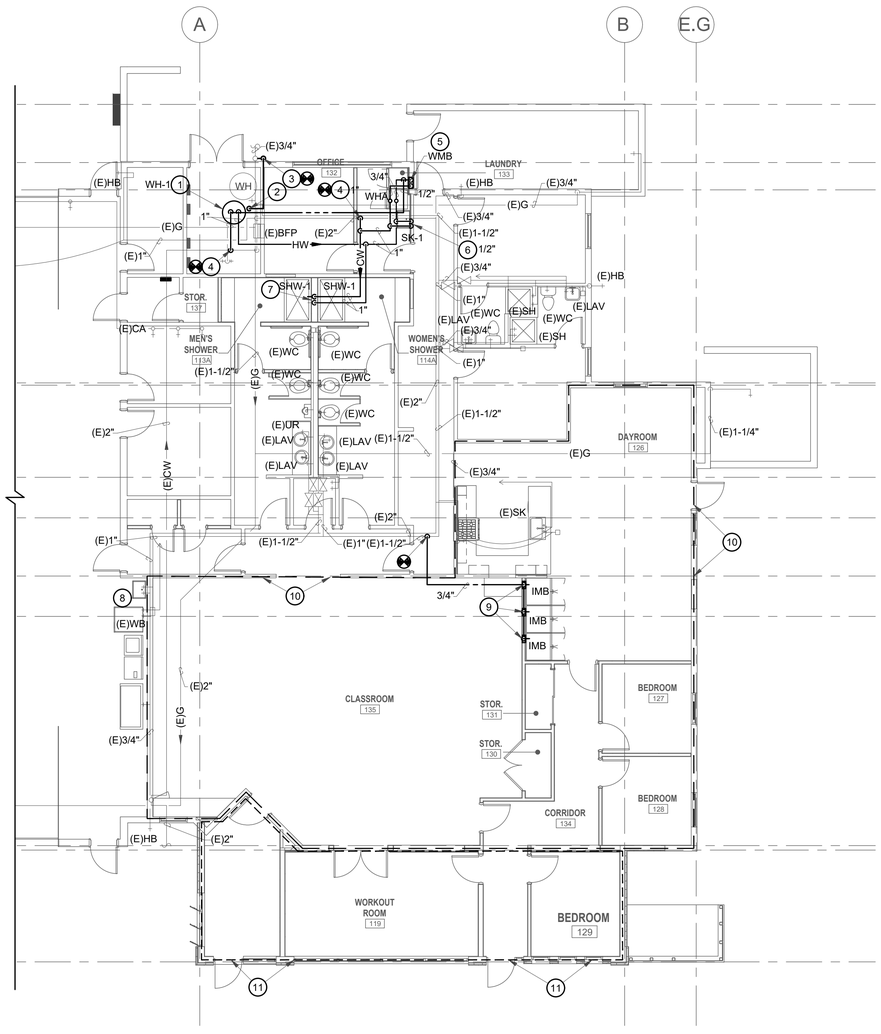

DOMESTIC WATER PLAN

SCALE: 1/8" = 1'-0"

N

GENERAL NOTES

A. REFER TO SHEET P-501 FOR DETAILS.

B. REFER TO SHEET P-001 FOR GENERAL NOTES, LEGEND & SCHEDULES.

KEYED NOTES

1. INSTALL NEW WATER HEATER IN LOCATION SHOWN PER ALL MANUFACTURES CLEARANCES AND REQUIREMENTS. CONTRACTOR TO FIELD VERIFY EXISTING CONDITIONS AND EXACT LOCATION PRIOR TO START OF WORK.
2. EXTEND 3/4" GAS AND CONNECT TO NEW WATER HEATER PER ALL MANUFACTURES CLEARANCES AND REQUIREMENTS.
3. EXTEND 3/4" GAS LINE AND CONNECT TO REGULATOR LINE AT THIS LOCATION AND PROVIDE WITH VENTED PRESSURE REDUCING VALVE (AS NEEDED). THEN ROUTE LOW PRESSURE GAS LINE INTO MECHANICAL ROOM WITH ISOLATION VALVE. CONTRACTOR TO FIELD VERIFY EXISTING CONDITIONS AND EXACT LOCATION. CONTRACTOR TO SET EXISTING REGULATOR FOR ADDITIONAL LOAD OF 100 MBH.
4. EXTEND NEW 1" CW LINE AND CONNECT TO EXISTING 2" CW LINE. CONTRACTOR TO FIELD VERIFY EXISTING CONDITIONS AND EXACT LOCATION.
5. EXTEND 3/4" HW/CW DOWN IN WALL TO WASHING MACHINE BOX.
6. EXTEND 1/2" HW/CW DOWN IN WALL TO WASHING MACHINE BOX.
7. EXTEND 1" HW/CW DOWN IN WALL AND EXTEND 3/4" CW/HW TO EACH SHOWER.
8. CONTRACTOR TO INSTALL NEW EXTRACTOR IN THIS LOCATION AND EXTEND/CONNECT 3/4" CW/HW LINES TO EXISTING WATER CONNECTIONS PER ALL MANUFACTURES CLEARANCES AND REQUIREMENTS.
9. EXTEND 3/4" CW DOWN IN WALL AND EXTEND 1/2" CW TO EACH ICE MAKER BOX.
10. CONTRACTOR TO MODIFY THE EXISTING FIRE SPRINKLER SYSTEM TO MEET NFPA 13 AND CURRENT FIRE CODE.
11. CONTRACTOR TO EXTEND NEW FIRE PROTECTION SYSTEM FROM NEW AREA NEW FIRE SPRINKLER SYSTEM TO MEET NFPA 13 AND CURRENT FIRE CODE. CONTRACTOR SHALL PROVIDE AND PLAN IDENTIFYING ALL POINTS OF CONNECTION BETWEEN THE NEW SPRINKLER SYSTEM AND THE OLD REMAINING SYSTEM. THIS PLAN SHALL BE SUBMITTED WITH FIRE SPRINKLER SYSTEM SUBMITTAL FOR OWNER AND ENGINEER REVIEW.

STUDIO SW ARCHITECTS
2101 Mountain Road NW Suite B | Albuquerque NM 87104
505-843-9639 | www.studioswarch.com

© 2021 Studio Southwest Architects, Inc. Duplication or reproduction by any means without the express written consent of Studio Southwest Architects, Inc. is a violation of federal and international law. The information contained in this document is the intellectual property of Studio Southwest Architects, Inc. and all rights thereto are reserved.

CONSULTANTS

TESTUDO ENGINEERING
7007 Wyoming Blvd NE Suite E-1
Albuquerque, NM 87109
WWW.TESTUDOENG.COM PH:505-554-1282

Architect Engineer

WAYNE A. YEVOLI STATE OF NEW MEXICO 23914 REGISTERED PROFESSIONAL ENGINEER 08/14/2025

SFC HONDO FIRE STATION

645 OLD LAS VEGAS HIGHWAY
SANTA FE, NM 87505

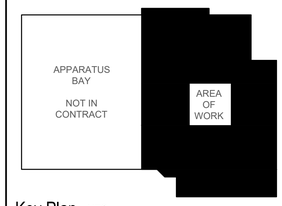

Key Plan NTS

No	Date	Description
Revision Schedule		

ISSUE:	100% CONSTRUCTION DOCUMENTS
PROJECT NUMBER:	2502
FILE:	25006_P-102.dwg
DRAWN BY:	NS
CHECKED BY:	DCG
DATE:	AUGUST 14, 2025

SHEET TITLE

DOMESTIC WATER PLAN

P-102

8/14/2025 12:09:03 PM

Z:\Projects 2025\25006 Hondo-SF Fire Station Remodel\Cadd\Drawings\25006_P-601.dwg

PLUMBING FIXTURE / EQUIPMENT SCHEDULE

SYMBOL	DESCRIPTION
WMB	WASHER BOX: OATEY 38970, 1/4 TURN 1/2" HW AND 1/2" CW MIPxSWEAT VALVES WITH MOUNTED WATER HAMMER ARRESTORS, AND WASHER BOX FABRICATED OF MOLDED PLASTIC
SHW	SHOWER: LEONARD VALVE MODEL 4501. PRESSURE BALANCING SHOWER VALVE, CHORME LEVER HANDLE, SCREWDRIVER CHECK-STOPS, H-05 SHOWER HEAD WITH 2.5 GPM FLOW CONTROL, ARM AND FLANGE, COMPLETE WITH J.R. SMITH 2005-U SERIES CAST IRON BODY FLOOR DRAIN WITH NICKEL BRASS STRAINER, CLAMPING COLLAR AND VANDAL-PROOF SCREWS. INSTALL WITH BARRIER-FREE ANSI-COMPLIANT SHOWER INSERT WITH SEAT. SHOWER IS TO BE CUSTOM BUILT 60" BY 36" COORDINATE ARCHITECTURAL ON SPECIFICATIONS. TRAP: 3" VENT: 2" CW: 1/2" HW: 1/2"
FCO	FLOOR CLEANOUT: J.R. SMITH 4023, CAST IRON C.O., WITH ROUND SCORIATED TOP.
WCO	WALL CLEANOUT: J.R. SMITH 4530-Y CAST IRON C.O. TEE WITH BRASS PLUG AND ROUND STAINLESS STEEL ACCESS COVER WITH VANDAL PROOF SCREW.
WHA	WATER HAMMER ARRESTOR: J.R. SMITH 5000 STAINLESS STEEL, SEALED AIR CHARGE, 1" IPS, PROPERLY SIZED FOR FIXTURE LOAD AT POINT OF INSTALLATION.
WH-1	WATER HEATER AO SMITH CYCLONE MXI CONDENSING WATER HEATER MODEL BTX-100, GLASS LINED TANK, 98% THERMAL EFFICIENCY, 100,000 BTU/HR, DIRECT VENT INTAKE AND EXHAUST (PROVIDE WITH CONCENTRIC VENT ASSEMBLY), ENHANCED-FLOW BRASS DRAIN VALVE, COREGARD ANODE ROD, HANDHOLE CLEANOUT, ASME TANK, UNIT SHALL BE 50 GALLON STORAGE, WITH 129 GPH RECOVERY AT 90 DEGREE RISE, 1" WATER INLET AND OUTLET, 120 V - 60 HZ 5.0 AMPS, WORKING PRESSURE OF 150 PSI, COMPLETE WITH ASME TEMPERATURE AND PRESSURE RELIEF VALVE RATED AT 150 PSI. WATER HEATER SHALL COME COMPLETE WITH A MODEL ST-5 PRESSURIZED DIAPHRAM-TYPE EXPANSION TANK. UNIT SHALL BE DESIGNED FOR USE WITH DOMESTIC HOT WATER, STAINLESS STEEL FITTINGS, INSTALLATION AS SHOWN ON THE DRAWINGS AND SHALL BE DESIGNED FOR MAX WORKING PRESSURE OF 150 PSI AT 200 F, INITIAL CHARGE PRESSURE SHALL BE 40 PSI. UNIT SHALL HAVE A TANK CAPACITY OF 2 GALLONS. TANK SHALL BE MANUFACTURED BY AMTROL OR APPROVED EQUAL. WATER HEATER SHALL MEET FEDERAL THERMAL EFFICIENCY STANDARDS.
SK-1	LAUNDRY SINK: FIAT MODEL FL-1 FLOOR MOUNTED LAUNDRY TUB, WITH WHITE BAKED ENAMEL LEGS WITH LEVELING FEET, 4" LEDGE, T&S BRASS MODEL B-0892 DECK MOUNTED FAUCET WITH INDEXED LEVER HANDLES, 133X GOOSENECK WITH SWIVEL ADAPTER AND B-0199-06F, 1.5 GPM FLOW RESTRICTOR, CHROME PLATED CAST BRASS ANGLE SUPPLIES WITH LOOSE KEY STOPS, PROVIDE WITH MOP RACK ,STOPPER DRAIN WITH 1-1/2" TAILPIECE AND CODE APPROVED ADJUSTABLE "P" TRAP WITH WASTE TO WALL. TRAP 1-1/2" VENT 1-1/2" CW 1/2" HW 1/2"
FS	FLOOR SINK: JR SMITH 3450-3451, 16 X 16 X 12, CAST IRON, ACID RESISTING ENAMEL INTERIOR AND TOP, SEDIMENT BUCKET, STRAINER AND NICKEL BRONZE TOP, 1/2 GRATE, COMPLETE WITH TRAP GUARD (TG), SIZE TO MATCH FLOOR SINK. TRAP 3" VENT 2" CW - HW -

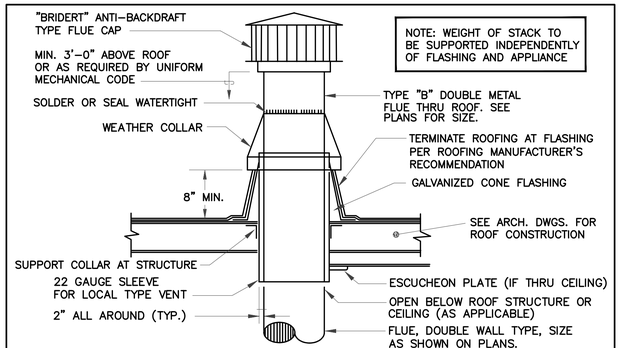

FLUE THRU ROOF DETAIL

SCALE: NONE

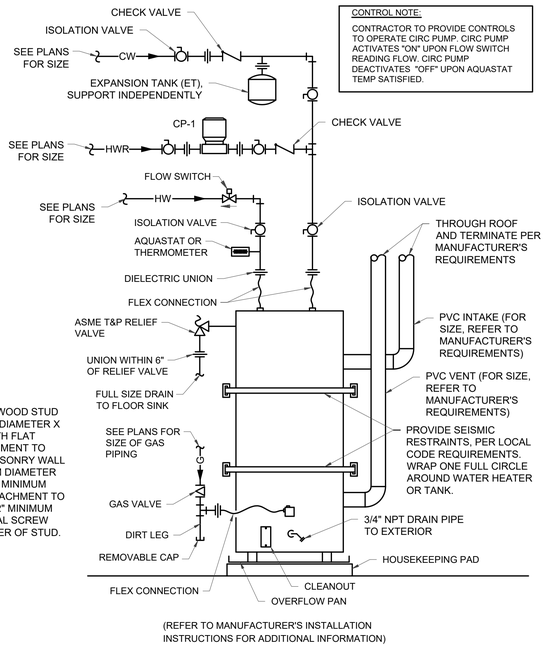

CONTROL NOTE:

CONTRACTOR TO PROVIDE CONTROLS TO OPERATE CIRC PUMP. CIRC PUMP ACTIVATES "ON" UPON FLOW SWITCH READING FLOW. CIRC PUMP DEACTIVATES "OFF" UPON AQUASTAT TEMP SATISFIED.

NOTE:
ATTACHMENT TO WOOD STUD USE 1/4" MINIMUM DIAMETER X 3" LAG SCREW WITH FLAT WASHER. ATTACHMENT TO CONCRETE OR MASONRY WALL WITH 1/4" MINIMUM DIAMETER ANCHORS WITH 2" MINIMUM EMBEDMENT. ATTACHMENT TO STEEL STUD USE 2" MINIMUM LONG SHEET METAL SCREW LOCATED IN CENTER OF STUD.

(REFER TO MANUFACTURER'S INSTALLATION INSTRUCTIONS FOR ADDITIONAL INFORMATION)

WATER HEATER PIPING SCHEMATIC

SCALE: NONE

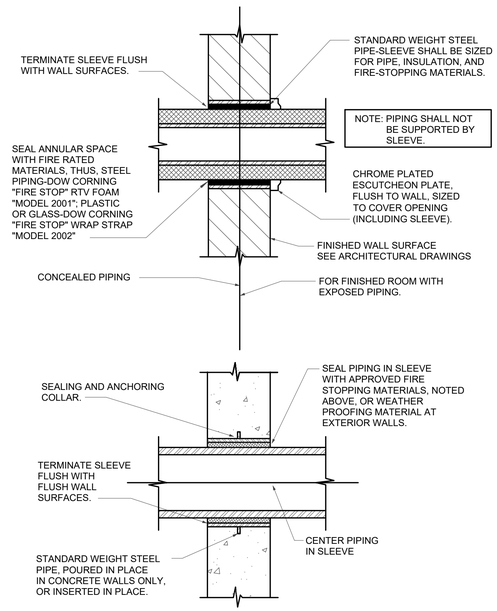

PIPE SLEEVE THRU WALL DETAIL

SCALE: NONE

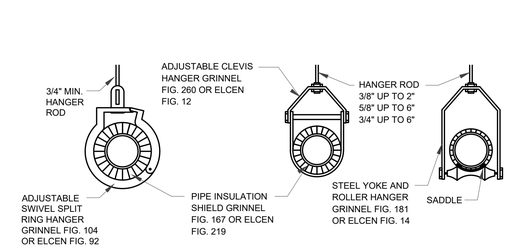

GROUP SUPPORT

PIPE SUPPORTS DETAIL

SCALE: NONE

STUDIO SW ARCHITECTS
2101 Mountain Road NW Suite B | Albuquerque NM 87104
505-843-9639 | www.studioswarch.com

© 2021 Studio Southwest Architects, Inc. Duplication or reproduction by any means without the express written consent of Studio Southwest Architects, Inc. is a violation of federal and international law. The information contained in this document is the intellectual property of Studio Southwest Architects, Inc. and all rights thereto are reserved.

CONSULTANTS

TESTUDO ENGINEERING
7007 Wyoming Blvd NE Suite E-1
Albuquerque, NM 87109
WWW.TESTUDOENG.COM PH:505-554-1282

Architect Engineer

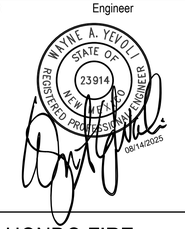

SFC HONDO FIRE STATION

645 OLD LAS VEGAS HIGHWAY
SANTA FE, NM 87505

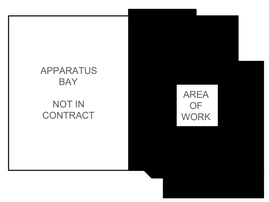

Key Plan NTS

No	Date	Description
Revision Schedule		

ISSUE:	100% CONSTRUCTION DOCUMENTS
PROJECT NUMBER:	2502
FILE:	25006_P-601.dwg
DRAWN BY:	NS
CHECKED BY:	DCG
DATE:	AUGUST 14, 2025

SHEET TITLE

PLUMBING SCHEDULES

P-601

8/14/2025 12:09:06 PM

Z:\Projects 2025\25006 Hondo-SF Fire Station Remodel\Cad\Drawings\25006_M-001.dwg

MECHANICAL SYMBOL LEGEND

(ALL SYMBOLS SHOWN ARE NOT NECESSARILY USED ON THE DRAWINGS)

ABBR.	SYMBOL	DESCRIPTION	ABBR.	SYMBOL	DESCRIPTION
		KEYED NOTES	RAD		RETURN AIR DAMPER
		EQUIPMENT DESIGNATION	SP		STATIC PRESSURE
		DEMOLISHED ITEM	SW		SIDEWALL
(E)		EXISTING	TG		TRANSFER GRILLE
(TYP)		TYPICAL		T	THERMOSTAT
AF		AIR FILTER			POINT OF CONNECTION
BDD		BACKDRAFT DAMPER			BUTTERFLY VALVE
BTU		BRITISH THERMAL UNITS			BALL VALVE
CD		CEILING DIFFUSER			RISER DOWN
CFH		CUBIC FEET PER HOUR			RISER UP
CFM		CUBIC FEET PER MINUTE			VALVE IN RISER
DIA	Ø	DIAMETER			DROP
DG		DOOR GRILLE			RISER UP
EAD		EXHAUST AIR DAMPER (OPPOSED BLADE)			PIPE GUIDE
ELV		ELEVATION			DIRECTION OF FLOW
ESP		EXTERNAL STATIC PRESSURE			GLOBE VALVE
EWT		ENTERING WATER TEMPERATURE			CHECK VALVE
°F		DEGREES FAHRENHEIT			PLUG VALVE
FFE		FINISH FLOOR ELEVATION			BALANCING VALVE
G		GRILLE			TEMPERATURE CONTROL VALVE (2-WAY)
GPH		GALLONS PER HOUR			TEMPERATURE CONTROL VALVE (3-WAY)
HP		HORSE POWER			SOLENOID VALVE
INV		INVERT ELEVATION			UNION
LD		LINEAR DIFFUSER			FLANGED CONNECTION
LWT		LEAVING WATER TEMPERATURE			PIPE ANCHOR
NA		NOT APPLICABLE			SAFETY RELIEF VALVE
NC		NORMALLY CLOSED			PRESSURE GAUGE WITH PIG TAIL AND COCK
NO		NORMALLY OPEN			THERMOMETER
OAD		OUTSIDE AIR DAMPER (OPPOSED BLADE)			STRAINER WITH BLOW-OFF VALVE
PH		PHASE			FLOW SWITCH
PSIG		POUNDS PER SQUARE INCH			
R		REGISTER WITH OBD			

MECHANICAL DUCTWORK DESIGNATION

ABBR.	SYMBOL	DESCRIPTION	ABBR.	SYMBOL	DESCRIPTION
	20/12	RIGID DUCTWORK - FIRST FIGURE IS SIDE SHOWN	RA		SIDEWALL RETURN OR EXHAUST AIR INLET
	20/12	RIGID DUCTWORK	RR/EG		SIDEWALL RETURN OR EXHAUST AIR INLET
		FLEXIBLE DUCTWORK	FC		FLEXIBLE CONNECTION
		FLEXIBLE DUCTWORK	FD		FIRE DAMPER
		DUCT TRANSITION	S/FD		SMOKE/FIRE DAMPER
		DUCT TRANSITION	MVD		MANUAL VOLUME DAMPER
CD		CEILING SUPPLY AIR OUTLET	UH		UNIT HEATER
CD		CEILING SUPPLY AIR OUTLET	OBD		OPPOSED BLADE DAMPER
CD		CEILING SUPPLY AIR OUTLET	PBD		PARALLEL BLADE DAMPER
RG/EG		CEILING RETURN OR EXHAUST AIR INLET			RETURN OR EXHAUST DUCT DOWN
RG/EG		CEILING RETURN OR EXHAUST AIR INLET			SUPPLY DUCT DOWN
SA		SIDEWALL SUPPLY AIR OUTLET			RETURN OR EXHAUST DUCT UP
SA		SIDEWALL SUPPLY AIR OUTLET			SUPPLY AIR DUCT UP

MECHANICAL PIPING DESIGNATION

ABBR.	SYMBOL	DESCRIPTION	ABBR.	SYMBOL	DESCRIPTION
CHWR	—CHWR—	CHILLED WATER RETURN PIPING - COPPER TYPE "L"	LPS	— LPS —	LOW PRESSURE STEAM
CHWS	—CHWS—	CHILLED WATER SUPPLY PIPING - COPPER TYPE "L"	MPS	—MPS—	MEDIUM PRESSURE STEAM
D	— D —	CONDENSATE DRAIN LINE	RD	—RD—	ROOF DRAIN LEADER
GLR	—GLR—	GEOTHERMAL (CR GROUND) LOOP RETURN	RL	— RL —	REFRIGERANT LIQUID
GLS	—GLS—	GEOTHERMAL (CR GROUND) LOOP SUPPLY	RS	— RS —	REFRIGERANT SUCTION
HPR	—HPR—	HIGH PRESSURE CONDENSATE RETURN	TWR	—TWR—	TOWER WATER RETURN PIPING
HPS	—HPS—	HIGH PRESSURE STEAM	TWS	—TWS—	TOWER WATER SUPPLY PIPING
LPR	—LPR—	LOW PRESSURE CONDENSATE RETURN			

DEMOLITION GENERAL NOTES

A. CONTRACTOR SHALL VERIFY LOCATION OF ALL PIPING, EQUIPMENT, ETC. SERVED BY EXISTING EQUIPMENT TO BE REMOVED. CONTRACTOR SHALL REMOVE SUCH ITEMS ONLY IF THEY DO NOT SERVE FIXTURES TO REMAIN. ALL PIPING SHALL BE CAPPED IN A CONCEALED LOCATION.

B. CONTRACTOR SHALL BE RESPONSIBLE FOR REPAIRING AND FINISHING SURFACES (WALLS, FLOORS, CEILINGS) DAMAGED DURING REMOVAL OF EQUIPMENT AND PIPING UNLESS REMOVAL OR RENOVATION OF SURFACE IS COVERED UNDER ANOTHER SECTION OF THIS CONTRACT.

C. CONTRACTOR SHALL DISPOSE OF OR RETURN ALL PLUMBING FIXTURES, PIPING, ETC. TO OWNER IN ACCORDANCE WITH DIRECTION OF THE ARCHITECT.

D. REMOVE ANY COLD WATER, HOT WATER, GAS, WASTES OR VENT PIPING (NOT SHOWN) UNCOVERED IN EXISTING PARTITIONS TO BE REMOVED; REMOVE BACK TO ACTIVE LINE AND CAP.

E. PLUG OR SEAL ALL SOIL, WASTE AND VENT OPENINGS AS DIRECTED FOR A SMOOTH FINISH FLOOR.

F. PIPE ROUTING IS APPROXIMATE ONLY; EACH BIDDER SHALL SATISFY HIMSELF AS TO EXISTING BUILDING CONDITIONS BEFORE SUBMITTING HIS BID. NO ALLOWANCE SHALL BE MADE AFTER CONTRACT IS AWARDED TO ALLOW FOR LACK OF PRE-BID INSPECTION OF BUILDING BY SUCCESSFUL BIDDER.

G. COORDINATE WORK WITH OTHER TRADES TO MINIMIZE CONFLICTS AND "DOWN TIME".

HVAC GENERAL NOTES

A. ALL DUCTS SHALL BE EXTERNALLY INSULATED, UNLESS OTHERWISE NOTED.

B. ALL DUCT SEAMS SHALL BE SEALED AIRTIGHT WITH HIGH PRESSURE DUCT SEALER.

C. PROVIDE ALL NECESSARY FITTINGS FOR RISES AND OFFSETS IN DUCTWORK AND PIPING REQUIRED FOR PROPER INSTALLATION WHETHER OR NOT SHOWN ON DRAWINGS.

D. ALL DUCTWORK INSTALLED IN AREAS WITH CEILING TO BE ROUTED BETWEEN LIGHTS AS MUCH AS POSSIBLE AND INSTALLED AS HIGH AS POSSIBLE.

E. ALL DUCT PENETRATIONS THROUGH THE ROOF SHALL BE CURBED, FLASHED AND COUNTER-FLASHED TO ACHIEVE A WATERTIGHT CONSTRUCTION.

F. COORDINATE ROOF PENETRATIONS TO AND FROM EQUIPMENT WITH STRUCTURAL DRAWINGS. ROOF OPENINGS SHALL BE LOCATED BETWEEN JOISTS.

G. INSTALL "SPIN-IN" TYPE FITTINGS WITH BALANCING DAMPERS FOR ROUND BRANCH RUN-OUTS TO DIFFUSER. BRANCH DUCTS TO DIFFUSERS SHALL BE OF EQUAL SIZE TO NECK DIAMETER. ALL BRANCH DUCTS SHALL HAVE BALANCING DAMPERS.

H. FLEXIBLE ROUND DUCT BRANCHES TO DIFFUSERS SHALL BE PRE-INSULATED AND SHALL NOT EXCEED 5 FT. IN TOTAL LENGTH.

I. THE SPACE ABOVE THE CEILING IS SERVING AS A RETURN AIR PLENUM. ALL AIR BEING SUPPLIED SHALL BE PROVIDED WITH RETURN AIR PATH BACK TO ITS ORIGIN. PROVIDE IN WALLS EXTENDING THROUGH CEILING AND UP TO STRUCTURE A RETURN AIR OPENINGS EQUAL TO 1 FT^2 PER 500 CFM OF AIR BEING RETURNED, UNLESS OTHERWISE NOTED. PROVIDE WITH FIRE DAMPER IN FIRE RATED WALL.

J. COORDINATE THE LOCATIONS OF ALL DUCTWORK WITH ANY PLUMBING LINES AND ELECTRICAL CONDUIT. THE SPACE ABOVE THE CEILING IS LIMITED. IN THE EVENT THAT ANY DUCT CANNOT BE ROUTED AS SHOWN ON THE CONTRACT DRAWINGS, THE CONTRACTOR SHALL MODIFY THE DUCT AS REQUIRED, MAINTAINING THE SAME NET FREE AREA AS THE DESIGNED DUCT. CONTRACTOR SHALL SUBMIT SHOP DRAWINGS TO THE ARCHITECT, SHOWING THE PROPOSED CHANGES FOR APPROVAL. THIS SHALL BE DONE AT NO COST TO THE OWNER.

K. COORDINATE LOCATION OF ALL DIFFUSERS, GRILLES, AND REGISTERS TO BE SYMMETRICAL WITH RESPECT TO LIGHTS AND CEILING GRIDS. SEE REFLECTED CEILING PLAN AND LIGHTING PLAN.

L. ALL 90° SQUARE ELBOWS SHALL BE PROVIDED WITH DOUBLE THICK TURNING VANES.

M. ALL THERMOSTATS SHALL BE MOUNTED UP 48" ABOVE FINISHED FLOOR, UNLESS OTHERWISE NOTED.

N. ALL FIRE AND/OR SMOKE DAMPERS SHALL BE INSTALLED IN A U.L. APPROVED MANNER AND SHALL BE U.L. LISTED

O. PROVIDE ACCESS DOORS IN FIXED CEILINGS, CHASES, AND DUCTWORK TO ALL FIRE DAMPERS, BALANCING DAMPERS, OR OTHER MECHANICAL DEVICES REQUIRING SERVICE ACCESS.

P. BEFORE CONTRACTOR ORDERS ANY GRILLES, REGISTERS, OR DIFFUSERS, HE SHALL VERIFY THE CEILING CONSTRUCTION IN ALL AREAS OF THE PROJECT. IF GRILLES, REGISTERS, OR DIFFUSERS SPECIFIED ARE NOT COMPATIBLE WITH THE TYPE OF CEILING CONSTRUCTION, THE CONTRACTOR SHALL ORDER PROPER TYPE OF GRILLE, REGISTER, OR DIFFUSER TO BE COMPATIBLE WITH THE CEILING.

MECHANICAL SHEET INDEX

M-001	MECHANICAL LEGEND & GENERAL NOTES
MD101	MECHANICAL DEMOLITION FIRST FLOOR PLAN
M-101	HVAC FIRST FLOOR PLAN
M-501	MECHANICAL DETAILS
M-601	MECHANICAL SCHEDULES

STUDIO SW ARCHITECTS
2101 Mountain Road NW Suite B | Albuquerque NM 87104
505-843-9639 | www.studioswarch.com

© 2021 Studio Southwest Architects, Inc. Duplication or reproduction by any means without the express written consent of Studio Southwest Architects, Inc. is a violation of federal and international law. The information contained in this document is the intellectual property of Studio Southwest Architects, Inc. and all rights thereto are reserved.

CONSULTANTS

TESTUDO ENGINEERING
7007 Wyoming Blvd NE Suite E-1
Albuquerque, NM 87109
WWW.TESTUDOENG.COM PH:505-554-1282

Architect Engineer

WAYNE A. YEVOLI STATE OF NEW MEXICO 23914 REGISTERED PROFESSIONAL ENGINEER 08/14/2025

SFC HONDO FIRE STATION

645 OLD LAS VEGAS HIGHWAY
SANTA FE, NM 87505

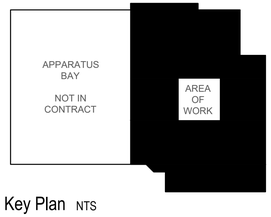

Key Plan NTS

No	Date	Description
Revision Schedule		

ISSUE:	100% CONSTRUCTION DOCUMENTS
PROJECT NUMBER:	2502
FILE:	25006_M-001.dwg
DRAWN BY:	NS
CHECKED BY:	DCG
DATE:	AUGUST 14, 2025

SHEET TITLE

MECHANICAL LEGEND & GENERAL NOTES

M-001

8/14/2025 12:09:10 PM
Z:\Projects 2025\25006 Hondo-SF Fire Station Remodel\Cad\Drawings\25006_MD101.dwg

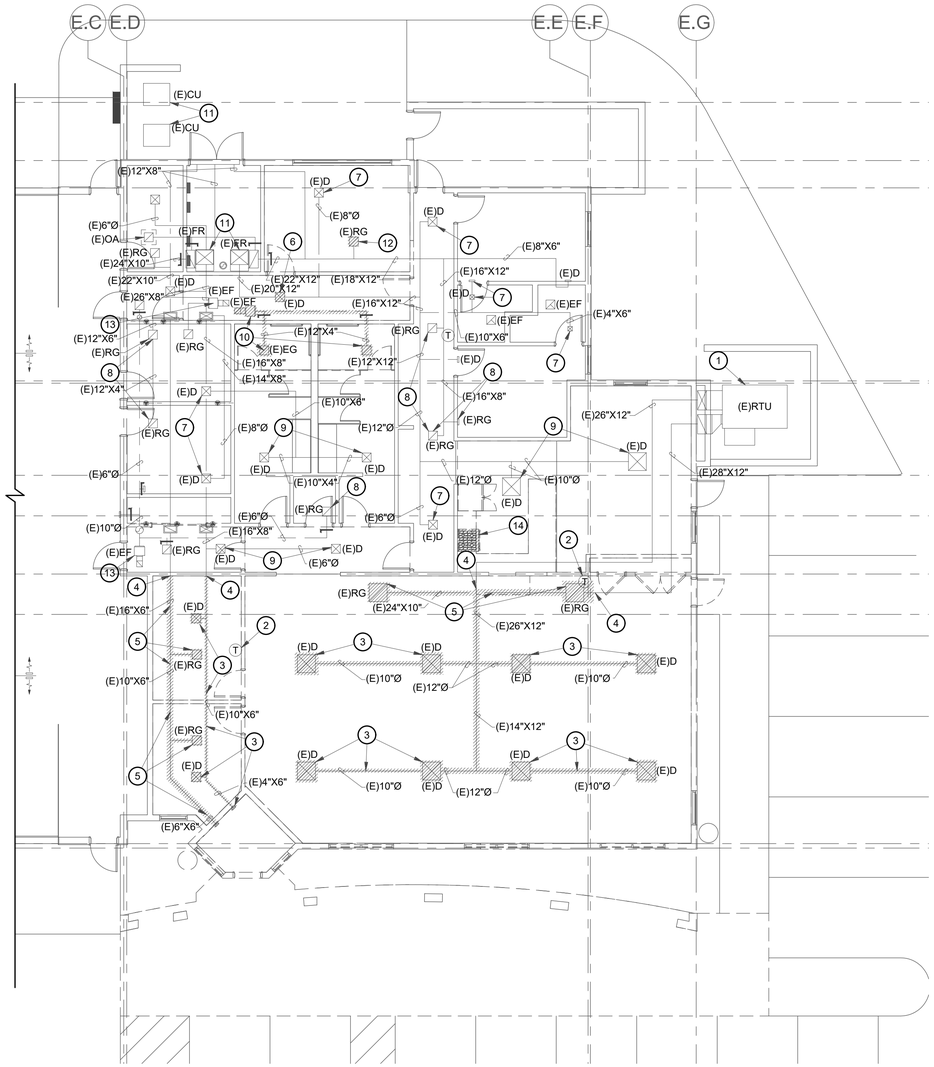

MECHANICAL DEMOLITION PLAN

SCALE: 1/8" = 1'-0"

N

GENERAL NOTES

A. REFER TO SHEET M-501 FOR DETAILS.

B. REFER TO SHEET M-001 FOR GENERAL NOTES, LEGEND & SCHEDULES.

KEYED NOTES

1. EXISTING ROOF TOP UNIT TO REMAIN AND BE REUSED IN NEW WORK. CONTRACTOR TO FIELD VERIFY EXISTING CONDITION AND INSPECT EXISTING UNIT PROVIDING ALL PARTS NEEDED FOR A FULLY FUNCTIONAL SYSTEM.
2. EXISTING THERMOSTAT TO BE REMOVED AND AND REUSED IN NEW WORK. REFER TO NEW WORK FOR LOCATION.
3. EXISTING SUPPLY AIR DIFFUSER AND ASSOCIATED DUCT WORK TO BE REMOVED BACK TO POINT INDICATED AND CAPPED FOR CONNECTION IN NEW WORK.
4. REMOVE EXISTING SUPPLY/RETURN AIR DUCTWORK BACK TO THIS POINT. CONTRACTOR TO PREPARE DUCT FOR RECONNECTION IN NEW WORK.
5. EXISTING RETURN AIR GRILLE AND ASSOCIATED DUCT WORK TO BE REMOVED BACK TO POINT INDICATED AND CAPPED FOR CONNECTION IN NEW WORK.
6. EXISTING DIFFUSER TO BE REMOVED ALONG WITH ASSOCIATED DUCTWORK BACK TO MAIN AND CAPPED.
7. EXISTING DIFFUSER TO REMAIN AND BE REUSED.
8. EXISTING RETURN AIR GRILLE TO REMAIN AND BE REUSED.
9. EXISTING SUPPLY AIR DIFFUSER TO BE CLEANED AND AND REUSED.
10. EXISTING EXHAUST FAN TO BE REMOVED COMPLETE ALONG WITH ALL ASSOCIATED DUCTWORK AND EXHAUST GRILLES. CONTRACTOR TO FIELD VERIFY EXISTING CONDITION AND EXACT LOCATION.
11. EXISTING UNIT TO REMAIN AND BE REUSED.
12. EXISTING RETURN AIR GRILLE TO BE REMOVED AND RELOCATED IN NEW WORK.
13. EXISTING EXHAUST FAN TO REMAIN AND BE REUSED.
14. CONTRACTOR TO REMOVE EXISTING RANGE HOOD AND REPLACE WITH NEW IN NEW WORK. FIELD VERIFY EXISTING CONDITIONS AND EXACT LOCATION.

STUDIO SW ARCHITECTS
2101 Mountain Road NW Suite B | Albuquerque NM 87104
505-843-9639 | www.studioswarch.com

© 2021 Studio Southwest Architects, Inc. Duplication or reproduction by any means without the express written consent of Studio Southwest Architects, Inc. is a violation of federal and international law. The information contained in this document is the intellectual property of Studio Southwest Architects, Inc. and all rights thereto are reserved.

CONSULTANTS

TESTUDO ENGINEERING
7007 Wyoming Blvd NE Suite E-1
Albuquerque, NM 87109
WWW.TESTUDOENG.COM PH:505-554-1282

Architect Engineer

WAYNE A. YEVOLI
STATE OF NEW MEXICO
23914
REGISTERED PROFESSIONAL ENGINEER
08/14/2025

SFC HONDO FIRE STATION

645 OLD LAS VEGAS HIGHWAY
SANTA FE, NM 87505

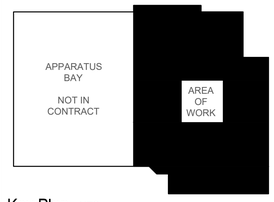

Key Plan NTS

No	Date	Description
Revision Schedule		

ISSUE:	100% CONSTRUCTION DOCUMENTS
PROJECT NUMBER:	2502
FILE:	25006_MD101.dwg
DRAWN BY:	NS
CHECKED BY:	DCG
DATE:	AUGUST 14, 2025

SHEET TITLE

MECHANICAL DEMOLITION PLAN

MD101

8/14/2025 12:09:15 PM

Z:\Projects 2025\25006 Hondo-SF Fire Station Remodel\Cad\Drawings\25006_M-101.dwg

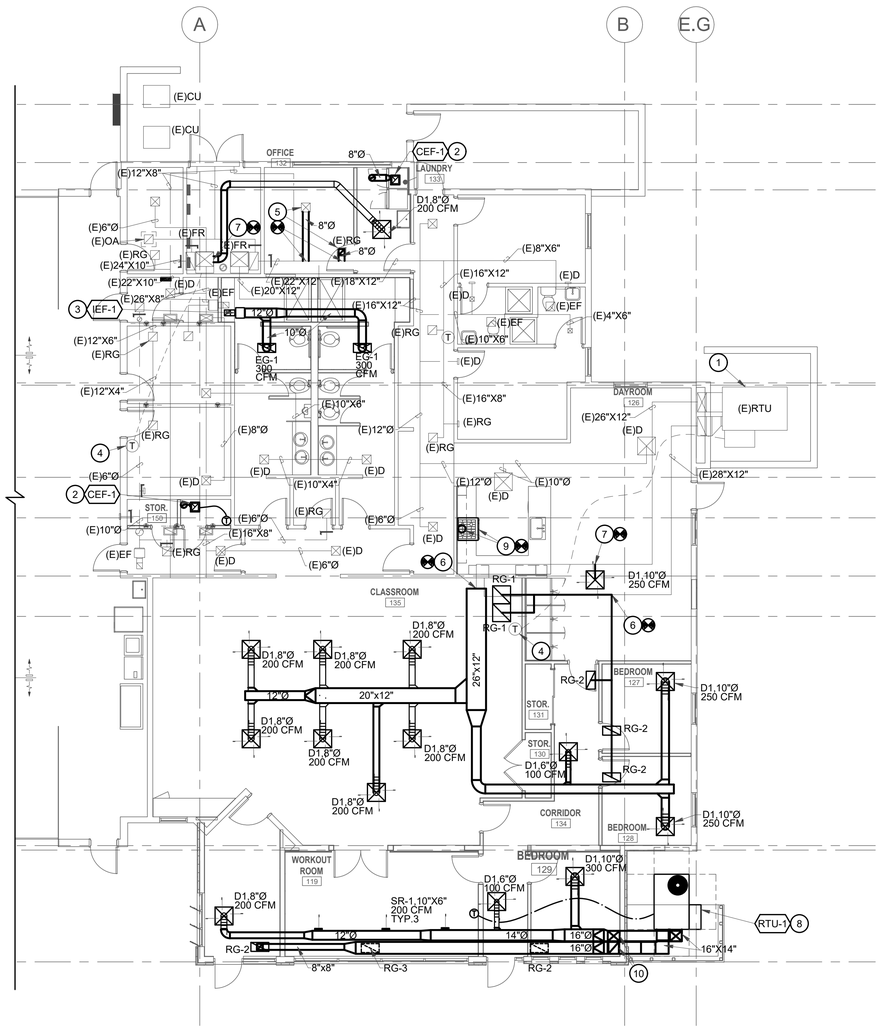

HVAC PLAN

SCALE: 1/8" = 1'-0"

N

GENERAL NOTES

A. REFER TO SHEET M-501 FOR DETAILS.

B. REFER TO SHEET M-001 FOR GENERAL NOTES, LEGEND & SCHEDULES.

KEYED NOTES

1. EXISTING UNIT TO BE RE-BALANCED TO 2250 CFM, CONTRACTOR TO PROVIDE ALL PARTS NEEDED FOR A FULLY FUNCTIONAL SYSTEM INCLUDING ANY BELTS, SHEAVES, ECT..
2. INSTALL NEW CEILING EXHAUST FAN IN LOCATION SHOWN PER ALL MANUFACTURES CLEARANCES AND REQUIREMENTS. EXTEND DUCTWORK UP THRU ROOF AS SHOWN AND PROVIDE WITH FACTORY APPROVED ROOF CAP.
3. INSTALL NEW INLINE EXHAUST FAN TO BE INSTALL IN LOCATION SHOWN PER ALL MANUFACTURES CLEARANCES AND REQUIREMENTS. EXTEND DUCTWORK UP THRU ROOF AS SHOWN AND PROVIDE WITH FACTORY APPROVED ROOF CAP.
4. NOW LOCATION OF EXISTING THERMOSTAT CONTRACTOR TO ENSURE THERMOSTAT IS FULLY FUNCTIONAL.
5. NEW LOCATION OF EXISTING DIFFUSER/GRILLE EXTEND NEW DUCTWORK (MATCHING EXISTING SIZES) AND CONNECT TO MAIN AS SHOWN. CONTRACTOR TO FIELD VERIFY EXISTING CONDITIONS AND EXACT LOCATION.
6. EXTEND NEW DUCTWORK AND CONNECT TO EXISTING DUCTWORK (MATCHING EXISTING SIZES) AT THIS LOCATION, CONTRACTOR TO FIELD VERIFY EXISTING CONDITIONS AND EXACT LOCATION.
7. EXTEND NEW DUCTWORK AND CONNECT TO EXISTING DUCTWORK (SIZE PER PLAN) AT THIS LOCATION, CONTRACTOR TO FIELD VERIFY EXISTING CONDITIONS AND EXACT LOCATION.
8. INSTALL NEW ROOF TOP UNIT ON CONCRETE PAD PER ALL MANUFACTURES CLEARANCES AND REQUIREMENTS. EXTEND DUCTWORK AS SHOWN SIZE PER PLANS AND PROVIDE ALL DUCTWORK WITH 1" A.L.. CONTRACTOR FIELD VERIFY THAT ALL CLEARANCES KEPT WITH IN AREA OF INSTALLATIONS.
9. OWNER PROVIDED AND CONTRACTOR INSTALLED RANGE HOOD. INSTALL PER ALL MANUFACTURES CLEARANCES AND REQUIREMENTS. EXTEND 10"Ø EXHAUST AIR DUCTWORK UP THROUGH ROOF AND PROVIDED WITH FACTORY APPROVED ROOF CAP.
10. EXTEND DUCTWORK THRU WALL AND EXTEND UP IN ARCHITECTURAL PROVIDED CHASE TO CEILING SPACE AND ROUTE AS SHOW.

STUDIO SW ARCHITECTS
2101 Mountain Road NW Suite B | Albuquerque NM 87104
505-843-9639 | www.studioswarch.com

© 2021 Studio Southwest Architects, Inc. Duplication or reproduction by any means without the express written consent of Studio Southwest Architects, Inc. is a violation of federal and international law. The information contained in this document is the intellectual property of Studio Southwest Architects, Inc. and all rights thereto are reserved.

CONSULTANTS

TESTUDO ENGINEERING
7007 Wyoming Blvd NE Suite E-1
Albuquerque, NM 87109
WWW.TESTUDOENG.COM PH:505-554-1282

Architect Engineer

WAYNE A. YEVOLI
STATE OF NEW MEXICO
23914
REGISTERED PROFESSIONAL ENGINEER
08/14/2025

SFC HONDO FIRE STATION

645 OLD LAS VEGAS HIGHWAY
SANTA FE, NM 87505

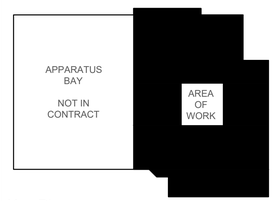

Key Plan NTS

No	Date	Description
		Revision Schedule

ISSUE:	100% CONSTRUCTION DOCUMENTS
PROJECT NUMBER:	2502
FILE:	25006_M-101.dwg
DRAWN BY:	NS
CHECKED BY:	DCG
DATE:	AUGUST 14, 2025

SHEET TITLE

HVAC PLAN

M-101

8/14/2025 12:09:18 PM
Z:\Projects 2025\25006 Hondo-SF Fire Station Remodel\Cadd\Drawings\25006_M-501.dwg

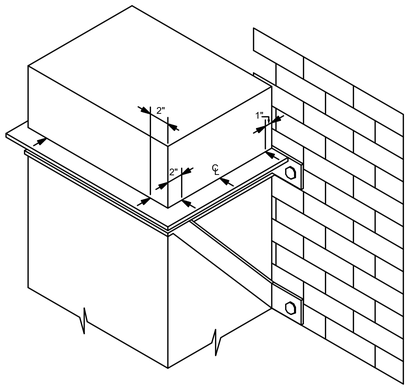

NOTES:
1. BRACKETS ARE SIZED FOR 12 FEET OF DUCT MAXIMUM.
2. LOCATE DUCTS AGAINST WALL OR MAXIMUM OF 2" AWAY FROM WALL.
3. EACH WALL SHALL SATISFY THE FOLLOWING CRITERIA UNLESS OTHER ANALYSIS IS MADE,
4. TENSILE LOAD = 3/8" DUCT WEIGHT; SAFETY FACTOR 4,

DUCT SUPPORTS FROM WALL DETAIL

SCALE: NONE

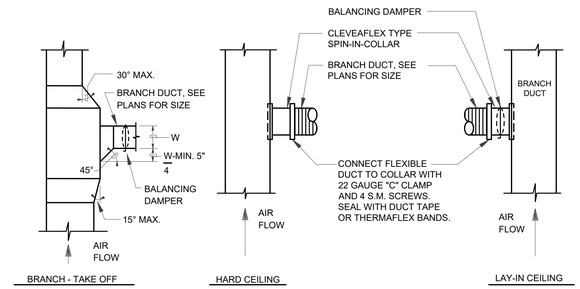

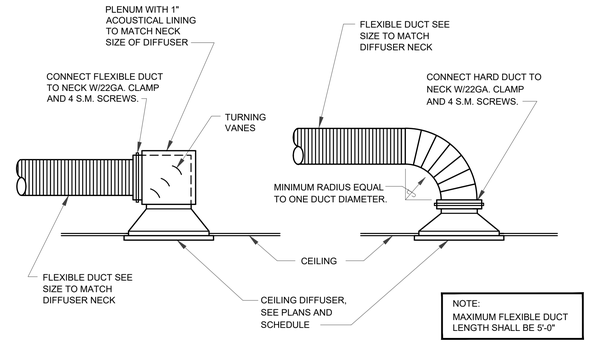

DIFFUSER CONNECTION DETAIL

SCALE: NONE

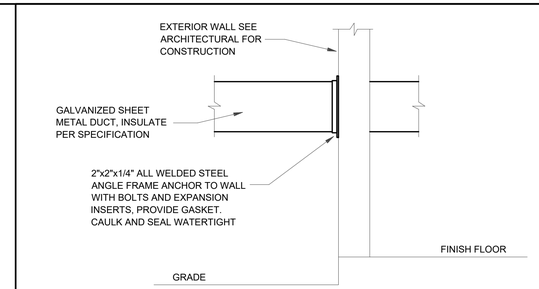

DUCT THROUGH EXTERIOR WALL DETAIL

SCALE: NONE

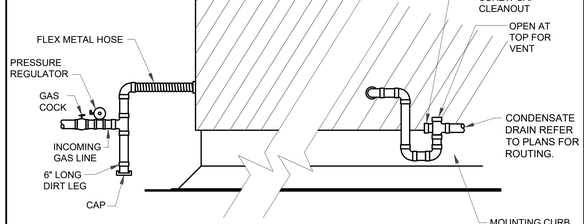

RTU UNIT PIPING DETAIL

SCALE: NONE

BOTTOM PIECE FIRST, THEN SIDES, THEN THE TOP.

TYPICAL DUCTWORK INSULATION AND METAL JACKET INSTALLATION ON STRAIGHT RUNS.

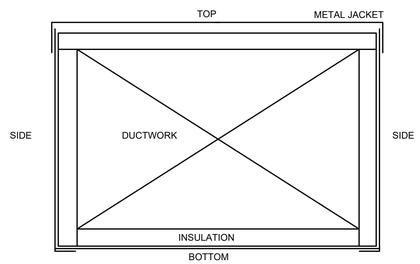

EXTERIOR DUCTWORK METAL

SCALE: NONE

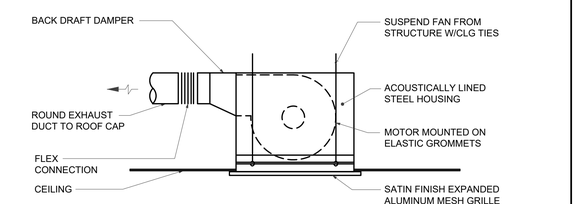

CEILING MOUNTED EXHAUST FAN DETAIL

SCALE: NONE

STUDIO SW ARCHITECTS
2101 Mountain Road NW Suite B | Albuquerque NM 87104
505-843-9639 | www.studioswarch.com

© 2021 Studio Southwest Architects, Inc. Duplication or reproduction by any means without the express written consent of Studio Southwest Architects, Inc. is a violation of federal and international law. The information contained in this document is the intellectual property of Studio Southwest Architects, Inc. and all rights thereto are reserved.

CONSULTANTS

TESTUDO ENGINEERING
7007 Wyoming Blvd NE Suite E-1
Albuquerque, NM 87109
WWW.TESTUDOENG.COM PH:505-554-1282

Architect Engineer

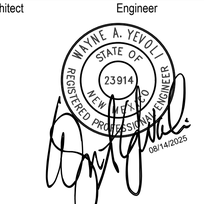

SFC HONDO FIRE STATION

645 OLD LAS VEGAS HIGHWAY
SANTA FE, NM 87505

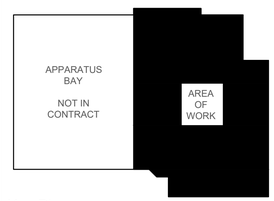

Key Plan NTS

No	Date	Description
Revision Schedule		

ISSUE:	100% CONSTRUCTION DOCUMENTS
PROJECT NUMBER:	2502
FILE:	25006_M-501.dwg
DRAWN BY:	NS
CHECKED BY:	DCG
DATE:	AUGUST 14, 2025

SHEET TITLE

MECHANICAL DETAILS

M-501

8/14/2025 12:09:26 PM

Z:\Projects 2025\25006 Hondo-SF Fire Station Remodel\Cadd\Drawings\25006_M-601.dwg

ROOF TOP AIR CONDITIONING UNIT SCHEDULE

MARK	FAN DATA				COOLING DATA				HEATING DATA			ELECTRICAL DATA			REFRIGERANT	APPROX. WT.	MANUFACTURER
	CFM	BHP	EXT. SP (IN)	OUTSIDE AIR CFM	OUTSIDE AIR °F	TOTAL (MBH)	SENS. (MBH)	SEER	OUTSIDE AIR °F	INPUT (MBH)	OUTPUT (MBH)	VOLT/PH/Hz	MCA	MOCP		(LBS)	CARRIER MODEL #
RTU-1	1200	.34	.75	400	90	40	35	17.2	40	110	82	208/3/60	21	25	R-454B	900	48GEEM04C2A5

NOTES:
1. UNITS ARE SELECTED AT AN ELEVATION OF 7200 FEET ABOVE SEA LEVEL. PROVIDE PROPER BURNERS AND ORIFICES FOR SITE ELEVATION.
2. INDOOR FAN SHALL BE BELT DRIVEN AND SHALL RUN CONTINUOUSLY DURING OCCUPIED PERIODS.
3. EXTERNAL STATIC PRESSURE DOES NOT INCLUDE ANY PRESSURE DROP ASSOCIATED WITH ROOFTOP UNIT ACCESSORIES.
4. PROVIDE ALL REQUIRED SERVICE AND OPERATIONAL CLEARANCES, INCLUDING ALL REQUIRED CLEARANCES TO COMBUSTIBLES AND ALL CLEARANCES REQUIRED BY NEC ARTICLE 110.

ACCESSORIES:
1. UNIT TO BE INSTALLED ON CONCRETE PAD ON GROUND TO ALLOW UNIT TO SIT LEVEL.
2. PROVIDE WITH MICROMETL ECONOMIZER WITH BAROMETRIC RELIEF, FACTORY-WIRED TO ALLOW SINGLE-POINT POWER CONNECTION TO ROOFTOP UNIT.
3. COMPRESSOR SHORT CYCLE PROTECTION
4. ELECTRONIC PROGRAMMABLE THERMOSTAT WITH AUTO HEAT/COOL SWITCHOVER AND KEYPAD LOCKOUT CAPABLILTY. ALL CONTROL WIRING SHALL BE PROVIDED AND INSTALLED BY DIVISION 15.
5. 2" FILTERS EQUAL TO MERV 13 MINIMUM.
6. CONDENSER COIL HAIL GUARD ASSEMBLY.
7. OUTSIDE AIR HOOD WITH MOTORIZED OUTSIDE AIR DAMPER- DAMPER SHALL CLOSE WHEN INDOOR FAN IS OFF.
8. BAROMETRIC RELIEF.

APPROVED EQUIVALENT MANUFACTURER: DAIKIN, TRANE, YORK

FAN SCHEDULE

MARK	SERVICE/ MOUNTING	CFM	EXT. SP IN	MOTOR RPM	MOTOR WATTS	MOTOR HP	ELECTRICAL VOLTS	ELECTRICAL PHASE	SONES	DRIVE	MANUFACTURER MODEL #
IEF-1	RESTROOM/ CEILING	600	.5	1600	329		115	1	3.7	DIRECT	GREENHECK CSP-A780
CEF-1	LAUNDRY/ CEILING	200	.5	1385	38		115	1	2.0	DIRECT	GREENHECK CSP-A390-VG
CEF-2	IT/ CEILING	200	.5	1385	38		115	1	2.0	DIRECT	GREENHECK CSP-A390-VG

NOTES:
1. FANS ARE SELECTED AT 7200 FT ABOVE SEA LEVEL.
2. PROVIDE ALL FANS WITH VIBRATION ISOLATION.
3. PROVIDE EACH DIRECT DRIVE CEILING FAN WITH SOLID-STATE SPEED CONTROLLER MOUNTED ON FAN HOUSING.
4. REFER TO SEQUENCE OF CONTROL.
5. DIVISION 16 SHALL INTERLOCK CEF-1 WITH LIGHTS. REFER TO ELECTRICAL DRAWINGS.
6. DIVISION 16 SHALL INTERLOCK IEF-1 WITH EXISTING CONTROLS IN RESTROOM. REFER TO ELECTRICAL DRAWINGS.
7. DIVISION 16 SHALL INTERLOCK CEF-2 WITH THERMOSTAT (A.D.J.).
8. PROVIDE ALL SERVICE AND OPERATIONAL CLEARANCES AS REQUIRED, INCLUDING ALL CLEARANCES REQUIRED BY NEC ARTICLE 110.
9. REFER TO MANUFACTURER DATA FOR EQUIPMENT WEIGHTS.

APPROVED EQUIVALENT MANUFACTURER: COOK, TWIN CITY

AIR DISTRIBUTION DEVICE SCHEDULE

MARK	DESCRIPTION	MOUNTING	MANUFACTURER MODEL #	MATERIAL	FINISH	REMARKS
D1	CEILING SUPPLY DIFFUSER	LAY-IN CEILING	PRICE SCD	ALUMINUM	WHITE BAKED ENAMEL	24/24 FULLY LOUVERED FACE, 4-WAY THROW OR AS SHOWN, NECK SIZE AS INDICATED (CONTRACTOR TO RELD VERIFY MOUNTING TYPE)
RG1	CEILING RETURN GRILLE	LAY-IN CEILING	PRICE 80	ALUMINUM	WHITE BAKED ENAMEL	24/24 PANEL 1/2"X1/2"X1/2" EGG CRATE CORE
RG2	CEILING RETURN GRILLE	LAY-IN CEILING	PRICE 80	ALUMINUM	WHITE BAKED ENAMEL	12/24 PANEL 1/2"X1/2"X1/2" EGG CRATE CORE
RG3	SIDEWALL EXHAUST RETURN GRILLE	SURFACE SIDEWALL	PRICE 530 D/L	ALUMINUM	WHITE BAKED ENAMEL	35 DEG FIXED DEFLECTION, 1/2" BLADE SPACING, BLADES PARALLEL TO SHORT DIMENSION, AND NECK SIZE AS INDICATED
SR-1	SIDEWALL SUPPLY DIFFUSER	DUCT MOUNTED/SIDE WALL	PRICE 520 D/S	ALUMINUM	WHITE BAKED ENAMEL	DOUBLE DEFLECTION, 3/4" BLADE SPACING, FRONT BLADES PARALLEL TO SHORT DIMENSION, AND NECK SIZE AS INDICATED WITH OBD.
EG-1	SIDEWALL EXHAUST RETURN GRILLE	SURFACE SIDEWALL	PRICE 530 D/L	ALUMINUM	WHITE BAKED ENAMEL	35 DEG FIXED DEFLECTION, 1/2" BLADE SPACING, BLADES PARALLEL TO SHORT DIMENSION, AND NECK SIZE AS INDICATED

NOTES:
1. PROVIDE INTEGRAL BALANCING DAMPERS ON ALL APPLICATIONS WHERE A BRANCH DUCT DAMPER IS NOT POSSIBLE. DAMPERS SHALL BE ADJUSTABLE THROUGH FACE OF AIR DEVICE AND SHALL BE OPPOSED BLADE TYPE WHERE AVAILABLE.
2. PROVIDE TAPERED TRANSITIONS FOR ALL SUPPLY DIFFUSERS WITH NECK SIZES DIFFERENT THAN SUPPLY DUCT RUN-OUT SIZES.
3. ALL AIR DISTRIBUTION DEVICES SHALL BE CONSTRUCTED WITH MATERIALS AND FINISHES SUITABLE FOR THEIR USE.
4. PATCH AND SEAL ALL WALL PENETRATIONS WEATHERTIGHT AT TYPE LX DEVICES.
5. PROVIDE TYPE DX AIR DEVICES WITH ADJUSTABLE MINIMUM FLOW STOPS AND SET MINIMUM AIRFLOWS AS INDICATED ON PLANS.

APPROVED EQUIVALENT MANUFACTURER: PRICE, KRUGER

STUDIO SW ARCHITECTS
2101 Mountain Road NW Suite B | Albuquerque NM 87104
505-843-9639 | www.studioswarch.com

© 2021 Studio Southwest Architects, Inc. Duplication or reproduction by any means without the express written consent of Studio Southwest Architects, Inc. is a violation of federal and international law. The information contained in this document is the intellectual property of Studio Southwest Architects, Inc. and all rights thereto are reserved.

CONSULTANTS

TESTUDO ENGINEERING
7007 Wyoming Blvd NE Suite E-1
Albuquerque, NM 87109
WWW.TESTUDOENG.COM PH:505-554-1282

Architect Engineer

WAYNE A. YEVOLI STATE OF NEW MEXICO 23914 REGISTERED PROFESSIONAL ENGINEER 08/14/2025

SFC HONDO FIRE STATION

645 OLD LAS VEGAS HIGHWAY
SANTA FE, NM 87505

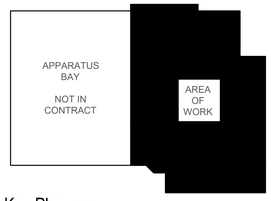

Key Plan NTS

No	Date	Description
Revision Schedule		

ISSUE:	100% CONSTRUCTION DOCUMENTS
PROJECT NUMBER:	2502
FILE:	25006_M-601.dwg
DRAWN BY:	NS
CHECKED BY:	DCG
DATE:	AUGUST 14, 2025

SHEET TITLE

MECHANICAL SCHEDULES

M-601

8/14/2025 12:12:55 PM

Z:\Projects 2025\25006 Hondo-SF Fire Station Remodel\Cadd\Drawings\25006_E-001.dwg

ELECTRICAL SYMBOL LEGEND

(ALL SYMBOLS SHOWN ARE NOT NECESSARILY USED ON THE DRAWINGS)

GENERAL

SYMBOL	DESCRIPTION
	CROSSHATCHING DEPICTS ITEMS TO BE REMOVED (LIGHT FIXTURES, SWITCHES, RECEPTACLES, CONDUIT AND WIRING, ETC.)
	HOME-RUN CONDUIT.
	CONDUCTOR TICK MARKS: NEUTRAL, PHASE, SWITCHED, AND GROUND CONDUCTORS RESPECTIVELY.
	CAPPED CONDUIT / CONDUIT STUB-OUT.
	CONDUIT SEAL.
(#)	ELECTRICAL KEYED NOTE TAG.
E-16	KITCHEN ITEM TAG, SEE KITCHEN EQUIPMENT ELECTRICAL CONNECTION SCHEDULE.
B–2	MECHANICAL UNIT TAG (EXAMPLE: BOILER B-2 INDICATED), SEE MECHANICAL EQUIPMENT SCHEDULE.
O.F.C.I.	OWNER FURNISHED, CONTRACTOR INSTALLED.
E^{OH}	OVERHEAD PRIMARY ELECTRICAL LINE.
E_{UG}	PRIMARY ELECTRICAL UNDERGROUND FEEDER.
E.GR.	EQUIPMENT GROUND.
AFF	ABOVE FINISH FLOOR.
AC	ABOVE COUNTER.
WR	WEATHER-RESISTANT.
GFCI	GROUND FAULT CIRCUIT INTERRUPTER.
AHJ	AUTHORITY HAVING JURISDICTION.
UNO	UNLESS NOTED OTHERWISE.
$ $a	SINGLE-POLE WALL SWITCH. SUBSCRIPT DESIGNATES CONTROL OF PARTICULAR LIGHTING FIXTURES.
$3 $4	THREE-WAY AND FOUR-WAY SWITCHES, RESPECTIVELY.
$WR	WEATHER-RESISTANT SWITCH.
$K	KEY-OPERATED SWITCH.
$D	DIMMER SWITCH, 1200W MINIMUM WATTAGE.
$TT	MECHANICALLY WOUND TWIST-TIMER SWITCH OR ELECTRONIC TIME SWITCH.
$T	THERMAL SWITCH.
$OC	OCCUPANCY SENSOR SWITCH.
$OCD	DUAL-TECHNOLOGY OCCUPANCY DIMMER SWITCH.
$OCF	DUAL-TECHNOLOGY OCCUPANCY SENSOR WITH FAN DELAY CONTROL.
$3OC	3-WAY / MULTI-WAY OCCUPANCY SENSOR SWITCH.
$EC	EVAPORATIVE COOLER SWITCH.
$F	PADDLE FAN / LIGHT CONTROL SWITCHES. SWITCHES ALLOW INDEPENDENT CONTROL OF FAN SPEED AND LIGHTING.
$P	PILOT SWITCH.
OCS	LIGHTING CONTROL OCCUPANCY SENSOR, CEILING MOUNTED.
PC	PHOTOCELL.
	DAYLIGHT HARVESTING PHOTOSENSOR, CEILING MOUNTED.
C	2'X4' LAY-IN LIGHTING FIXTURE (TROFFER), TYPE INDICATED BY LETTER (TYPICAL).
EM C	"EM" INDICATES LIGHTING FIXTURE IS SUPPLIED WITH AN EMERGENCY BATTERY PACK.
	1'X4' SURFACE MOUNTED LIGHTING FIXTURE.
	1'X4' RECESSED (FLANGED) MOUNTED LIGHTING FIXTURE.
	2'X2' LAY-IN LIGHTING FIXTURE (TROFFER).
	UTILITY STRIP FIXTURE.
	LINEAR PENDANT MOUNTED LIGHTING FIXTURE, LENGTH AS INDICATED.
	4' WALL BRACKET MOUNTED LIGHTING FIXTURE.
	WALL BRACKET LIGHTING FIXTURE.
	POLE MOUNTED AREA LIGHTING FIXTURE, SINGLE-HEAD.
L	POLE MOUNTED AREA LIGHTING FIXTURE, DOUBLE-HEAD.
	RECESSED DOWNLIGHT FIXTURE.
	SURFACE MOUNTED DRUM TYPE LIGHTING FIXTURE.
	BOLLARD LIGHTING FIXTURE.
	HIGH-BAY LIGHTING FIXTURE.
	LOW-BAY LIGHTING FIXTURE.
	FLUSH IN-GROUND LIGHTING FIXTURE.
	WALL SCONCE LIGHTING FIXTURE.
	STEP LIGHT LIGHTING FIXTURE.
	PENDANT HUNG DECORATIVE LIGHTING FIXTURE.
	GOOSENECK MOUNTED LIGHTING FIXTURE.
	TRACK MOUNTED LIGHTING ASSEMBLY, ONE FIXTURE HEAD INDICATED.
	TWIN-EYE EMERGENCY LIGHTING UNIT WITH BATTERY BACK-UP. TYPE "EM", REFER TO LUMINAIRE SCHEDULE.
	EXTERIOR EMERGENCY LIGHTING UNIT WITH BATTERY BACK-UP. TYPE "WEM", REFER TO LUMINAIRE SCHEDULE.
	EXIT SIGN, SINGLE FACE INDICATED BY SHADED QUADRANT. TYPE "EX", REFER TO LUMINAIRE SCHEDULE.
	EXIT SIGN, DOUBLE-FACED, DIRECTIONAL ARROWS INDICATED.
	COMBO EXIT SIGN/EMERGENCY TWIN-EYE UNIT TYPE "XEM", REFER TO LUMINAIRE SCHEDULE.
	PADDLE FAN, WITH OR WITHOUT LIGHT PER LUMINAIRE SCHEDULE.
	J-BOX WITH FLEXIBLE CONDUIT CONNECTION TO LAY-IN LIGHTING FIXTURES.

LIGHTING

POWER

SYMBOL	DESCRIPTION
J	CEILING JUNCTION BOX.
J	WALL JUNCTION BOX.
#	DUPLEX RECEPTACLE, 18"AFF U.N.O. (#) INDICATES CIRCUIT.
GFCI	GFCI PROTECTED DUPLEX RECEPTACLE. RECEPTACLES WITH TRIP RESET SHALL BE IN READILY ACCESSIBLE LOCATION.
TR	TAMPER RESISTANT RECEPTACLE.
	QUADPLEX RECEPTACLE, 18" AFF TO CENTER.
	GROUND FAULT CIRCUIT INTERRUPTER (GFCI) DUPLEX RECEPTACLE WITH WEATHER-RESISTANT (WR) COVER.
OR CNT	SPLIT-WIRED DUPLEX RECEPTACLE
	CEILING MOUNTED DUPLEX RECEPTACLE.
OR	SPECIAL RECEPTACLE, TYPE AS NOTED.
	FLUSH FLOOR MOUNTED DUPLEX RECEPTACLE.
IG	ISOLATED GROUND DUPLEX RECEPTACLE
USB	DUPLEX RECEPTACLE WITH BUILT-IN USB CHARGER OUTLET.
HDMI	GANGABLE 3-COMPARTMENT MEDIA CENTER.
	CABLE TRAY.
	MULTI-RECEPTACLE RACEWAY (PLUGMOLD).
	SURFACE MOUNTED PANELBOARD, REFER TO ASSOCIATED PANEL SCHEDULE.
	FLUSH MOUNTED PANELBOARD, REFER TO ASSOCIATED PANEL SCHEDULE.
	DISTRIBUTION POWER PANEL, REFER TO ASSOCIATED PANEL SCHEDULE.
T	DRY-TYPE, STEP-DOWN / STEP-UP TRANSFORMER.
60/3	NON-FUSED DISCONNECT SWITCH, NEMA 3R IF OUTSIDE, AMPS / POLES INDICATED.
60/3/45	FUSED DISCONNECT SWITCH, NEMA 3R IF OUTSIDE, AMPS/ POLES / FUSE SIZE INDICATED.
	MOTOR STARTER.
60/3/45	COMBINATION MOTOR STARTER/FUSED DISCONNECT SWITCH, NEMA 3R IF OUTSIDE.
2	MOTOR, HP SIZE AS INDICATED, "F" = FRACTIONAL HORSEPOWER.
	CLOCK.
	COMBINATION CLOCK/SPEAKER UNIT.
S	SPEAKER, CEILING MOUNTED
S	SURFACE MOUNTED SOUND SYSTEM SPEAKER.
M	MICROPHONE OUTLET.
CIS	CALL-IN SWITCH (PUSH-TO-CALL) FOR INTERCOM SYSTEM.
T	THERMOSTAT
	COMBINATION VOICE/DATA OUTLET, UP 18" U.N.O.
	FLUSH CEILING VOICE/DATA OUTLET.
	FLUSH FLOOR VOICE/DATA OUTLET.
TV	CATV OUTLET
PTZ	SURVEILLANCE CAMERA. PTZ = PAN, TILT, ZOOM. WEATHER-RESISTANT IF LOCATED ON BUILDING EXTERIOR.
	EMERGENCY PUSH BUTTON.
	PROJECTOR.
CR	DOOR ACCESS CARD READER.
I	INTERCOM HEAD-END UNIT.
	DOORBELL SYSTEM PUSHBUTTON.
B	DOORBELL/CHIME.
M	MAGNETIC DOOR LOCK.
WAP	WIRELESS ACCESS POINT.
	DOOR OPERATOR PUSH-PAD UNIT (ADA COMPLIANT).
	MODULAR FURNITURE POWER CONNECTION POINT.
	MOTION SENSOR FOR SECURITY/INTRUSION ALARM SYSTEM.
S	SECURITY/INTRUSION ALARM SYSTEM DOOR SWITCH.

SPECIAL SYSTEMS

FIRE ALARM

SYMBOL	DESCRIPTION
D	FIRE ALARM DUCT SMOKE DETECTOR.
	FIRE ALARM STROBE UNIT.
	FIRE ALARM AUDIO/STROBE UNIT.
	FIRE PROTECTION SPRINKLER SYSTEM POST INDICATOR VALVE.
	FIRE ALARM SMOKE DETECTOR.
H	FIRE ALARM HEAT DETECTOR.
CO	CARBON MONOXIDE DETECTOR.
	CEILING MOUNTED FIRE ALARM AUDIO/STROBE UNIT.
F	FIRE ALARM MANUAL PULL STATION.
FACP	FIRE ALARM CONTROL PANEL (FACP).
FARA	FIRE ALARM REMOTE ANNUNCIATOR (FARA).
	RELAY INTERFACE

ELECTRICAL GENERAL NOTES

A. ALL ELECTRICAL WORK SHALL COMPLY WITH THE 2020 NATIONAL ELECTRICAL CODE (NEC) AND REGULATIONS OF STATE AND LOCAL AUTHORITIES HAVING JURISDICTION (AHJ) IN A NEAT AND WORKMANLIKE MANNER.

B. CONTRACTOR SHALL COORDINATE WITH SERVING UTILITY COMPANY NEW SERVICE DEPARTMENT AND OBTAIN A PROJECT SPECIFIC "STANDARDS LETTER" PRIOR TO BIDDING, ORDERING, OR COMMENCING WITH THE ELECTRICAL DISTRIBUTION PORTION OF THIS PROJECT.

C. ALL REQUIREMENTS OF THE SERVING UTILITY COMPANY FOR ELECTRICAL SERVICE SHALL BE INCLUDED IN THE CONTRACTOR'S BID.

D. CONTRACTOR SHALL COORDINATE WITH UTILITY COMPANIES PROVIDING TELEPHONE, CATV, AND INTERNET IN ORDER TO ASCERTAIN JOB SPECIFIC UTILITY REQUIREMENTS AND COMPLIANCE WITH THOSE REQUIREMENTS SHALL BE INCLUDED IN THE CONTRACTOR'S BID TO ENSURE SERVICE TO EACH DEMARCATION.

E. BY SUBMITTING A BID, THE CONTRACTOR AFFIRMS THEY HAVE FAMILIARIZED THEMSELVES WITH THE PROJECT SITE, PLANS, SPECIFICATIONS AND ALL APPLICABLE CODES IN ORDER TO PROVIDE A COMPREHENSIVE AND COMPLETE BID.

F. ALL DEVICES SHALL BE WHITE WITH STAINLESS STEEL PLATES, INSTALLED FOR ADA COMPLIANCE UNLESS NOTED OTHERWISE. RECEPTACLES SHALL ALL BE RATED FOR THEIR INTENDED USE AND TAMPER RESISTANT AS REQUIRED BY NEC 406.

G. ALL TELEPHONE, DATA, SECURITY, CATV, SOUND AND INTERCOM LOW VOLTAGE SYSTEMS ARE PROVIDED BY OTHERS UNLESS NOTED OTHERWISE. NOTE: * LOW VOLTAGE CONTRACTORS ARE REQUIRED TO OBTAIN INDEPENDENT PERMITS FROM THE AHJ PRIOR TO STARTING THEIR WORK.

H. UTILIZE "DEEP" 4-SQUARES WHERE REQUIRED TO COMPLY WITH NEC 314.16 EXTRA CONSIDERATION SHALL BE GIVEN TO BOXES SUPPLYING HOME-RUNS.

I. CONFIRM EXACT ROUGH-IN DIMENSIONS WITH ARCHITECTURAL DRAWINGS, AND APPLICABLE KITCHEN/APPLIANCE EQUIPMENT, AND FURNITURE/MILL-WORK PLAN(S). EXTRA CARE SHALL BE EXERCISED IN COORDINATING THE EXACT REQUIREMENT(S) OF SPECIALTY EQUIPMENT INCLUDING, BUT NOT LIMITED TO, MECHANICAL EQUIPMENT, PLUMBING EQUIPMENT, MEDICAL EQUIPMENT, OR PROCESSING EQUIPMENT.

ALL PENETRATIONS IN FIRE RATED WALLS, PARTITIONS, FLOORS, OR CEILINGS SHALL BE SEALED WITH FIRE STOPPING MATERIAL OR OTHER APPROVED METHOD(S) TO MAINTAIN THE FIRE RATED ASSEMBLY PER NEC 300.21. REFER TO ARCHITECTURAL DRAWINGS FOR THE LOCATIONS OF WALL AND FLOOR ASSEMBLIES.

ELECTRICAL DEVICES INSTALLATION SHALL COMPLY WITH ACCESSIBILITY (ADA) STATUTE ICC/ANSI 117.1 SECTION 308. SPECIFICALLY: MOUNT APPLICABLE SWITCHES, RECEPTACLES, AND ENVIRONMENTAL CONTROLS SO THAT THEY ARE LOCATED WITH THE TOP OF THE DEVICE NO HIGHER THAN 48" ABOVE FINISHED FLOOR (AFF) AND THE BOTTOM OF THE DEVICE NO LOWER THAN 15" AFF.

J. GENERAL CONTRACTOR TO SAW-CUT / REMOVE / PATCH EXISTING ARCHITECTURAL SURFACES INCLUDING BUT NOT LIMITED TO SLABS, WALLS AND ROOFS.

K. SHARED NEUTRALS ARE NOT PERMISSIBLE UNLESS NOTED OTHERWISE.

L. CONDUCTOR TICK MARKS, WHERE SHOWN, ARE SHOWN FOR CONVENIENCE ONLY. THE CONTRACTOR IS RESPONSIBLE FOR PROVIDING ALL CONDUCTORS WHETHER SHOWN OR NOT INCLUDING "TRAVELERS" AND DIMMING CONDUCTORS AS NECESSARY FOR COMPLETELY OPERATIONAL SYSTEMS.

M. BRANCH CIRCUITING SHALL BE COPPER WIRE IN CONDUIT UNLESS SPECIFICALLY NOTED OTHERWISE. MINIMUM WIRE SIZE IS #12 AWG. WHEN CONDUIT IS UTILIZED, ALL FITTINGS SHALL BE COMPRESSION TYPE AND COLOR CODING VINYL BANDS IDENTIFYING DIFFERENT SYSTEMS SHALL BE AFFIXED AT EACH BOX, PANELBOARD, AND EVERY ACCESSIBLE 10'-0"

N. THE ELECTRICAL CONTRACTOR SHALL INSTALL ALL CONDUIT REQUIRED FOR MECHANICAL SYSTEMS CONTROLS. ALL CONTROLS WIRING SHALL BE INSTALLED AND TERMINATED BY CONTROLS CONTRACTOR. COORDINATE LOCATION AND ROUTING OF CONTROLS CONDUIT WITH MECHANICAL PLANS AND WITH MECHANICAL SEQUENCE OF CONTROLS.

O. ALL PANELS AND DISTRIBUTION BOARDS, NEW/EXISTING SHALL HAVE TYPEWRITTEN DIRECTORIES AND EQUIPMENT I.D. NAMEPLATES UPON COMPLETION OF ANY ELECTRICAL MODIFICATIONS UNDER THIS CONTRACT.

P. CONTRACTOR SHALL CONSIDER AND MAKE ADJUSTMENTS IN CONDUIT/WIRE SIZE(S) TO ACCOUNT FOR VOLTAGE DROP PRIOR TO COMMENCING WITH WORK UNDER THIS CONTRACT. VOLTAGE DROP SHALL NOT EXCEED THE FOLLOWING IN ACCORDANCE WITH IECC 2018 C405.9:

FEEDERS = 2% BRANCH WIRING = 3%

Q. CONTRACTOR SHALL COMPLY WITH NEC 110.16. AFFIX PERMANENT ARC-FLASH HAZARD WARNING LABEL(S) ON ALL APPLICABLE ELECTRICAL EQUIPMENT MODIFIED OR INSTALLED UNDER THIS CONTRACT.

R. FOR ELECTRICAL DISTRIBUTION SYSTEMS HAVING A MAIN DISCONNECT RATING OF 1,000-AMPS OR MORE, CONTRACTOR SHALL OBTAIN THIRD PARTY OVER-CURRENT PROTECTION STUDY. ALL OVER-CURRENT DEVICES SHALL BE "SET" OR ADJUSTED TO COMPLY WITH COORDINATION STUDY PRIOR TO FINAL COMMISSIONING. A FULL COPY OF THE COMPLETED STUDY ALONG WITH CONTRACTOR'S CERTIFICATION OF COMPLIANCE SHALL BE INCLUDED IN THE PROJECT'S "CLOSE-OUT" DOCUMENTATION.

S. ALL EQUIPMENT AND WORKMANSHIP FURNISHED UNDER THIS CONTRACT SHALL BE WARRANTABLE TO BE FREE FROM ANY DEFECT FOR A PERIOD EQUAL TO 1-YEAR FROM THE DATE OF FINAL ACCEPTANCE BY THE OWNER.

IECC ELECTRICAL & LIGHTING COMPLIANCE

THE ELECTRICAL DESIGN ILLUSTRATED BY THESE PLANS AND SPECIFICATIONS IS IN COMPLIANCE WITH THE 2021 INTERNATIONAL ENERGY CONSERVATION CODE SECTION(S) C405, C408, C501-5, CB103.3, CB103.8, R402.4.5, R402.4.6, R404, R501-5, AND R502, AS SPECIFICALLY APPLICABLE TO THIS PROJECT AS FOLLOWS:

1. C405.2 - LIGHTING CONTROLS (MANDATORY)

   A. REFER TO LIGHTING PLAN(S) AND/OR DETAIL(S) FOR PROJECT REQUIREMENTS.

2. C405.3 - INTERIOR LIGHTING POWER REQUIREMENTS

   A. TABLE C405.3.2(1)

   ALLOWABLE INTERIOR POWER FOR THIS PROJECT IS: 1,872 WATTS
   ACTUAL INTERIOR POWER IS: 1,389 WATTS

3. C405.4 - EXTERIOR LIGHTING POWER REQUIREMENTS (MANDATORY)

   A. TABLE C405.5.2(1)
   - THIS PROVIDE IS IN LIGHTING ZONE # 2.

   B. TABLE 405.5.2(2)
   - BASE SITE ALLOWANCE: 400W
   - PARKING AREAS AND DRIVES: 0.04 W/FT^2
   - WALKWAYS/RAMPS < 10'-0" WIDE: 0.5W/LINEAR FT
   - WALKWAYS/RAMPS > 10'-0" WIDE, PLAZA AREAS, SPECIAL FEATURE AREAS: 1.10 W/FT^2
   - PEDESTRIAN AND VEHICULAR ENTRANCES AND EXITS: 14W/LINEAR FT
   - ENTRY CANOPIES: 0.25W/FT^2

   C. TABLE 405.5.2(3)
   - BUILDING FACADES: 0.075W/FT OF GROSS ABOVE-GRADE WALL AREA

   ALLOWABLE EXTERIOR POWER FOR THIS PROJECT IS: EXISTING
   ACTUAL EXTERIOR POWER IS: 180 WATTS (ADDED)

4. C405.10 - VOLTAGE DROP IN FEEDERS AND BRANCH CIRCUITS

   A. REFER TO GENERAL NOTE "P" FOR PROJECT VOLTAGE DROP LIMITATIONS.

5. C408.3 - FUNCTIONAL TESTING AND DOCUMENTATION OF LIGHTING CONTROLS.

   A. THE CONTRACTOR OR FACTORY AUTHORIZED COMMISSIONING AGENT SHALL DELIVER TO THE ENGINEER OF RECORD EVIDENCE OF THE LIGHTING CONTROLS HAVING BEEN TESTED AND PERFORMING PROPERLY PRIOR TO OBTAINING FINAL INSPECTION FROM THE AHJ.

   B. THE CONTRACTOR SHALL DELIVER TO THE OWNER, WITH A COMPLETE COPY DELIVERED TO THE ENGINEER OF RECORD, AS PART O ITS CLOSE-OUT PACKAGE FULLY DETAILED, LEGIBLE, AS-BUILT DRAWINGS AND THE FOLLOWING IN SATISFACTION OF THE ARTICLE(S) REFERENCED HEREIN:
   - C408.3.2.1 - LIGHTING CONTROL DRAWINGS.
   - C408.3.2.2 - LIGHTING CONTROL MANUALS.
   - C408.3.2.3 - LIGHTING CONTROL REPORT.

LUMINAIRE SCHEDULE

SFC HONDO FIRE STATION

TYPE	MANUFACTURER	CATALOG NUMBER	LAMP(S), DRIVER(S), SETTING(S)					DESCRIPTION	VOLT.	LUMENS	MOUNTING	COMMENTS
			CRI	WATTS	TYPE	TEMP.	OUTPUT					
A	COLUMBIA	VSY24 40 LWHE G ED U	80	37	LED	4000K		2X4 TROFFER	UNV	4893	RECESSED	
B	COLUMBIA	VSY22 40 MWHE G ED U	80	15	LED	4000K	-	2X2 TROFFER	UNV	1950	RECESSED	
C	PRESCOLITE	LBSE 6RD 35K8 WH LBSE 6RD T	80	12.9	LED	3500K	-	6" DOWNLIGHT	UNV	1100	RECESSED	
D	COLUMBIA	TCAT24 35 XW G ED U	80	19	LED	3500K	-	2X4 INDIRECT TROFFER	UNV	2568	RECESSED	
F	RAB	DSK 8R229 FA120 WS	90	22	LED	4000K	-	CLOSET LIGHT WITH PIR	120	2000	SURFACE	
G	LITE CONTROL	4L P IAD STD 6 6 ASYM C1 40K9 1030 D050 D01 1C UNV FA1	90	36.6	LED	4000K	-	LINEAR DIRECT/INDIRECT	UNV	3000	PENDANT	
H	LITE CONTROL	4L LG D 8 8 SOF C1 40K9 D030 D01 1C UNV EF W1	90	20	LED	4000K	-	LINEAR DIRECT	UNV	2400	RECESSED	BATTERY BACK-UP, VERIFY CEILING GRID PRIOR TO ORDERING
K	BEACON	GSY 30 4K7	70	30	LED	4000K	-	PORTAL CANOPY LIGHT	UNV	4757	SURFACE	
P	ALCON LIGHTING	11249	90	30	LED	3000K	-	LINEAR PENDANT	120	1300	PENDANT	
U1	COLUMBIA	CUC1-CS-ED120	90	7	LED	3500K	-	UNDERCABINET	120	468	SURFACE	
U3	COLUMBIA	CUC3-CS-ED120	90	20	LED	3500K	-	UNDERCABINET	120	1211	SURFACE	
WEM	COMPASS	CU WZ HTR PC	-	18.47	LED	-	-	EXTERIOR EMERGENCY EGRESS	UNV	-	SURFACE	BATTERY BACK-UP
XEM	COMPASS	CC RH OSQ	-	-	LED	-	-	EMERGENCY EGRESS	UNV	-	SURFACE	BATTERY BACK-UP
X2	COMPASS	C E R G	-	-	LED	-	-	EMERGENCY EGRESS	UNV	-		BATTERY BACK-UP
EM	COMPASS	CU 2 S QSD	-	-	LED	-	-	EMERGENCY TWIN-EYE UNIT	UNV	-	SURFACE	BATTERY BACK-UP

NOTES: 1. ALL EMERGENCY BALLASTS SHALL BE FACTORY INSTALLED UNLESS SCHEDULED OTHERWISE OR PRIOR APPROVED. 08-2025
2. ALL FIXTURES SHALL CONFORM TO APPLICABLE CODES INCLUDING BUT NOT LIMITED TO NIGHT SKY ACT(S) AND ENERGY CONSERVATION STATUTES.
3. ANY SUBSTITUTIONS REQUIRE WRITTEN APPROVAL 10 DAYS PRIOR TO BID (ACUITY, CURRENT, AND COOPER INCLUDING THEIR SUBSIDARIES ARE GENERALLY ACCEPTED EQUALS).

ELECTRICAL SHEET INDEX

1. E-001 ELECTRICAL LEGEND, GEN NOTES, FIXTURE SCHEDULE, IECC CALCS
2. ED101 ELECTRICAL DEMOLITION FIRST FLOOR PLAN
3. E-101 LIGHTING PLAN
4. E-102 POWER PLAN
5. E-103 MECHANICAL EQUIPMENT CONNECTION PLAN
6. E-104 SPECIAL SYSTEMS PLAN
7. E-601 RISER DIAGRAM, SERVICE CALCS
8. E-602 PANEL SCHEDULES

STUDIO SW ARCHITECTS
2101 Mountain Road NW Suite B | Albuquerque NM 87104
505-843-9639 | www.studioswarch.com

© 2021 Studio Southwest Architects, Inc. Duplication or reproduction by any means without the express written consent of Studio Southwest Architects, Inc. is a violation of federal and international law. The information contained in this document is the intellectual property of Studio Southwest Architects, Inc. and all rights thereto are reserved.

CONSULTANTS

TESTUDO ENGINEERING
7007 Wyoming Blvd NE Suite E-1
Albuquerque, NM 87109
WWW.TESTUDOENG.COM PH:505-554-1282

Architect Engineer

FELIX A. SAUCEDA NEW MEXICO 20576 8/14/2025 PROFESSIONAL ENGINEER

SFC HONDO FIRE STATION

645 OLD LAS VEGAS HIGHWAY
SANTA FE, NM 87505

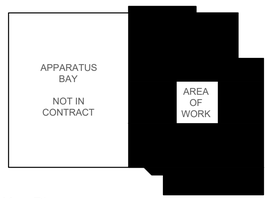

Key Plan NTS

No	Date	Description
Revision Schedule		

ISSUE:	100% CONSTRUCTION DOCUMENTS
PROJECT NUMBER:	2502
FILE:	25006_E-001.dwg
DRAWN BY:	JT
CHECKED BY:	FS
DATE:	AUGUST 14, 2025

SHEET TITLE

ELECTRICAL LEGEND, GEN NOTES, FIXTURE SCHEDULE, IECC CALCS

E-001

8/14/2025 12:12:59 PM
Z:\Projects 2025\25006 Hondo-SF Fire Station Remodel\Cadd\Drawings\25006_ED101.dwg

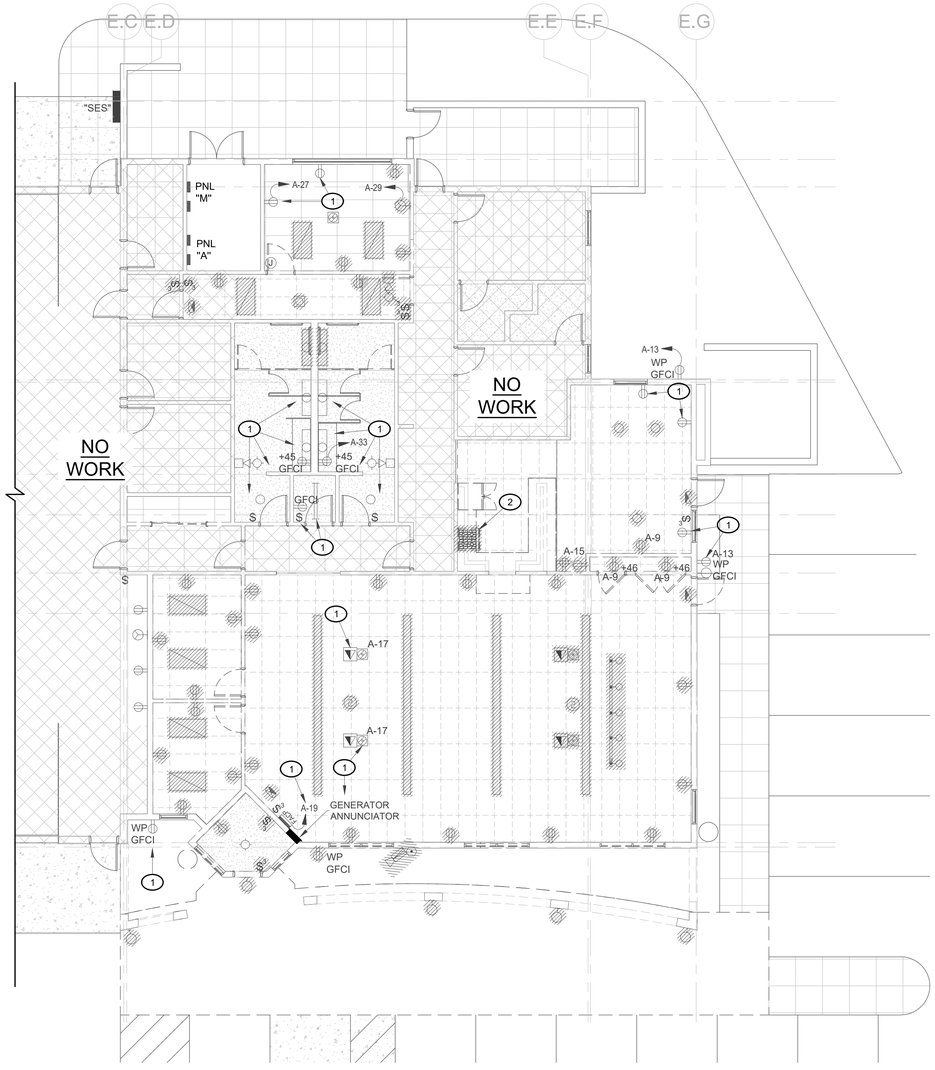

ELECTRICAL DEMOLITION PLAN

SCALE: 1/8" = 1'-0"

N

GENERAL NOTES

A. AS-BUILT CONDITIONS ARE ILLUSTRATED RESULTING FROM ENGINEER'S VISUAL OBSERVATION OF THE FACILITY OR AS-BUILT INFORMATION RECEIVED. CONTRACTOR SHALL REVIEW, INSPECT, AND TRACE OUT ALL EXISTING ELECTRICAL SYSTEMS IN ORDER TO COMPLETE A SAFE AND ORDERLY DISCONNECT/REMOVAL OF EACH SYSTEM MODIFIED UNDER THIS CONTRACT.

B. CONTRACTOR SHALL SAFE GUARD EXISTING WIRING AND DEVICES IN WALLS OR CEILINGS TO REMAIN. REFER TO ARCHITECTURAL PLAN FOR EXACT DESCRIPTION OF DEMOLITION.

C. CONTRACTOR SHALL PROPERLY DISPOSE OF, OR RECYCLE, LAMPS AND BALLASTS REMOVED BY THIS CONTRACT.

CONTRACTOR SHALL PROVIDE THE OWNER WITH A COMPLETE INVENTORY OF FIXTURES REMOVED BY THIS CONTRACT FOR THE EXPLICIT PURPOSE OF OBTAINING ANY REBATES OFFERED BY THE SERVING UTILITY COMPANY OR OTHER REBATE PROGRAM(S) IDENTIFIED BY THE OWNER.

D. REMOVE ALL EXISTING DEVICES SHOWN (LIGHT FIXTURES, RECEPTACLES, SWITCHES, FIRE ALARM, COMMUNICATION OUTLETS, JUNCTION BOXES) ON ELECTRICAL DEMOLITION PLAN UNLESS NOTED OTHERWISE.

E. REMOVE ALL CONDUIT AND WIRE TO DEVICES SHOWN TO BE REMOVED. REMOVE ALL EXPOSED OR ACCESSIBLE CONDUIT RUNS. ABANDON CONCEALED, INACCESSIBLE CONDUIT (REMOVE WIRING) IN PLACE. CONDUIT AND WIRING SHALL BE REMOVED BACK TO PANELBOARD OR NEAREST DEVICE WHICH IS TO REMAIN.

F. CONTRACTOR SHALL MAINTAIN ALL CIRCUIT AND CONDUIT CONTINUITY TO ALL EXISTING DEVICES WHICH ARE TO REMAIN. PROVIDE ALL FIELD CIRCUIT VERIFICATION AS REQUIRED TO ENSURE CONTINUITY IS MAINTAINED.

KEYED NOTES: ⬭

1. EXISTING DEVICE OR FIXTURE TO REMAIN.
2. DISCONNECT EXISTING RANGE HOOD. SALVAGE EXISTING CIRCUIT/WIRING FOR RE-USE.

WARNING:

EXISTING FIRE ALARM SHALL REMAIN AND BE MODIFIED BY A FACTORY RECOGNIZED NICET III, OR HIGHER, FIRE ALARM TECHNICIAN.

FIRE ALARM SHALL REMAIN ACTIVE AT ALL TIMES. CONTRACTOR SHALL DISABLE OR SAFE-GUARD EXISTING DEVICES TO AVOID FALSE ALARMS DURING CONSTRUCTION. IN THE EVENT THE FIRE ALARM SYSTEM MUST BE DISABLED, THE CONTRACTOR SHALL DEVELOP AND EXERCISE A MANUAL FIRE WATCH PROGRAM ACCEPTABLE TO THE OWNER AND AHJ.

ALL SMOKE DETECTORS WITHIN THE LIMITS OF CONSTRUCTION SHALL BE REPLACED WITH NEW DEVICES AT THE COMPLETION OF THE PROJECT.

WARNING:

ATTENTION:

EXISTING PANEL SCHEDULES ARE BASED UPON AS-BUILT INFORMATION RECEIVED. MINOR DEVIATIONS MAY EXIST THROUGHOUT CURRENT ACTUAL CONDITIONS.

WHENEVER BREAKER(S) ARE ADDED TO EXISTING DISTRIBUTION EQUIPMENT, NEW BREAKERS SHALL BE COMPATIBLE WITH THE EXISTING MANUFACTURER AND HAVE CHARACTERISTICS, INCLUDING AIC BRACING, EQUAL TO OR GREATER THAN EXISTING COMPONENTS.

WARNING:

IF ANY UTILITY LINES, PIPELINES, OR UNDERGROUND UTILITY LINES ARE SHOWN ON THESE DRAWINGS, THEY ARE SHOWN IN APPROXIMATE MANNER ONLY, AND SUCH LINES MAY EXIST WHERE NONE ARE SHOWN. IF ANY SUCH EXISTING LINES ARE SHOWN, THE LOCATION IS BASED UPON INFORMATION PROVIDED BY THE UTILITY OR PIPELINE COMPANY, THE OWNER OR BY OTHERS, AND THE INFORMATION MAY BE INCOMPLETE, OR MAY BE OBSOLETE BY THE TIME CONSTRUCTION COMMENCES.

THE ENGINEER HAS UNDERTAKEN NO FIELD VERIFICATION OF THE LOCATION, DEPTH, SIZE OR TYPE OF EXISTING UTILITY LINES, PIPELINES, OR UNDERGROUND UTILITY LINES, MAKES NO REPRESENTATION PERTAINING THERETO, AND ASSUMES NO RESPONSIBILITY OR LIABILITY THEREFORE. THE CONTRACTOR SHALL INFORM ITSELF TO THE LOCATION OF ANY UTILITY LINE, PIPELINE OR UNDERGROUND UTILITY LINE IN OR NEAR THE AREA OF THE WORK IN ADVANCE OF AND DURING EXCAVATION WORK. THE CONTRACTOR IS FULLY RESPONSIBLE FOR ANY AND ALL DAMAGE CAUSED BY IT'S FAILURE TO LOCATE, IDENTIFY AND PRESERVE ANY AND ALL EXISTING UTILITIES, LINES, PIPELINES, OR UNDERGROUND UTILITY LINES. THE CONTRACTOR SHALL COMPLY WITH STATE STATUTES, MUNICIPAL AND LOCAL ORDINANCES, RULES, AND REGULATIONS, IF ANY, PERTAINING TO THE LOCATION OF THESE LINES AND FACILITIES IN PLANNING AND CONDUCTING EXCAVATION, WHETHER BY CALLING OR NOTIFYING THE UTILITIES, COMPLYING WITH "NM ONE CALL" PROCEDURES, OR OTHERWISE.

STUDIO SW ARCHITECTS
2101 Mountain Road NW Suite B | Albuquerque NM 87104
505-843-9639 | www.studioswarch.com

© 2021 Studio Southwest Architects, Inc. Duplication or reproduction by any means without the express written consent of Studio Southwest Architects, Inc. is a violation of federal and international law. The information contained in this document is the intellectual property of Studio Southwest Architects, Inc. and all rights thereto are reserved.

CONSULTANTS

TESTUDO ENGINEERING
7007 Wyoming Blvd NE Suite E-1
Albuquerque, NM 87109
WWW.TESTUDOENG.COM PH:505-554-1282

Architect Engineer

FELIX A. SAUCEDA NEW MEXICO 20576 8/14/2025 PROFESSIONAL ENGINEER

SFC HONDO FIRE STATION

645 OLD LAS VEGAS HIGHWAY
SANTA FE, NM 87505

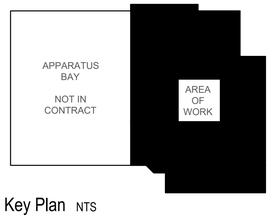

Key Plan NTS

No	Date	Description
Revision Schedule		

ISSUE:	100% CONSTRUCTION DOCUMENTS
PROJECT NUMBER:	2502
FILE:	25006_ED101.dwg
DRAWN BY:	JT
CHECKED BY:	FS
DATE:	AUGUST 14, 2025

SHEET TITLE

ELECTRICAL DEMOLITION PLAN

ED101

8/14/2025 12:13:04 PM

Z:\Projects 2025\25006 Hondo-SF Fire Station Remodel\Cadd\Drawings\25006_E-101.dwg

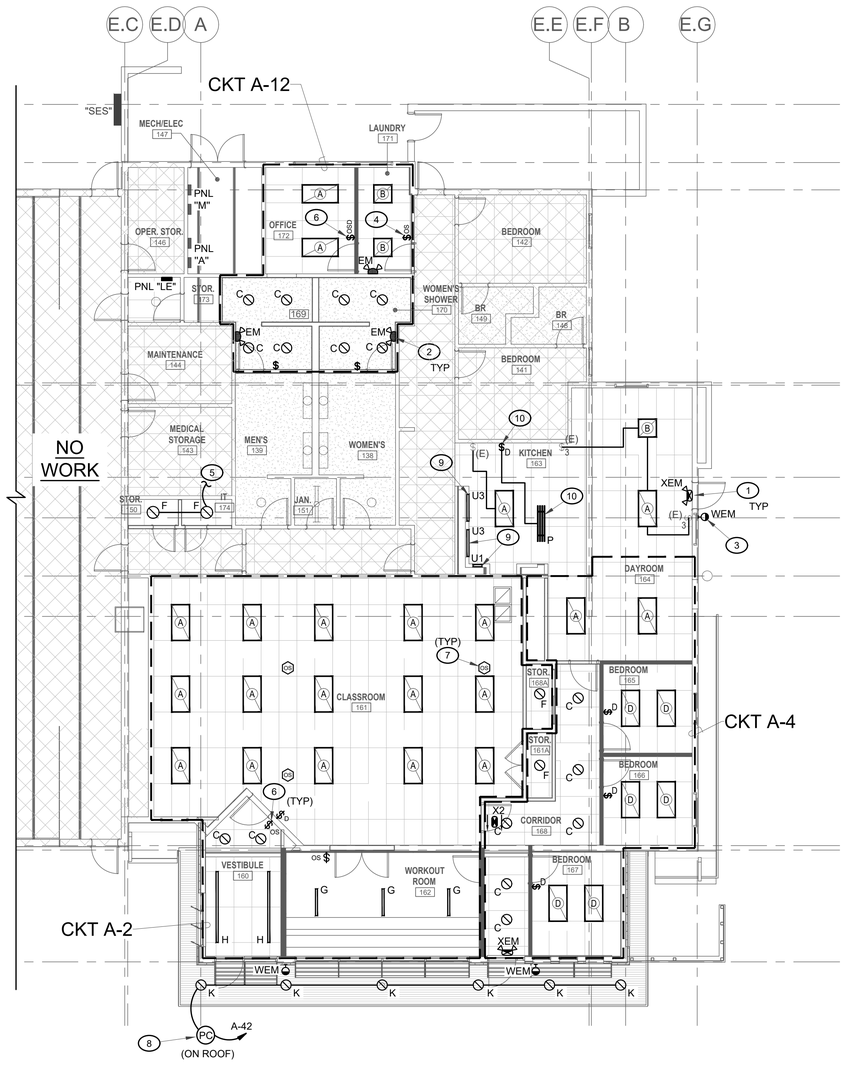

LIGHTING PLAN

SCALE: 1/8" = 1'-0"

KEYED NOTES:

1. COMBO EXIT SIGN / EMERGENCY TWIN-EYE UNIT, TYPE "XEM" OR TYPE "X2", WITH EMERGENCY BATTERY PACK. REFER TO LUMINAIRE SCHEDULE. CONNECT TO UNSWITCHED (120V OR 277V) LIGHTING CIRCUIT SERVING THIS ROOM.
2. EMERGENCY TWIN-EYE EGRESS LIGHTING UNIT, TYPE "EM", WITH EMERGENCY BATTERY PACK. REFER TO LUMINAIRE SCHEDULE. CONNECT TO UNSWITCHED (120V OR 277V) LIGHTING CIRCUIT SERVING THIS ROOM.
3. EXTERIOR EMERGENCY EGRESS LIGHTING UNIT, TYPE "WEM", WITH EMERGENCY BATTERY PACK. REFER TO LUMINAIRE SCHEDULE. CONNECT TO UNSWITCHED (120V OR 277V) LIGHTING CIRCUIT SERVING ADJACENT INTERIOR ROOM.
4. WALL MOUNT OCCUPANCY SENSOR, WATT-STOPPER #DW-100 OR EQUAL. SENSOR SHALL AUTOMATICALLY TURN OFF LIGHTING WITHIN 20 MINUTES WITHOUT OCCUPANCY.
5. CONNECT NEW FIXTURE TO NEAREST ADJACENT EXISTING CIRCUIT.
6. DUAL-TECHNOLOGY OCCUPANCY DIMMER SWITCH, WATT-STOPPER #DW-311-WH. SENSOR SHALL AUTOMATICALLY TURN OFF LIGHTS WITHIN 20 MINUTES WITHOUT OCCUPANCY.
7. CEILING MOUNTED 360-DEGREE OCCUPANCY SENSOR SYNCHRONIZED PER ZONE (DO NOT INSTALL WITHIN 5'-0" OF ANY SUPPLY OR RETURN HVAC REGISTER). DEVICE(S) SHALL EXTINGUISH LIGHT FIXTURES IN ASSOCIATED CONTROLLED ZONE WITHIN 20 MINUTES WITHOUT OCCUPANCY.
8. 120 VOLT PHOTO CELL LOCATED ON ROOF FACING NORTH. TORK #2101, OR EQUAL.
9. UNDERCABINET FIXTURE CONNECTED TO EXISTING ADJACENT 120-VOLT CIRCUIT. VERIFY EXACT LENGTH(S) PRIOR TO ORDERING AND ROUGH-IN. REFER TO ARCHITECTURAL FOR EXACT PLACEMENT.
10. NEW 4'-0" LINEAR DECORATIVE PENDANT AND COMPATIBLE DIMMER SWITCH. CONNECT TO EXISTING LIGHTING CIRCUIT SERVING THIS AREA.

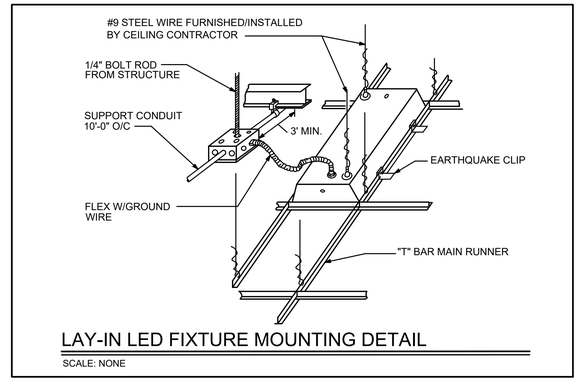

LAY-IN LED FIXTURE MOUNTING DETAIL

SCALE: NONE

STUDIO SW ARCHITECTS
2101 Mountain Road NW Suite B | Albuquerque NM 87104
505-843-9639 | www.studioswarch.com

© 2021 Studio Southwest Architects, Inc. Duplication or reproduction by any means without the express written consent of Studio Southwest Architects, Inc. is a violation of federal and international law. The information contained in this document is the intellectual property of Studio Southwest Architects, Inc. and all rights thereto are reserved.

CONSULTANTS

TESTUDO ENGINEERING
7007 Wyoming Blvd NE Suite E-1
Albuquerque, NM 87109
WWW.TESTUDOENG.COM PH:505-554-1282

Architect Engineer

FELIX A. SAUCEDA NEW MEXICO 20576 8/14/2025 PROFESSIONAL ENGINEER

SFC HONDO FIRE STATION

645 OLD LAS VEGAS HIGHWAY
SANTA FE, NM 87505

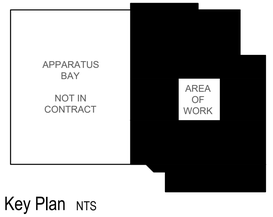

Key Plan NTS

No	Date	Description
Revision Schedule		

ISSUE:	100% CONSTRUCTION DOCUMENTS
PROJECT NUMBER:	2502
FILE:	25006_E-101.dwg
DRAWN BY:	JT
CHECKED BY:	FS
DATE:	AUGUST 14, 2025

SHEET TITLE

LIGHTING PLAN

E-101

8/14/2025 12:13:07 PM

Z:\Projects 2025\25006 Hondo-SF Fire Station Remodel\Cadd\Drawings\25006_E-102.dwg

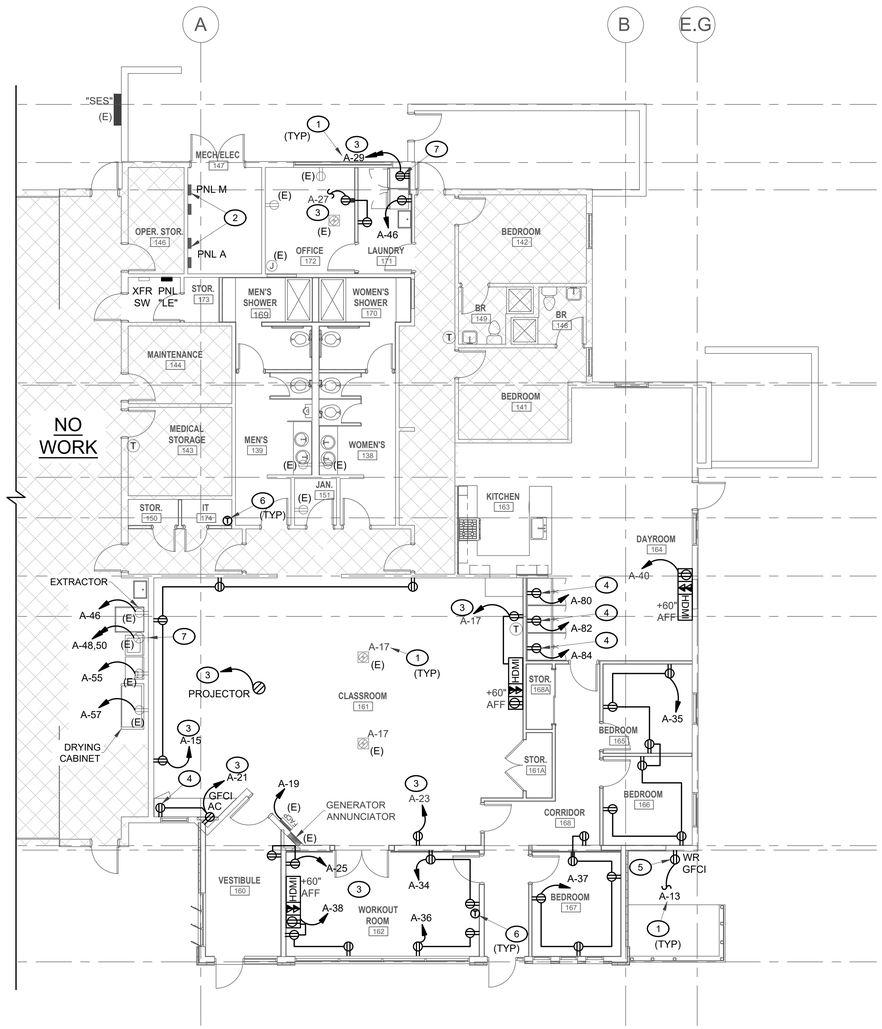

POWER PLAN

SCALE: 1/8" = 1'-0"

N

KEYED NOTES:

1. NUMBER ADJACENT TO RECEPTACLE INDICATES CIRCUIT NUMBER. SIZE CONDUCTORS ACCORDING TO CORRESPONDING BREAKER RATING AND MAKE ALL FINAL POWER CONNECTIONS.
2. EXISTING ELECTRICAL PANEL(S). SHOWN FOR REFERENCE.
3. CONNECT TO EXISTING CIRCUIT SERVING THIS AREA. EXISTING 20-AMP CIRCUITS MAY BE UTILIZED UP TO 1,440-WATTS.

   UPDATE PANEL SCHEDULE(S) AND LABEL NEW DEVICES WITH THE CIRCUIT DESIGNATION THEY ARE CONNECTED TO.
4. RECEPTACLE LOCATED BEHIND APPLIANCE. VERIFY EXACT LOCATION PRIOR TO ROUGH-IN (ADJUST AS NECESSARY IF EXISTING). CONNECT TO GFCI BREAKER RATED FOR PERSONNEL PROTECTION IN COMPLIANCE WITH NEC 422.5(A) AND (B).
5. EXTERIOR WEATHER-RESISTANT (WR), GFCI-TYPE DUPLEX RECEPTACLE. REFER TO ELECTRICAL SYMBOL LEGEND. CONNECT TO EXISTING CIRCUIT INDICATED.
6. 0.75" BUSHED CONDUIT STUBBED INTO ACCESSIBLE CEILING SPACE FOR T-STAT CONTROL WIRING INSTALLED BY MECHANICAL.
7. 30-AMP, 208-VOLT, 1-PHASE RECEPTACLE COMPATIBLE WITH APPLIANCE SERVED.

   ELECTRICAL CONTRACTOR TO FURNISH UTILITY WHIP.CORD IF NOT PROVIDED WITH APPLIANCE.

STUDIO SW ARCHITECTS
2101 Mountain Road NW Suite B | Albuquerque NM 87104
505-843-9639 | www.studioswarch.com

© 2021 Studio Southwest Architects, Inc. Duplication or reproduction by any means without the express written consent of Studio Southwest Architects, Inc. is a violation of federal and international law. The information contained in this document is the intellectual property of Studio Southwest Architects, Inc. and all rights thereto are reserved.

CONSULTANTS

TESTUDO ENGINEERING
7007 Wyoming Blvd NE Suite E-1
Albuquerque, NM 87109
WWW.TESTUDOENG.COM PH:505-554-1282

Architect Engineer

FELIX A. SAUCEDA
NEW MEXICO
20576
8/14/2025
PROFESSIONAL ENGINEER

SFC HONDO FIRE STATION

645 OLD LAS VEGAS HIGHWAY
SANTA FE, NM 87505

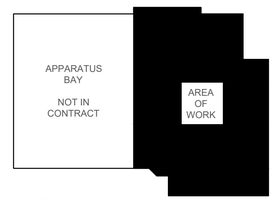

Key Plan NTS

No	Date	Description
		Revision Schedule

ISSUE:	100% CONSTRUCTION DOCUMENTS
PROJECT NUMBER:	2502
FILE:	25006_E-102.dwg
DRAWN BY:	JT
CHECKED BY:	FS
DATE:	AUGUST 14, 2025

SHEET TITLE

POWER PLAN

E-102

8/14/2025 12:13:11 PM

Z:\Projects 2025\25006 Hondo-SF Fire Station Remodel\Cad\Drawings\25006_E-103.dwg

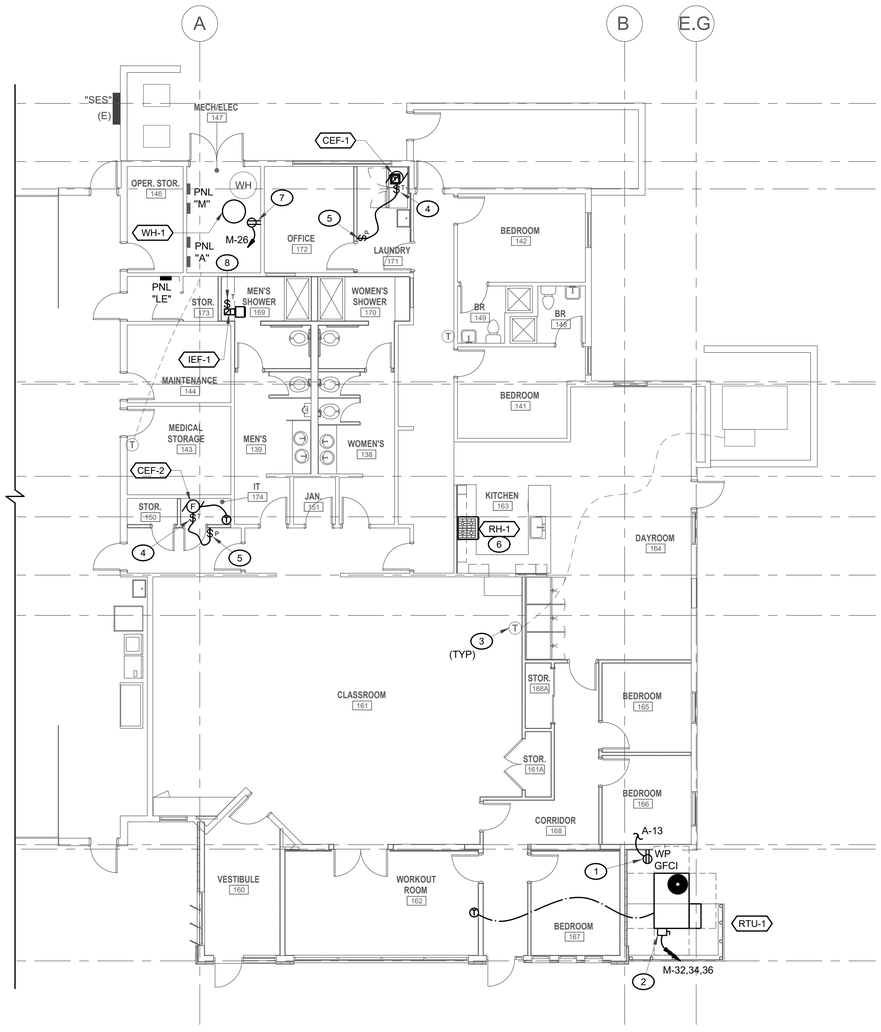

MECHANICAL EQUIPMENT CONNECTION PLAN

SCALE: 1/8" = 1'-0"

N

KEYED NOTES

1. WEATHER RESISTANT GFCI RECEPTACLE MOUNTED ON, OR ADJACENT TO, MECHANICAL UNIT INSTALLED IN A MANNER THAT DOES NOT IMPEDE ACCESS REQUIRED FOR ROUTINE MECHANICAL MAINTENANCE. COMPLY WITH NEC 210.63(A).
2. 30-AMP, 250-VOLT, 3-PHASE, FSS, DISCONNECT IN NEMA-3R ENCLOSURE MOUNTED ON, OR ADJACENT TO, MECHANICAL UNIT IN A MANNER THAT DOES NOT IMPEDE ACCESS REQUIRED FOR ROUTINE MECHANICAL MAINTENANCE. EXTEND .75" CONDUIT WITH (3) #10 CU AND (1) #10 CU EGR TO CIRCUIT INDICATED AND PROVIDE FUSES IN ACCORDANCE WITH MANUFACTURER'S NAMEPLATE.
3. .75" BUSHED CONDUIT STUBBED INTO ACCESSIBLE CEILING SPACE FOR T-STAT CONTROL WIRING INSTALLED BY MECHANICAL.
4. SINGLE POLE 20-AMP THERMAL SWITCH INSTALLED ON, OR ADJACENT TO, EXHAUST FAN.
5. SINGLE POLE PILOT SWITCH SERVING EXHAUST FAN. CONNECT TO LIGHTING CIRCUIT SERVING THIS ROOM. PILOT LIGHT SHALL ILLUMINATE WHEN FAN IS RUNNING. PROVIDE LABEL INDICATING EQUIPMENT SERVED.
6. NEW 30" RANGE HOOD. CONNECT TO EXISTING CIRCUIT. ADJUST RECEPTACLE/CONNECTION POINT AS NEEDED FOR NEW EQUIPMENT.
7. DEDICATED GFCI RECEPTACLE SERVING NEW GAS FIRED WATER HEATER. COORDINATE EXACT LOCATION PRIOR TO ROUGH-IN.
8. CONNECT TO EXISTING CIRCUIT SERVING THIS AREA. EXISTING 20-AMP CIRCUITS MAY BE UTILIZED UP TO 1,440-WATTS.

   UPDATE PANEL SCHEDULE(S) AND LABEL NEW DEVICES WITH THE CIRCUIT DESIGNATION THEY ARE CONNECTED TO.

MECHANICAL EQUIPMENT CONNECTION SCHEDULE

ITEM	DESCRIPTION	LOAD Volts	Phase	HP	KVA	MCA	MOCP	Termination	Notes
CEF-1,2	EXHUAST FAN	115	1			1.4	20.0		4
IEF-1	EXHAUST FAN	115	1			3.0	20.0		4
RTU-1	AIR CONDITIONER	208	3			21.0	25.0		2,3
RH-1	RANGE HOOD	120	1			1.0	20.0	NEMA 5-20	
WH-1	WATER HEATER	120	1			5.0	20.0	NEMA 5-20	3

NOTES: **(Verify all equipment voltages and amp ratings with mechanical contractor prior to rough-in.)** 08-2025

1. NEMA 3R fused disconnect switch or breaker provided with unit. Refer to Mechanical Equipment Schedule.
2. Provide fused disconnect switch, NEMA 3R if outside.
3. Provide 120V GFCI duplex receptacle adjacent to unit; NEMA 3R if outside. Comply with NEC 210.63
4. Provide thermal switch.
5. Provide NEMA 3R combination starter / disconnect switch. Provide OCP per approved mechanical equipment.

STUDIO SW ARCHITECTS
2101 Mountain Road NW Suite B | Albuquerque NM 87104
505-843-9639 | www.studioswarch.com

© 2021 Studio Southwest Architects, Inc. Duplication or reproduction by any means without the express written consent of Studio Southwest Architects, Inc. is a violation of federal and international law. The information contained in this document is the intellectual property of Studio Southwest Architects, Inc. and all rights thereto are reserved.

CONSULTANTS

TESTUDO ENGINEERING
7007 Wyoming Blvd NE Suite E-1
Albuquerque, NM 87109
WWW.TESTUDOENG.COM PH:505-554-1282

Architect Engineer

FELIX A. SAUCEDA NEW MEXICO 20576 8/14/2025 PROFESSIONAL ENGINEER

SFC HONDO FIRE STATION

645 OLD LAS VEGAS HIGHWAY
SANTA FE, NM 87505

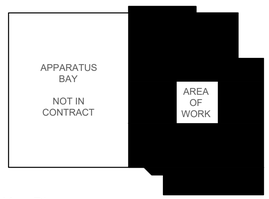

Key Plan NTS

No	Date	Description
Revision Schedule		

ISSUE:	100% CONSTRUCTION DOCUMENTS
PROJECT NUMBER:	2502
FILE:	25006_E-103.dwg
DRAWN BY:	JT
CHECKED BY:	FS
DATE:	AUGUST 14, 2025

SHEET TITLE

MECHANICAL EQUIPMENT CONNECTION PLAN

E-103

8/14/2025 12:13:15 PM
Z:\Projects 2025\25006 Hondo-SF Fire Station Remodel\Cadd\Drawings\25006_E-104.dwg

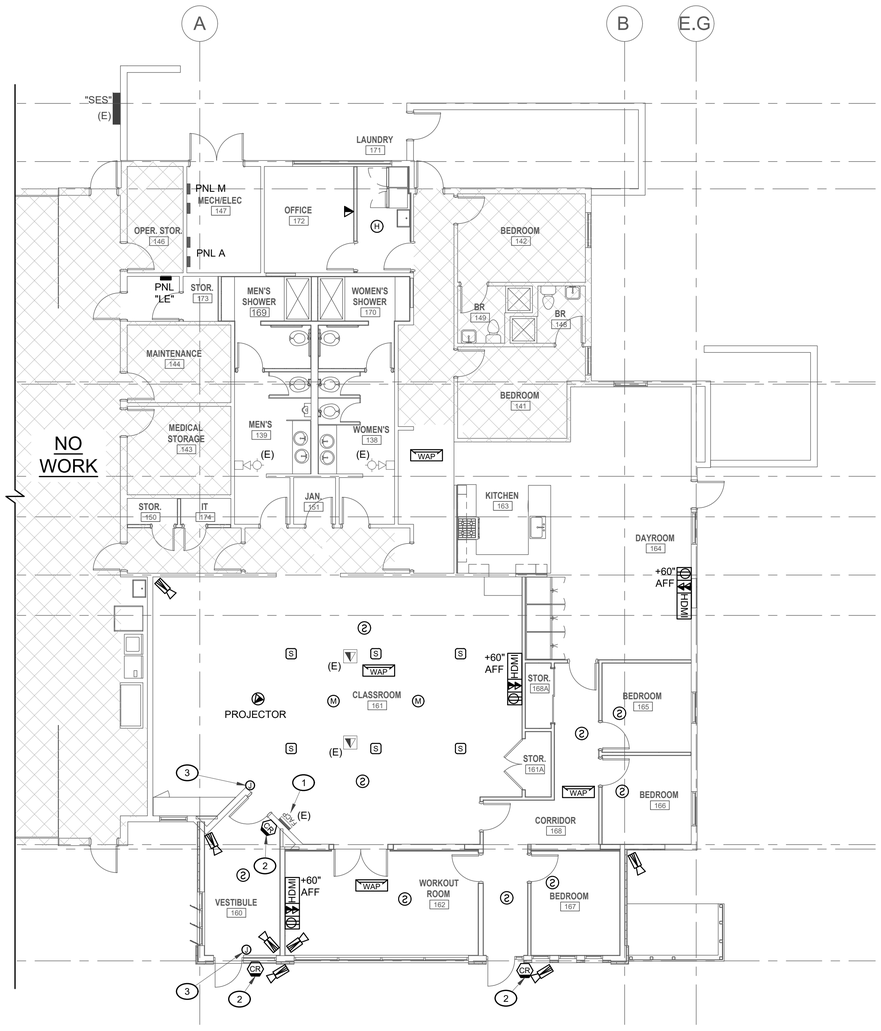

SPECIAL SYSTEMS PLAN

SCALE: 1/8" = 1'-0"

N

KEYED NOTES:

A. COORDINATE POWER AND/OR FIRE ALARM DOOR CONNECTIONS WITH ARCHITECT'S DOOR HARDWARE THROUGH-OUT AREA(S) OF WORK.

ALL CONNECTIONS SHALL COMPLY WITH APPLICABLE CODE(S) AND MANUFACTURER'S INSTALLATION INSTRUCTIONS.

KEYED NOTES:

1. FIRE ALARM CONTROL PANEL (FACP), NOTIFIER AFP-100.
2. VERIFY CARD READER LOCATION WITH OWNER PRIOR TO ROUGH-IN.
3. POWERED DOOR OPERATOR (ADA DOOR). PROVIDE ALL POWER AND CONTROL CONNECTIONS AS REQUIRED PER MANUFACTURER'S RECOMMENDATIONS FOR A COMPLETELY OPERATIONAL SYSTEM.

   UPDATE PANEL SCHEDULE(S) AND LABEL NEW DEVICES WITH THE CIRCUIT DESIGNATION THEY ARE CONNECTED TO.

WARNING:

EXISTING FIRE ALARM SHALL REMAIN AND BE MODIFIED BY A FACTORY RECOGNIZED NICET III, OR HIGHER, FIRE ALARM TECHNICIAN.

FIRE ALARM SHALL REMAIN ACTIVE AT ALL TIMES. CONTRACTOR SHALL DISABLE OR SAFE-GUARD EXISTING DEVICES TO AVOID FALSE ALARMS DURING CONSTRUCTION. IN THE EVENT THE FIRE ALARM SYSTEM MUST BE DISABLED, THE CONTRACTOR SHALL DEVELOP AND EXERCISE A MANUAL FIRE WATCH PROGRAM ACCEPTABLE TO THE OWNER AND AHJ.

ALL SMOKE DETECTORS WITHIN THE LIMITS OF CONSTRUCTION SHALL BE REPLACED WITH NEW DEVICES AT THE COMPLETION OF THE PROJECT.

SPECIAL SYSTEMS RESPONSIBILITY MATRIX

PROJECT NAME: SFC HONDO FIRE STATION
OWNER: SANTA FE COUNTY
TEI JOB NUMBER: 25008

SPEC. SEC.	ITEM-DESCRIPTION	Furnished By: OWNER	Furnished By: CONTRACTOR	Installed By: OWNER	Installed By: CONTRACTOR	COMMENTS
	CONDUIT PATHWAYS/STUB-UPS		X		X	ALL CONDUITS SHALL BE BUSHED
	STRUCTURED CABLING		X		X	CAT-6 MATCH EXISTING SYSTEM(S) COLOR(S)
	AUDIO/VISUAL CABLING	X		X		
	SECURITY CABLING		X		X	CAT-6 MATCH EXISTING SYSTEM(S) COLOR(S)
	CCTV CABLING		X		X	CAT-6 MATCH EXISTING SYSTEM(S) COLOR(S)
	ACTIVE ELECTRONICS	-	-	-	-	
	TELE/DATA/WAPS	X		X		
	AUDIO/VISUAL	X		X		
	SECURITY COMPONENTS		X		X	
	CCTV COMPONENTS		X		X	
	LICENSES, SOFTWARE, FIREWALLS	X		X		
	FIRE ALARM		X		X	TARGET SAFE SECURITY SYSTEMS 505-438-8129
	POTS PHONE LINE(S)					EXISTING
	MONITORING	X				EXISTING - TARGET SAFE SECURITY SYSTEMS 505-438-8129

NOTES:

1. **All equipment shall be properly U.L. labeled and in compliance with the latest IEEE/ ANSI standards.**
2. **All equipment shall be installed in strict adherence with the manufacturers instructions.**
3. **Contractor shall complete commissioning and ad provide 8 hours of training for each system; Owner shall have in attendance all persons responsible for the operation and maintenance of the facility.**
4. **All training shall be video-taped and provided to the Owner in digital format for future use.**

STUDIO SW ARCHITECTS
2101 Mountain Road NW Suite B | Albuquerque NM 87104
505-843-9639 | www.studioswarch.com

© 2021 Studio Southwest Architects, Inc. Duplication or reproduction by any means without the express written consent of Studio Southwest Architects, Inc. is a violation of federal and international law. The information contained in this document is the intellectual property of Studio Southwest Architects, Inc. and all rights thereto are reserved.

CONSULTANTS

TESTUDO ENGINEERING
7007 Wyoming Blvd NE Suite E-1
Albuquerque, NM 87109
WWW.TESTUDOENG.COM PH:505-554-1282

Architect Engineer

FELIX A. SAUCEDA
NEW MEXICO
20576
8/14/2025
PROFESSIONAL ENGINEER

SFC HONDO FIRE STATION

645 OLD LAS VEGAS HIGHWAY
SANTA FE, NM 87505

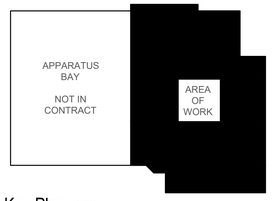

Key Plan NTS

No	Date	Description
Revision Schedule		

ISSUE:	100% CONSTRUCTION DOCUMENTS
PROJECT NUMBER:	2502
FILE:	25006_E-104.dwg
DRAWN BY:	JT
CHECKED BY:	FS
DATE:	AUGUST 14, 2025

SHEET TITLE

SPECIAL SYSTEMS PLAN

E-104

8/14/2025 12:13:18 PM

Z:\Projects 2025\25006 Hondo-SF Fire Station Remodel\Cadd\Drawings\25006_E-601.dwg

SERVICE GROUNDING SYSTEM GENERAL NOTES

A. ALL CONDUCTORS USED FOR THE GROUNDING SYSTEM SHALL BE COPPER.

B. CONNECT THE GROUNDING SYSTEM TO THE FOUR FOLLOWING COMPONENTS IF AVAILABLE:
   1. BUILDING STEEL.
   2. METAL U.G. COLD WATER PIPE.
   3. CONCRETE ENCASED REBAR OR #4 COPPER UFER.
   4. 10' GROUND RODS.

C. ANY SPLICING SHALL BE VIA IRREVERSIBLE COMPRESSION TYPE.

D. THE GROUNDING SYSTEM SHALL COMPLY WITH ALL REQUIREMENTS OF ARTICLE 250 NEC, AND SHALL PROVIDE 5 OHMS OR LESS RESISTANCE TO GROUND. PROVIDE TEST REPORT VERIFYING RESISTANCE LEVEL IS IN COMPLIANCE WITH 5 OHM MAXIMUM.

GROUNDING ELECTRODE CONDUCTOR SCHEDULE

SERVICE AMPACITY	EQUIV. CU WIRE SIZE	MAIN BONDING JUMPER	EQUIPMENT BONDING JUMPER	METALLIC PIPE CONDUCTOR	BUILDING STEEL CONDUCTOR	REBAR OR UFER CONDUCTOR	GROUND ROD CONDUCTOR
100A	#2	#8	#8	#8	#8	#8	#8
150A	#1/0	#6	#6	#6	#6	#6	#6
200A	#3/0	#4	#4	#4	#4	#4	#6
225A	#4/0	#2	#2	#2	#2	#4	#6
400A	#600	#1/0	#1/0	#1/0	#1/0	#4	#6
600A	(2) X 350	#2/0	#2/0	#2/0	#2/0	#4	#6
800A	(2) X 600	#3/0	#3/0	#2/0	#2/0	#4	#6

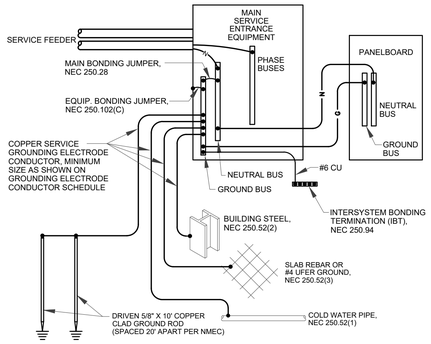

SERVICE GROUNDING SYSTEM DIAGRAM

SCALE: NONE

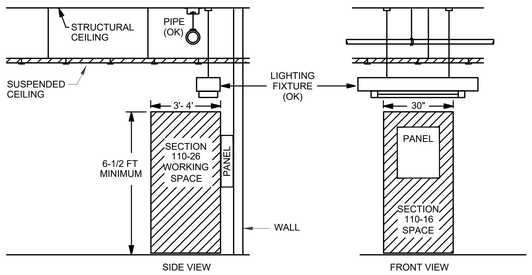

NOTE: COORDINATE EQUIPMENT INSTALLATION IN FIELD TO ENSURE ALL N.E.C. CLEARANCES ARE MAINTAINED

POWER PANEL CLEARANCE DIAGRAM

SCALE: NONE

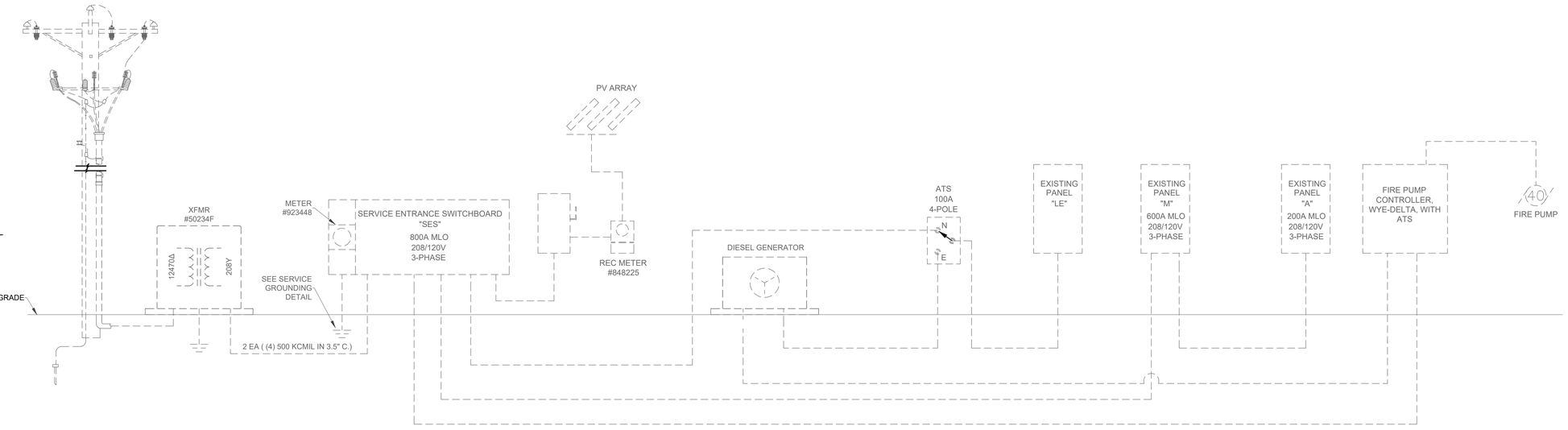

POWER RISER DIAGRAM - EXISTING

SCALE: N.T.S.

STUDIO SW ARCHITECTS
2101 Mountain Road NW Suite B | Albuquerque NM 87104
505-843-9639 | www.studioswarch.com

© 2021 Studio Southwest Architects, Inc. Duplication or reproduction by any means without the express written consent of Studio Southwest Architects, Inc. is a violation of federal and international law. The information contained in this document is the intellectual property of Studio Southwest Architects, Inc. and all rights thereto are reserved.

CONSULTANTS

TESTUDO ENGINEERING
7007 Wyoming Blvd NE Suite E-1
Albuquerque, NM 87109
WWW.TESTUDOENG.COM PH:505-554-1282

Architect Engineer

FELIX A. SAUCEDA NEW MEXICO 20576 8/14/2025 PROFESSIONAL ENGINEER

SFC HONDO FIRE STATION

645 OLD LAS VEGAS HIGHWAY
SANTA FE, NM 87505

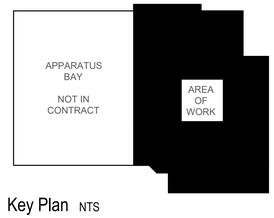

Key Plan NTS

No	Date	Description
Revision Schedule		

ISSUE:	100% CONSTRUCTION DOCUMENTS
PROJECT NUMBER:	2502
FILE:	25006_E-601.dwg
DRAWN BY:	JT
CHECKED BY:	FS
DATE:	AUGUST 14, 2025

SHEET TITLE

RISER DIAGRAM, SERVICE CALCS

E-601

8/14/2025 12:13:18 PM

Z:\Projects 2025\2506 Hondo-SF Fire Station Remodel\Cad\Drawings\25006_E-602.dwg

PANEL: "A" (EXISTING) | **VOLTAGE:** 208/120V | **MAINS:** 200A MLO | **WIRING:** 3 PHASE, 4-W
LOCATION: ELECTRICAL ROOM | **MOUNTING:** SURFACE | **DEVICE FAMILY:** BOLT-ON | **ENCLOSURE:** NEMA 1 / 3R
FED FROM: PANEL "M" | **FEED:** BOTTOM | **O.C. DEVICE:** CIRCUIT BREAKER | **AIC:** 65,000

BKR SIZE	NOTES	DESCRIPTION	CODE	LOAD (VA)	CKT NO.	PHASE A	PHASE B	PHASE C	CKT NO.	LOAD (VA)	CODE	DESCRIPTION	NOTES	BKR SIZE
20A-1P		RECEPTACLES		1080	1	2690			2	1610		LIGHTING		20A-1P
20A-1P		RECEPTACLES		360	3		660		4	300		LIGHTING		20A-1P
20A-1P		RECEPTACLES		720	5			1342	6	622		LIGHTING		20A-1P
20A-1P		RECEPTACLES		1080	7	1464			8	384		LIGHTING		20A-1P
20A-1P		RECEPTACLES		1260	9		2487		10	1227		LIGHTING		20A-1P
20A-1P		RECEPTACLES		360	11			1690	12	1330		LIGHTING		20A-1P
20A-1P		RECEPTACLES		360	13	1215			14	855		LIGHTING		20A-1P
20A-1P		RECEPTACLES		360	15		1946		16	1586		LIGHTING		20A-1P
20A-1P		RECEPTACLES		1260	17			2846	18	1586		LIGHTING		20A-1P
20A-1P		FIRE ALARM CONTROL PANEL		200	19	1736			20	1536		LIGHTING		20A-1P
20A-1P		RECEPTACLES		720	21		2306		22	1586		LIGHTING		20A-1P
20A-1P		**CLASSROOM 161**		1260	23			1932	24	672		LIGHTING, OUTDOOR		20A-1P
20A-1P		**VEST. 160, WORKOUT RM 162**		1080	25	1752			26	672		LIGHTING, OUTDOOR		20A-1P
20A-1P		SPARE		1080	27		1620		28	540		LIGHTING, OUTDOOR		20A-1P
20A-2P		EXERCISE EQP		1200	29			1404	30	204		LIGHTING OUTDOOR FLAG POLE		20A-1P
				1200	31	1332			32	132		LIGHTING OUTDOOR SIGN		20A-1P
20A-1P		RECEPTACLES		540	33		900		34	**360**		**WORK OUT RM 162**		**20A-1P**
20A-1P		**BEDROOM 165,166**		**1080**	35			1440	36	**360**		**WORK OUT RM 162**		**20A-1P**
20A-1P		**BEDROOM 167**		**900**	37	1860			38	**960**		**WORK OUT RM 162**		**20A-1P**
		SPACE			39		600		40	**600**		**DAYROOM RM 164 TV**		**20A-1P**
		SPACE			41				42			**PORTAL LTG, OUTDOOR**		**20A-1P**
	KVA	**AMPS**		**PHASE TOTALS:**		**VA**		**AMPS**	**NOTES:**					
SECT. 1	**33.2**	**92.3**		**PHASE A:**		**12049**		**100.4**	**1.) SECTION 1 OF 2-SECTION PANEL.**					
				PHASE B:		**10519**		**87.7**	**2.) NEUTRAL BAR, GROUND BAR.**					
				PHASE C:		**10654**		**88.8**	**3.) BREAKER CHARACTERISTICS SHALL MATCH LOAD(S) SERVED.**					

SECTION 2

20A-1P		RECEPTACLES		540	43	540			44			SPARE		20A-1P
20A-1P		RECEPTACLES		360	45		1560		46	1200		WASHER		20A-1P
20A-1P		RECEPTACLES		1260	47			3760	48	2500		DRYER		30A-2P
20A-1P		RECEPTACLES		720	49	3220			50	2500				
20A-1P		RECEPTACLES		1800	51		2340		52	540		RECEPTACLE		20A-1P
20A-1P		RECEPTACLES		720	53			1620	54	900		RECEPTACLE		20A-1P
20A-1P		RECEPTACLES		180	55	1260			56	1080		RECEPTACLE		20A-1P
20A-1P		RECEPTACLES		180	57		900		58	720		RECEPTACLE		20A-1P
20A-1P		SPARE			59				60			SPARE		20A-1P
20A-1P		RECEPTACLES		360	61	360			62			SPARE		20A-1P
20A-1P		DISHWASHER DISPOSAL		1200	63		1200		64			SPARE		20A-1P
20A-1P		SPARE			65				66			SPARE		20A-1P
20A-1P		KITCHEN REFRIGERATOR		560	67	560			68			SPACE		
20A-1P		KITCHEN RECEPTACLE		1500	69		1500		70			SPACE		
20A-1P		KITCHEN RECEPTACLE		1500	71			1500	72			SPACE		
20A-1P		KITCHEN RECEPTACLE		180	73	180			74			SPACE		
20A-1P		KITCHEN RECEPTACLE		180	75		180		76			SPACE		
20A-1P		SPARE			77				78			SPACE		
		SPACE			79	600			80	**600**		**VENDING EQP - NEW**		**20A-1P**
		SPACE			81		600		82	**600**		**VENDING EQP - NEW**		**20A-1P**
		SPACE			83			600	84	**600**		**VENDING EQP - NEW**		**20A-1P**
	KVA	**AMPS**		**PHASE TOTALS:**		**VA**		**AMPS**	**NOTES:**				08-2025	
SECT. 1	**33.2**	**92.3**		**PHASE A:**		**6720**		**56.0**	**1.) SECTION 2 OF 2-SECTION PANEL.**					
SECT. 2	**22.5**	**62.4**		**PHASE B:**		**8280**		**69.0**	**2.) NEUTRAL BAR, GROUND BAR.**					
TOTAL	**55.7**	**154.7**		**PHASE C:**		**7480**		**62.3**	**3.) BREAKER CHARACTERISTICS SHALL MATCH LOAD(S) SERVED.**					

PANEL: "M" (EXISTING) | **VOLTAGE:** 208/120V | **MAINS:** 600A MLO | **WIRING:** 3 PHASE, 4-W
LOCATION: ELECTRICAL ROOM | **MOUNTING:** SURFACE | **DEVICE FAMILY:** BOLT-ON | **ENCLOSURE:** NEMA 1 / 3R
FED FROM: PANEL "SES" | **FEED:** BOTTOM, *FEED THRU LUGS* | **O.C. DEVICE:** CIRCUIT BREAKER | **AIC:** 65,000

BKR SIZE	NOTES	DESCRIPTION	CODE	LOAD (VA)	CKT NO.	PHASE A	PHASE B	PHASE C	CKT NO.	LOAD (VA)	CODE	DESCRIPTION	NOTES	BKR SIZE
				3720	1	5376			2	1656		FURNACE 1		20A-1P
40A-3P		A/C UNIT 3		3720	3		5376		4	1656		FURNACE 2		20A-1P
				3720	5			6264	6	2544		CONDENSING UNIT 1		40A-2P
				3720	7	6264			8	2544				
40A-3P		A/C UNIT 3		3720	9		7308		10	3588		CONDENSING UNIT 2		45A-2P
				3720	11			7308	12	3588				
				4464	13	6864			14	2400		WELDING OUTLET		50A-2P
50A-3P		A/C UNIT 4		4464	15		6864		16	2400				
				4464	17			6864	18	2400		WELDING OUTLET		50A-2P
20A-1P		EXH FAN 5, 1/4HP		696	19	3096			20	2400				
20A-1P		EXH FAN 7,8,9		782	21		3182		22	2400		WELDING OUTLET		50A-2P
20A-1P		SPARE			23			2400	24	2400				
20A-1P		SPARE			25	600			26	**600**		**WH-1 (NEW)**		20A-1P
20A-1P		SPARE			27			540	28			SPARE		20A-1P
20A-1P		SPARE			29				30			SPARE		20A-1P
20A-1P		GENERATOR BATTERY CHARGER		200	31	2720			32	**2520**		**RTU-1 (NEW)**		**25A-3P**
20A-2P		GENERATOR ENGINE BLOCK HEATER		500	33		3020		34	**2520**				
				500	35			3020	36	**2520**				
20A-1P		DOOR OPERATOR		1176	37	2832			38	1656		AIR VAC 3/4 HP		20A-1P
20A-1P		DOOR OPERATOR		1176	39		2832		40	1656		AIR VAC 3/4 HP		20A-1P
20A-1P		DOOR OPERATOR		1176	41			2832	42	1656		AIR VAC 3/4 HP		20A-1P
	KVA	**AMPS**		**PHASE TOTALS:**		**VA**		**AMPS**	**NOTES:**					
SECT. 1	**85.0**	**236.2**		**PHASE A:**		**27752**		**231.3**	**1.) SECTION 1 OF 2-SECTION PANEL.**					
				PHASE B:		**28582**		**238.2**	**2.) NEUTRAL BAR, GROUND BAR.**					
				PHASE C:		**28688**		**239.1**	**3.) BREAKER CHARACTERISTICS SHALL MATCH LOAD(S) SERVED.**					

SECTION 2

20A-1P		DOOR OPERATOR		1176	43	2832			44	1656		AIR VAC 3/4 HP		20A-1P
20A-1P		DOOR OPERATOR		1176	45		2832		46	1656		AIR VAC 3/4 HP		20A-1P
20A-1P		DOOR OPERATOR		1176	47			2832	48	1656		AIR VAC 3/4 HP		20A-1P
20A-2P		AIR COMPRESSOR		1584	49	1584			50			SPARE		20A-1P
				1584	51		1584		52			SPARE		20A-1P
		SPACE			53			528	54	528		HOT WATER RECIRC PUMP		20A-1P
					55				56			SPACE		
20A-3P		SPARE			57				58			SPACE		
					59				60			SPACE		
				960	61	1752			62	792				
20A-2P		PRESURE PUMP		960	63		1752		64	792		WELL		20A-2P
20A-1P		SPARE			65				66			SPACE		
				2292	67	21061			68	18769				
50A-3P		PANEL "P"		1296	69		20095		70	18799		PANEL "A"		200A-3P
				912	71			19046	72	18134				
					73				74					
					75				76					
					77				78					
					79				80					
					81				82					
					83				84					
	KVA	**AMPS**		**PHASE TOTALS:**		**VA**		**AMPS**	**NOTES:**				08-2025	
SECT. 1	**85.0**	**236.2**		**PHASE A:**		**27229**		**226.9**	**1.) SECTION 2 OF 2-SECTION PANEL.**					
SECT. 2	**75.9**	**210.8**		**PHASE B:**		**26263**		**218.9**	**2.) NEUTRAL BAR, GROUND BAR.**					
TOTAL	**160.9**	**447.0**		**PHASE C:**		**22406**		**186.7**	**3.) BREAKER CHARACTERISTICS SHALL MATCH LOAD(S) SERVED.**					

PANEL: "SES" | **VOLTAGE:** 208/120V | **MAINS:** 800A MLO | **WIRING:** 3 PHASE, 4-W
LOCATION: ELECTRICAL ROOM | **MOUNTING:** FLUSH/SURFACE | **DEVICE FAMILY:** BOLT-ON | **ENCLOSURE:** NEMA 3R
FED FROM: UTILITY TRANSFORMER | **FEED:** BOTTOM - TOP | **O.C. DEVICE:** CIRCUIT BREAKER | **AIC:** 65,000

BKR SIZE	NOTES	DESCRIPTION	CODE	LOAD (VA)	CKT NO.	PHASE A	PHASE B	PHASE C	CKT NO.	LOAD (VA)	CODE	DESCRIPTION	NOTES	BKR SIZE
				13800		68781				54981				
600A-3P	LUGS SHALL BE SIZED FOR #2/0 CU WIRE	FIRE PUMP CONTROLLER		13800	1		68645		2	54845		PANEL "M"		500A-3P
				13800				36206		22406				
XXXA-3P		SPACE			3				4			SPACE		XXXA-3P
XXXA-3P		SPACE			5				6			SPACE		XXXA-3P
				PHASE TOTALS:		**VA**		**AMPS**	**NOTES:**				08-2025	
				PHASE A:		**68781**		**573.2**	**1.) NEUTRAL BAR, GROUND BAR.**					
	KVA	**AMPS**		**PHASE B:**		**68645**		**572.0**	**2.) BREAKER CHARACTERISTICS SHALL MATCH LOAD(S) SERVED.**					
TOTAL	**188.5**	**523.7**		**PHASE C:**		**51094**		**425.8**						

PANEL: "P" (EXISTING) | **VOLTAGE:** 208/120V | **MAINS:** 100A MLO / MCB | **WIRING:** 3 PHASE, 4-W
LOCATION: PUMP ROOM | **MOUNTING:** SURFACE | **DEVICE FAMILY:** BOLT-ON | **ENCLOSURE:** NEMA 3R
FED FROM: PANEL "M" | **FEED:** TOP | **O.C. DEVICE:** CIRCUIT BREAKER | **AIC:** 10,000

BKR SIZE	NOTES	DESCRIPTION	CODE	LOAD (VA)	CKT NO.	PHASE A	PHASE B	PHASE C	CKT NO.	LOAD (VA)	CODE	DESCRIPTION	NOTES	BKR SIZE
20A-1P		IRRIGATION PUMP	REC	1176	1	1968			2	792	REC			
20A-1P		RECEPTACLE	REC	180	3		972		4	792	REC	JOCKEY PUMP		20A-3P
20A-1P		LIGHTING	LTG	120	5			912	6	792	REC			
20A-1P		SPARE			7	324			8	324	REC	HEATER		20A-2P
20A-1P		SPARE			9		324		10	324	REC			
20A-1P		SPARE			11				12			SPACE		
		SPACE			13				14			SPACE		
		SPACE			15				16			SPACE		
		SPACE			17				18			SPACE		
					19				20					
					21				22					
					23				24					
					25				26					
					27				28					
					29				30					
					31				32					
					33				34					
					35				36					
					37				38					
					39				40					
					41				42					
				PHASE TOTALS:		**VA**		**AMPS**	**NOTES:**				08-2025	
				PHASE A:		**2292**		**19.1**	**1.) GROUND BAR, NEUTRAL BAR.**					
	KVA	**AMPS**		**PHASE B:**		**1296**		**10.8**	**2.) BREAKER CHARACTERISTICS SHALL MATCH LOAD(S) SERVED.**					
TOTAL	**4.5**	**12.5**		**PHASE C:**		**912**		**7.6**						

STUDIO SW ARCHITECTS
2101 Mountain Road NW Suite B | Albuquerque NM 87104
505-843-9639 | www.studioswarch.com

© 2021 Studio Southwest Architects, Inc. Duplication or reproduction by any means without the express written consent of Studio Southwest Architects, Inc. is a violation of federal and international law. The information contained in this document is the intellectual property of Studio Southwest Architects, Inc. and all rights thereto are reserved.

CONSULTANTS

TESTUDO ENGINEERING
7007 Wyoming Blvd NE Suite E-1
Albuquerque, NM 87109
WWW.TESTUDOENG.COM PH:505-554-1282

Architect | Engineer

FELIX A. SAUCEDA NEW MEXICO 20576 8/14/2025 PROFESSIONAL ENGINEER

SFC HONDO FIRE STATION

645 OLD LAS VEGAS HIGHWAY
SANTA FE, NM 87505

APPARATUS BAY
NOT IN CONTRACT
AREA OF WORK

Key Plan NTS

No	Date	Description
		Revision Schedule

ISSUE: 100% CONSTRUCTION DOCUMENTS
PROJECT NUMBER: 2502
FILE: 25006_E-602.dwg
DRAWN BY: JT
CHECKED BY: FS
DATE: AUGUST 14, 2025

SHEET TITLE
PANEL SCHEDULES

E-602