SANTA FE COUNTY, NEW MEXICO
PUBLIC WORKS DEPARTMENT
ARROYO HONDO TRAIL
SEGMENT 4
RANCHO VIEJO FIRE STATION TRAILHEAD TO OLD DINOSAUR TRAIL
CN S100560

CN: S100560
LENGTH OF PROJECT

SEGMENT 4: STA 39+98.79 TO 103+11.54 = 6312.75 LF = 1.20 MILES
SEGMENT 4B: STA 200+00 TO 216+81.81 = 1681.81 LF = 0.32 MILES

TOTAL = 7994.56 LF = 1.52 MILES

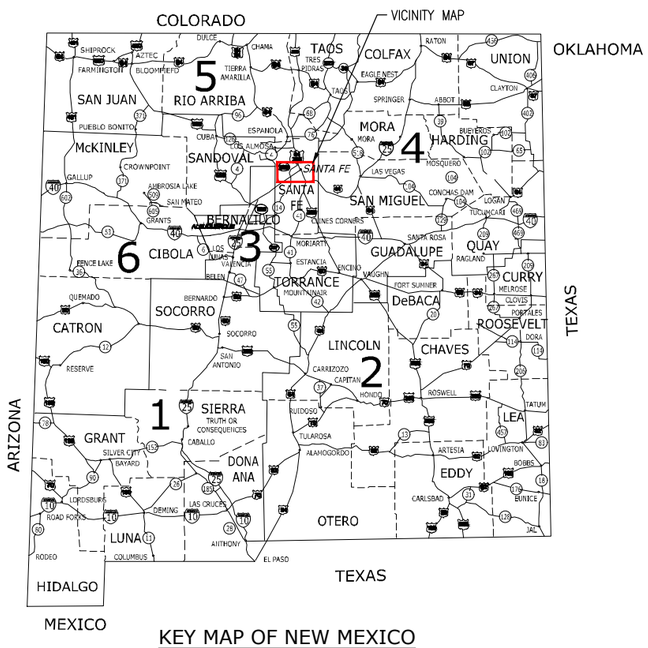

KEY MAP OF NEW MEXICO

INDEX OF SHEETS

SHEET NO	DRAWING NO	DESCRIPTION
1	TT-01	COVER SHEET
2	GN-01	GENERAL NOTES
3	GN-02	TRAIL CONSTRUCTION NOTES
4	SQ-01	SUMMARY OF QUANTITIES
5-6	SQ-02 to SQ-03	MISCELLANEOUS QUANTITIES
7	OS-01	OVERALL SITE MAP
8	ES-01	ENVIRONMENTAL COMMITMENTS
9	TS-01	TYPICAL SECTIONS
10	EC-01	SWPPP
11-14	EC-02 to EC-05	EROSION CONTROL PLAN
15-16	DT-01 to DT-02	DETAILS
17	SY-01	LAND SURVEY CONTROL DIAGRAM
18-21	GE-01 to GE-04	GEOMETRIC CONTROL PLAN
22-26	PP-01 to PP-05	PLAN AND PROFILES
27-28	PP-06 to PP-07	PLAN AND PROFILES (SEGMENT 4B)
29	TH-01	TRAILHEAD DETAILS
30	AG-01	AT-GRADE CROSSING DETAILS
31	B-01	BRIDGE GENERAL INFORMATION
32-33	B-02 to B-03	BRIDGE GENERAL LAYOUT
34-36	B-04 to B-06	BRIDGE DETAILS
37-38	W-01 to W-02	GRAVITY WALL PLAN & PROFILES
39-48	X-1 to X-10	CROSS SECTIONS
49-51	X-11 to X-13	CROSS SECTIONS
52	W1-1	WAYFINDING GENERAL NOTES
53	W4-2	WAYFINDING PLAN
54	W4-3	WAYFINDING PLAN SIGN CONTENT MATRIX
55-58	W-1 to W-4	WAYFINDING DETAILS
		EASEMENT PLATS

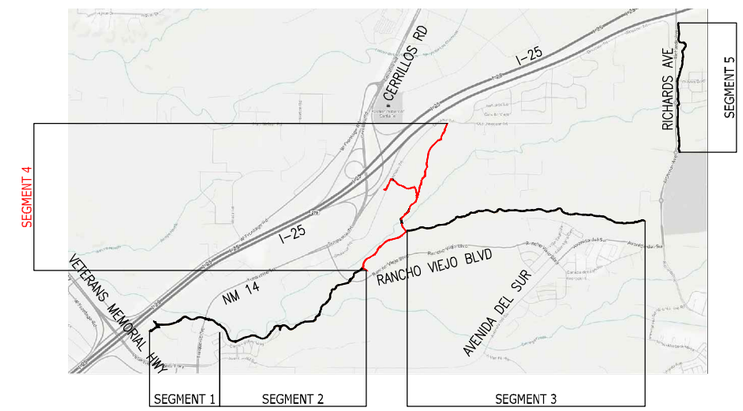

PROJECT INTENT:

THE PURPOSE OF THIS PROJECT IS TO CONSTRUCT A CONCRETE SHARED USE PATH CONNECTING THE EXISTING RANCHO VIEJO FIRE STATION TRAILHEAD TO THE EXISTING LA PADERA TRAIL AND THE EXISTING TRAIL AT THE I25 NM 14 INTERCHANGE. THE PROJECT INCLUDES CONCRETE SIDEWALK 6" (COLORED), EARTHWORK, EROSION CONTROL, ROCK GRAVITY WALLS, TWO PREFABRICATED STEEL TRUSS BRIDGES INCLUDING DRILLED SHAFT FOUNDATIONS, SEEDING, AND TRAIL SIGNS.

NMDOT STANDARD DRAWINGS REFERENCED

NMDOT STANDARD DETAIL DRAWINGS REFERENCED	
DRAWING NUMBER	DRAWING TITILE
603-01-1/7 THROUGH 7/7	TEMPORARY EROSION & SEDIMENT CONTROL MEASURES (4-29-04)
701-02-1/3 THROUGH 3/3	SMALL SIGN SUPPORT INSTALLATION DETAILS (01-11-05)

New Mexico DEPARTMENT OF TRANSPORTATION
MOBILITY FOR EVERYONE

U.S. Department of Transportation
Federal Highway Administration

PETER J. LORIS
NEW MEXICO
19400
7/31/2018
PROFESSIONAL ENGINEER

Print Date: Jul 31, 2018	Sheet Revisions			As Constructed	ARROYO HONDO TRAIL COVER SHEET	Project No./Code
File Name: 12126 (01) Title Sheet (Seg 4).dwg	Date:	Comments	Init.	No Revisions:		Arroyo Hondo Trail
Horiz. Scale: Vert. Scale: As Noted				Revised:	Designer: SJB / Structure Numbers	325-12126
Unit Information Unit Leader Initials				Void:	Detailer: LX / Sheet Subset: TT-01 / Subset Sheets: 1	1

Loris A DIVISION OF OTAK

SANTA FE COUNTY

G:\7.2 Clients\325 - Santa Fe County-NM\12126 - Arroyo Hondo Trail\50 DWG\Segment 4\12126 (01) Title Sheet (Seg 4).dwg Jul 31, 2018 - 11:20am

GENERAL NOTES

1. THE CONTRACTOR SHALL ABIDE BY ALL LOCAL, STATE, AND FEDERAL LAWS, REGULATIONS, AND RULES WHICH APPLY TO THIS PLAN SET. THIS SHALL INCLUDE ALL ADA REGULATIONS.

2. THE NEW MEXICO DEPARTMENT OF TRANSPORTATION'S "STANDARD SPECIFICATIONS FOR HIGHWAY AND BRIDGE CONSTRUCTION, 2014 EDITION" SHALL GOVERN CONSTRUCTION OF THIS PROJECT.

MONUMENTATION INFORMATION

3. INFORMATION PERTAINING TO THE MONUMENTATION FOR THIS PROJECT MAY BE OBTAINED FROM THE SANTA FE COUNTY – GIS DIVISION AT (505)995-2732.

4. PROTECTION OF SURVEY MONUMENTS; THE CONTRACTOR SHALL TAKE PRECAUTIONS TO PROTECT HORIZONTAL AND VERTICAL CONTROL SURVEY MONUMENTS (MARK) FROM DAMAGE PRIOR TO INITIATING CONSTRUCTION. AN INVENTORY OF THE EXISTING MONUMENTS WILL BE TAKEN BY THE PROJECT MANAGER AND THE CONTRACTOR WITH ACKNOWLEDGEMENTS PRIOR TO START OF CONSTRUCTION. IF, DURING THE COURSE OF CONSTRUCTION OPERATIONS, THE CONTRACTOR DISTURBS OR DESTROYS A MARK, THE CONTRACTOR SHALL ESTABLISH A NEW MARK IN COMPLIANCE WITH THE STANDARDS AND PROCEDURES SET FORTH IN THE "GEODETIC MARK PRESERVATION GUIDEBOOK," NATIONAL GEODETIC SURVEY, MARCH 1990, CONTACT # NGS MARK PRESERVATION CENTER-NOAA, TELEPHONE (505)768-3606. THIS WORK SHALL BE CONSIDERED INCIDENTAL TO THE COMPLETION OF THE PROJECT AND NO SEPARATE MEASUREMENT OR PAYMENT WILL BE MADE THEREFORE.

EARTHWORK

5. THE EARTHWORK QUANTITIES ARE BASED ON FINAL VOLUMES COMPACTED IN PLACE. ON-SITE EXCAVATION AND BACKFILL QUANTITY IS BASED ON AN ASSUMED SHRINKAGE FACTOR OF 20%.

6. UNLESS OTHERWISE STATED WITHIN THIS PLAN SET, ALL SIDE SLOPES SHALL BE 3H:1V MAXIMUM, KEEPING SLOPES FLATTER WHEREVER POSSIBLE AS DIRECTED BY THE PROJECT MANAGER. SLOPES SHALL TRANSITION SMOOTHLY TO EXISTING GRADES AND ADJACENT STRUCTURES IN ALL CASES. THE CONTRACTOR SHALL WARP SLOPES WHERE NECESSARY TO STAY WITHIN THE RIGHT-OF-WAY OR CONSTRUCTION LIMITS, OR TO MEET EXISTING STRUCTURES.

7. NO MATERIAL PITS HAVE BEEN IDENTIFIED FOR THIS PROJECT. IT IS ANTICIPATED THAT ALL FILL MATERIAL SHALL BE OBTAINED ON-SITE. NO ADDITIONAL PAYMENT SHALL BE MADE FOR HAULING OF ON-SITE MATERIAL. SEE EARTHWORK CROSS SECTIONS.

8. ALL EXCAVATION TRENCHING, AND SHORING ACTIVITIES MUST BE CARRIED OUT IN ACCORDANCE WITH OSHA 29, CFR 1926.650, SUBPART P.

9. THE CONTRACTOR SHALL BE RESTRICTED TO THE USE OF A 35-TON NON-VIBRATING ROLLER MAXIMUM TO OBTAIN THE REQUIRED COMPACTION FOR EMBANKMENT AND SUB GRADE ADJACENT TO VERTICAL BANKS, WHERE THE USE OF HEAVIER EQUIPMENT COULD DAMAGE UNDERGROUND UTILITIES OR OTHER STRUCTURES.

10. CONTRACTOR SHALL PROMPTLY CLEAN UP ANY MATERIAL EXCAVATED WITHIN THE PUBLIC RIGHT-OF-WAY SO THAT THE EXCAVATED MATERIAL IS NOT SUSCEPTIBLE TO BEING WASHED DOWN THE STREET, INTO STORM DRAIN SYSTEMS, OR DOWN ARROYOS.

UTILITIES

11. ** WARNING ** – EXISTING UTILITY LINE LOCATIONS ARE SHOWN IN APPROXIMATE MANNER ONLY, AND OTHER SUCH LINES MAY EXIST WHERE NONE ARE SHOWN. THE LOCATION OF ANY SUCH EXISTING LINES IS BASED UPON INFORMATION PROVIDED BY THE UTILITY COMPANY, THE OWNER, OR BY OTHERS, AND THE INFORMATION MAY BE INCOMPLETE OR MAY BE OBSOLETE BY THE TIME CONSTRUCTION COMMENCES. THE CONTRACTOR SHALL INFORM ITSELF OF THE LOCATION OF ANY UTILITY LINE IN OR NEAR THE AREA OF THE WORK IN ADVANCE OF AND DURING EXCAVATION WORK. THE CONTRACTOR IS FULLY RESPONSIBLE FOR ANY AND ALL DAMAGE CAUSED BY ITS FAILURE TO LOCATE, IDENTIFY, AND PRESERVE ANY AND ALL EXISTING UTILITIES. THE CONTRACTOR SHALL COMPLY WITH STATE STATUTES, MUNICIPAL AND LOCAL ORDINANCES, RULES AND REGULATIONS PERTAINING TO THE LOCATION OF THESE LINES AND FACILITIES, IN PLANNING AND CONDUCTING EXCAVATION, WHETHER BY CALLING OR NOTIFYING THE UTILITIES, COMPLYING WITH "BLUE STAKES" PROCEDURES, OR OTHERWISE.

12. THE CONTRACTOR SHALL NOTIFY ALL UTILITY COMPANIES WHEN WORKING NEAR THEIR SYSTEMS. TWO WORKING DAYS PRIOR TO ANY EXCAVATION, THE CONTRACTOR SHALL CALL NEW MEXICO ONE CALL SYSTEM INC. AT 1-800-321-2537 REGARDING LOCATION OF EXISTING UTILITIES. THE CONTRACTOR MAY BE REQUIRED TO RESCHEDULE ITS ACTIVITIES TO ALLOW UTILITY CREWS TO PERFORM THEIR REQUIRED WORK.

13. IT WILL BE THE CONTRACTOR'S RESPONSIBILITY TO PROTECT ALL EXISTING UTILITIES AND THEIR APPURTENANCES WITHIN THE CONSTRUCTION AREA. THE CONTRACTOR SHALL ASCERTAIN THE LOCATION OF ALL UTILITIES PRIOR TO CONSTRUCTION. THIS WORK SHALL BE CONSIDERED INCIDENTAL TO THE COMPLETION OF THE PROJECT AND NO ADDITIONAL PAYMENT WILL BE MADE THEREFORE. DAMAGES OR REPAIRS THAT OCCUR DURING CONSTRUCTION SHALL BE MADE AT THE CONTRACTOR'S EXPENSE AND NO ADDITIONAL PAYMENT WILL BE MADE THEREFORE. THE INCIDENTAL WORK SHALL ALSO.

TRAFFIC CONTROL (IF APPLICABLE)

14. THE CONTRACTOR SHALL BE RESPONSIBLE FOR OBTAINING APPROVAL FOR TRAFFIC CONTROL PROCEDURES FROM SANTA FE COUNTY PUBLIC WORKS. PAYMENT FOR ALL TRAFFIC CONTROL SHALL BE MADE UNDER ITEM 702810 – TRAFFIC CONTROL DEVICES FOR CONSTRUCTION (LS).

15. THE CONTRACTOR SHALL BE THE RESPONSIBLE PARTY FOR THE IMPLEMENTATION AND MAINTENANCE OF ALL TRAFFIC CONTROL PROCEDURES AND MATERIALS. THE CONTRACTOR SHALL HAVE PERSONNEL AVAILABLE 24 HOURS PER DAY, SEVEN (7) DAYS PER WEEK TO INSPECT AND MAINTAIN TRAFFIC CONTROL DEVICES AS DIRECTED BY THE PROJECT MANAGER.

16. THE CONTRACTOR WILL BE REQUIRED TO MAINTAIN A TRAFFIC CONTROL DIARY, WHICH SHALL BE AVAILABLE FOR REVIEW BY SANTA FE COUNTY AND/ OR CITY PROJECT MANAGERS.

17. THE CONTRACTOR IS RESPONSIBLE FOR PROTECTING THE SAFETY OF PEDESTRIAN AND VEHICULAR TRAFFIC IN THE CONSTRUCTION ZONE BY ENSURING THAT ALL NECESSARY SAFETY PRECAUTIONS ARE TAKEN, AS REQUIRED BY FEDERAL, STATE, AND LOCAL AUTHORITIES, INCLUDING, BUT NOT LIMITED TO: GUARD FENCES, BARRICADES, LIGHTS, AND WARNING SIGNS.

GENERAL CONSTRUCTION

18. MAINTENANCE OF AS-BUILT PLANS: THE CONTRACTOR SHALL MAINTAIN AN UP-TO-DATE SET OF AS-BUILT PLANS FOR THE PROJECT. THESE PLANS SHALL BE KEPT CURRENT WITHIN TWO WEEKS AT ALL TIMES AND SHALL BE SUBJECT TO REVIEW BY THE PROJECT MANAGER THROUGHOUT THE PROJECT AND WILL BE REVIEWED BY THE PROJECT MANAGER FOR ACCURACY AND COMPLETENESS AT LEAST ONCE EVERY 30 DAYS. THE FINAL AS-BUILT PLANS SHALL BE SUBMITTED TO THE PROJECT MANAGER PRIOR TO FINAL PAYMENT.

19. CONTRACTOR SHALL RECORD DATA REGARDING ALL UTILITY LINES AND ACCESSORIES FOR THE PREPARATION OF "AS BUILT" DRAWINGS. CONTRACTOR SHALL NOT COVER UTILITY LINES AND ACCESSORIES UNTIL ALL DATA HAS BEEN RECORDED.

20. THE CONTRACTOR SHALL BE RESPONSIBLE FOR MAKING THE NECESSARY ARRANGEMENT FOR OBTAINING THE WATER NECESSARY FOR THE CONSTRUCTION OF THIS PROJECT, REGARDLESS OF THE AVAILABILITY OF WATER. THE COST OF WATER WILL BE INCIDENTAL TO ITEM 203000 – UNCLASSIFIED EXCAVATION.

21. THE CONTRACTOR SHALL BE RESPONSIBLE FOR ALL REMOVALS REQUIRED TO COMPLETE THE PROJECT. ADDITIONAL REMOVALS NOT SHOWN ON THE PLANS MAY BE DESIGNATED BY THE PROJECT MANAGER. ALL REMOVALS, UNLESS OTHERWISE INDICATED, WILL BE INCIDENTAL TO BID ITEM 201000, CLEARING AND GRUBBING.

22. THE CONTRACTOR WILL BE REQUIRED TO CONFINE THEIR WORK WITHIN THE CONSTRUCTION LIMITS AND/OR NEW RIGHT-OF-WAY LIMITS. PARKING OF PRIVATE VEHICLES SHALL NOT BE ALLOWED ALONG CONSTRUCTION AREAS THROUGHOUT THE CONSTRUCTION LIMITS. IT SHALL BE THE CONTRACTOR'S RESPONSIBILITY TO PROHIBIT VEHICLES AND EQUIPMENT FROM DRIVING UPON, ACROSS, OR TURNING ON PRIVATE PROPERTY ADJACENT TO PROJECT LIMITS.

23. THE CONTRACTOR IS RESPONSIBLE FOR ANY DAMAGE CAUSED TO EXISTING WALLS, FENCES, SIDEWALKS, TRAIL SURFACES, SEWER OR WATER LINES, VALVE BOXES, MANHOLES, CURB AND GUTTER, ETC., DURING CONSTRUCTION AND SHALL REPAIR OR REPLACE SAME AT THEIR OWN EXPENSE. THE CONTRACTOR IS RESPONSIBLE FOR DOCUMENTATION OF ANY EXISTING DAMAGE PRIOR TO START OF CONSTRUCTION.

24. ALL REGULATORY SIGNS AND MARKINGS SHALL BE IN ACCORDANCE WITH THE 2009 EDITION OF THE MANUAL ON UNIFORM TRAFFIC CONTROL DEVICES FOR STREETS AND HIGHWAYS – "TRAFFIC CONTROL DEVICES FOR BICYCLE FACILITIES" – PUBLISHED BY THE U.S. DEPARTMENT OF TRANSPORTATION. COORDINATE LOCATION FOR NEW SIGNS AND/OR POSTS WITH THE PROJECT MANAGER.

25. UPON COMPLETION OF CONSTRUCTION ALL AREAS WITHIN PROJECT LIMITS WHICH ARE DISTURBED OR ARE TO BE REVEGETATED SHALL BE SEEDED IN ACCORDANCE WITH SECTION 632 – "SEEDING" – OF THE NMDOT STANDARD SPECIFICATIONS, EXCEPT AS MODIFIED HEREIN.

26. ALL DIMENSIONS ON PLANS ARE FOR INFORMATION PURPOSES ONLY. THE CONTRACTOR SHALL FIELD VERIFY ALL DIMENSIONS AND ALL OTHER PERTINENT INFORMATION THAT MAY BE REQUIRED TO COMPLETE THE WORK.

27. FIELD VERIFICATION: THE CONTRACTOR SHALL FIELD VERIFY THE GRADES AND ELEVATIONS BEFORE PROCEEDING WITH THE WORK. IF THERE IS A DISCREPANCY IN THE PROPOSED GRADE ELEVATIONS AND THE ACTUAL GRADE ELEVATIONS, THE CONTRACTOR SHALL NOTIFY THE PROJECT MANAGER TO DETERMINE WHAT CORRECTIONS NEED TO BE APPLIED. THIS WORK WILL BE PAID FOR UNDER THE CONTRACT PRICE FOR ITEM NUMBER 801000 "CONSTRUCTION STAKING BY THE CONTRACTOR" AND NO ADDITIONAL MEASUREMENT OR PAYMENT WILL BE MADE THEREFORE.

28. OVERNIGHT PARKING OF CONSTRUCTION EQUIPMENT SHALL NOT OBSTRUCT DRIVEWAYS OR TRAFFIC LANES. THE CONTRACTOR SHALL NOT STORE ANY EQUIPMENT OR MATERIAL WITHIN THE PUBLIC RIGHT-OF-WAY. THE CONTRACTOR MUST MAKE ARRANGEMENT TO STORE EQUIPMENT AND MATERIALS OUTSIDE PUBLIC RIGHT-OF-WAY.

29. CONTRACTOR SHALL MAINTAIN A GRAFFITI-FREE WORK SITE. CONTRACTOR SHALL REMOVE ANY GRAFFITI WITHIN 24 HOURS FROM ALL EQUIPMENT, WHETHER PERMANENT OR TEMPORARY.

UTILITY CONTACTS

UTILITY	ENTITY	TELEPHONE
WATER	SANTA FE COUNTY	(505) 992-9870
WASTEWATER	SANTA FE COUNTY	(505) 992-9870
SOLID WASTE	SANTA FE COUNTY	(505) 992-3010
ELECTRIC	PNM	(888) 342-5766
GAS	NEW MEXICO GAS COMPANY	(888) 664-2726
TELEPHONE	CENTURY LINK	1-800-321-2537
CABLE TV	COMCAST	(505) 474-7886

PETER J. LORIS
NEW MEXICO
19400
7/31/2018
PROFESSIONAL ENGINEER

TRAIL CONSTRUCTION NOTES:

1. CONSTRUCTION STAKING: THE CONTRACTOR SHALL STAKE THE ALIGNMENT AT NO GREATER THAN 20' INCREMENTS PRIOR TO CONSTRUCTION. CONSTRUCTION STAKING SHALL BE BASED UPON THE HORIZONTAL CONTROL AND ALIGNMENT INFORMATION INCLUDED IN THE PLANS. AUTOCAD FILES OF THE TRAIL DESIGN AND ASSOCIATED FEATURES WILL BE PROVIDED TO THE CONTRACTOR UPON REQUEST. ALL STAKING MATERIALS SHALL BE REMOVED FROM THE SITE UPON COMPLETION OF THE PROJECT.
2. TRAIL ALIGNMENT: IT IS EXPECTED THAT THE CONTRACTOR MAKE MINOR ADJUSTMENTS TO THE ALIGNMENT DURING CONSTRUCTION TO IMPROVE DRAINAGE, AVOID IMPACTS TO VEGETATION THAT ARE NOT SPECIFICALLY IDENTIFIED FOR REMOVAL, MINIMIZE SITE IMPACTS. ALIGNMENT SHIFTS OF GREATER THAN 2' SHALL BE APPROVED BY THE OWNER PRIOR TO COMPLETING CONSTRUCTION. MINOR MODIFICATIONS TO THE DESIGN DURING CONSTRUCTION ARE AN EXPECTED PART OF THE WORK AND NOT JUSTIFICATION FOR CHANGES TO THE CONTRACT.
3. GRADING: THE CONTRACTOR SHALL FOLLOW THE PLANS WHEN SPECIFIC GRADING AND/OR TRAIL PROFILE INFORMATION IS PROVIDED.
4. LONGITUDINAL GRADES: UNLESS OTHERWISE SHOWN IN THE PLANS, THE TRAIL SHALL BE CONSTRUCTED ACCORDING TO THE FOLLOWING MAXIMUM LONGITUDINAL GRADES:

   1:20 (5%) ANY DISTANCE
   1:12 (8.33%) UP TO 200 FEET

   LONGITUDINAL GRADES THAT EXCEED THESE VALUES SHALL BE APPROVED BY THE OWNER PRIOR TO COMPLETING CONSTRUCTION UNLESS OTHERWISE SPECIFICALLY IDENTIFIED IN THE PLANS.
5. CROSS SLOPE: THE TREAD CROSS SLOPE SHALL BE LESS THAN 2% UNLESS OTHERWISE SHOWN IN THE PLANS. THE CONTRACTOR SHALL VERIFY CROSS SLOPE WITH A DIGITAL SMART LEVEL OR OTHER APPROPRIATE MEASURING TOOLS DURING CONSTRUCTION TO PROPERLY CONSTRUCT TREAD CROSS SLOPE.
6. VEGETATION: THE CONTRACTOR SHALL PROTECT EXISTING VEGETATION NOT SPECIFICALLY IDENTIFIED FOR REMOVAL TO THE GREATEST EXTENT POSSIBLE. REMOVAL OF TREES, UNLESS SPECIFICALLY IDENTIFIED IN THE PLANS SHALL BE APPROVED BY THE OWNER PRIOR TO REMOVAL.
7. DITCHES: CONSTRUCT DITCHES TO BE FREE OF LOOSE ROCKS, ROOTS, STICKS, AND OTHER OBSTRUCTIONS UNLESS OTHERWISE SHOWN IN THE PLANS.
8. SITE ACCESS: THE CONTRACTOR SHALL USE THE PROPOSED TRAIL ALIGNMENT FOR THE TRANSPORT OF MATERIALS AND EQUIPMENT DURING CONSTRUCTION. THE CREATION OF ADDITIONAL PARALLEL ACCESS ROUTES WILL NOT BE ALLOWED. DISTURBANCE OF CURRENTLY UNDISTURBED AREAS, UNLESS PART OF THE NEW TRAIL ALIGNMENT, MUST BE AVOIDED. ANY AREA DISTURBED OUTSIDE OF THE FINISHED TRAIL TREAD MUST BE RESTORED TO PRECONSTRUCTION CONDITIONS AT NO ADDITIONAL COST TO THE PROJECT.
9. CONSTRUCTION EQUIPMENT: THE CONTRACTOR SHALL USE EQUIPMENT APPROPRIATELY SIZED FOR TRAIL CONSTRUCTION. THE EQUIPMENT MUST BE WITHIN THE EXPECTED AREA OF DISTURBANCE OF THE TRAIL WITHOUT ADDITIONAL CLEARING OR DISTURBANCE NEEDED SOLELY TO ACCOMMODATE THE OPERATION OF EQUIPMENT OR TRANSPORT OF MATERIALS.

LEGEND

PROPERTY LINE
EXISTING EASEMENT LINE
PROPOSED – TEMPORARY — T/E — T/E —
PROPOSED – PERMANENT — P/E — P/E —
MAJOR CONTOURS — 6445 —
MINOR CONTOURS
DRAINAGE DIRECTION
FENCE CHAINED LINK
FENCE BARBED WIRE — X — X — X — X —
CABLE FENCE
WROUGHT IRON FENCE
STEEL PIPE FENCE
RAILROAD TIE FENCE
STORM LINE — SD — SD —
OVERHEAD ELECTRIC LINE — OHE — OHE —
UNDERGROUND ELECTRIC — UGE — UGE —
GAS LINE — G — G —
IRRIGATION LINE — IRR — IRR —
SANITARY LINE — SS — SS —
CABLE TV LINE — CTV — CTV —
FIBER OPTIC LINE — FO — FO —
OVERHEAD TELEPHONE LINE — OHT — OHT —
UNDERGROUND TELEPHONE LINE — UGT — UGT —
WATERLINE — W — W —

ABBREVIATIONS TABLE

AASHTO	ASSOCIATION OF STATE HIGHWAY AND TRANSPORTATION OFFICIALS	CL / ℄	CENTER LINE	FES	FLARED END SECTION	LP	LIGHT POLE	PROP	PROPOSED	T	TELEPHONE
ABAN	ABANDON	CLR	CLEAR	FF	FINISH FLOOR / FRONT FACE	LT	LEFT / LIGHT	PRV	PRESSURE REDUCING VALVE / PRESSURE RELIEF VALVE	TAN	TANGENT
ABC	AGGREGATE BASE COURSE	CO	CLEAN OUT	FG	FINISH GRADE	MAINT	MAINTENANCE			TBC	TOP BACK OF CURB
ABUT	ABUTMENT	COM	COMMUNICATION	FH	FIRE HYDRANT	MAS	MASONRY	PSF	POUNDS PER SQUARE FOOT	TEMP	TEMPORARY
ALT	ALTERNATE	CONC	CONCRETE	FL	FLOW LINE	MATL	MATERIAL	PSI	POUNDS PER SQUARE INCH	TOC	TOP OF CONCRETE / TOP OF CURB
AMT	AMOUNT	CONST	CONSTRUCTION	FN	FENCE	MAX	MAXIMUM	PT	POINT OF TANGENCY	TOW	TOP OF WALL
APPROX	APPROXIMATE	CONT	CONTINUOUS(ATION)	FPS	FEET PER SECOND	MB	MAIL BOX	PVC	POINT OF VERTICAL CURVE / POLYVINYL CHLORIDE	TYP	TYPICAL
ASPH	ASPHALT	COR	CORNER	FT	FEET	MECH	MECHANICAL			UBC	UNIFORM BUILDING CODE
ASTM	AMERICAN SOCIETY FOR TESTING AND MATERIALS	CP	CONTROL POINT	FTG	FOOTING / FITTING	MFR	MANUFACTURER	PVMT	PAVEMENT	UE	UNDERGROUND ELECTRICAL
		CY	CUBIC YARDS	G	GAS	MH	MANHOLE	QTY	QUANTITY	UNO	UNLESS NOTED OTHERWISE
		DEMO	DEMOLITION	GA	GAUGE	MIN	MINIMUM	R/RAD	RADIUS	VERT	VERTICAL
AVG	AVERAGE	DET	DETAIL	GAL	GALLON	MISC	MISCELLANEOUS	RCP	REINFORCED CONCRETE PIPE	W	WIDE / WIDTH / WATER
AWWA	AMERICAN WATER WORKS ASSOCIATION	DIA	DIAMETER	GALV	GALVANIZED	MJ	MECHANICAL JOINT	RE/REF	REFERENCE	w/	WITH
BF	BACK FACE	DIP	DUCTILE IRON PIPE	GND	GROUND	NA	NOT APPLICABLE	REINF	REINFORCED (D) (ING) (MENT)	w/o	WITH OUT
BFV	BUTTERFLY VALVE	DWG	DRAWING	GPD	GALLONS PER DAY	NPT	NATIONAL PIPE THREAD	REQD	REQUIRED	WWF	WELDED WIRE FABRIC
BLDG	BUILDING	EA	EACH	GPM	GALLONS PER MINUTE	NTS	NOT TO SCALE	ROW	RIGHT OF WAY	X	SECTION
BM	BENCH MARK	EF	EACH FACE	GRTG	GRATING	NWL	NORMAL WATER LINE	RT	RIGHT		
BMP	BEST MANAGEMENT PRACTICE	EJ	EXPANSION JOINT	GV	GATE VALVE	OC	ON CENTER	SAN	SANITARY		
BOC	BACK OF CURB	EL/ELEV	ELEVATION	HCL	HORIZONTAL CONTROL LINE	OD	OUTSIDE DIAMETER	SD	STORM DRAIN	@	AT
BOF	BOTTOM OF FOOTING	ELEC	ELECTRICAL	HMA	HOT MIX ASPHALT	OH	OVERHEAD	SF	SQUARE FOOT	(CIP)	COMPLETE (CAST) IN PLACE
BOW	BACK OF WALK / BOTTOM OF WALL	ENGR	ENGINEER	HORIZ	HORIZONTAL	OHE	OVERHEAD ELECTRIC	SHT	SHEET		
BRG	BEARING	EOP	EDGE OF PAVEMENT	HP	HIGH POINT	PC	POINT OF CURVATURE	SPA	SPACING/SPACES		
BS	BACKSIGHT	EOTW	EDGE OF TRAVELED WAY	HVAC	HEATING, VENTILATION, AIR CONDITIONING	PEJF	PREFORMED EXPANSION JOINT FILLER	SPEC	SPECIFICATION		
C&G	CURB AND GUTTER	EQ	EQUAL	HWL	HIGH WATER LINE	PGL	PROFILE GRADE LINE	STA	STATION		
C/C	CENTER TO CENTER	EQUIP	EQUIPMENT	HWY	HIGHWAY	PI	POINT OF INTERSECTION	STD	STANDARD		
CB	CATCH BASIN	EQUIV	EQUIVALENT	ID	INSIDE DIAMETER	PL	PROPERTY LINE	STL	STEEL		
CDOT	COLORADO DEPARTMENT OF TRANSPORTATION	ESMT	EASEMENT	INV	INVERT	PP	POWER POLE	STM	STEAM	N	NORTH
		EST	ESTIMATE	INV EL	INVERT ELEVATION	PREFAB	PREFABRICATED	SWMP	STORM WATER MANAGEMENT PLAN	S	SOUTH
CFS	CUBIT FEET PER SECOND	EX	EXISTING	IRR	IRRIGATION	PRELIM	PRELIMINARY	SY	SQUARE YARD	E	EAST
CJ	CONSTRUCTION JOINT / CONTROL JOINT	FD	FOUNDATION DRAIN	LF	LINEAR FOOT	PREP	PREPARATION	SYM	SYMMETRICAL	W	WEST

PETER J. LORIS
NEW MEXICO
19400
7/31/2018
PROFESSIONAL ENGINEER

Print Date: Jul 31, 2018	Sheet Revisions		
File Name: 12126 (02-03) General Notes (Seg4).dwg	Date:	Comments	Init.
Horiz. Scale: Vert. Scale: As Noted			
Unit Information Unit Leader Initials			

Loris — A DIVISION OF OTAK

SANTA FE COUNTY

As Constructed	ARROYO HONDO TRAIL TRAIL CONSTRUCTION NOTES		Project No./Code
No Revisions:			Arroyo Hondo Trail
Revised:	Designer: SJB	Structure Numbers	325-12126
Void:	Detailer: LX		
	Sheet Subset: GN-02	Subset Sheets: 3	3

G:\7.2 Clients\325 – Santa Fe County-NM\12126 – Arroyo Hondo Trail\50 DWG\Segment 4\12126 (02-03) General Notes (Seg4).dwg Jul 31, 2018 – 11:20am

UNIT I - SUMMARY OF QUANTITIES

NMDOT ITEM NO.	DESCRIPTION	UNIT	ESTIMATE	FINAL
201000	CLEARING AND GRUBBING	L.S.	1	
203000	UNCLASSIFIED EXCAVATION	CU.YD	1,567	
206000	UNSUITABLE MATERIAL EXCAVATION	CU.YD.	38	
206100	SELECT BACKFILL MATERIAL	CU.YD.	26	
502024	DRILLED SHAFT FOUNDATION 24" DIAMETER	LIN.FT.	104	
511300	STRUCTURAL CONCRETE, CLASS A	CU.YD.	24	
512003	HIGH PERFORMANCE CONCRETE (HPD)	CU.YD.	43	
540060	REINFORCING BARS GRADE 60	LBS.	5,391	
540160	EPOXY COATED REINFORCING BARS GRADE 60	LBS.	4,560	
541405	PREFAB PEDESTRIAN BRIDGE (35 FT)	L.S.	1	
541406	PREFAB PEDESTRIAN BRIDGE (110 FT)	L.S.	1	
570018	18" CULVERT PIPE	LIN.FT.	76	
601000	REMOVAL OF STRUCTURES AND OBSTRUCTIONS	L.S.	1	
602010	RIPRAP CLASS B	CU.YD.	105	
602020	RIPRAP CLASS C	CU.YD.	170	
603150	SOIL RETENTION BLANKET	SQ.YD.	94	
603260	CULVERT PROTECTION	SQ.YD.	40	
603262	COMPOSTED MULCH SOCK	LIN.FT.	450	
603281	SWPPP PLAN PREPARATION AND MAINTENANCE	L.S.	1	
607900	WIRE FENCE	LIN.FT.	558	
608006	CONCRETE SIDEWALK 6" (COLORED)	SQ.YD	8,200	
608108	DRIVE PAD 8" (COLORED)	SQ.YD	361	
621000	MOBILIZATION	L.S.	1	
632000	CLASS A SEEDING	ACRES	3.73	
632030	CLASS D SEEDING	ACRES	0.07	
667206	LANDSCAPE BOULDERS	EACH	16	
667219	GRAVITY WALL	SQ.FT.	825	
667225	RUBBLE MASONRY VENEER	SQ.FT.	416	
667500	BOLLARD	EACH	2	
667515	LITTER RECEPTACLE	EACH	1	
701000	PANEL SIGNS	SQ.FT.	68	
701101	MULTI-DIRECTIONAL SLIP BASE POST FOR ALUMINUM PANEL SIGNS	EACH	4	
701960	STEEL POSTS FOR TRAIL SIGNS	LIN.FT.	48	
701961	VEHICULAR MONUMENT SIGN	EACH	1	
701962	KIOSK SIGN - PRIMARY	EACH	1	
701963	KIOSK SIGN - SECONDARY	EACH	1	
701964	ORIENTATION MAP SIGN	EACH	1	
701965	DIRECTIONAL SIGN - 1 FLAG	EACH	1	
701967	DIRECTIONAL SIGN - 3 FLAG	EACH	2	
701968	MARKER SIGN	EACH	2	
702810	TRAFFIC CONTROL DEVICES FOR CONSTRUCTION	L.S.	1	
704000	RETROREFLECTORIZED PAVEMENT MARKINGS 4"	LIN.FT.	732	
704224	RETROREFLECTORIZED PLASTIC PAVEMENT STRIPE 24"	LIN.FT.	50	
801000	CONSTRUCTION STAKING BY THE CONTRACTOR	L.S.	1	

UNIT I – WORK IN SANTA FE COUNTY

UNIT II - SUMMARY OF QUANTITIES

NMDOT ITEM NO.	DESCRIPTION	UNIT	ESTIMATE	FINAL
201000	CLEARING AND GRUBBING	L.S.	1	
603281	SWPPP PLAN PREPARATION AND MAINTENANCE	L.S.	1	
608006	CONCRETE SIDEWALK 6" (COLORED)	SQ.YD	63	
621000	MOBILIZATION	L.S.	1	
632000	CLASS A SEEDING	ACRES	0.03	
701963	KIOSK SIGN - SECONDARY	EACH	1	
701967	DIRECTIONAL SIGN - 3 FLAG	EACH	1	
801000	CONSTRUCTION STAKING BY THE CONTRACTOR	L.S.	1	

UNIT II – WORK IN CITY SANTA FE

PETER J. LORIS
NEW MEXICO
19400
7/31/2018
PROFESSIONAL ENGINEER

FINAL PS&E - JULY 19, 2018

G:\7.2 Clients\325 - Santa Fe County-NM\12126 - Arroyo Hondo Trail\50 DWG\Segment 4\12126 (04-06) SAQ (Seg4).dwg Feb 12, 2019 - 12:56pm

Print Date: Feb 12, 2019	Sheet Revisions		
File Name: 12126 (04-06) SAQ (Seg4).dwg	Date:	Comments	Init.
Horiz. Scale: Vert. Scale: As Noted			
Unit Information Unit Leader Initials			

Loris
A DIVISION OF OTAK

SANTA FE COUNTY

As Constructed	ARROYO HONDO TRAIL SUMMARY OF QUANTITIES		Project No./Code
No Revisions:			Arroyo Hondo Trail
Revised:	Designer: SJB	Structure Numbers	325–12126
Void:	Detailer: LX		
	Sheet Subset: SQ-01	Subset Sheets: 3	4

EARTHWORK SUMMARY - UNIT I

STATION	TO	STATION	RT/LT	203000 UNCLASSIFIED EXCAVATION CU.YD	EMBANKMENT CU.YD.	EXCESS MATERIAL CU.YD.	REMARKS
39+99.00	to	102+45.00		1,016	948	-122	SEGMENT 4
200+00	to	216+96		551	201	310	SEGMENT 4B
		SUBTOTAL		1,567	1,149	188	
		SHRINKAGE @ 20%			230		
		PROJECT USE		1,567	1,379	188	

SURFACING SUMMARY - UNIT I

STATION	TO	STATION	RT/LT	DESCRIPTION	608006 CONCRETE SIDEWALK 6" (COLORED) L.F.	AVG. WIDTH (FT)	SQ.YD	608108 DRIVE PAD 8" (COLORED) L.F.	AVG. WIDTH (FT)	SQ.YD
39+99.00		41+82.00			183	10.00	203			
42+51.00		45+55.00			304	10.00	338			
45+55.00		46+55.00						100	10.00	111
46+55.00		49+90.00			335	10.00	372			
49+90.00		50+50.00						60	10.00	67
50+50.00		64+51.16			1401	10.00	1557			
65+98.32		86+30.00			2032	10.00	2257			
86+30.00		86+80.00						50	10.00	56
86+80.00		100+60.00			1380	10.00	1533			
100+60.00		101+20.00						60	10.00	67
101+20.00		102+46.00			126	10.00	140			
200+00.00		203+65.00			365	10.00	406			
203+65.00		204+20.00						55	10.00	61
204+20.00		211+61.00			741	10.00	823			
211+87.00		216+24.81			438	10.00	486			
				APPROACH ABUT 1 & 2 and Seg2 End			44			
				APROACH ABUT 3 & 4			27			
				WALL 1 - WARNING STRIP			3			
				WALL 2- WARNING STRIP			11			
				WALL 3 - WARNING STRIP			20			
				SUBTOTAL			8,200			361
				PROJECT USE			8,200			361

STRUCTURES SUMMARY - UNIT I

KEYED NOTE	STA.	206000 UNSUITABLE MATERIAL EXCAVATION CU.YD.	206100 SELECT BACKFILL MATERIAL CU.YD.	502024 DRILLED SHAFT FOUNDATION 24" DIAMETER LIN.FT.	511300 STRUCTURAL CONCRETE, CLASS A CU.YD.	512003 HIGH PERFORMANCE CONCRETE (HPD) CU.YD.	540060 REINFORCING BARS GRADE 60 LBS.	540160 EPOXY COATED REINFORCING BARS GRADE 60 LBS.	541405 PREFAB PEDESTRIAN BRIDGE (35 FT) L.S.	541406 PREFAB PEDESTRIAN BRIDGE (110 FT) L.S.	602020 RIPRAP CLASS C CU.YD.	667225 RUBBLE MASONRY VENEER SQ.FT.	REMARKS
	42+00.00	19	13	40	11	15	2,380	2,020	1		83	192	BRIDGE #1
	64+00.00	19	13	64	13	28	3,011	2,540		1	86	224	BRIDGE #2
	SUBTOTAL	38	26	104	24	43	5,391	4,560	1	1	170	416	
	PROJECT USE	38	26	104	24	43	5,391	4,560	1	1	170	416	

BARRIERS AND FENCING SUMMARY - UNIT I

KEYED NOTE	STATION	TO	STATION	RT/LT	607900 WIRE FENCE LIN.FT.	REMARKS
	52+00.00		57+30.00	LT	530	FENCING OF L'HEUREXPROPERTY
	211+75				14	NEW END BRACES AT FENCE BREAKS
	216+45				14	NEW END BRACES AT FENCE BREAKS
				SUBTOTAL	558	
				PROJECT USE	558	

DRAINAGE STRUCTURE SUMMARY - UNIT I

KEYED NOTE	STA.	570018 18" CULVERT PIPE LIN.FT.	602010 RIPRAP CLASS B CU.YD.	602020 RIPRAP CLASS C CU.YD.		REMARKS
DP4-2	70+30.00		18			
DP4-3	73+25.00	28	4			
DP4-4	79+97.00		18			
DP4-5	95+70.00	22	4			
DP4B-1	202+15.00	26	4			
	74+02.00		57			TYPICAL SECTION S3
	42+00.00			83		BRIDGE 1
	64+00.00			86		BRIDGE 2
	SUBTOTAL	76	105	170		
	PROJECT USE	76	105	170		

SURFACING SUMMARY - UNIT II

STATION	TO	STATION	RT/LT	DESCRIPTION	608006 CONCRETE SIDEWALK 6" L.F.	AVG. WIDTH (FT)	SQ.YD
216+24.81		216+81.48			57	10.00	63
				SUBTOTAL			63
				PROJECT USE			63

TEMPORARY EROSION AND SEDIMENT CONTROL SUMMARY

KEYED NOTE	STATION	TO	STATION	RT/LT	603150 SOIL RETENTION BLANKET (UNIT I) SQ.YD.	603260 CULVERT PROTECTION (UNIT I) SQ.YD.	603262 COMPOSTED MULCH SOCK (UNIT I) LIN.FT.	603281 SWPPP PLAN PREPARATION AND MAINTENANCE (UNIT I) L.S.	603281 SWPPP PLAN PREPARATION AND MAINTENANCE (UNIT II) L.S.	REMARKS
								1	1	
	74+56.00		200+80.00	LT	94					
	39+99.00		103+12.00	RT-LT			450			
	200+00.00		216+81.00	RT-LT						
DP4-3	73+25.00					13				
DP4-5	95+70.00					13				
DP4B-1	202+15.00					13				
				SUBTOTAL	94	40	450	1	1	
				PROJECT USE	94	40	450	1	1	

PETER J. LORIS NEW MEXICO 19400 7/31/2018 PROFESSIONAL ENGINEER

Print Date: Jul 31, 2018	Sheet Revisions			
File Name: 12126 (04-06) SAQ (Seg4).dwg	Date:	Comments	Init.	
Horiz. Scale: Vert. Scale: As Noted				
Unit Information Unit Leader Initials				

Loris A DIVISION OF OTAK

SANTA FE COUNTY

As Constructed	ARROYO HONDO TRAIL MISCELLANEOUS QUANTITIES		Project No./Code
No Revisions:			Arroyo Hondo Trail
Revised:	Designer: SJB	Structure Numbers	325-12126
Void:	Detailer: LX		
	Sheet Subset: SQ-02	Subset Sheets: 3	5

G:\72 Clients\325 - Santa Fe County-NM\12126 - Arroyo Hondo Trail\50 DWG\Segment 4\12126 (04-06) SAQ (Seg4).dwg Jul 31, 2018 - 11:20am

SEEDING SUMMARY - UNIT I

STATION	TO	STATION	RT/LT	632000 CLASS A SEEDING L.F.	AVG. WIDTH (FT)	SQ.FT	632030 CLASS D SEEDING L.F.	AVG. WIDTH (FT)	SQ.FT	REMARKS
40+00.00		41+96.00	RT-LT	196	20	3,920			0	
42+33.00		64+68.00	RT-LT	2,235	20	44,700			0	
65+80.00		74+50.00	RT-LT	870	20	17,400			0	
74+50.00		75+20.00	RT-LT	70	10	700	70	20	1,400	SOIL RETENSION BLANKET AT 2:1 SLOPE
75+20.00		102+46.00	RT-LT	2,726	20	54,520			0	
200+00.00		200+85.00	RT-LT	85	10	850	85	20	1,700	SOIL RETENSION BLANKET AT 2:1 SLOPE
200+85.00		211+61.00		1,076	20	21,520				
211+87.00		216+24.81	RT-LT	438	20	8,756			0	
41+50.00		43+50.00	RT	200	50	10,000				ADDITIONAL DISTURBED AREA AT BRIDGE 1
					SQ.FT	162,366		SQ.FT	3,100	
		SUBTOTAL			ACRES	3.727		ACRES	0.071	
		PROJECT USE				3.73			0.07	

MISCELLANEOUS LANDSCAPING ITEM SUMMARY

KEYED NOTE	STATION	TO	STATION	RT/LT	667205 COBBLE SWALE SQ.FT.	667206 LANDSCAPE BOULDERS EACH	667219 GRAVITY WALL SQ.FT.	667500 BOLLARD EACH	667515 LITTER RECEPTACLE EACH	REMARKS
	65+55.00		66+05.00	LT			159			WALL A
	68+93.00		69+40.00	LT			141			WALL B
	69+77.00		70+64.00	LT			261			WALL C
	73+25.00			RT-LT			88			DP4-3
	95+70.00			RT-LT			88			DP4-5
	40+00.00					16			1	
	202+15.00			RT-LT			88			DP4B-1
	211+75.00							1		
	216+45.00							1		
			SUBTOTAL		0	16	825	2	1	
			PROJECT USE		0	16	825	2	1	

TRAFFIC SIGNS AND PAVEMENT MARKING SUMMARY - UNIT I

KEYED NOTE	STATION	RT/LT	701000 PANEL SIGNS SQ.FT.	701101 MULTI-DIRECTIONAL SLIP BASE POST FOR ALUMINUM PANEL SIGNS EACH	701960 STEEL POSTS FOR TRAIL SIGNS LIN.FT.	701961 VEHICULAR MONUMENT SIGN EACH	701962 KIOSK SIGN - PRIMARY EACH	701963 KIOSK SIGN - SECONDARY EACH	701964 ORIENTATION MAP SIGN EACH	701965 DIRECTIONAL SIGN - 1 FLAG EACH	701966 DIRECTIONAL SIGN - 2 FLAG EACH	701967 DIRECTIONAL SIGN - 3 FLAG EACH	701968 MARKER SIGN EACH	704000 RETROREFLECTORIZED PAVEMENT MARKINGS 4" LIN.FT.	704224 RETROREFLECTORIZED PLASTIC PAVEMENT STRIPE 24" LIN.FT.	REMARKS
	40+05.00		4.0		8											R5-3
	204+40.00		2.3		8											W7-5
	211+58.00		11.0	1												W11-55, W16-7L
	211+90.00		11.0	1												W11-55, W16-7L
	211+12.00		4.5		8											W2-1, W16-9P
	212+40.00		4.5		8											W2-1, W16-9P
	211+60.00		11.3	1												W11-55, W16-9P
	211+90.00		4.0		8											R5-3
	211+50.00		4.0		8											R5-3
	211+90.00		11.3	1												W11-55, W16-9P
															50.00	CROSS WALK
	74+60.00													50		TRAIL INTERSECTION APPROACH
	75+30.00													50		TRAIL INTERSECTION APPROACH
	200+07.08													412		STEEP SLOPE AND CURVE
	211+08.00													50		ROADWAY CROSSING APPROACH
	211+88.00													50		ROADWAY CROSSING APPROACH
	211+50.00													60		BOLLARD
	216+20.00													60		BOLLARD
	37+85.00	LT				1										V-10-1
	40+05.00	RT					1									K-10-2
	41+90.00	LT										1				D-10-3
	61+70.00	RT							1							O-11-1
	75+15.00	RT										1				D-12-1
	103+12.00	RT						1								K-14-1
	211+70.00	RT											1			M-13-5
	212+00.00	LT											1			M-13-4
	212+40.00	RT								1						D-13-3
	SUBTOTAL		68	4	48	1	1	1	1	1	0	2	2	732	50	
	PROJECT USE		68	4	48	1	1	1	1	1	0	2	2	732	50	

LUMP SUM ITEMS - UNIT I

SPEC NO	ITEM	UNIT	QUANTITY	REMARKS
201000	CLEARING AND GRUBBING	L.S.	1	
601000	REMOVAL OF STRUCTURES AND OBSTRUCTIONS	L.S.	1	
621000	MOBILIZATION	L.S.	1	
702810	TRAFFIC CONTROL DEVICES FOR CONSTRUCTION	L.S.	1	FOR SITE ACCESS AND STRIPING OF OLD DINSAUR CROSSING
801000	CONSTRUCTION STAKING BY THE CONTRACTOR	L.S.	1	

LUMP SUM ITEMS - UNIT II

SPEC NO	ITEM	UNIT	QUANTITY	REMARKS
201000	CLEARING AND GRUBBING	L.S.	1	
621000	MOBILIZATION	L.S.	1	
801000	CONSTRUCTION STAKING BY THE CONTRACTOR	L.S.	1	

SEEDING SUMMARY - UNIT II

STATION	TO	STATION	RT/LT	632000 CLASS A SEEDING L.F.	AVG. WIDTH (FT)	SQ.FT	REMARKS
216+24.81		216+81.48	RT-LT	57	20	1,133	
				0	20	0	
				0	20	0	
				0	20	0	
				0	20	0	
				0		0	
					SQ.FT	1,133	
		SUBTOTAL			ACRES	0.026	
		PROJECT USE				0.03	

TRAFFIC SIGNS AND PAVEMENT MARKING SUMMARY - UNIT II

KEYED NOTE	STATION	RT/LT	701000 PANEL SIGNS SQ.FT.	701101 MULTI-DIRECTIONAL SLIP BASE POST FOR ALUMINUM PANEL SIGNS EACH	701960 STEEL POSTS FOR TRAIL SIGNS LIN.FT.	701961 VEHICULAR MONUMENT SIGN EACH	701962 KIOSK SIGN - PRIMARY EACH	701963 KIOSK SIGN - SECONDARY EACH	701964 ORIENTATION MAP SIGN EACH	701965 DIRECTIONAL SIGN - 1 FLAG EACH	701966 DIRECTIONAL SIGN - 2 FLAG EACH	701967 DIRECTIONAL SIGN - 3 FLAG EACH	701968 MARKER SIGN EACH	704000 RETROREFLECTORIZED PAVEMENT MARKINGS 4" LIN.FT.	704224 RETROREFLECTORIZED PLASTIC PAVEMENT STRIPE 24" LIN.FT.	REMARKS
	216+85.00	RT										1				D-13-2
	216+85.00	LT						1								K-13-1
	SUBTOTAL		0	0	0	0	0	1	0	0	0	1	0	0	0	
	PROJECT USE		0	0	0	0	0	1	0	0	0	1	0	0	0	

PETER J. LORIS NEW MEXICO 19400 7/31/2018 PROFESSIONAL ENGINEER

Print Date: Jul 31, 2018
File Name: 12126 (04-06) SAQ (Seg4).dwg
Horiz. Scale: Vert. Scale: As Noted
Unit Information Unit Leader Initials

Sheet Revisions

Date:	Comments	Init.

Loris A DIVISION OF OTAK

SANTA FE COUNTY

As Constructed
No Revisions:
Revised:
Void:

ARROYO HONDO TRAIL
MISCELLANEOUS QUANTITIES

Designer: SJB
Detailer: LX
Sheet Subset: SQ-03
Structure Numbers
Subset Sheets: 3

Project No./Code
Arroyo Hondo Trail
325-12126
6

G:\7.2 Clients\325 - Santa Fe County-NM\12126 - Arroyo Hondo Trail\50 DWG\Segment 4\12126 (04-06) SAQ (Seg4).dwg Jul 31, 2018 - 11:20am

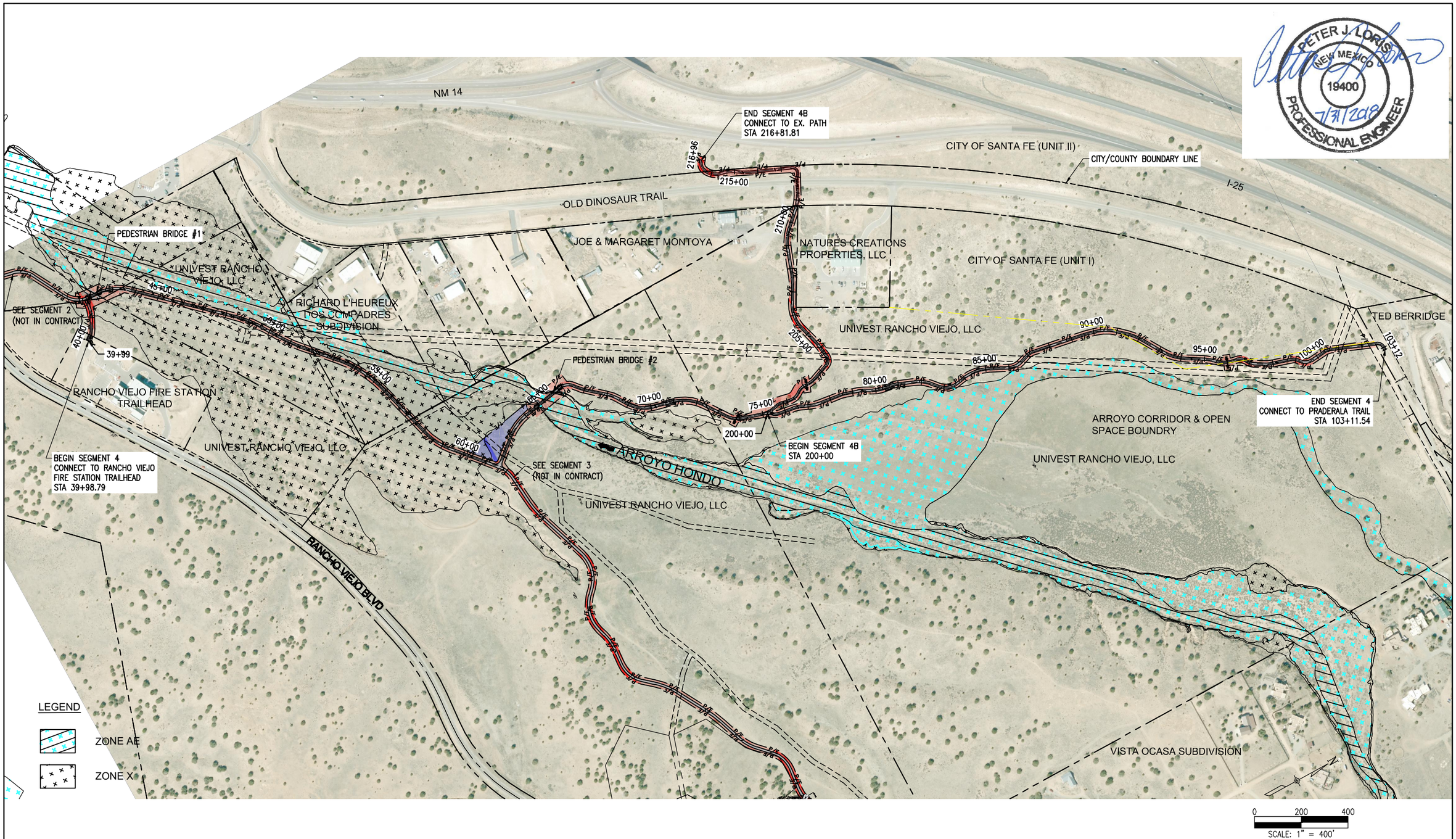

PETER J. LORIS
NEW MEXICO
19400
PROFESSIONAL ENGINEER
7/31/2018

G:\7.2 Clients\325 – Santa Fe County–NM\12126 – Arroyo Hondo Trail\50 DWG\Segment 4\12126 (07) Overall Site plan (Seg4).dwg Jul 31, 2018 – 11:21am

Print Date: Jul 31, 2018	Sheet Revisions		
File Name: 12126 (07) Overall Site plan (Seg4).dwg	Date:	Comments	Init.
Horiz. Scale: Vert. Scale: As Noted			
Unit Information Unit Leader Initials			

Loris
A DIVISION OF OTAK

SANTA FE COUNTY

As Constructed				
No Revisions:				
Revised:	Designer: SJB	Structure Numbers		
	Detailer: LX			
Void:	Sheet Subset: OS-01	Subset Sheets: 1		

ARROYO HONDO TRAIL
OVERALL SITE PLAN

Project No./Code
Arroyo Hondo Trail
325–12126
7

ENVIRONMENTAL COMMITMENTS

THE CONTRACTOR SHALL REFER TO SECTION 107 OF THE 2014 EDITION OF THE STANDARD SPECIFICATIONS, MAKING SPECIALS NOTE OF SUB-SECTION 107.14 "CONTRACTOR'S RESPONSIBILITIES FOR ENVIRONMENTAL AND CULTURAL RESOURCE PROTECTION".

☐ NO ADDITIONAL PROJECT-SPECIFIC ENVIRONMENTAL REQUIREMENTS APPLY.

☒ IN ADDITION TO 107, THE FOLLOWING PROJECT SPECIFIC ENVIRONMENTAL REQUIREMENT APPLY:

1. HISTORIC PROPERTIES: IF PREVIOUSLY UNDOCUMENTED PREHISTORIC OR HISTORIC PROPERTIES ARE IDENTIFIED DURING CONSTRUCTION, ALL GROUND-DISTURBING ACTIVITIES WITHIN 100 FEET OF THE MATERIALS SHALL IMMEDIATELY CEASE AND MEASURES SHALL BE TAKEN TO PROTECT THE CULTURAL RESOURCES. THE PROJECT PROPONENT AND/OR THE CONTRACTOR SHALL IMMEDIATELY CONTACT STEVEN LAKATOS, NMDOT ENVIRONMENTAL BUREAU, AT (505) 827-5513 AND BY EMAIL AT STEVEN.LAKATOS@STATE.NM.US. AND ENSURE THAT ALL CONSTRUCTION IN THE AREA HAS CEASED.

2. MIGRATORY BIRD TREATY ACT COMPLIANCE: THE CONTRACTOR SHALL AT ALL TIMES COMPLY WITH THE MIGRATORY BIRD TREATY ACT, WHICH PROHIBITS POSSESSION, CAPTURE, OR KILLING OF ANY MIGRATORY BIRD, EGG, OR OCCUPIED NEST. IF OCCUPIED NESTS (I.E., CONTAINING EGGS OR JUVENILE BIRDS) ARE PRESENT DURING CONSTRUCTION, THE PARENTAL BIRDS AND THEIR NESTS MUST BE AVOIDED UNTIL JUVENILE BIRDS HAVE FLEDGED AND FLOWN AWAY FROM NESTS. OCCUPIED NESTS CANNOT BE DISTURBED OR RELOCATED WITHOUT A UNITED STATES FISH AND WILDLIFE SERVICE (USFWS) PERMIT. ANY COST OR SUSPENSION OF WORK CAUSED BY NEST AVOIDANCE, USFWS PERMITTING, OR USFWS PERMIT DENIAL, SHALL BE AT THE CONTRACTOR'S EXPENSE. PRIOR TO THE SEASONAL ONSET OF BIRD NESTING ACTIVITY, THE CONTRACTOR MAY ELECT TO INSTALL AND MAINTAIN BIRD EXCLUSION MEASURES SUCH AS BIRD NETTING, OR PERFORM DAILY MONITORING AND REMOVAL OF NESTING ATTEMPTS BEFORE EGG-LAYING OCCURS, TO PREVENT ESTABLISHMENT OF OCCUPIED NESTS. IN CASES WHERE THE PROJECT PROPONENT ELECTS TO INITIATE NEST PREVENTION MEASURES PRIOR TO CONTRACTOR MOBILIZATION, THE COSTS AND EFFECTIVENESS OF NEST PREVENTION MEASURES SHALL BECOME THE RESPONSIBILITY OF THE CONTRACTOR UPON THE DATE OF MOBILIZATION.

3. WATER RESOURCES MITIGATION MEASURES: A STORM WATER POLLUTION PREVENTION PLAN (SWPPP) IS REQUIRED TO PREVENT INDIRECT IMPACTS IN THE FORM OF SEDIMENT AND CHEMICAL COMPOUND RUNOFF ENTERING THE ADJACENT ARROYO HONDO AND CANADA DEL RANCHO, IMPACTING DOWNSTREAM HABITAT

4. THE FOLLOWING ENVIRONMENTAL RECOMMENDATIONS ARE SUGGESTED TO BE INCLUDED IN THE FINAL CONSTRUCTION PLANS FOR THE PROJECT:

5. BIOLOGICAL COMMUNITY MITIGATION MEASURES: BEST MANAGEMENT SHALL BE USED TO REDUCE THE SPREAD OF NOXIOUS WEEDS TO OTHER AREAS VIA EQUIPMENT, VEHICLES, AND CLOTHING.

R Blake Sullivan — 4-5-18

ENVIRONMENTAL PROGRAM MANAGER, NEW MEXICO DEPARTMENT OF TRANSPORTATION — DATE

Print Date: Mar 13, 2018	Sheet Revisions			
File Name: 12126 (X) Env Notes.dwg	Date:	Comments	Init.	
Horiz. Scale: Vert. Scale: As Noted				
Unit Information Unit Leader Initials				

Loris — A DIVISION OF OTAK

SANTA FE COUNTY

As Constructed	ARROYO HONDO TRAIL ENVIRONMENTAL NOTES			Project No./Code
No Revisions:				Arroyo Hondo Trail
Revised:	Designer: SJB	Structure Numbers		325-12126
	Detailer: LX			
Void:	Sheet Subset: GN-03	Subset Sheets: 3		

G:\7.2 Clients\325 - Santa Fe County-NM\12126 - Arroyo Hondo Trail\50 DWG\Segment 4\12126 (X) Env Notes.dwg Mar 13, 2018 - 2:26pm

Typical Section Stationing Seg 4			
Station to Station			Typical Section #
39+99	to	41+98	S1
41+98	to	42+33	BRIDGE
42+33	to	64+64	S1
64+64	to	65+74	BRIDGE
65+76	to	66+20	S2
66+20	to	68+85	S1
68+85	to	69+35	S2
69+35	to	69+80	21
69+85	to	70+60	S2
70+60	to	74+02	S1
74+02	to	75+20	S3
75+20	to	103+11	S1

Typical Section Stationing Seg 4B			
Station to Station			Typical Section #
200+07	to	200+80	S3
200+80	to	211+61	S1
211+61	to	211+86	*
211+86	to	216+81	S1

* NO-WORK SECTION ACROSS DINOSAUR TRAIL

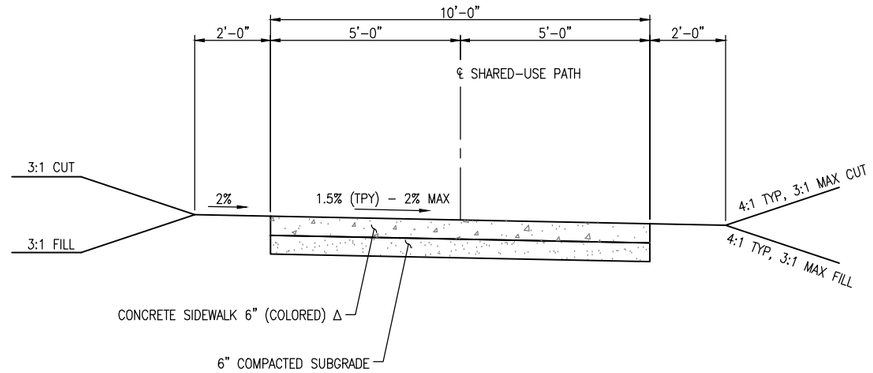

TYPICAL SECTION S1

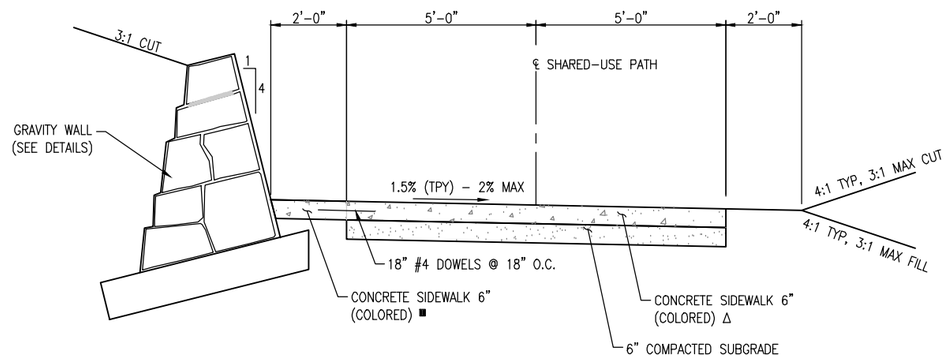

TYPICAL SECTION S2

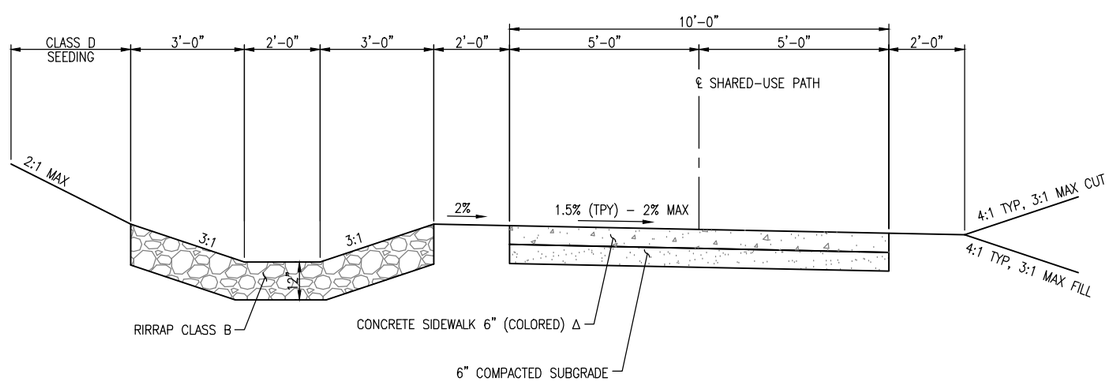

TYPICAL SECTION S3

NOTE:

Δ CONCRETE COLOR SHALL BE DAVIS COLORS 5084-OMAHA TAN, INTEGRAL COLOR MIXED IN THE PLANT ACCORDING TO THE MANUFACTURER'S RECOMMENDATION.

■ CONCRETE COLOR SHALL BE DAVIS COLORS 160 RED BRICK, INTEGRAL COLOR MIXED IN THE PLANT ACCORDING TO THE MANUFACTURER'S RECOMMENDATION.

Print Date: Jul 31, 2018	Sheet Revisions			As Constructed	ARROYO HONDO TRAIL TYPICAL SECTIONS	Project No./Code
File Name: 12126 (09) Typical Sections (Seg4).dwg	Date:	Comments	Init.	No Revisions:		Arroyo Hondo Trail
Horiz. Scale: Vert. Scale: As Noted				Revised:	Designer: SJB / Structure Numbers	325-12126
Unit Information Unit Leader Initials				Void:	Detailer: LX / Sheet Subset: TS-01 / Subset Sheets: 1	9

Loris A DIVISION OF OTAK

SANTA FE COUNTY

G:\7.2 Clients\325 - Santa Fe County-NM\12126 - Arroyo Hondo Trail\50 DWG\Segment 4\12126 (09) Typical Sections (Seg4).dwg Jul 31, 2018 - 11:21am

STORM WATER POLLUTION PREVENTION PLAN INFORMATION

NOI INPUTS CN 5100560	
NMDOT PROJECTS REQUIRE ELECTRONIC NOI SUBMISSION-PAPER SUBMISSION REQUIRES PRIOR APPROVAL.	
NMR120000 STATE OF NEW MEXICO, EXCEPT INDIAN COUNTRY NMR120001 INDIAN COUNTRY WITHIN THE STATE OF NEW MEXICO, EXCEPT NAVAJO RESERVATION LANDS THAT ARE COVERED UNDER ARIZONA PERMIT AZ100001 AND UTE MOUNTAIN RESERVATION LANDS THAT ARE COVERED UNDER COLORADO PERMIT COR100001.	
OPERATOR NAME: SANTA FE COUNTY	
POINT OF CONTACT: SANTA FE COUNTY PROJECT MANAGER	
NOI PREPARED BY: SANTA FE COUNTY PROJECT MANAGER	
PROJECT / SITE NAME: ARROYO HONDO TRAIL SEGMENT 4	
PROJECT / SITE ADDRESS: SANTA FE COUNTY	
LATITUDE:	35.6011 DECIMAL DEGREES
LONGITUDE:	-106.0311 DECIMAL DEGREES
ESTIMATED PROJECT START DATE:	TO BE DETERMINED BY PROJECT MANAGER
ESTIMATED PROJECT COMPLETION DATE:	TO BE DETERMINED BY PROJECT MANAGER
ESTIMATED AREA TO BE DISTURBED (NEAREST 1/4 ACRE):	5.50 ACRES
TYPE OF CONSTRUCTION	TRAIL
DEMOLITION OF ANY STRUCTURES, 10,0000 SQUARE FEET OR GREATER BUILT OR RENOVATED BEFORE JANUARY 1, 1980? (YES/NO)	NO
WAS THE PREDEVELOPMENT LAND USE FOR AGRICULTURE? (YES/NO)	NO
COMMENCED EARTH-DISTURBING ACTIVITIES?:	NO
PREVIOUS NPDES PERMIT? IF YES, PERMIT NO:	NO
MUNICIPAL SEPARATE STORM SEWER SYSTEM (MS4): (NAME)	SEE THIS SHEET FOR MS4 LOCATIONS
SURFACE WATERS WITHIN 50 FT? (YES\NO)	YES
RECEIVING WATER:	ARROYO HONDO
IMPAIRED WATERS: SEE MAP FOR 303D LISTING TMDL LISTINGS ON THIS SWPPP INFORMATION SHEET. CHECK SPECIFIC TMDL LIST HERE: NO HTTPS://WWW.ENV.NM.GOV/SWQB/303D-305B/2014-2016/2014-2016NMLIST.PDF	
IMPAIRED WATERS METHOD: ONLINE CONSULTATION OF NEW MEXICO ENVIRONMENT DEPARTMENT LISTING OF STATEWIDE 303D AND TMDL IMPAIRMENTS. TMDL: PLANT NUTIENTS	
TIER 2, TIER 2.5, TIER 3 WATERS - (CONSULT 2017 CGP APPENDIX "F"): TIER 2	
CHEMICAL TREATMENT INFORMATION - TYPICAL SANTA FE COUNTY PROJECT WILL NOT UTILIZE THESE CHEMICALS.	
SWPPP CONTACT INFORMATION - SANTA FE COUNTY PROJECT MANAGER	
ENDANGERED SPECIES CRITERIA - (A, B, C, D, E, OR F):D BRIEF SUMMARY FOR THE BASIS FOR CRITERION SELECTION: May effect, not likely to adversely effect	
HISTORIC PRESERVATION - HISTORIC PROPERTIES WILL NOT BE IMPACTED. THE ENVIRONMENTAL COMMITTMENTS WILL INDICATE EXISTENCE OF HISTORIC PROPERTIES. IF HISTORIC PROPERTIES EXIST, THE TESCP SHEETS CAN SHOW NO EFFECT ON HISTORIC PROPERTIES. ALL STORMWATER CONTROLS REQUIRE SUBSURFACE DISTURBANCE.	
CERTIFICATION:NOI MUST BE CERTIFIED BY "A PRINCIPAL EXECUTIVE OFFICER OR RANKING ELECTED OFFICIAL".	

GENERAL NOTES:

1. THE 2012 EDITION OF NMDOT NATIONAL POLLUTANT DISCHARGE ELIMINATION SYSTEM (NPDES) HANDBOOK AND SECTION 603 - TEMPORARY EROSION AND SEDIMENT CONTROL OF THE 2014 NEW MEXICO DEPARTMENT OF TRANSPORTATION STANDARD SPECIFICATIONS FOR HIGHWAY AND BRIDGE CONSTRUCTION - SHALL BE USED AS MINIMUM REQUIREMENTS TO DEVELOP OR MODIFY THE STORM WATER POLLUTION PREVENTION PLAN (SWPPP).
2. THE NPDES PERMIT NUMBER FOR THE PROJECT OR A COPY OF THE NOTICE OF INTENT (NOI), IF A PERMIT NUMBER HAS NOT YET BEEN ASSIGNED, SHALL BE POSTED AT THE PROJECT SITE OR THE FIELD OFFICE AT ALL TIMES DURING CONSTRUCTION.
3. THE STORM WATER POLLUTION PREVENTION PLAN (SWPPP) AND ALL MAINTENANCE AND INSPECTION REPORTS SHALL BE SIGNED BY A QUALIFIED INSPECTOR ASSIGNED BY CONTRACTOR. THE SWPPP AND THE INSPECTION REPORTS SHALL BE AVAILABLE TO EPA REPRESENTATIVE AT ALL TIMES DURING CONSTRUCTION.
4. ALL DRAINAGE INFORMATION NEEDED TO COMPLETE THE NOTICE OF INTENT (NOI) ARE PROVIDED IN THIS PLAN.
5. BMPS SHOWN ON TESCP ARE DETERMINED USING THE EQUATIONS SHOWN ON THIS SHEET AND OTHER HYDROLOGIC MODELS AS SPECIFIED IN THE DEPARTMENTS DRAINAGE MANUALS LATEST EDITION. BMPS CONTROL SEDIMENT SO THAT NO ADDITIONAL SEDIMENT RESULTING FROM CONSTRUCTION ACTIVITIES DISCHARGE TO WATERWAYS.
6. THE CONTRACTOR SHALL SPECIFICALLY DEFINE ALL REQUIRED CONTROL MEASURES FOR EACH CONSTRUCTION PHASE, AND SHALL COMPLY WITH THE PROVISIONS OF THE NPDES MANUAL AND THE 2012 CONSTRUCTION GENERAL PERMIT.
7. THE TESCP SHEETS INCLUDED IN THE FOLLOWING PAGES OF THESE PLANS PROVIDE A BASIS FOR ESTIMATING QUANTITIES.

RUNOFF DISCHARGE & VOLUME CALCULATION:

THE FOLLOWING PROCEDURES SHOULD BE USED TO CALCULATE THE RUNOFF
DISHARGE AND VOLUME TO DESIGN THE EROSION CONTROL MEASURES:

DISCHARGE: $Q = CIA$
WHERE:
Q = DISCHARGE, cfs
C = RUNOFF COEFFICIENT
I = RAINFALL INTENSITY, in/hr
A = AREA OF THE SITE, acres

VOLUME: $V = QT_C$
WHERE:
V = VOLUME, ft^3
$T_C = (1/60)\ 0.0078\ L^{.077}\ S^{-0.385}$ minutes
Assume T_C = 10 min. for basins within the project limits
L = LENGTH OF WATERSHED, ft
S = SLOPE, ft / ft

SWPPP INPUTS	
DRAINAGE PATTERNS	REFER TO TESCP
APPROXIMATE SLOPES AFTER MAJOR GRADING	4H:1V
RAINFALL 2-YEAR, 24-HOUR, inch	1.52 INCHES
2-YEAR, 1-HOUR, inch	0.798 INCHES
INTENSITY, FOR Tc = 10 minutes	2.34 INCH/HOUR
HYDROLOGICAL SOIL GROUP	A, B, C
CURVE NUMBER (CN), UNDISTURBED AREA	75
CURVE NUMBER (CN), DISTURBED AREA	91
RUNOFF COEFFICIENT, PRIOR TO CONSTRUCTION	0.72
RUNOFF COEFFICIENT, DURING CONSTRUCTION	0.72
RUNOFF COEFFICIENT, AFTER CONSTRUCTION	0.90

Info: RUSLE2 version 2.6.10.3 April 5, 2018

Inputs:

Project Name	Location
Sant Fe County Arroyo Hondo Trai	USA\New Mexico\Santa Fe County\NM_Santa Fe_R13

Soil Segments:

Segment	Seg length (horiz), ft	Soil
1	10	201 Tanoan-Encantado complex, 5-25 percent slopes\Tanoan Gravelly sandy loam

Slope Segments:

Segment	Seg length (horiz), ft	Steepness, xH:1V
1	10	4

Outputs:

Base management	Soil loss erod. Portion, t/ac/yr	Soil detachment, t/ac/yr	Sed. Delivery, t/ac/yr
MDOT Zone 2\Existing Undisturbed Vegetative Cover\Grass and Shrubs existing 45 pct cano	0.1	0.1	0.1
Class A slopes 3:1 and flatter-drilled seeding with mulch\Spring Drilled seeding, 4000 lb	0.01	0.01	0.01
Class A slopes 3:1 and flatter-drilled seeding with mulch\Summer Drilled seeding, 4000 lb	0.2	0.2	0.2
Class A slopes 3:1 and flatter-drilled seeding with mulch\Fall Drilled seeding, 4000 lb	0.2	0.02	0.2
Class A slopes 3:1 and flatter-drilled seeding with mulch\Winter Drilled seeding, 4000 lb	0.05	0.05	0.05

1 row of mulch sock was applied at top of slope

SMA
Souder, Miller & Associates
Engineering • Environmental • Surveying
www.soudermiller.com

100% PLANS - SEPTEMBER 08, 2017

P:\7-Santa Fe County Arroyo Hondo Trail (7426004)\CAD\7221862 CAD 2017\Plans\02Sheets\7221862 SWPPP.dwg Jul 24, 2018 - 3:29pm

Print Date: Jul 24, 2018	Sheet Revisions			As Constructed	ARROYO HONDO TRAIL SWPPP	Project No./Code
File Name: 7221862 SWPPP.dwg	Date:	Comments	Init.	No Revisions:		Arroyo Hondo Trail
Horiz. Scale: Vert. Scale: As Noted				Revised:	Designer: SFG / Structure Numbers	325-12126
Unit Information Unit Leader Initials				Void:	Detailer: SFG / Sheet Subset: EC-01 / Subset Sheets: 5	10

Loris and Associates, Inc.
100 Superior Plaza Way
Suite 220
Louisville, Colorado 80027
303.444.2073
www.LorisandAssociates.com

SANTA FE COUNTY

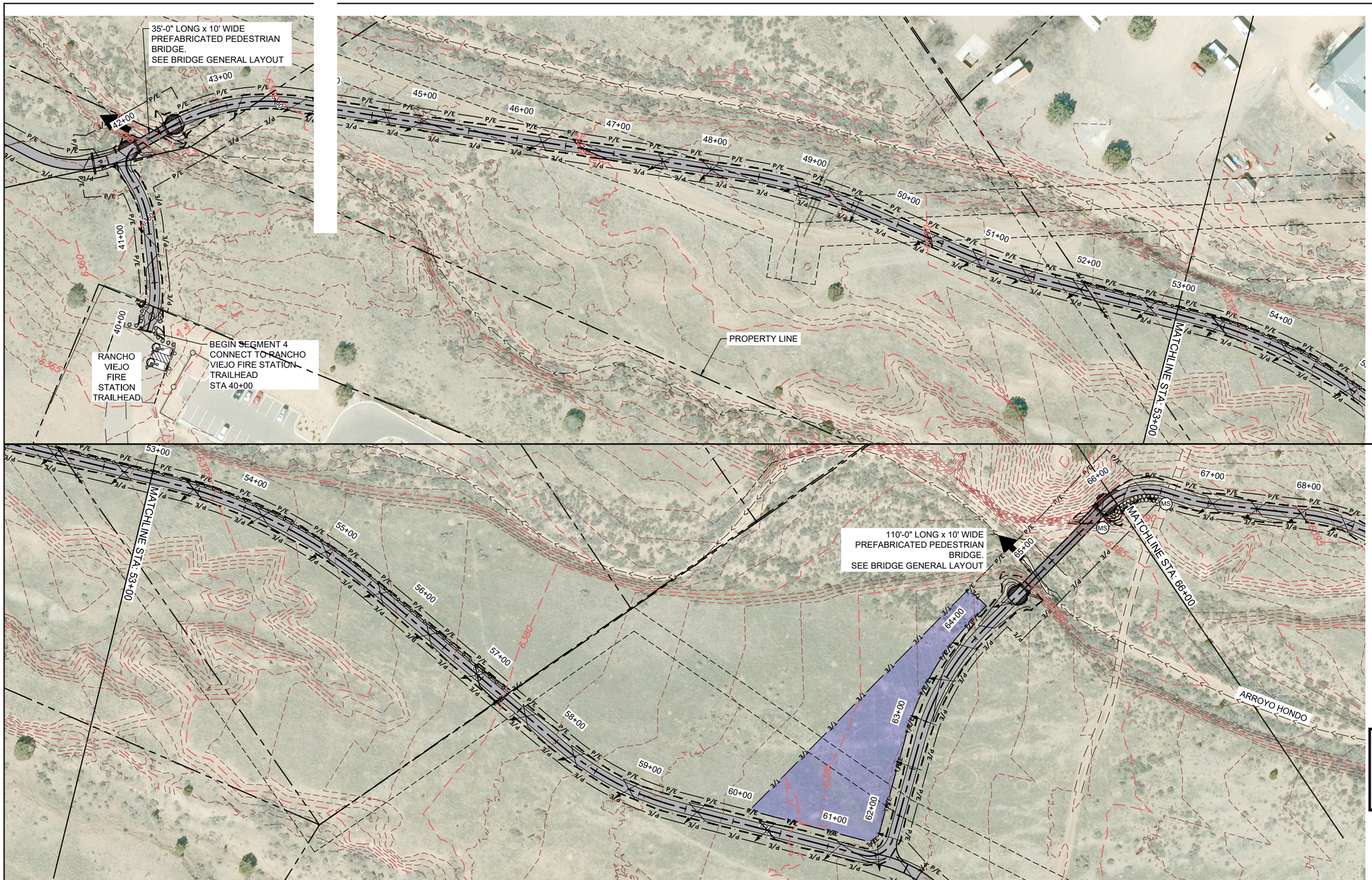

0 50 100
SCALE: 1" = 100'

0 50 100
SCALE: 1" = 100'

LEGEND

- DISCHARGE POINT
- CHANNELIZED FLOW
- FLOW DIRECTION
- COMPOSTED MULCH SOCK (MS)

SMA
Souder, Miller & Associates
Engineering • Environmental • Surveying
www.soudermiller.com

Print Date: Jul 19, 2018	Sheet Revisions	As Constructed	ARROYO HONDO TRAIL EROSION CONTROL PLAN (SEGMENT 4)
File Name: 7221862 TESCM (Seg 4)(100x).dwg	Date: / Comments / Init.	No Revisions:	
Horiz. Scale: / Vert. Scale: As Noted		Revised:	Designer: SFG / Structure Numbers
Unit Information / Unit Leader Initials		Void:	Detailer: SFG
			Sheet Subset: EC-02 / Subset Sheets: 5

Loris and Associates, Inc.
100 Superior Plaza Way
Suite 220
Louisville, Colorado 80027
303.444.2073
www.LorisandAssociates.com

SANTA FE COUNTY

Project No./Code
Arroyo Hondo Trail
325-12126
11

P:\7-Santa Fe County Arroyo Hondo Trail (7426004)\CAD\7221862 CAD 2017\Plans\02Sheets\7221862 TESCM (Seg 4)(100x).dwg Jul 19, 2018 - 4:08pm

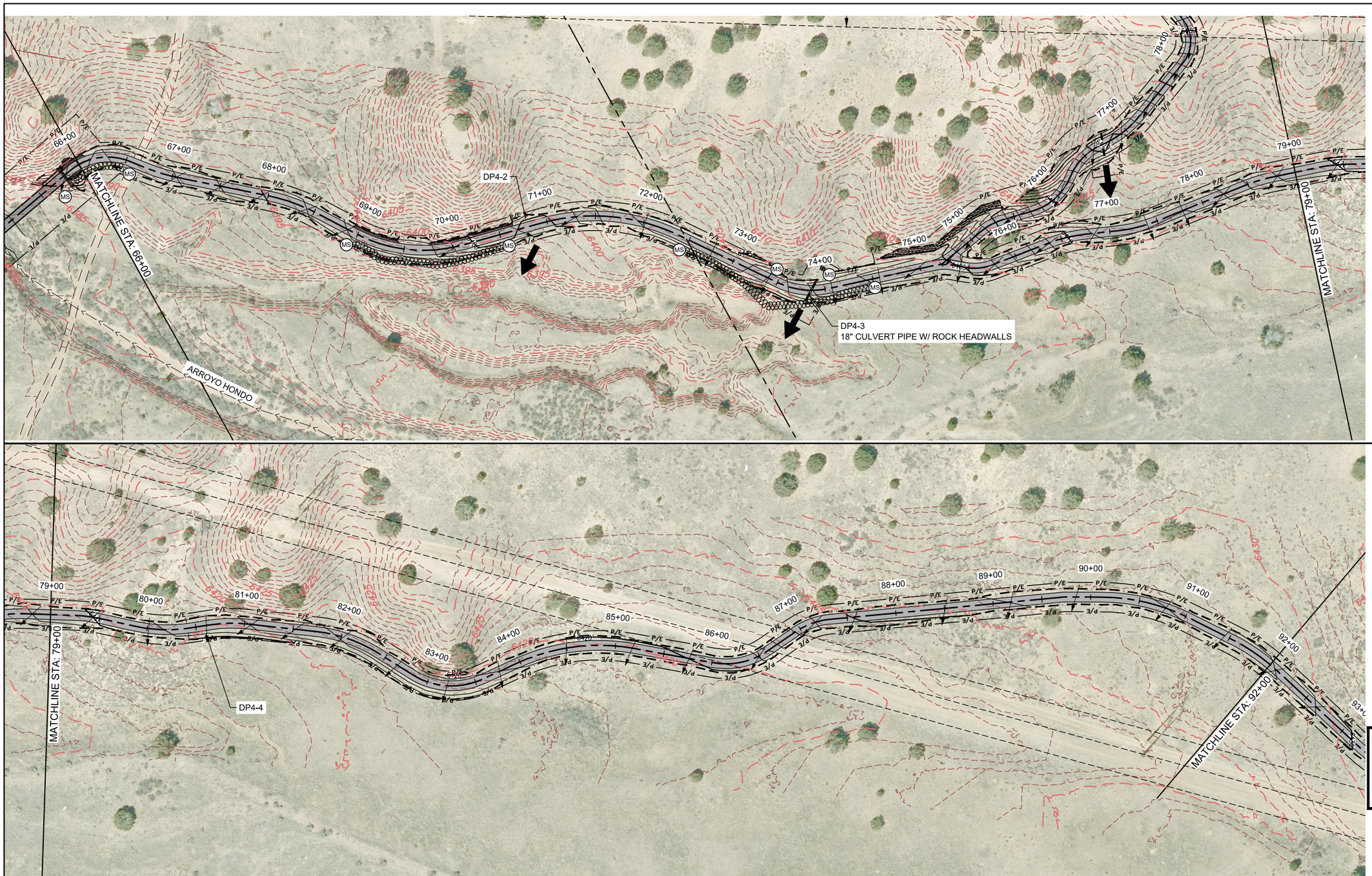

P:\7-Santa Fe County Arroyo Hondo Trail (7426004)\CAD\7221862 CAD 2017\Plans\02Sheets\7221862 TESCM (Seg 4)(100x).dwg Jul 19, 2018 - 4:09pm

Souder, Miller & Associates
Engineering • Environmental • Surveying
www.soudermiller.com

Print Date: Jul 19, 2018	Sheet Revisions		
File Name: 7221862 TESCM (Seg 4)(100x).dwg	Date:	Comments	Init.
Horiz. Scale: Vert. Scale: As Noted			
Unit Information Unit Leader Initials			

Loris and Associates, Inc.
100 Superior Plaza Way
Suite 220
Louisville, Colorado 80027
303.444.2073
www.LorisandAssociates.com

SANTA FE COUNTY

As Constructed	ARROYO HONDO TRAIL EROSION CONTROL PLAN (SEGMENT 4)		Project No./Code
No Revisions:			Arroyo Hondo Trail
Revised:	Designer: SFG	Structure Numbers	325-12126
Void:	Detailer: SFG		
	Sheet Subset: EC-03	Subset Sheets: 5	12

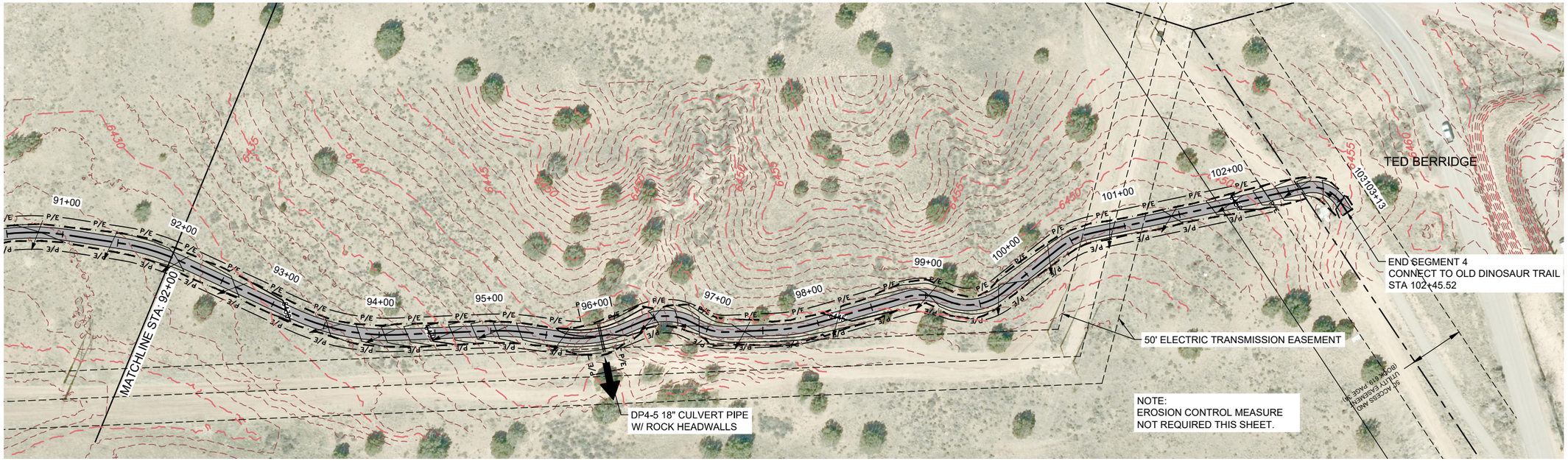

0 50 100
SCALE: 1" = 100'

LEGEND
DISCHARGE POINT
CHANNELIZED FLOW
FLOW DIRECTION
COMPOSTED MULCH SOCK

Souder, Miller & Associates
Engineering • Environmental • Surveying
www.soudermiller.com

Print Date: Jul 19, 2018	Sheet Revisions				
File Name: 7221862 TESCM (Seg 4)(100x).dwg	Date:	Comments	Init.		
Horiz. Scale: Vert. Scale: As Noted					
Unit Information Unit Leader Initials					

Loris and Associates, Inc.
100 Superior Plaza Way
Suite 220
Louisville, Colorado 80027
303.444.2073
www.LorisandAssociates.com

SANTA FE COUNTY

As Constructed
No Revisions:
Revised:
Void:

ARROYO HONDO TRAIL
EROSION CONTROL PLANS
(SEGMENT 4)

Designer:	SFG	Structure Numbers	
Detailer:	SFG		
Sheet Subset:	EC-04	Subset Sheets:	5

Project No./Code
Arroyo Hondo Trail
325-12126
13

P:\7-Santa Fe County Arroyo Hondo Trail (7426004)\CAD\7221862 CAD 2017\Plans\02Sheets\7221862 TESCM (Seg 4)(100x).dwg Jul 19, 2018 - 4:10pm

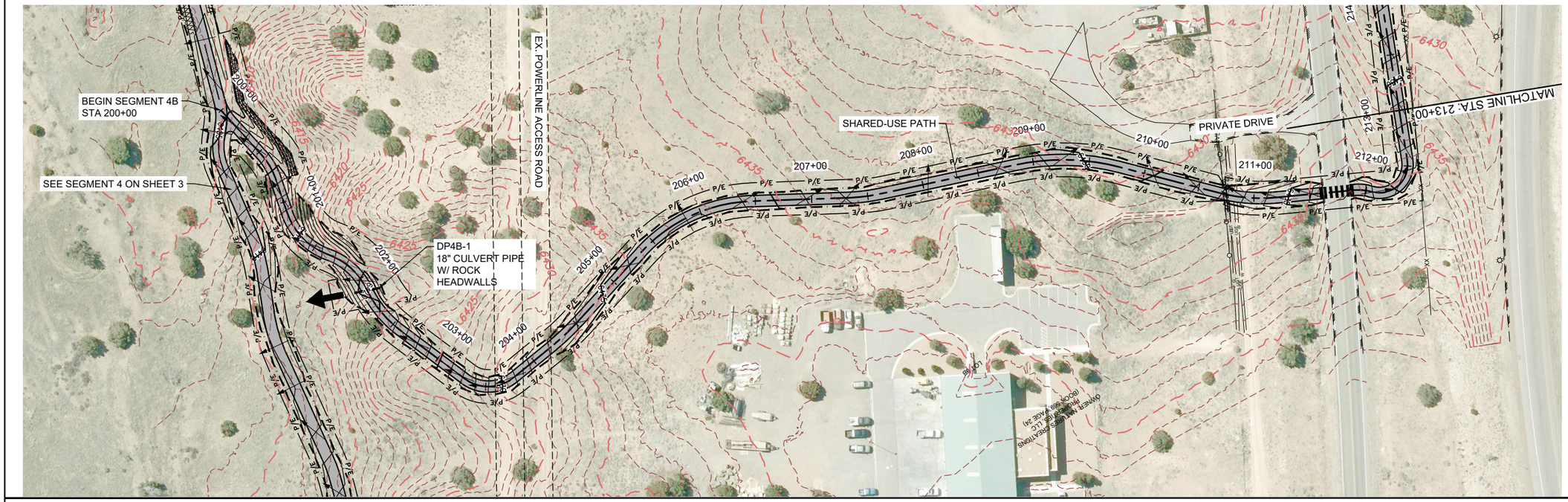

0 50 100
SCALE: 1" = 100'

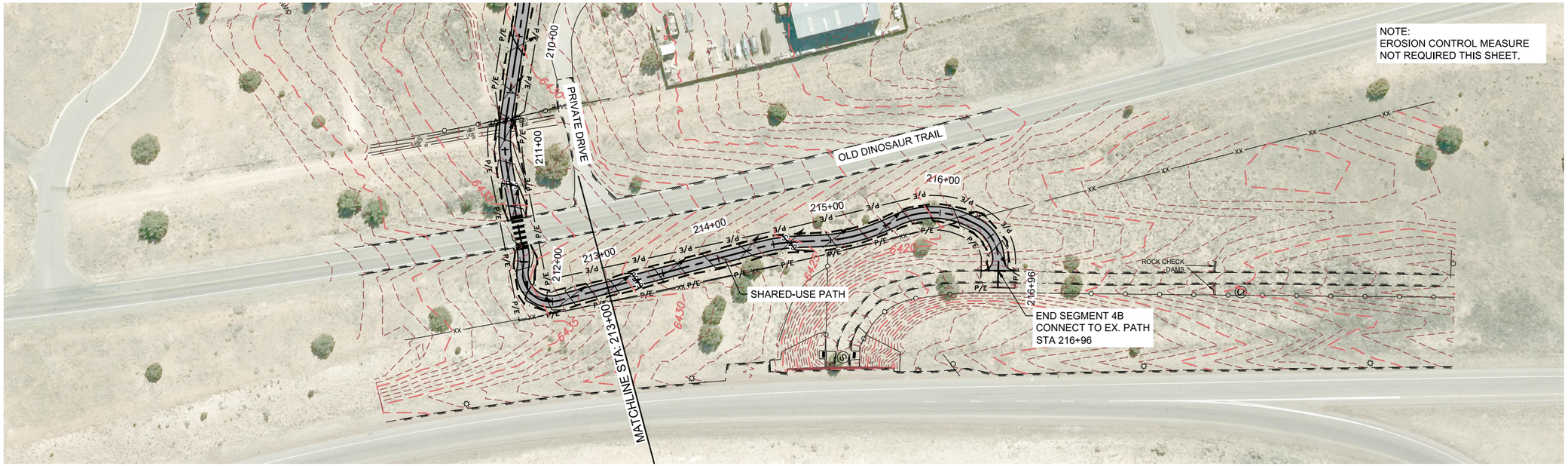

0 50 100
SCALE: 1" = 100'

LEGEND

- DISCHARGE POINT
- CHANNELIZED FLOW
- FLOW DIRECTION
- COMPOSTED MULCH SOCK (MS)

SMA
Souder, Miller & Associates
Engineering • Environmental • Surveying
www.soudermiller.com

Print Date: Jul 19, 2018	Sheet Revisions		
File Name: 7221862 TESCM (Seg4B)(100x).dwg	Date:	Comments	Init.
Horiz. Scale: Vert. Scale: As Noted			
Unit Information Unit Leader Initials			

Loris and Associates, Inc.
100 Superior Plaza Way
Suite 220
Louisville, Colorado 80027
303.444.2073
www.LorisandAssociates.com

SANTA FE COUNTY

As Constructed	ARROYO HONDO TRAIL EROSION CONTROL PLAN (SEGMENT 4B)		Project No./Code
No Revisions:			Arroyo Hondo Trail
Revised:	Designer: SFG	Structure Numbers	325–12126
	Detailer: SFG		
Void:	Sheet Subset: EC–05	Subset Sheets: 5	14

P:\7-Santa Fe County Arroyo Hondo Trail (7426004)\CAD\7221862 CAD 2017\Plans\02Zheets\7221862 TESCM (Seg4B)(100x).dwg Jul 19, 2018 - 4:04pm

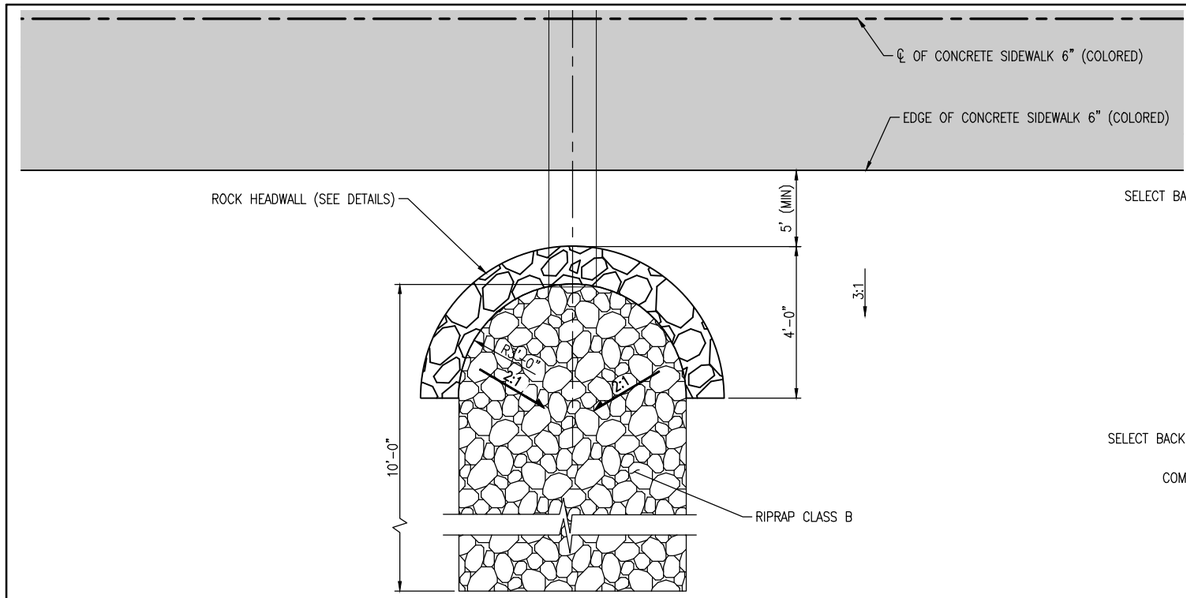

CULVERT ROCK HEADWALL PLAN
PERPENDICULAR LAYOUT
N.T.S.
NOTE: PAID FOR UNDER ITEM 667219-GRAVITY WALL

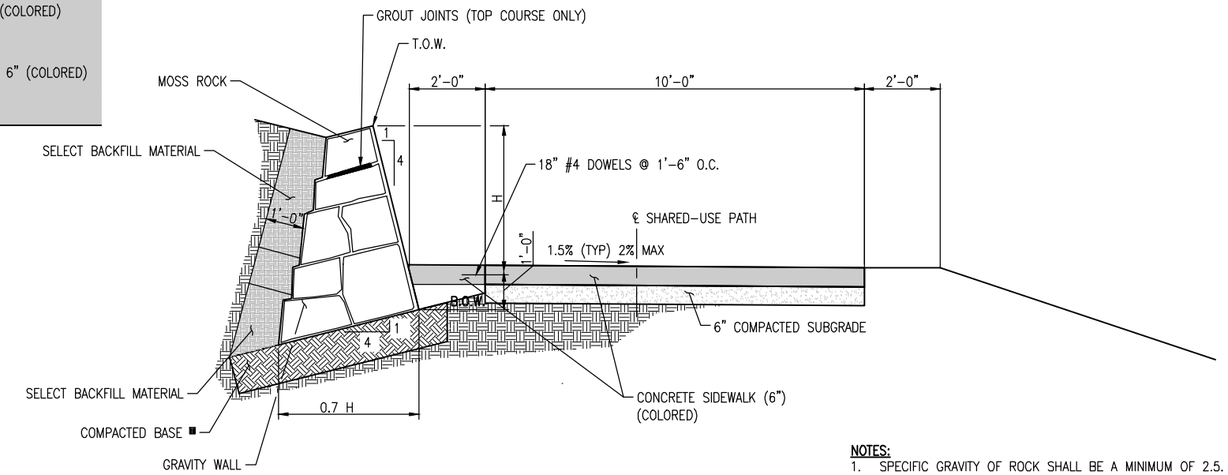

GRAVITY WALL
N.T.S.

NOTES:
1. SPECIFIC GRAVITY OF ROCK SHALL BE A MINIMUM OF 2.5.
2. BOTTOM ROCK FOR WALLS SHALL BE A MINIMUM OF 24" IN SIZE.
3. ■ = 2000 PSF MIN. BEARING CAPACITY
4. EXCAVATION INCLUDED IN UNCLASSIFIED EXCAVATION QUANTITIES. SELECT BACKFILL NOT MEASURED OR PAID FOR SEPARATELY BUT INCLUDED IN THE COST OF ITEM 667219 GRAVITY WALL.

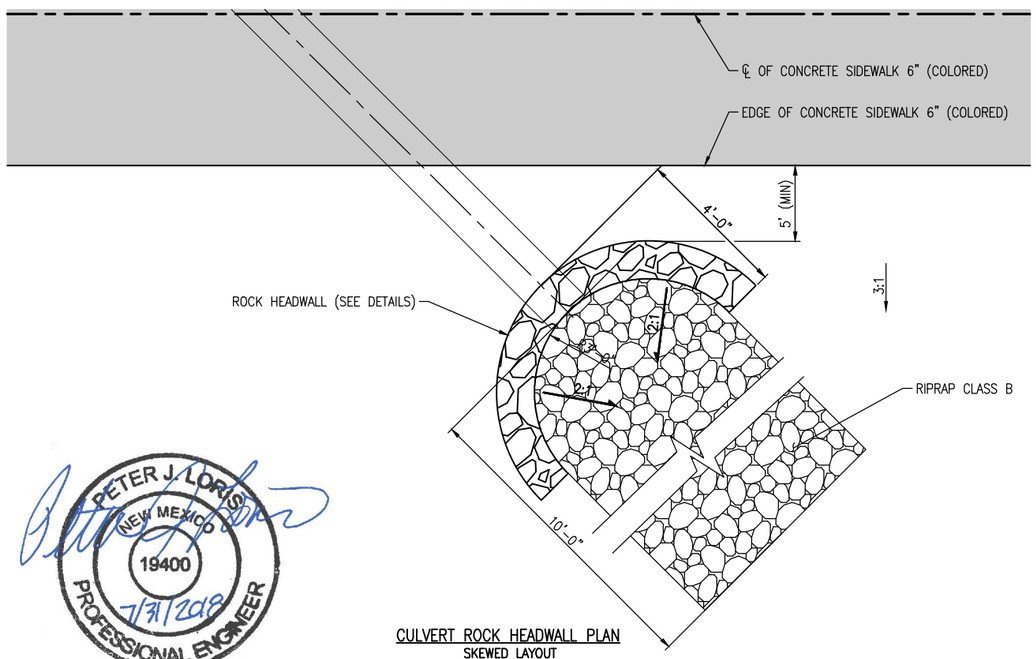

CULVERT ROCK HEADWALL PLAN
SKEWED LAYOUT
N.T.S.
NOTE: PAID FOR UNDER ITEM 667219-GRAVITY WALL

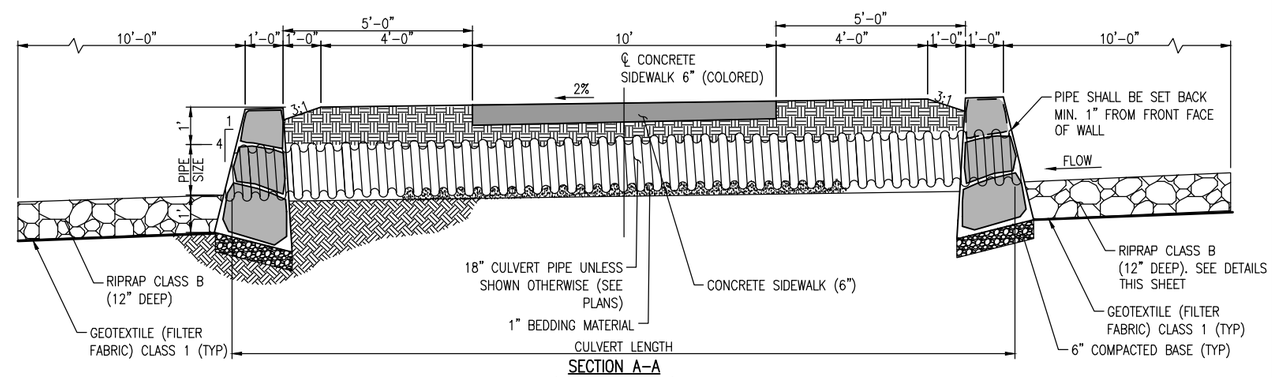

SECTION A-A
(ROCK HEADWALL)

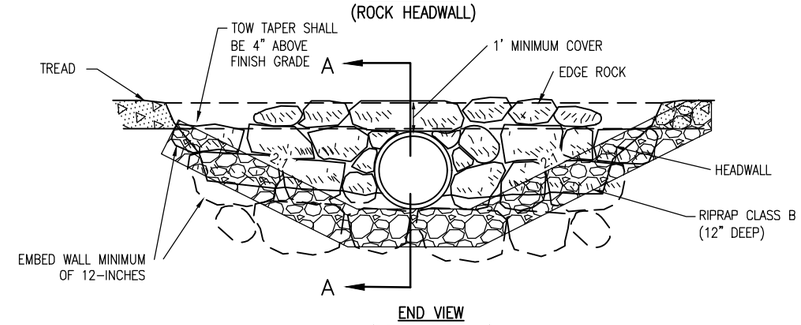

END VIEW
(ROCK HEADWALL)

PETER J. LORIS
NEW MEXICO
19400
7/31/2018
PROFESSIONAL ENGINEER

Print Date: Jul 31, 2018	Sheet Revisions			As Constructed	ARROYO HONDO TRAIL DETAILS	Project No./Code
File Name: 12126 (15-16) Segment 4 Details.dwg	Date:	Comments	Init.	No Revisions:		Arroyo Hondo Trail
Horiz. Scale: Vert. Scale: As Noted				Revised:	Designer: SJB / Structure Numbers	325-12126
Unit Information Unit Leader Initials				Void:	Detailer: LX / Sheet Subset: DT-01 / Subset Sheets: 2	15

Loris A DIVISION OF OTAK

SANTA FE COUNTY

G:\7.2 Clients\325 - Santa Fe County-NM\12126 - Arroyo Hondo Trail\50 DWG\Segment 4\12126 (15-16) Segment 4 Details.dwg Jul 31, 2018 - 11:23am

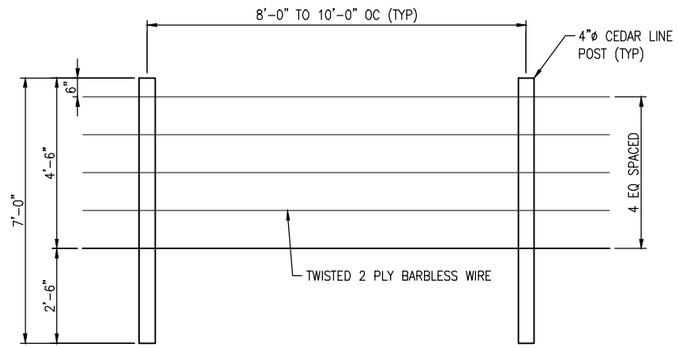

FENCING ELEVATION

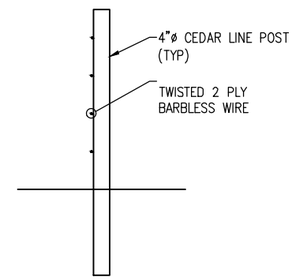

SECTION

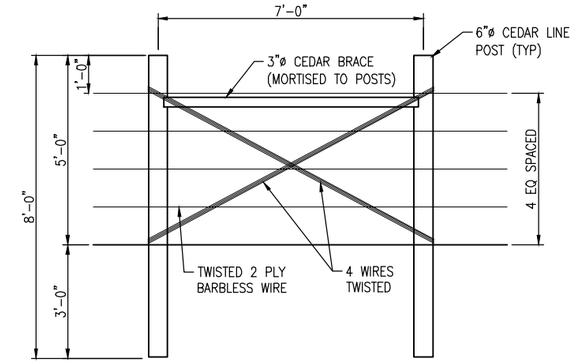

TYPICAL BRACE DETAIL

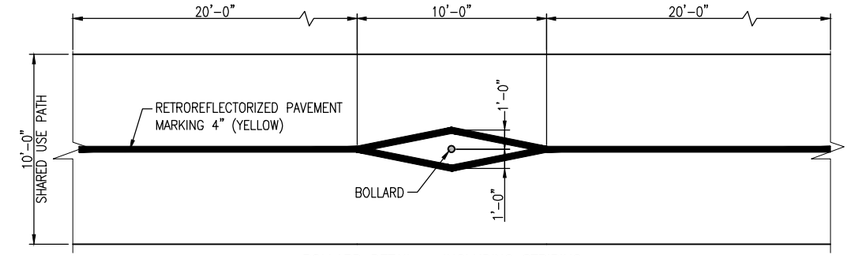

BOLLARD DETAIL – INCLUDING STRIPING

NOTES:

BOLLARDS SHALL BE REMOVABLE, 4" NOMINAL DIAMETER, MINIMUM 36" HEIGHT, WITH REFELCTIVE TAPE. APPROVED PRODUCTS INCLUDE:

RELIANCE FOUNDRY, R-8032-EX FLEXIBLE FIXED BOLLARD, BLACK WITH WHITE REFELCTIVE TAPE, AND REMOVABLE MOUNTING
http://www.reliance-foundry.com/bollard/removable-flexible/R-8303-EX-Bollard

POST GUARD TRADITIONAL BENDABLE BOLLARD – REMOVABLE WITH REMOVABLE BENDABLE BOLLARD BASE – INNER LID
https://www.postguard.com/classic-bendable-bollard-core-drilled-removable

GLASS CITY PLASTICS – CLASSIC BENDABLE BOLLARD – REMOVABLE WITH INNER BASE
https://www.glasscityplastics.com/bendable-bollards?productid=100

OR APPROVED EQUAL.

BOLLARDS SHALL BE INSTALLED PER MANUFACTURER'S INSTRUCTIONS.

Print Date: Jul 31, 2018	Sheet Revisions					As Constructed	ARROYO HONDO TRAIL DETAILS		Project No./Code
File Name: 12126 (15-16) Segment 4 Details.dwg	Date:	Comments	Init.	Loris A DIVISION OF OTAK	SANTA FE COUNTY	No Revisions:			Arroyo Hondo Trail
Horiz. Scale: Vert. Scale: As Noted						Revised:	Designer: SJB	Structure Numbers	325-12126
Unit Information Unit Leader Initials							Detailer: LX		
						Void:	Sheet Subset: DT-02	Subset Sheets: 2	16

G:\7.2 Clients\325 - Santa Fe County-NM\12126 - Arroyo Hondo Trail\50 DWG\Segment 4\12126 (15-16) Segment 4 Details.dwg Jul 31, 2018 - 11:23am

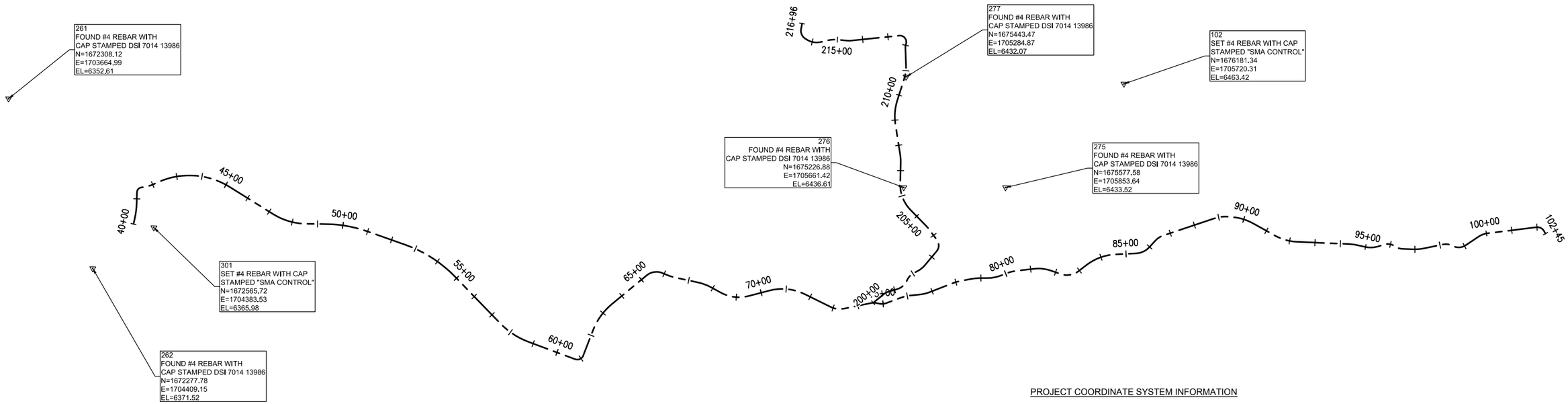

PROJECT COORDINATE SYSTEM INFORMATION

COORDINATE SYSTEM
US STATE PLANE 1983
NEW MEXICO CENTRAL ZONE
ALL DISTANCES ARE GRID DISTANCES, UNITS ARE US SURVEY FEET

VERTICAL DATUM
NAVD 1988
GEOID 12A(CONUS) WAS UTILIZED TO ESTABLISH ORTHO HEIGHTS

METHODS
ALL CONTROL ON THIS PROJECT WAS OBSERVED AND SET ON NOVEMBER 12, 2013. ALL POINTS WERE OBSERVED USING TRIMBLE R8 GPS RECEIVERS UTILIZING RTK GPS METHODS.

ABSOLUTE COORDINATES FOR THIS PROJECT ARE BASED ON NGS MONUMENT SANTA FE CORS ARP, PID: DF4369
N= 1700652.97
E= 1726963.76
ELEV= 6941.9

Segment 4 Point Table

POINT #	NORTHING	EASTING	ELEVATION	DESCRIPTION
102	1676181.34	1705720.31	6463.42	SET #4 REBAR WITH CAP STAMPED "SMA CONTROL"
261	1672308.12	1703664.99	6352.61	FOUND #4 REBAR WITH CAP STAMPED DSI 7014 13986
262	1672277.78	1704409.15	6371.52	FOUND #4 REBAR WITH CAP STAMPED DSI 7014 13986
275	1675577.58	1705853.64	6433.52	FOUND #4 REBAR WITH CAP STAMPED DSI 7014 13986
276	1675226.88	1705661.42	6436.61	FOUND #4 REBAR WITH CAP STAMPED DSI 7014 13986
277	1675443.47	1705284.87	6432.07	FOUND #4 REBAR WITH CAP STAMPED DSI 7014 13986
301	1672565.72	1704383.53	6365.98	SET #4 REBAR WITH CAP STAMPED "SMA CONTROL"

I, JAMES D. COMBS, NEW MEXICO PROFESSIONAL SURVEYOR NO. 23200, DO HEREBY CERTIFY THAT THIS CONTROL SURVEY REPORT WAS PREPARED BY ME OR UNDER MY DIRECT SUPERVISION BASED ON AN ACTUAL SURVEY ON THE GROUND AS DESCRIBED HEREIN; THAT I AM RESPONSIBLE FOR THIS SURVEY; AND THAT THE SURVEY AND REPORT MEETS THE MINIMUM STANDARDS FOR SURVEYING IN NEW MEXICO.

9-6-17

JAMES DAVID COMBS, N.M.P.S. 23200 — DATE

0 200 400
SCALE: 1" = 400'

Print Date: Sep 08, 2017	Sheet Revisions			As Constructed	ARROYO HONDO TRAIL LAND SURVEY CONTROL DIAGRAM (SEGMENT 4)	Project No./Code
File Name: 7221862 Land Survey Control Diagram (Seg 4).dwg	Date:	Comments	Init.	No Revisions:		Arroyo Hondo Trail
Horiz. Scale: Vert. Scale: As Noted				Revised:	Designer: SJB / Structure Numbers	325-12126
Unit Information Unit Leader Initials				Void:	Detailer: LX / Sheet Subset: SY-01 / Subset Sheets: 1	17

Loris and Associates, Inc.
100 Superior Plaza Way
Suite 220
Louisville, Colorado 80027
303.444.2073
www.LorisandAssociates.com

SANTA FE COUNTY

P:\7-Santa Fe County Arroyo Hondo Trail (7221862)\CAD\7221862 CAD 2017\Plans\01Sheets\7221862 Land Survey Control Diagram (Seg 4).dwg Sep 08, 2017 - 3:24pm

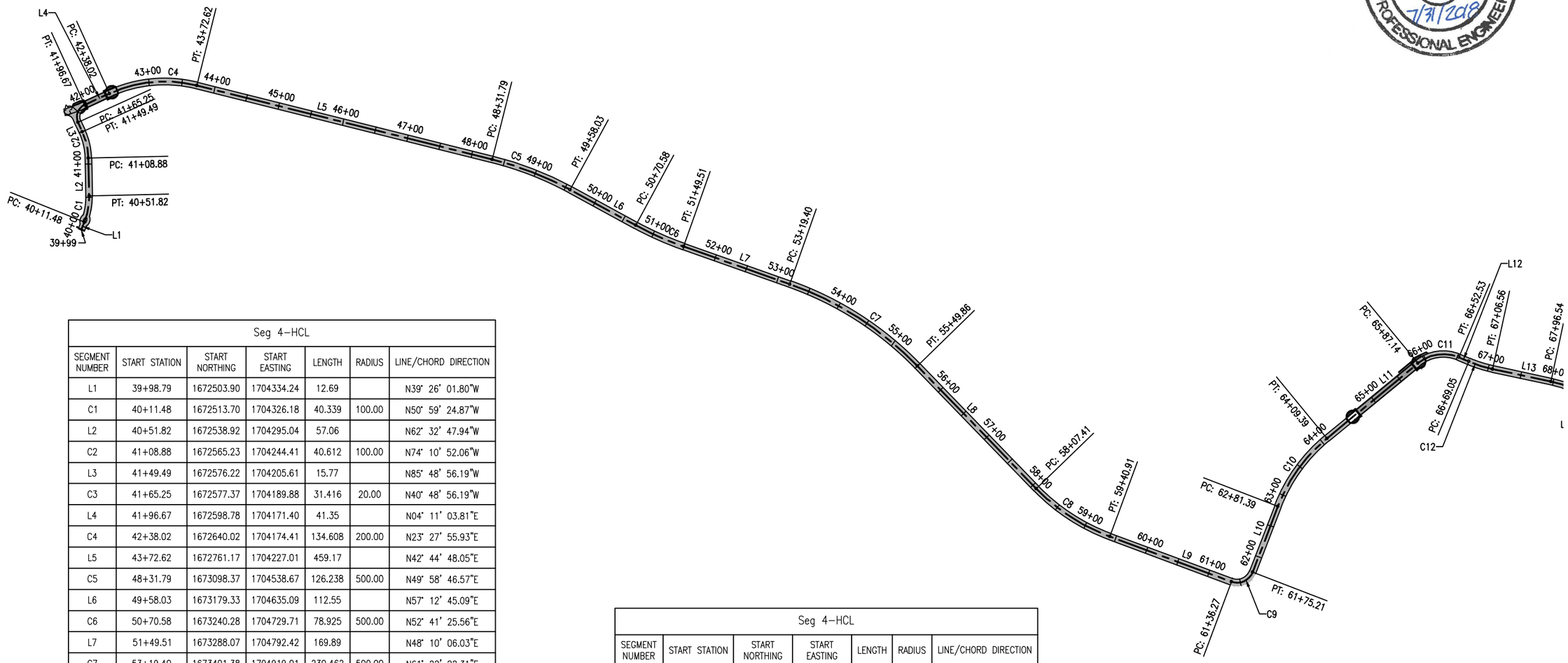

Seg 4–HCL						
SEGMENT NUMBER	START STATION	START NORTHING	START EASTING	LENGTH	RADIUS	LINE/CHORD DIRECTION
L1	39+98.79	1672503.90	1704334.24	12.69		N39° 26' 01.80"W
C1	40+11.48	1672513.70	1704326.18	40.339	100.00	N50° 59' 24.87"W
L2	40+51.82	1672538.92	1704295.04	57.06		N62° 32' 47.94"W
C2	41+08.88	1672565.23	1704244.41	40.612	100.00	N74° 10' 52.06"W
L3	41+49.49	1672576.22	1704205.61	15.77		N85° 48' 56.19"W
C3	41+65.25	1672577.37	1704189.88	31.416	20.00	N40° 48' 56.19"W
L4	41+96.67	1672598.78	1704171.40	41.35		N04° 11' 03.81"E
C4	42+38.02	1672640.02	1704174.41	134.608	200.00	N23° 27' 55.93"E
L5	43+72.62	1672761.17	1704227.01	459.17		N42° 44' 48.05"E
C5	48+31.79	1673098.37	1704538.67	126.238	500.00	N49° 58' 46.57"E
L6	49+58.03	1673179.33	1704635.09	112.55		N57° 12' 45.09"E
C6	50+70.58	1673240.28	1704729.71	78.925	500.00	N52° 41' 25.56"E
L7	51+49.51	1673288.07	1704792.42	169.89		N48° 10' 06.03"E
C7	53+19.40	1673401.38	1704919.01	230.462	500.00	N61° 22' 22.31"E
L8	55+49.86	1673510.82	1705119.51	257.55		N74° 34' 38.58"E
C8	58+07.41	1673579.31	1705367.79	133.493	300.00	N61° 49' 47.09"E
L9	59+40.91	1673641.82	1705484.50	195.37		N49° 04' 55.59"E
C9	61+36.27	1673769.78	1705632.13	38.942	25.00	N04° 27' 29.00"E
L10	61+75.21	1673804.79	1705634.86	106.17		N40° 09' 57.58"W
C10	62+81.39	1673885.93	1705566.38	127.999	250.00	N25° 29' 54.32"W

Seg 4–HCL						
SEGMENT NUMBER	START STATION	START NORTHING	START EASTING	LENGTH	RADIUS	LINE/CHORD DIRECTION
L11	64+09.39	1674000.20	1705511.88	177.75		N10° 49' 51.06"W
C11	65+87.14	1674174.79	1705478.47	65.390	60.00	N20° 23' 25.52"E
L12	66+52.53	1674233.09	1705500.15	16.52		N51° 36' 42.10"E
C12	66+69.05	1674243.35	1705513.10	37.506	200.00	N46° 14' 21.55"E
L13	67+06.56	1674269.26	1705540.15	89.98		N40° 52' 00.99"E

0 80 160
SCALE: 1" = 160'

PETER J. LORIS
NEW MEXICO
19400
7/31/2018
PROFESSIONAL ENGINEER

Print Date: Jul 31, 2018
File Name: 12126 (18–21) Geo (Seg 4).dwg
Horiz. Scale: Vert. Scale: As Noted
Unit Information Unit Leader Initials

Sheet Revisions

Date:	Comments	Init.

Loris
A DIVISION OF OTAK

SANTA FE COUNTY

As Constructed
No Revisions:
Revised:
Void:

ARROYO HONDO TRAIL
GEOMETRIC CONTROL PLAN

Designer: SJB
Detailer: LX
Sheet Subset: GE–01
Structure Numbers
Subset Sheets: 3

Project No./Code
Arroyo Hondo Trail
325–12126

G:\7.2 Clients\325 – Santa Fe County–NM\12126 – Arroyo Hondo Trail\50 DWG\Segment 4\12126 (18–21) Geo (Seg 4).dwg Jul 31, 2018 – 11:23am

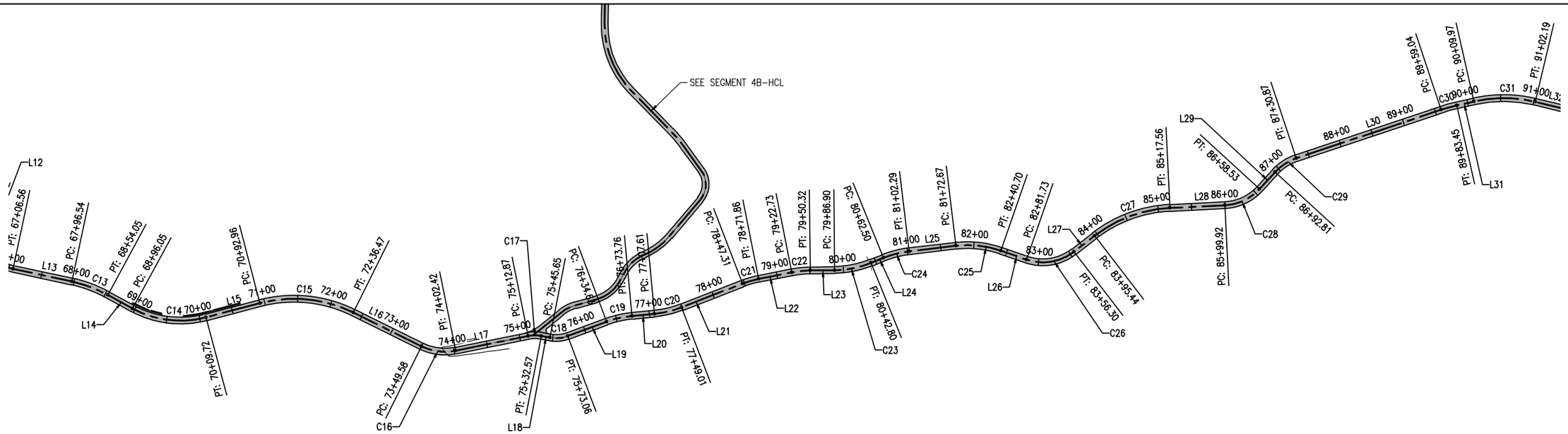

Seg 4-HCL						
SEGMENT NUMBER	START STATION	START NORTHING	START EASTING	LENGTH	RADIUS	LINE/CHORD DIRECTION
C13	67+96.54	1674337.30	1705599.02	57.514	200.00	N49° 06' 18.95"E
L14	68+54.05	1674374.82	1705642.35	42.00		N57° 20' 36.90"E
C14	68+96.05	1674397.49	1705677.71	113.665	150.00	N35° 38' 06.61"E
L15	70+09.72	1674487.68	1705742.36	83.24		N13° 55' 36.32"E
C15	70+92.96	1674568.47	1705762.39	143.515	200.00	N34° 29' 01.38"E
L16	72+36.47	1674684.24	1705841.92	113.10		N55° 02' 26.45"E
C16	73+49.58	1674749.05	1705934.61	52.842	80.00	N36° 07' 04.99"E
L17	74+02.42	1674790.96	1705965.20	110.46		N17° 11' 43.53"E
C17	75+12.87	1674896.48	1705997.85	19.692	50.00	N28° 28' 41.75"E
L18	75+32.57	1674913.68	1706007.18	13.09		N39° 45' 39.98"E
C18	75+45.65	1674923.74	1706015.55	27.408	50.00	N24° 03' 27.15"E
L19	75+73.06	1674948.46	1706026.58	61.57		N08° 21' 14.33"E
C19	76+34.63	1675009.38	1706035.53	39.124	150.00	N15° 49' 34.24"E
L20	76+73.76	1675046.91	1706046.17	33.85		N23° 17' 54.16"E
C20	77+07.61	1675078.00	1706059.56	41.404	150.00	N15° 23' 26.64"E
L21	77+49.01	1675117.79	1706070.51	98.30		N07° 28' 59.12"E
C21	78+47.31	1675215.26	1706083.31	24.547	140.00	N12° 30' 21.92"E
L22	78+71.86	1675239.19	1706088.62	50.87		N17° 31' 44.72"E
C22	79+22.73	1675287.70	1706103.94	27.591	150.00	N22° 47' 55.00"E
L23	79+50.32	1675313.10	1706114.62	36.58		N28° 04' 05.28"E

Seg 4-HCL						
SEGMENT NUMBER	START STATION	START NORTHING	START EASTING	LENGTH	RADIUS	LINE/CHORD DIRECTION
C23	79+86.90	1675345.37	1706131.83	55.896	150.00	N17° 23' 33.68"E
L24	80+42.80	1675398.41	1706148.44	19.70		N06° 43' 02.08"E
C24	80+62.50	1675417.97	1706150.75	39.792	150.00	N14° 19' 00.75"E
L25	81+02.29	1675456.42	1706160.56	70.38		N21° 54' 59.42"E
C25	81+72.67	1675521.71	1706186.83	68.034	150.00	N34° 54' 35.85"E
L26	82+40.70	1675577.02	1706225.43	41.03		N47° 54' 12.28"E
C26	82+81.73	1675604.53	1706255.87	74.569	75.00	N19° 25' 12.09"E
L27	83+56.30	1675671.99	1706279.66	39.14		N09° 03' 48.09"W
C27	83+95.44	1675710.64	1706273.49	122.122	200.00	N08° 25' 45.45"E
L28	85+17.56	1675829.58	1706291.12	82.36		N25° 55' 18.99"E
C28	85+99.92	1675903.65	1706327.12	58.607	75.00	N03° 32' 08.57"E
L29	86+58.53	1675960.67	1706330.65	34.28		N18° 51' 01.84"W
C29	86+92.81	1675993.11	1706319.57	38.062	75.00	N04° 18' 43.35"W
L30	87+30.87	1676030.66	1706316.74	228.17		N10° 13' 35.14"E
C30	89+59.04	1676255.20	1706357.25	24.407	250.00	N13° 01' 23.75"E
L31	89+83.45	1676278.97	1706362.74	26.52		N15° 49' 12.36"E
C31	90+09.97	1676304.49	1706369.97	92.221	200.00	N29° 01' 47.21"E

0 160 80
SCALE: 1" = 160'

Print Date: Jul 31, 2018	Sheet Revisions		
File Name: 12126 (18-21) Geo (Seg 4).dwg	Date:	Comments	Init.
Horiz. Scale: Vert. Scale: As Noted			
Unit Information Unit Leader Initials			

Loris — A DIVISION OF OTAK

SANTA FE COUNTY

As Constructed	ARROYO HONDO TRAIL GEOMETRIC CONTROL PLAN		Project No./Code
No Revisions:			Arroyo Hondo Trail
Revised:	Designer: SJB	Structure Numbers	325-12126
Void:	Detailer: LX		
	Sheet Subset: GE-01	Subset Sheets: 2	19

G:\7.2 Clients\325 - Santa Fe County-NM\12126 - Arroyo Hondo Trail\50 DWG\Segment 4\12126 (18-21) Geo (Seg 4).dwg Jul 31, 2018 - 11:23am

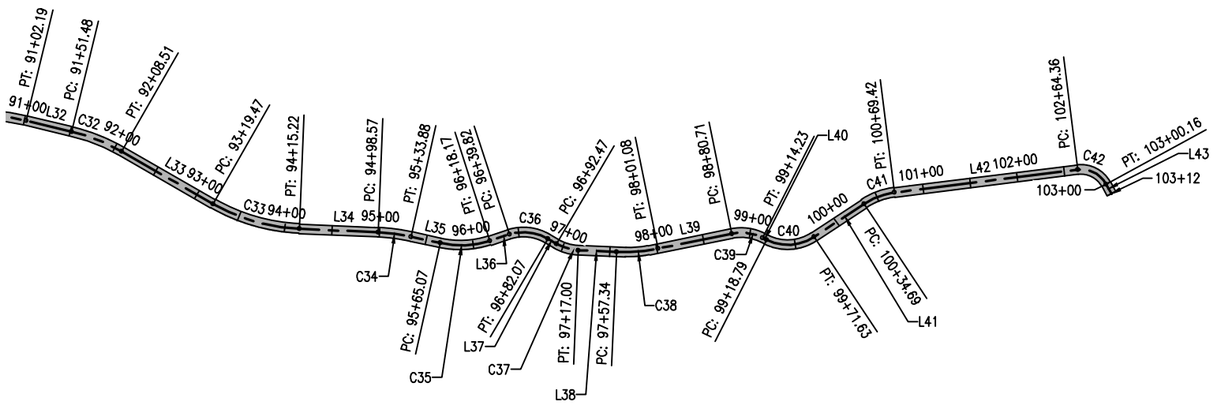

Seg 4–HCL						
SEGMENT NUMBER	START STATION	START NORTHING	START EASTING	LENGTH	RADIUS	LINE/CHORD DIRECTION
L32	91+02.19	1676384.41	1706414.33	49.29		N42° 14' 22.07"E
C32	91+51.48	1676420.90	1706447.47	57.032	200.00	N50° 24' 31.32"E
L33	92+08.51	1676457.13	1706491.27	110.96		N58° 34' 40.56"E
C33	93+19.47	1676514.98	1706585.95	95.749	200.00	N44° 51' 46.39"E
L34	94+15.22	1676582.20	1706652.85	83.34		N31° 08' 52.21"E
C34	94+98.57	1676653.53	1706695.96	35.318	200.00	N36° 12' 24.45"E
L35	95+33.88	1676681.99	1706716.80	31.18		N41° 15' 56.69"E
C35	95+65.07	1676705.43	1706737.37	53.105	100.00	N26° 03' 08.70"E
L36	96+18.17	1676752.58	1706760.42	21.65		N10° 50' 20.71"E
C36	96+39.82	1676773.84	1706764.49	42.250	50.00	N35° 02' 47.48"E
L37	96+82.07	1676807.41	1706788.03	10.40		N59° 15' 14.26"E
C37	96+92.47	1676812.73	1706796.98	24.527	50.00	N45° 12' 03.23"E
L38	97+17.00	1676829.84	1706814.21	40.34		N31° 08' 52.21"E
C38	97+57.34	1676864.36	1706835.07	43.740	180.00	N24° 11' 10.78"E
L39	98+01.08	1676904.16	1706852.95	79.63		N17° 13' 29.35"E
C39	98+80.71	1676980.22	1706876.53	33.519	50.00	N36° 25' 47.16"E
L40	99+14.23	1677006.69	1706896.06	4.56		N55° 38' 04.97"E
C40	99+18.79	1677009.26	1706899.83	52.836	50.00	N25° 21' 42.01"E
L41	99+71.63	1677054.82	1706921.42	63.07		N04° 54' 40.95"W
C41	100+34.69	1677117.65	1706916.02	34.730	75.00	N08° 21' 15.89"E
L42	100+69.42	1677151.70	1706921.02	194.94		N21° 37' 12.73"E
C42	102+64.36	1677332.93	1706992.85	35.804	30.00	N55° 48' 36.37"E
L43	103+00.16	1677351.87	1707020.74	11.38		N90° 00' 00.00"E

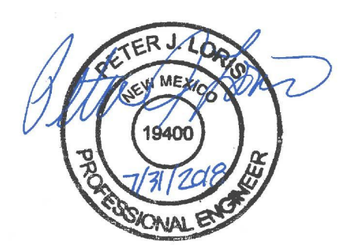

0 100 200
SCALE: 1" = 200'

Print Date: Jul 31, 2018
File Name: 12126 (18–21) Geo (Seg 4).dwg
Horiz. Scale: Vert. Scale: As Noted
Unit Information Unit Leader Initials

Sheet Revisions

Date:	Comments	Init.

Loris
A DIVISION OF OTAK

SANTA FE COUNTY

As Constructed
No Revisions:
Revised:
Void:

ARROYO HONDO TRAIL
GEOMETRIC CONTROL PLAN

Designer: SJB
Detailer: LX
Sheet Subset: GE–03
Structure Numbers
Subset Sheets: 4

Project No./Code
Arroyo Hondo Trail
325–12126

G:\7.2 Clients\325 – Santa Fe County–NM\12126 – Arroyo Hondo Trail\50 DWG\Segment 4\12126 (18–21) Geo (Seg 4).dwg Jul 31, 2018 – 11:23am

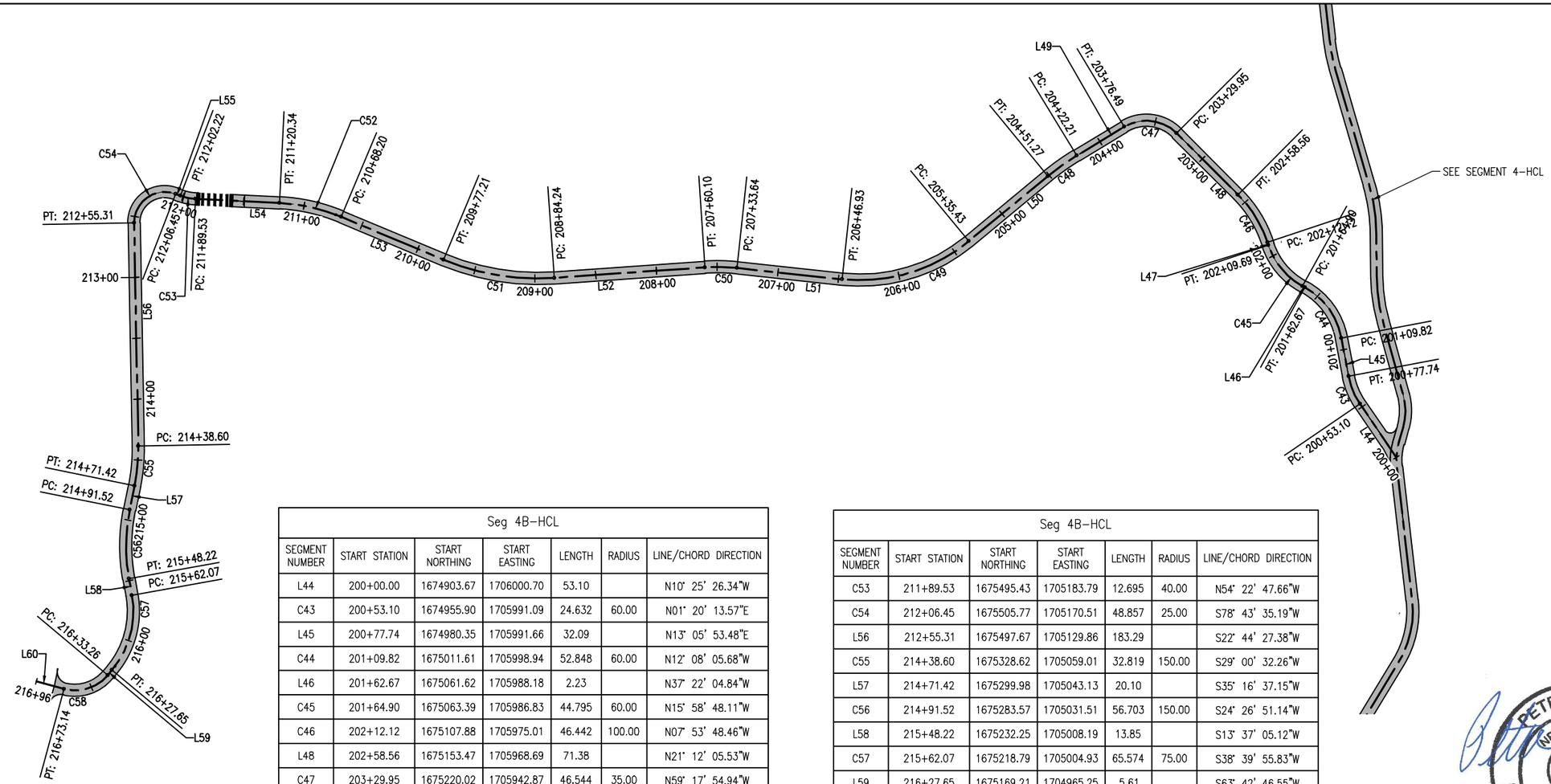

Seg 4B-HCL						
SEGMENT NUMBER	START STATION	START NORTHING	START EASTING	LENGTH	RADIUS	LINE/CHORD DIRECTION
L44	200+00.00	1674903.67	1706000.70	53.10		N10° 25' 26.34"W
C43	200+53.10	1674955.90	1705991.09	24.632	60.00	N01° 20' 13.57"E
L45	200+77.74	1674980.35	1705991.66	32.09		N13° 05' 53.48"E
C44	201+09.82	1675011.61	1705998.94	52.848	60.00	N12° 08' 05.68"W
L46	201+62.67	1675061.62	1705988.18	2.23		N37° 22' 04.84"W
C45	201+64.90	1675063.39	1705986.83	44.795	60.00	N15° 58' 48.11"W
C46	202+12.12	1675107.88	1705975.01	46.442	100.00	N07° 53' 48.46"W
L48	202+58.56	1675153.47	1705968.69	71.38		N21° 12' 05.53"W
C47	203+29.95	1675220.02	1705942.87	46.544	35.00	N59° 17' 54.94"W
L49	203+76.49	1675242.07	1705905.74	45.72		S82° 36' 15.65"W
C48	204+22.21	1675236.18	1705860.40	29.055	200.00	S78° 26' 33.03"W
L50	204+51.27	1675230.37	1705831.95	84.17		S74° 16' 50.42"W
C49	205+35.43	1675207.56	1705750.94	111.496	140.00	N82° 54' 14.61"W
L51	206+46.93	1675220.98	1705643.19	86.72		N60° 05' 19.63"W
C50	207+33.64	1675264.22	1705568.03	26.451	150.00	N65° 08' 25.68"W
L52	207+60.10	1675275.32	1705544.06	124.14		N70° 11' 31.72"W
C51	208+84.24	1675317.39	1705427.26	92.978	200.00	N56° 52' 26.67"W
L53	209+77.21	1675367.74	1705350.10	90.98		N43° 33' 21.62"W
C52	210+68.20	1675433.68	1705287.40	52.139	150.00	N53° 30' 49.98"W
L54	211+20.34	1675464.53	1705245.69	69.19		N63° 28' 18.33"W

Seg 4B-HCL						
SEGMENT NUMBER	START STATION	START NORTHING	START EASTING	LENGTH	RADIUS	LINE/CHORD DIRECTION
C53	211+89.53	1675495.43	1705183.79	12.695	40.00	N54° 22' 47.66"W
C54	212+06.45	1675505.77	1705170.51	48.857	25.00	S78° 43' 35.19"W
L56	212+55.31	1675497.67	1705129.86	183.29		S22° 44' 27.38"W
C55	214+38.60	1675328.62	1705059.01	32.819	150.00	S29° 00' 32.26"W
L57	214+71.42	1675299.98	1705043.13	20.10		S35° 16' 37.15"W
C56	214+91.52	1675283.57	1705031.51	56.703	150.00	S24° 26' 51.14"W
L58	215+48.22	1675232.25	1705008.19	13.85		S13° 37' 05.12"W
C57	215+62.07	1675218.79	1705004.93	65.574	75.00	S38° 39' 55.83"W
L59	216+27.65	1675169.21	1704965.25	5.61		S63° 42' 46.55"W
C58	216+33.26	1675166.72	1704960.22	39.877	35.00	N83° 38' 50.90"W
L60	216+73.14	1675170.90	1704922.70	23.35		N51° 00' 28.35"W

PETER J. LORIS
NEW MEXICO
19400
7/31/2018
PROFESSIONAL ENGINEER

N

0 50 100
SCALE: 1" = 100'

Print Date: Jul 31, 2018	Sheet Revisions			As Constructed	ARROYO HONDO TRAIL GEOMETRIC CONTROL PLAN	Project No./Code
File Name: 12126 (18-21) Geo (Seg 4).dwg	Date:	Comments	Init.	No Revisions:		Arroyo Hondo Trail
Horiz. Scale: Vert. Scale: As Noted				Revised:	Designer: SJB / Structure Numbers	325-12126
Unit Information Unit Leader Initials				Void:	Detailer: LX / Sheet Subset: GE-04 / Subset Sheets: 4	21

Loris A DIVISION OF OTAK

SANTA FE COUNTY

G:\7.2 Clients\325 - Santa Fe County-NM\12126 - Arroyo Hondo Trail\50 DWG\Segment 4\12126 (18-21) Geo (Seg 4).dwg Jul 31, 2018 - 11:23am

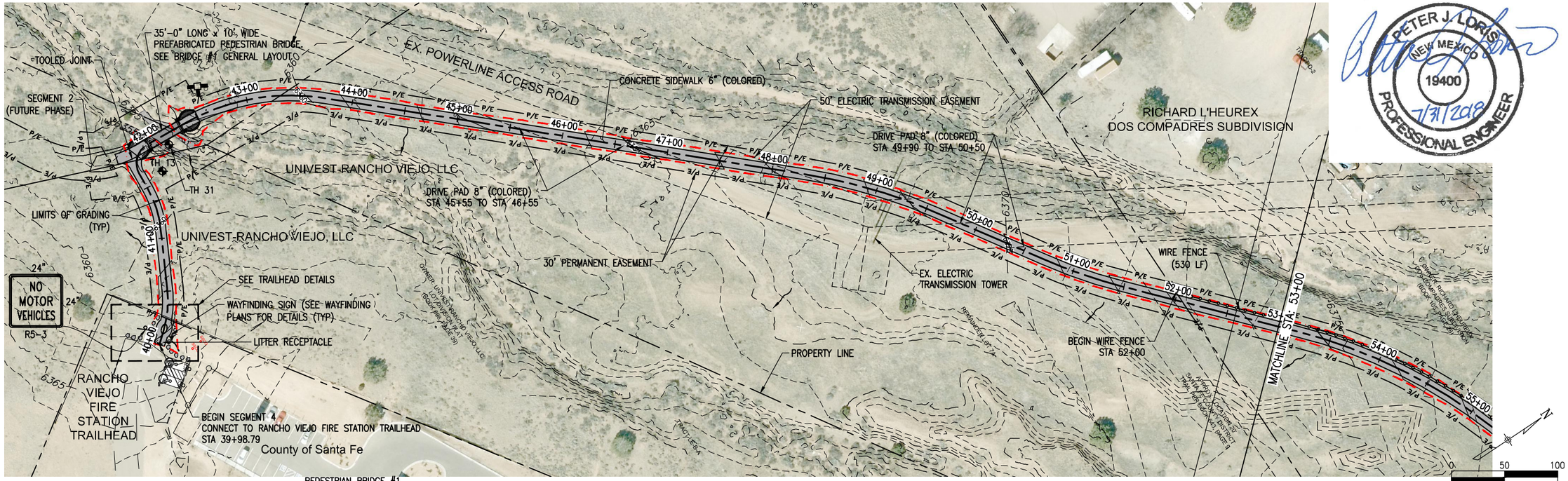

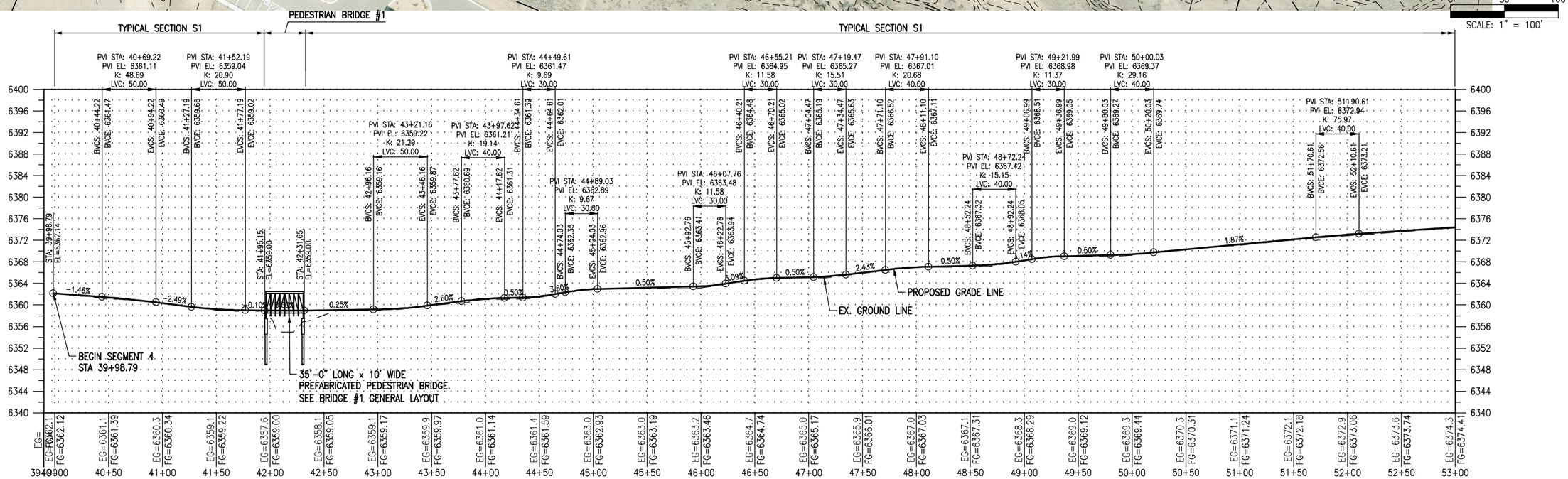

Print Date: Jul 31, 2018	Sheet Revisions		
File Name: 12126 (22-26) Plan & Profile (Seg 4)(100x).dwg	Date:	Comments	Init.
Horiz. Scale: Vert. Scale: As Noted			
Unit Information Unit Leader Initials			

Loris — A DIVISION OF OTAK

SANTA FE COUNTY

As Constructed	ARROYO HONDO TRAIL PLAN AND PROFILE			Project No./Code
No Revisions:				Arroyo Hondo Trail
Revised:	Designer: SJB	Structure Numbers		325-12126
Void:	Detailer: LX			
	Sheet Subset: PP-01	Subset Sheets: 7		22

PETER J. LORIS NEW MEXICO 19400 PROFESSIONAL ENGINEER 7/31/2018

G:\7.2 Clients\325 - Santa Fe County-NM\12126 - Arroyo Hondo Trail\50 DWG\Segment 4\12126 (22-26) Plan & Profile (Seg 4)(100x).dwg Jul 31, 2018 - 11:25am

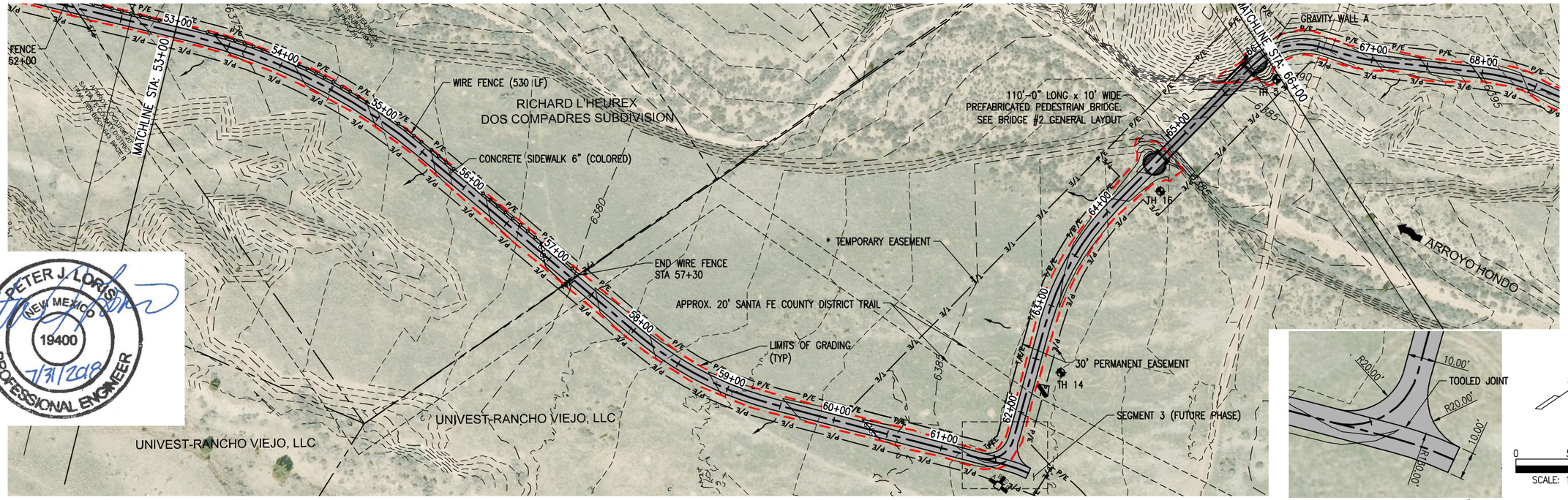

PETER J. LORIS
NEW MEXICO
19400
7/31/2018
PROFESSIONAL ENGINEER

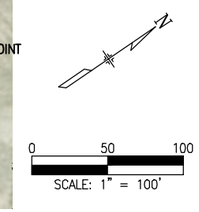

* TEMPORARY EASEMENT IS FOR DELIVERY, STAGING ASSEMBLY, AND INSTALLATION OF THE BRIDGE ONLY. STORAGE OF MATERIALS OR DISTURBANCE OF EXISTING VEGETATION WILL NOT BE PERMITTED. ANY VEGETATION DISTURBED SHALL BE RESTORED AT NO ADDITIONAL COST.

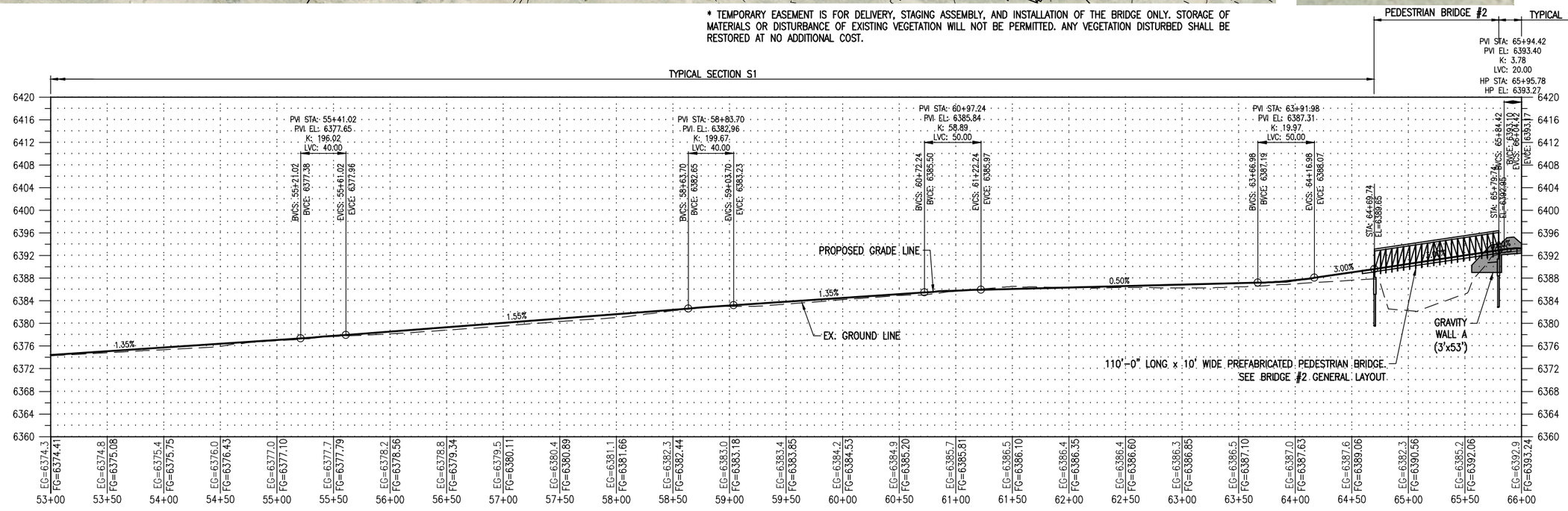

Print Date: Jul 31, 2018	Sheet Revisions			As Constructed	ARROYO HONDO TRAIL PLAN AND PROFILE	Project No./Code
File Name: 12126 (22-26) Plan & Profile (Seg 4)(100x).dwg	Date:	Comments	Init.	No Revisions:		Arroyo Hondo Trail
Horiz. Scale: Vert. Scale: As Noted				Revised:	Designer: SJB / Structure Numbers	325-12126
Unit Information Unit Leader Initials				Void:	Detailer: LX / Sheet Subset: PP-02 / Subset Sheets: 7	23

Loris A DIVISION OF OTAK

SANTA FE COUNTY

G:\7.2 Clients\325 - Santa Fe County-NM\12126 - Arroyo Hondo Trail\50 DWG\Segment 4\12126 (22-26) Plan & Profile (Seg 4)(100x).dwg Jul 31, 2018 - 11:26am

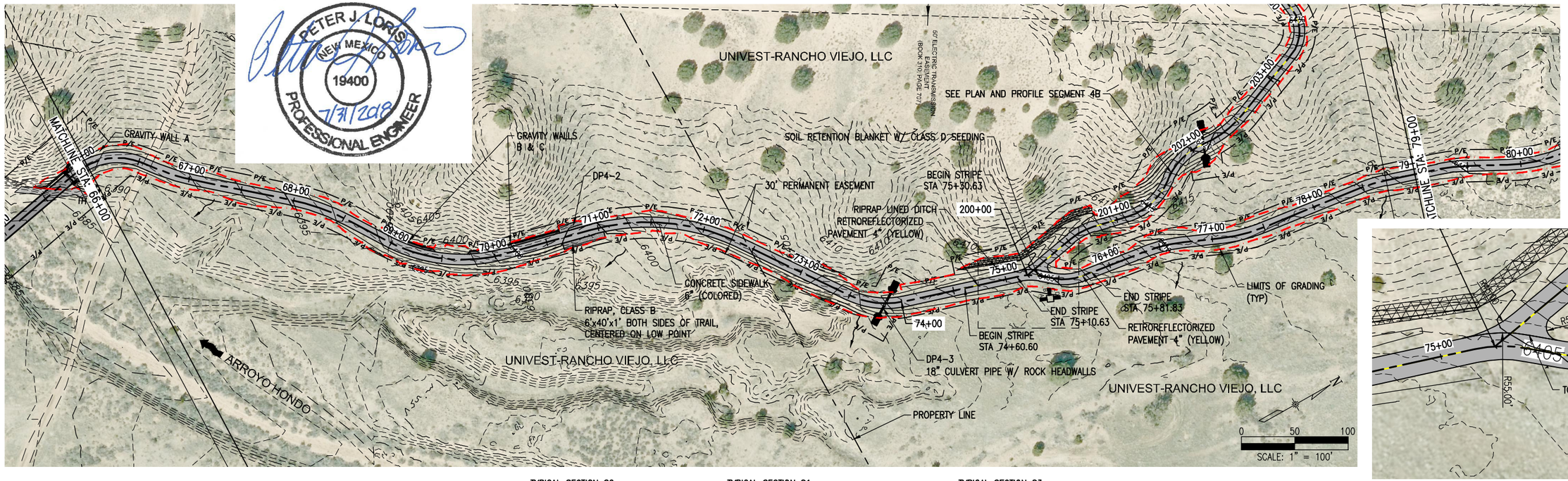

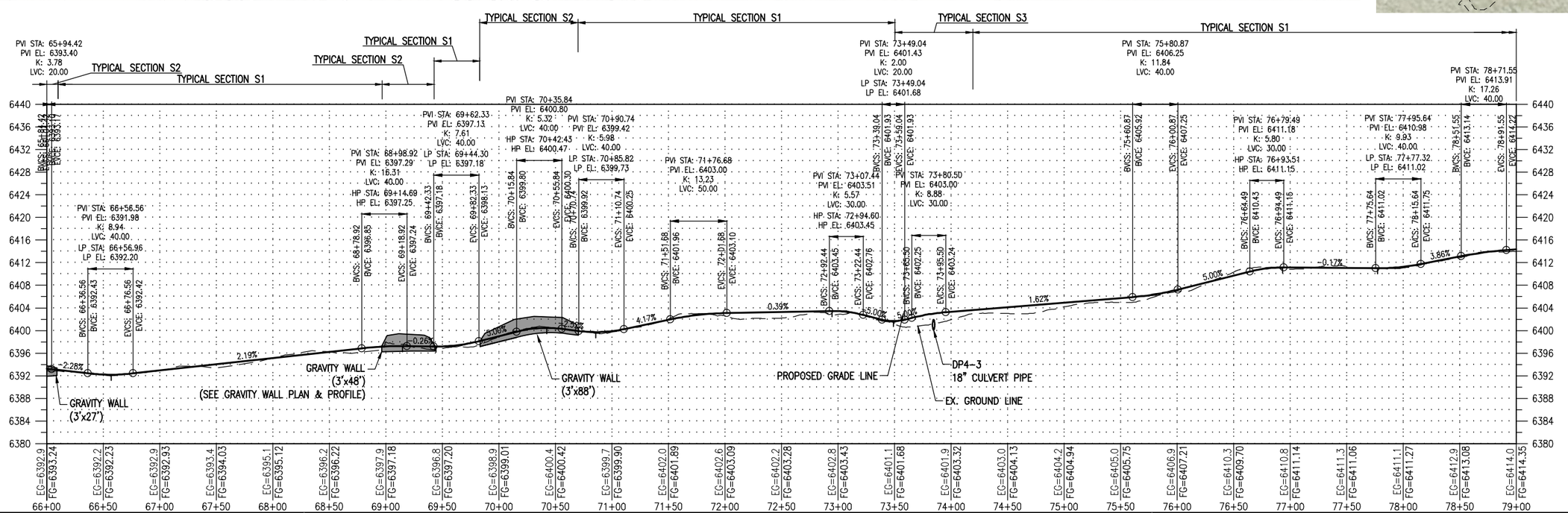

Print Date: Jul 31, 2018	Sheet Revisions			As Constructed	ARROYO HONDO TRAIL PLAN AND PROFILE	Project No./Code
File Name: 12126 (22-26) Plan & Profile (Seg 4)(100x).dwg	Date:	Comments	Init.	No Revisions:		Arroyo Hondo Trail
Horiz. Scale: Vert. Scale: As Noted				Revised:	Designer: SJB / Structure Numbers	325-12126
Unit Information Unit Leader Initials				Void:	Detailer: LX / Sheet Subset: PP-03 / Subset Sheets: 7	24

Loris A DIVISION OF OTAK

SANTA FE COUNTY

G:\7.2 Clients\325 - Santa Fe County-NM\12126 - Arroyo Hondo Trail\50 DWG\Segment 4\12126 (22-26) Plan & Profile (Seg 4)(100x).dwg Jul 31, 2018 - 11:27am

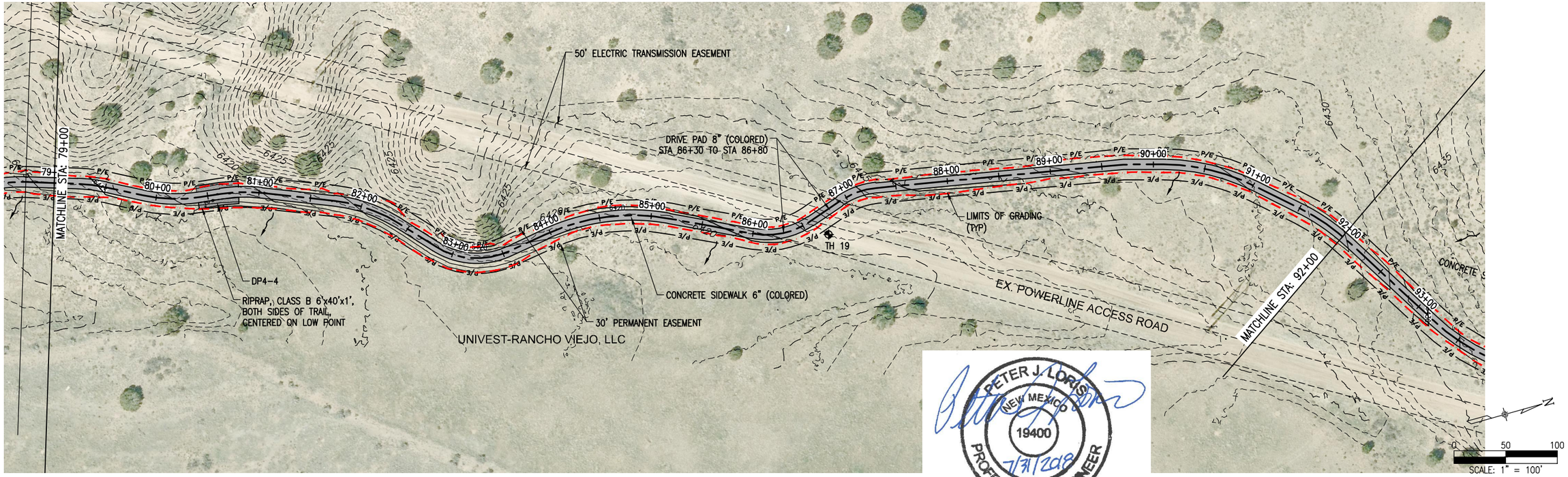

PETER J. LORIS
NEW MEXICO
19400
7/31/2018
PROFESSIONAL ENGINEER

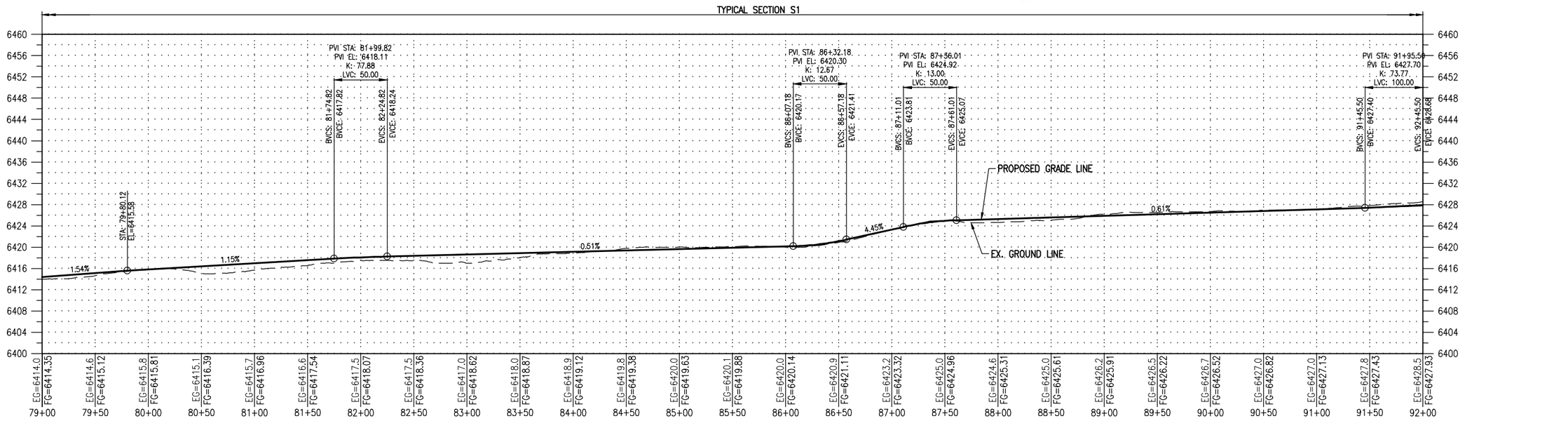

Print Date: Jul 31, 2018	Sheet Revisions			As Constructed	ARROYO HONDO TRAIL PLAN AND PROFILE	Project No./Code
File Name: 12126 (22-26) Plan & Profile (Seg 4)(100x).dwg	Date:	Comments	Init.	No Revisions:		Arroyo Hondo Trail
Horiz. Scale: Vert. Scale: As Noted				Revised:	Designer: SJB / Structure Numbers	325-12126
Unit Information Unit Leader Initials				Void:	Detailer: LX / Sheet Subset: PP-04 / Subset Sheets: 7	25

Loris — A DIVISION OF OTAK

SANTA FE COUNTY

G:\7.2 Clients\325 - Santa Fe County-NM\12126 - Arroyo Hondo Trail\50 DWG\Segment 4\12126 (22-26) Plan & Profile (Seg 4)(100x).dwg Jul 31, 2018 - 11:28am

PETER J. LORIS
NEW MEXICO
19400
7/31/2018
PROFESSIONAL ENGINEER

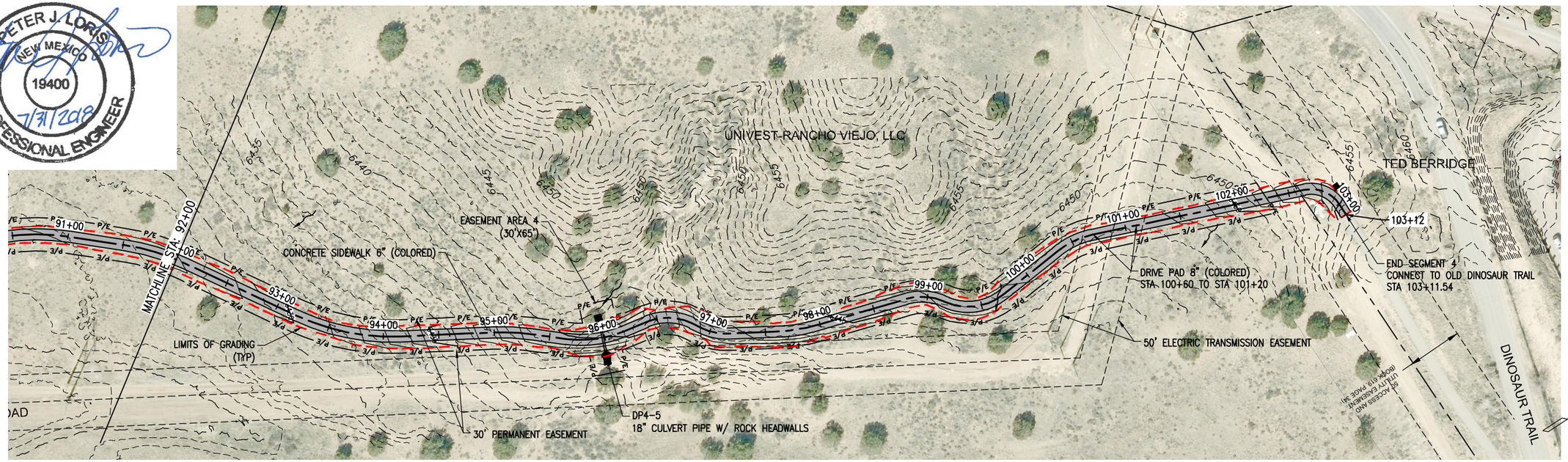

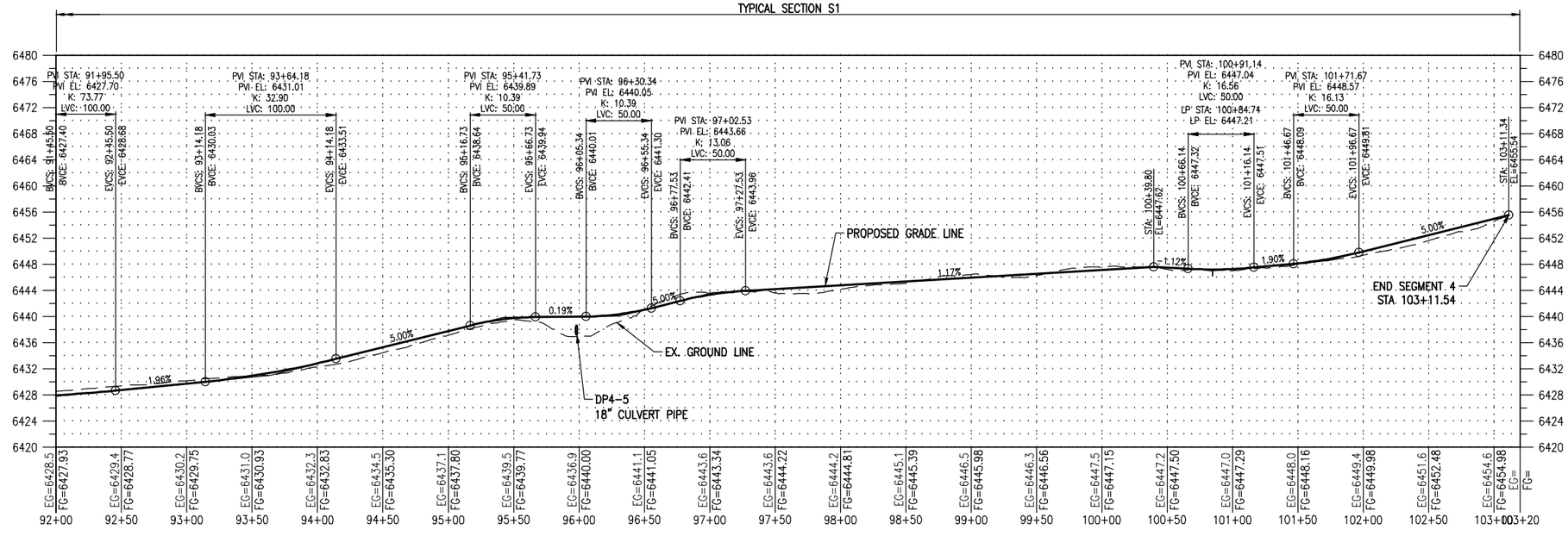

Print Date: Jul 31, 2018	Sheet Revisions	As Constructed	ARROYO HONDO TRAIL PLAN AND PROFILE	Project No./Code
File Name: 12126 (22-26) Plan & Profile (Seg 4)(100x).dwg	Date: Comments Init.	No Revisions:		Arroyo Hondo Trail
Horiz. Scale: Vert. Scale: As Noted		Revised:	Designer: SJB / Detailer: LX / Structure Numbers	325-12126
Unit Information Unit Leader Initials		Void:	Sheet Subset: PP-05 / Subset Sheets: 7	26

Loris A DIVISION OF OTAK

SANTA FE COUNTY

G:\7.2 Clients\325 - Santa Fe County-NM\12126 - Arroyo Hondo Trail\50 DWG\Segment 4\12126 (22-26) Plan & Profile (Seg 4)(100x).dwg Jul 31, 2018 - 11:29am

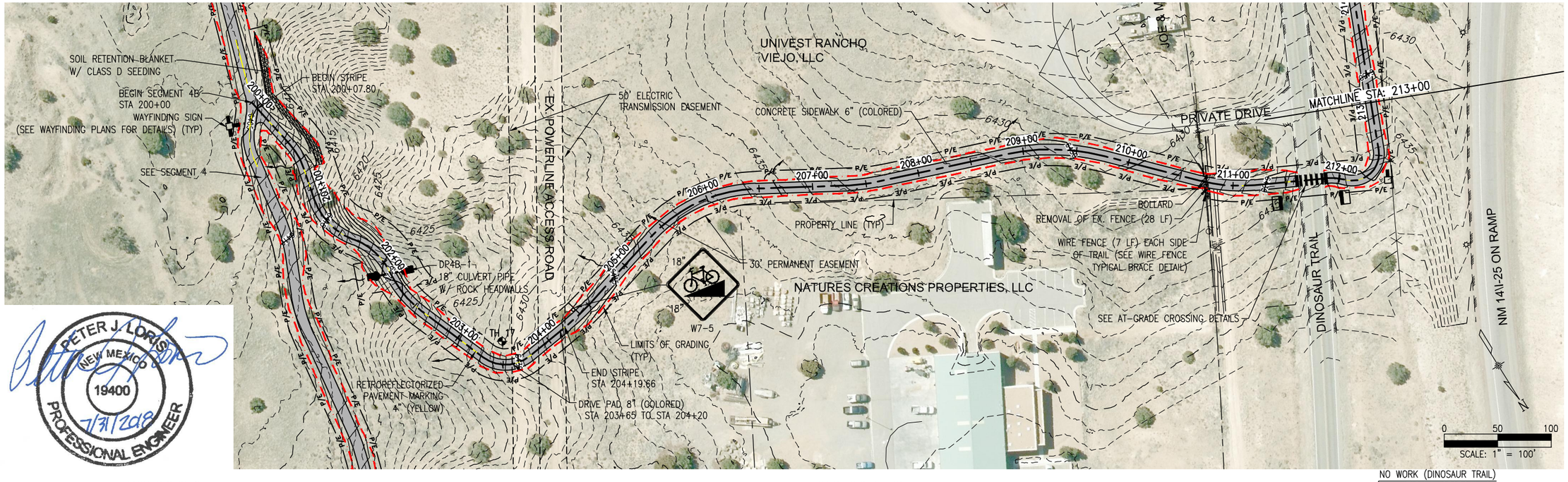

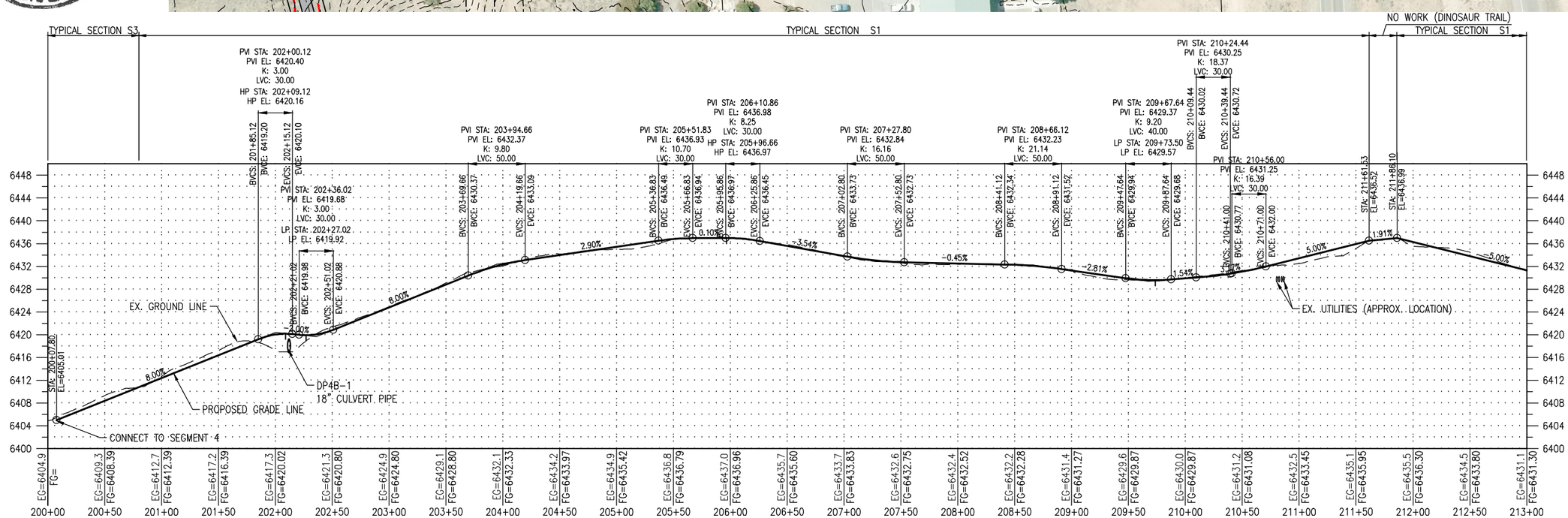

PETER J. LORIS NEW MEXICO 19400 PROFESSIONAL ENGINEER 7/31/2018

Print Date: Jul 31, 2018	Sheet Revisions		
File Name: 12126 (13-14) Plan & Profile (Seg4B)(100x).dwg	Date:	Comments	Init.
Horiz. Scale: Vert. Scale: As Noted			
Unit Information Unit Leader Initials			

Loris A DIVISION OF OTAK

SANTA FE COUNTY

As Constructed	ARROYO HONDO TRAIL PLAN AND PROFILE		Project No./Code
No Revisions:			Arroyo Hondo Trail
Revised:	Designer: SJB	Structure Numbers	325-12126
Void:	Detailer: LX		
	Sheet Subset: PP-06	Subset Sheets: 7	27

G:\7.2 Clients\325 - Santa Fe County-NM\12126 - Arroyo Hondo Trail\50 DWG\Segment 4\12126 (13-14) Plan & Profile (Seg4B)(100x).dwg Jul 31, 2018 - 11:22am

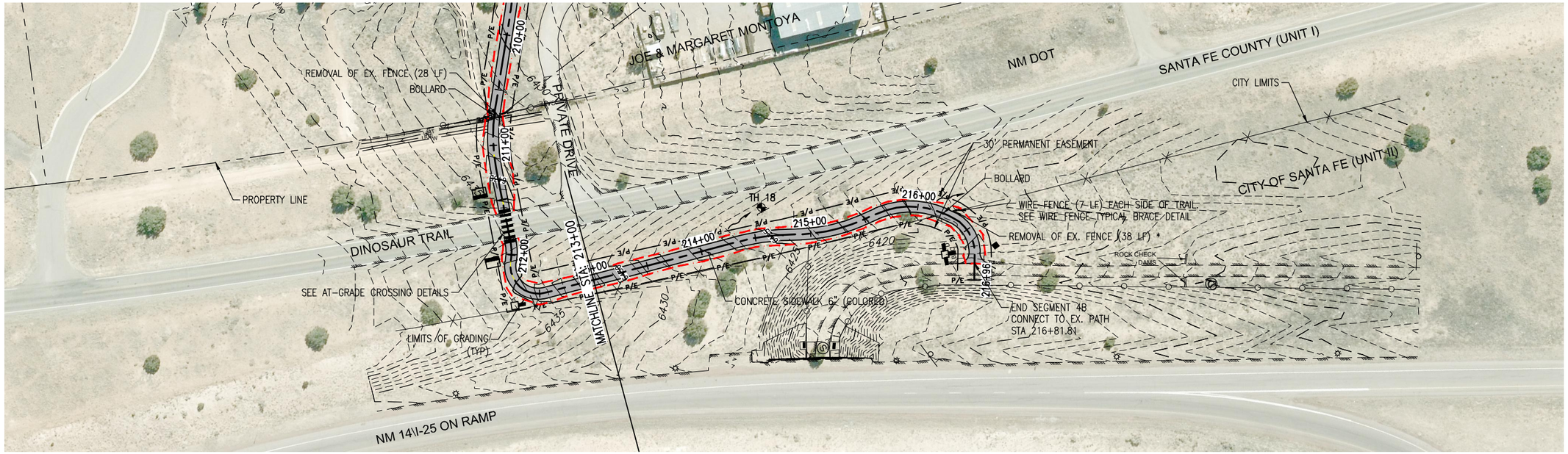

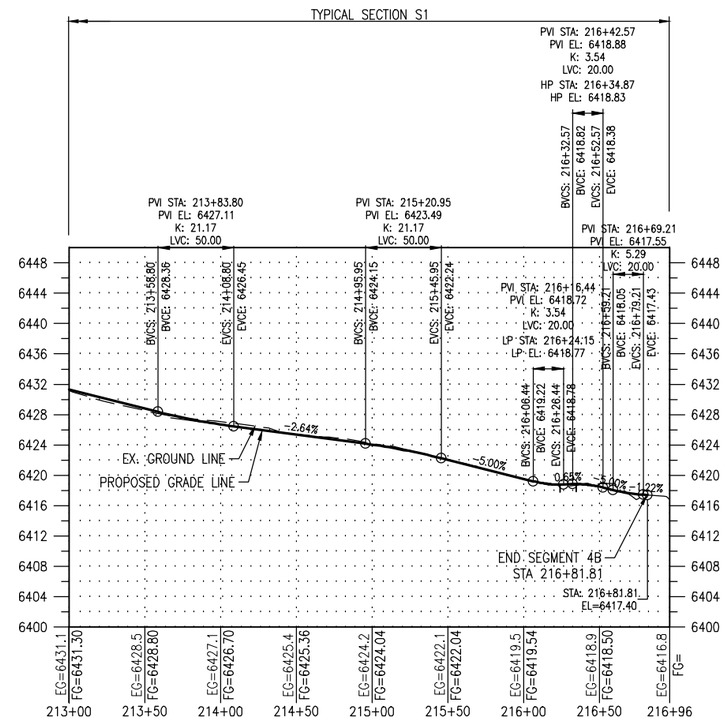

* COST INCLUDED IN ITEM 601000 REMOVAL OF STRUCTURES AND OBSTRUCTIONS

0 50 100
SCALE: 1" = 100'

PETER J. LORIS
NEW MEXICO
19400
7/31/2018
PROFESSIONAL ENGINEER

Print Date: Jul 31, 2018	Sheet Revisions		
File Name: 12126 (13-14) Plan & Profile (Seg4B)(100x).dwg	Date:	Comments	Init.
Horiz. Scale: Vert. Scale: As Noted			
Unit Information Unit Leader Initials			

Loris — A DIVISION OF OTAK

SANTA FE COUNTY

As Constructed	ARROYO HONDO TRAIL PLAN AND PROFILE			Project No./Code
No Revisions:				Arroyo Hondo Trail
Revised:	Designer: SJB	Structure Numbers		325-12126
Void:	Detailer: LX			
	Sheet Subset: PP-07	Subset Sheets: 7		28

G:\7.2 Clients\325 - Santa Fe County-NM\12126 - Arroyo Hondo Trail\50 DWG\Segment 4\12126 (13-14) Plan & Profile (Seg4B)(100x).dwg Jul 31, 2018 - 11:23am

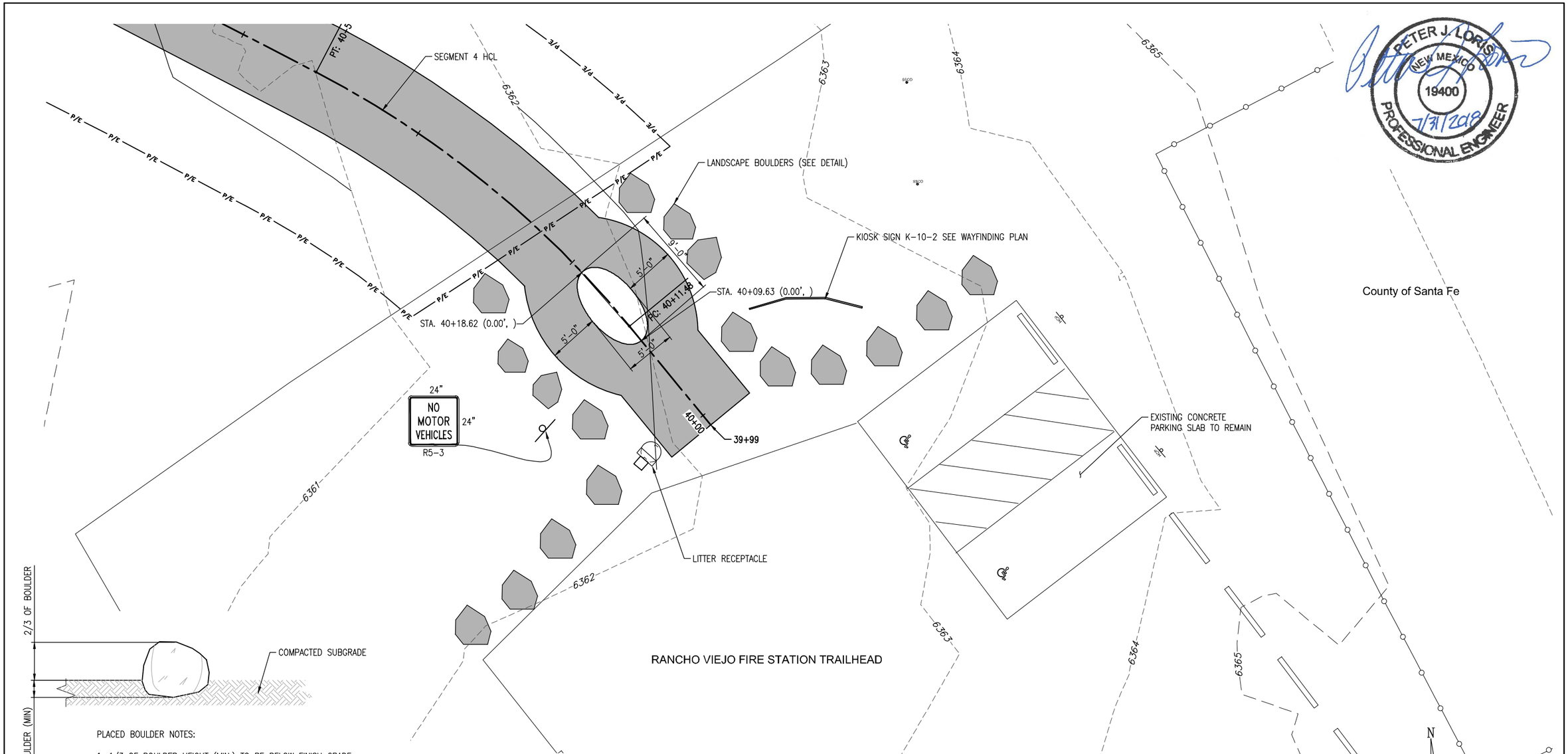

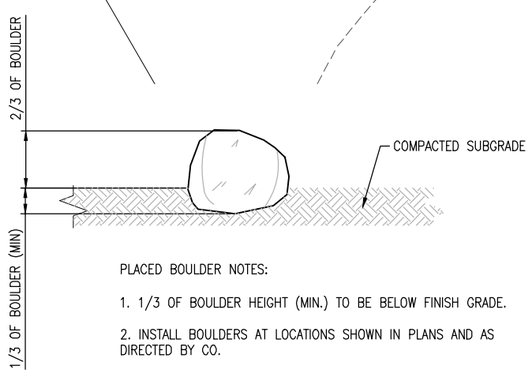

PLACED BOULDER NOTES:

1. 1/3 OF BOULDER HEIGHT (MIN.) TO BE BELOW FINISH GRADE.

2. INSTALL BOULDERS AT LOCATIONS SHOWN IN PLANS AND AS DIRECTED BY CO.

3. MINIMUM BOULDER SIZE IS 2'X2'. BOULDER SIZES MAY RANGE FROM 2' TO 4'.

4. BOULDER MUST BE MADE OF NON-STAINING STONE.

LANDSCAPE BOULDER DETAIL

NOTES;

LITTER RECEPTACLES SHALL 30 GALLON – 32 GALLON STEEL BEAR PROOF CONTAINERS GENERALLY BROWN IN COLOR. THE ACTUAL COLOR SHALL BE SUBMITTED TO THE OWNER FOR APPROVAL PRIOR TO ORDERING. APPROVED PRODUCTS INCLUDE:

1) SEALCOATING. COM 32 GALLON – BEAR PROFF RECEPTACLE:
https://www.sealcoating.com/products/32-gallon-bear-proof-receptacle
2) THEPARKCATALOG.COM 32 GALLON – BEAR PROFF RECEPTACLE:
https://www.theparkcatalog.com/32-gallon-gdg-bear-resistant-trash-receptacle
3) CONSUMER SERVICE ON-LINE PRODUCTS – SINGEL BEAR-PROOF CONTAINER:
https://www.colorado.com/manufacturers/metal/index.html?metal;waste;MCONT.02?5065?PBPFS32C;MPBPFS35C;MPBPFS70G;MPBP95C;MPBPFSC;5559?3

PETER J. LORIS
NEW MEXICO
19400
7/31/2018
PROFESSIONAL ENGINEER

Print Date: Jul 31, 2018	Sheet Revisions			As Constructed	ARROYO HONDO TRAIL TRAILHEAD DETAILS	Project No./Code
File Name: 12126 (29) Trailhead Details.dwg	Date:	Comments	Init.	No Revisions:		Arroyo Hondo Trail
Horiz. Scale: Vert. Scale: As Noted				Revised:	Designer: SJB / Structure Numbers	325-12126
Unit Information Unit Leader Initials				Void:	Detailer: LX / Sheet Subset: TH-01 / Subset Sheets: 1	29

Loris A DIVISION OF OTAK

SANTA FE COUNTY

G:\7.2 Clients\325 – Santa Fe County-NM\12126 – Arroyo Hondo Trail\50 DWG\Segment 4\12126 (29) Trailhead Details.dwg Jul 31, 2018 – 11:30am

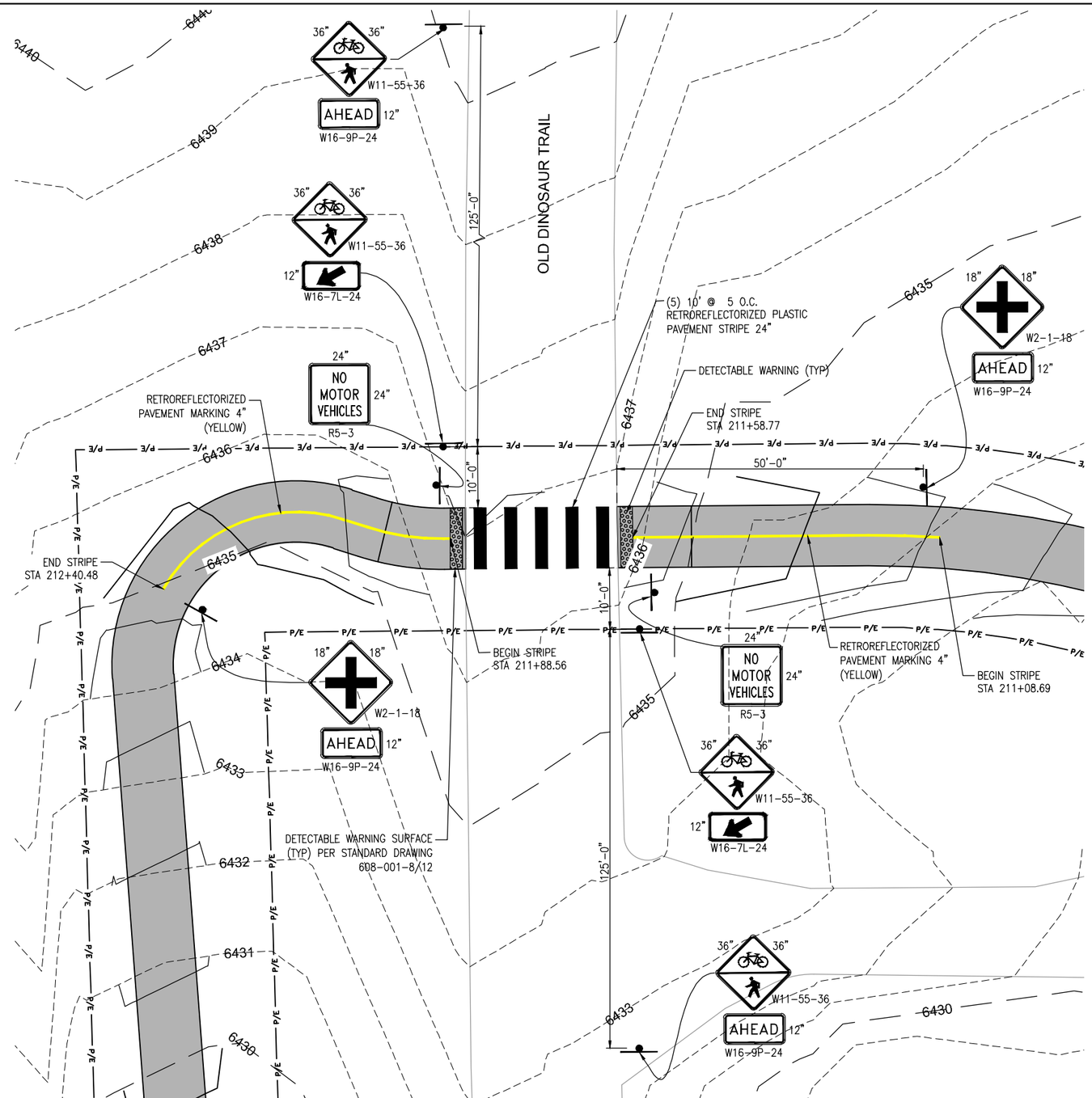

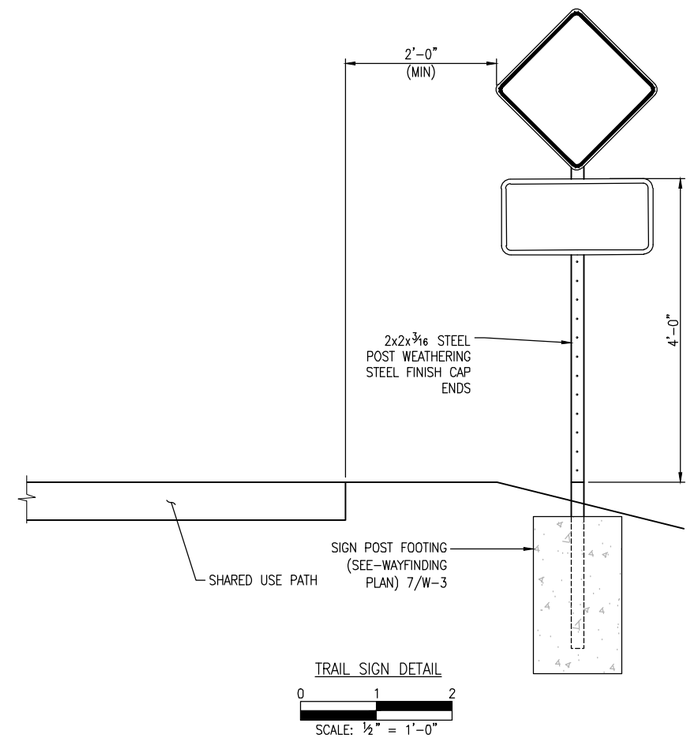

PETER J. LORIS NEW MEXICO 19400 7/31/2018 PROFESSIONAL ENGINEER

G:\7.2 Clients\325 - Santa Fe County-NM\12126 - Arroyo Hondo Trail\50 DWG\Segment 4\12126 (29) At-grade crossing details (Seg4B).dwg Jul 31, 2018 - 11:30am

Print Date: Jul 31, 2018	Sheet Revisions		
File Name: 12126 (29) At-grade crossing details (Seg4B).dwg	Date:	Comments	Init.
Horiz. Scale: Vert. Scale: As Noted			
Unit Information Unit Leader Initials			

Loris — A DIVISION OF OTAK

SANTA FE COUNTY

As Constructed	ARROYO HONDO TRAIL AT-GRADE CROSSING DETAILS (SEGMENT 4B)		Project No./Code
No Revisions:			Arroyo Hondo Trail
Revised:	Designer: SJB	Structure Numbers	325-12126
Void:	Detailer: LX		
	Sheet Subset: AG-01	Subset Sheets: 1	30

STRUCTURAL NOTES:

A. STRUCTURAL DESIGN DATA:

1. CODES AND MANUALS
   - NEW MEXICO STATE DEPARTMENT OF TRANSPORTATION "STANDARD SPECIFICATIONS FOR HIGHWAY AND BRIDGE CONSTRUCTION", 2014
   - "AASHTO LRFD BRIDGE DESIGN SPECIFICATIONS", 8TH EDITION
   - "LRFD GUIDE SPECIFICATIONS FOR THE DESIGN OF PEDESTRIAN BRIDGES", 2009
   - AISC "MANUAL OF STEEL CONSTRUCTION", 14TH EDITION
   - AWS WELDING CODES AS APPLICABLE

2. DESIGN LOADS

DEAD LOAD: ACTUAL WEIGHT OF THE STRUCTURE, PLUS ADDITIONAL DEAD LOADS AS SHOWN
FOUNDATIONS HAVE BEEN DESIGNED BASED ON THE FOLLOWING ASSUMED SUPERSTRUCTURE WEIGHTS, INCLUDING BRIDGE DECK:
BRIDGE 1: 30,875 LB.
BRIDGE 2: 100,750 LB.
ACTUAL BRIDGE LOADS WILL BE REVIEWED WITH THE SHOP DRAWINGS.

LIVE LOAD: PEDESTRIAN LOAD – 90 PSF
TRUCK LOAD – H5=10,000 LB.

WIND LOAD: AASHTO

SEISMIC LOADS:

SPECTRAL RESPONSE ACCELERATIONS	Ss = 0.402
	S1 = 0.133
SPECTRAL RESPONSE COEFFICIENTS	Sds = 0.396
	Sd1 = 0.207
SITE CLASS	D
IMPORTANCE FACTOR	I = 1.0 (RISK CATEGORY II)
SEISMIC DESIGN CATEGORY	C
SEISMIC ZONE	2

EQUIVALENT LATERAL FORCE PROCEDURE
BASIC SEISMIC FORCE RESISTING SYSTEM BY BRIDGE MANUFACTURER

EARTHWORK:

DESIGN BEARING PRESSURE	4000 PSF
DESIGN SIDE SHEAR	1000 PSF
ACTIVE PRESSURE	35 PSF/FT
AT-REST PRESSURE	55 PSF/FT
PASSIVE PRESSURE	800 PSF/FT

B. STRUCTURAL MATERIALS

COMPLY WITH THE NEW MEXICO STATE DEPARTMENT OF TRANSPORTATION "STANDARD SPECIFICATIONS FOR HIGHWAY AND BRIDGE CONSTRUCTION", AND AS FOLLOWS:

1. SUBSTRUCTURE CONCRETE CLASS A (511300) – f'c=4,000 PSI AT 28 DAYS (SUBSTRUCTURES)
2. STRUCTURAL CONCRETE CLASS G (511060) – f'c=3,000 PSI AT 28 DAYS (DRILLED SHAFTS)
3. HIGH PERFORMANCE CONCRETE (HPD) (512003) – f'c = 4,000 PSI AT 28 DAYS (APPROACH SLABS & BRIDGE DECKS)
4. REINFORCING STEEL – fy=60,000 PSI
5. WIDE FLANGE STEEL SHAPES: ASTM A992, FY = 50 KSI
6. STEEL TUBE SHAPES: ASTM A847, FY = 50 KSI
7. STEEL PLATES: ASTM A588, GRADE B, FY = 50 KSI

C. PRE-ENGINEERED BRIDGE:

1. BRIDGE SHALL BE DESIGNED, DETAILED AND FABRICATED BY MANUFACTURER EXPERIENCED IN THE PRODUCTION OF PREFABRICATED BRIDGES AND IN ACCORDANCE WITH REQUIREMENTS AS INDICATED IN THE CONSTRUCTION DOCUMENTS.
2. REFER TO BRIDGE DESCRIPTION TABLE (ON GENERAL LAYOUT SHEETS) FOR EACH OF THE BRIDGE'S DESIGN INFORMATION.
3. ANCHOR BOLTS FOR BRIDGES SHALL BE PROVIDED AND INSTALLED BY THE CONTRACTOR.
4. THE ABUTMENT DIMENSION DEPICTED AS "STEP" IS DEFINED AS THE DISTANCE FROM FINISHED DECK SURFACE TO CONCRETE BEARING SEAT ELEVATION. ANY CHANGE TO THE STEP DIMENSION SHALL BE SUBMITTED TO THE ENGINEER FOR APPROVAL, PRIOR TO CONSTRUCTION.
5. SUBMIT FOR REVIEW COMPLETE DESIGN CALCULATIONS STAMPED BY AN ENGINEER REGISTERED IN THE STATE OF NEW MEXICO INDICATING THAT BRIDGE HAS BEEN DESIGNED TO ALL APPLICABLE REQUIREMENTS.
6. SUBMIT FOR REVIEW COMPLETE SHOP DRAWINGS INDICATING SIZES AND SHAPES, CONNECTION DETAILS, ETC. FOR THE PREFABRICATED BRIDGE STRUCTURE.
7. PROVIDE PRIMING AND FINISHES FOR ALL BRIDGE COMPONENTS AS INDICATED.
8. SLIP PADS OF ULTRA HIGH MOLECULAR WEIGHT (UHMW) POLYETHYLENE, OR OTHER APPROVED MATERIAL, SHALL BE PLACED BETWEEN THE SMOOTH SURFACE OF THE SETTING LATE AND THE SMOOTH BEARING PLATE OF THE BRIDGE.

D. CONCRETE NOTES:

1. HOT WEATHER AND COLD WEATHER CONCRETING OPERATIONS SHALL BE PERFORMED IN ACCORDANCE WITH NMDOT "STANDARD SPECIFICATIONS FOR HIGHWAY AND BRIDGE CONSTRUCTION" SECTION 511.
2. ALL REINFORCING STEEL FOR HIGH PERFORMANCE CONCRETE (HPD) SHALL BE EPOXY COATED REINFORCING BARS GRADE 60. ALL REINFORCING STEEL FOR SUBSTRUCTURE CONCRETE CLASS A SHALL BE BLACK REINFORCING BARS GRADE 60.

   THE FOLLOWING TABLE GIVES THE MINIMUM REINFORCING BAR LAP SPLICE LENGTH FOR CLASS A SPLICES:

BAR SIZE	#4	#5	#6	#7	#8	#9	#10	#11
SUBSTRUCTURE CONCRETE CLASS A:	1'-1"	1'-4"	1'-7"	1'-11"	2'-6"	3'-1"	3'-11"	4'-10"
HIGH PERFORMANCE CONCRETE (HPD):	1'-3"	1'-7"	2'-5"	2'-10"	3'-8"	4'-8"	5'-11	7'-3"

3. STAGGER SPLICES ONE SPLICE LENGTH WHERE POSSIBLE.
4. ALL EXPOSED CONCRETE EDGES SHALL HAVE A ¾" CHAMFER, UNLESS DESIGNATED OTHERWISE ON THE PLANS.
5. ALL REINFORCING STEEL SHALL HAVE 2" OF COVER OR 3" IF CONCRETE IS CAST AGAINST AND PERMANENTLY EXPOSED TO WEATHER, UNLESS DESIGNATED OTHERWISE ON PLANS.
6. ALL CONSTRUCTION JOINTS SHALL BE THOROUGHLY CLEANED BEFORE FRESH CONCRETE IS POURED.
7. ALL EXPOSED CONCRETE SURFACES SHALL RECEIVE A CLASS 4 FINISH COLOR SHALL MATCH THE COLOR OF THE CONCRETE SIDEWALK (COLORED) (FEDERAL COLOR 30450) PAYMENT FOR CLASS 4 FINISH SHALL BE INCLUDED IN THE COST OF THE CONCRETE.

E. FOUNDATION NOTES:

1. EXCAVATION AND FILL: ALL FILL, FROM ON-SITE OR IMPORTED FROM OFF-SITE, SHALL BE TESTED AND APPROVED BY THE OWNER PRIOR TO USE IN EMBANKMENT ON THE PROJECT. THE MATERIAL SHALL CONSIST OF NON-EXPANSIVE, GRANULAR FILL.
2. GEOTECHNICAL REPORT: STRUCTURAL FOUNDATION DESIGN FOR THIS PROJECT IS BASED ON THE RECOMMENDATIONS OF A GEOTECHNICAL INVESTIGATION BY GEO-TEST, INC., DATED NOVEMBER 25, 2016; FILE NO. 1-60813. THE CONTRACTOR SHALL BE FAMILIARIZED WITH THE REQUIREMENTS OF THIS REPORT.
3. DEWATERING WILL NOT BE PAID FOR SEPARATELY BUT SHALL BE INCLUDED IN THE WORK.
4. THE CONTRACTOR SHALL OBTAIN A CONSTRUCTION DEWATERING PERMIT FROM THE NMED FOR ANY DEWATERING OF GROUNDWATER DURING CONSTRUCTION IN ACCORDANCE WITH WATER QUALITY CONTROL COMMISSION (WQCC) REQUIREMENTS. THE CONTRACTOR SHALL APPLY FOR THIS PERMIT AT LEAST 30 DAYS PRIOR TO THE START OF DISCHARGE. THIS SHALL INCLUDE, BUT NOT BE LIMITED TO ALL TEMPORARY DIVERSIONS AND DEWATERING TO REMOVE EXISTING ABUTMENTS AND CONSTRUCT NEW ABUTMENTS AND SUBSTRUCTURES. ALL COSTS FOR OBTAINING THE PERMIT AND DEWATERING DEVICES SHALL BE INCLUDED IN THE WORK.

F. UTILITY NOTES:

1. THE INFORMATION SHOWN ON THESE PLANS CONCERNING THE TYPE AND LOCATION OF UNDER GROUND UTILITIES IS NOT GUARANTEED TO BE ACCURATE OR ALL INCLUSIVE. THE CONTRACTOR IS RESPONSIBLE FOR MAKING HIS OWN DETERMINATION AS TO THE TYPE AND LOCATION OF UNDERGROUND UTILITIES AS MAY BE NECESSARY TO AVOID DAMAGE THERETO. THE CONTRACTOR SHALL CONTACT NEW MEXICO 811 DAMAGE PREVENTION CENTER AT 811 AT LEAST 2 DAYS (NOT INCLUDING THE DAY OF NOTIFICATION) PRIOR TO ANY EXCAVATION OR OTHER EARTHWORK.

PETER J. LORIS
NEW MEXICO
19400
7/31/2018
PROFESSIONAL ENGINEER

ABBREVIATIONS TABLE

AASHTO	ASSOCIATION OF STATE HIGHWAY AND TRANSPORTATION OFFICIALS	CL / ℄	CENTER LINE	FES	FLARED END SECTION	LP	LIGHT POLE	PROP	PROPOSED	T	TELEPHONE
		CLR	CLEAR	FF	FINISH FLOOR / FRONT FACE	LT	LEFT / LIGHT	PRV	PRESSURE REDUCING VALVE / PRESSURE RELIEF VALVE	TAN	TANGENT
ABAN	ABANDON	CO	CLEAN OUT	FG	FINISH GRADE	MAINT	MAINTENANCE			TBC	TOP BACK OF CURB
ABC	AGGREGATE BASE COURSE	COM	COMMUNICATION	FH	FIRE HYDRANT	MAS	MASONRY	PSF	POUNDS PER SQUARE FOOT	TEMP	TEMPORARY
ABUT	ABUTMENT	CONC	CONCRETE	FL	FLOW LINE	MATL	MATERIAL	PSI	POUNDS PER SQUARE INCH	TOC	TOP OF CONCRETE / TOP OF CURB
ALT	ALTERNATE	CONST	CONSTRUCTION	FN	FENCE	MAX	MAXIMUM	PT	POINT OF TANGENCY	TOW	TOP OF WALL
AMT	AMOUNT	CONT	CONTINUOUS(ATION)	FPS	FEET PER SECOND	MB	MAIL BOX	PVC	POINT OF VERTICAL CURVE / POLYVINYL CHLORIDE	TYP	TYPICAL
APPROX	APPROXIMATE	COR	CORNER	FT	FEET	MECH	MECHANICAL			UBC	UNIFORM BUILDING CODE
ASPH	ASPHALT	CP	CONTROL POINT	FTG	FOOTING / FITTING	MFR	MANUFACTURER	PVMT	PAVEMENT	UE	UNDERGROUND ELECTRICAL
ASTM	AMERICAN SOCIETY FOR TESTING AND MATERIALS	CY	CUBIC YARDS	G	GAS	MH	MANHOLE	QTY	QUANTITY	UNO	UNLESS NOTED OTHERWISE
		DEMO	DEMOLITION	GA	GAUGE	MIN	MINIMUM	R/RAD	RADIUS	VERT	VERTICAL
AVG	AVERAGE	DET	DETAIL	GAL	GALLON	MISC	MISCELLANEOUS	RCP	REINFORCED CONCRETE PIPE	W	WIDE / WIDTH / WATER
AWWA	AMERICAN WATER WORKS ASSOCIATION	DIA	DIAMETER	GALV	GALVANIZED	MJ	MECHANICAL JOINT	RE/REF	REFERENCE	w/	WITH
BF	BACK FACE	DIP	DUCTILE IRON PIPE	GND	GROUND	NA	NOT APPLICABLE	REINF	REINFORCED (D) (ING) (MENT)	w/o	WITH OUT
BFV	BUTTERFLY VALVE	DWG	DRAWING	GPD	GALLONS PER DAY	NPT	NATIONAL PIPE THREAD	REQD	REQUIRED	WWF	WELDED WIRE FABRIC
BLDG	BUILDING	EA	EACH	GPM	GALLONS PER MINUTE	NTS	NOT TO SCALE	ROW	RIGHT OF WAY	X	SECTION
BM	BENCH MARK	EF	EACH FACE	GRTG	GRATING	NWL	NORMAL WATER LINE	RT	RIGHT		
BMP	BEST MANAGEMENT PRACTICE	EJ	EXPANSION JOINT	GV	GATE VALVE	OC	ON CENTER	SAN	SANITARY		
BOC	BACK OF CURB	EL/ELEV	ELEVATION	HCL	HORIZONTAL CONTROL LINE	OD	OUTSIDE DIAMETER	SD	STORM DRAIN	@	AT
BOF	BOTTOM OF FOOTING	ELEC	ELECTRICAL	HMA	HOT MIX ASPHALT	OH	OVERHEAD	SF	SQUARE FOOT	(CIP)	COMPLETE (CAST) IN PLACE
BOW	BACK OF WALK / BOTTOM OF WALL	ENGR	ENGINEER	HORIZ	HORIZONTAL	OHE	OVERHEAD ELECTRIC	SHT	SHEET		
BRG	BEARING	EOP	EDGE OF PAVEMENT	HP	HIGH POINT	PC	POINT OF CURVATURE	SPA	SPACING/SPACES		
BS	BACKSIGHT	EOTW	EDGE OF TRAVELED WAY	HVAC	HEATING, VENTILATION, AIR CONDITIONING	PEJF	PREFORMED EXPANSION JOINT FILLER	SPEC	SPECIFICATION		
C&G	CURB AND GUTTER	EQ	EQUAL	HWL	HIGH WATER LINE	PGL	PROFILE GRADE LINE	STA	STATION		
C/C	CENTER TO CENTER	EQUIP	EQUIPMENT	HWY	HIGHWAY	PI	POINT OF INTERSECTION	STD	STANDARD		
CB	CATCH BASIN	EQUIV	EQUIVALENT	ID	INSIDE DIAMETER	PL	PROPERTY LINE	STL	STEEL		
CDOT	COLORADO DEPARTMENT OF TRANSPORTATION	ESMT	EASEMENT	INV	INVERT	PP	POWER POLE	STM	STEAM	N	NORTH
		EST	ESTIMATE	INV EL	INVERT ELEVATION	PREFAB	PREFABRICATED	SWMP	STORM WATER MANAGEMENT PLAN	S	SOUTH
CFS	CUBIT FEET PER SECOND	EXI	EXISTING	IRR	IRRIGATION	PRELIM	PRELIMINARY	SY	SQUARE YARD	E	EAST
CJ	CONSTRUCTION JOINT / CONTROL JOINT	FD	FOUNDATION DRAIN	LF	LINEAR FOOT	PREP	PREPARATION	SYM	SYMMETRICAL	W	WEST

Print Date: Jul 31, 2018	Sheet Revisions		
File Name: 12126 (30) Bridge General Notes.dwg	Date:	Comments	Init.
Horiz. Scale: Vert. Scale: As Noted			
Unit Information Unit Leader Initials			

Loris
A DIVISION OF OTAK

SANTA FE COUNTY

As Constructed
No Revisions:
Revised:
Void:

ARROYO HONDO TRAIL
BRIDGE GENERAL INFORMATION

Designer:	SJB	Structure Numbers	
Detailer:	LX		
Sheet Subset:	B-01	Subset Sheets:	6

Project No./Code
Arroyo Hondo Trail
325-12126

G:\7.2 Clients\325 – Santa Fe County–NM\12126 – Arroyo Hondo Trail\50 DWG\Segment 4\12126 (30) Bridge General Notes.dwg Jul 31, 2018 – 11:30am

BRIDGE #1 DESIGN INFORMATION	
OVERALL LENGTH ■	35'–0"
CLEAR WIDTH	10'–0"
CORROSION PROTECTION	WEATHERING STEEL
CAMBER	NONE
LIVE LOAD	AASHTO*
VEHICLE LOAD	AASHTO*
WIND LOAD	AASHTO*
SEISMIC ZONE	1
RUB RAILS	NONE
TOE PLATE	STEEL
RAIL HEIGHT	3'–6"
DECKING	CONCRETE
TRUSS TYPE ♦	MODIFIED BOW
STEP ▼	1'–6" MAX
BREAKAWAY DEVICE	NO
CLOSURE PLATE	YES

* AASHTO LRFD GUIDE SPECIFICATIONS FOR THE DESIGN OF PEDESTRIAN BRIDGES

■ MEASURED AT CENTERLINE OF STRUCTURE

▼ MAXIMUM PERMISSIBLE MEASURED FROM TOP OF DECK TO BEARING SURFACE. COORDINATE FINAL DIMENSION WITH BRIDGE SHOP DRAWINGS

♦ TRUSS HEIGHT SHALL BE 2' TALLER AT THE MID-SPAN

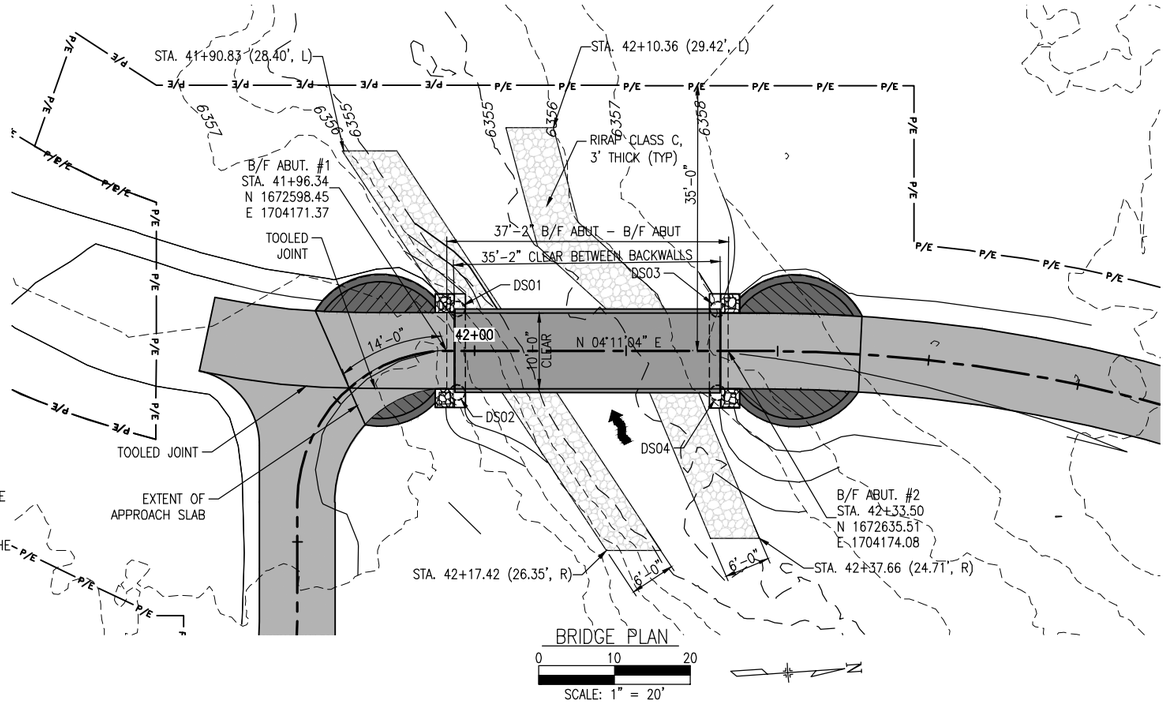

BRIDGE PLAN

0 10 20

SCALE: 1" = 20'

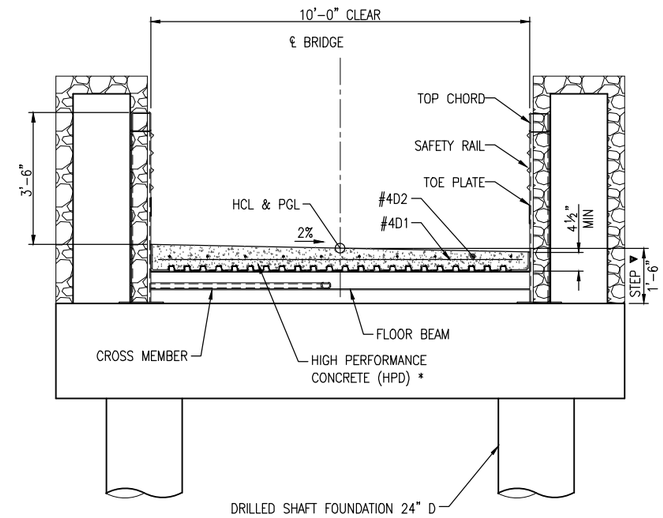

BRIDGE SECTION
(LOOKING UP STATION)

* PROVIDE TRANSVERSE CONTRACTION JOINTS COINCIDENTAL WITH VERTICAL TRUSS MEMBERS.

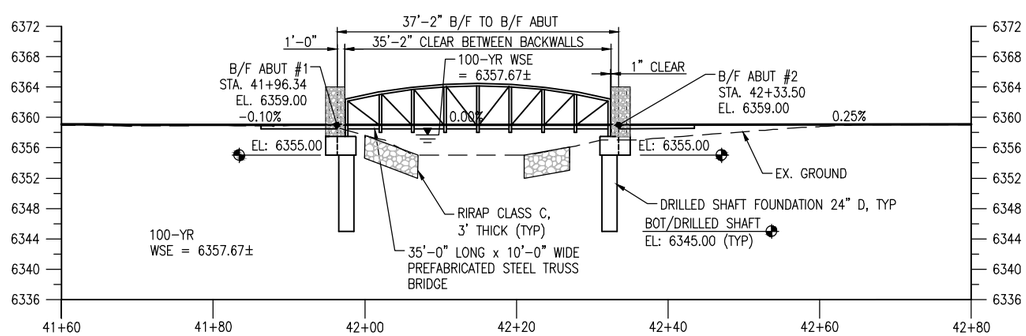

BRIDGE ELEVATION

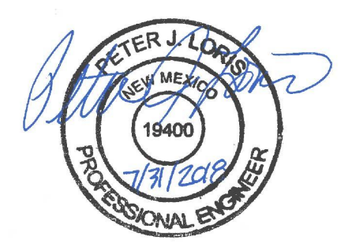

Print Date: Jul 31, 2018	Sheet Revisions			As Constructed	ARROYO HONDO TRAIL BRIDGE #1 GENERAL LAYOUT	Project No./Code
File Name: 12126 (31–32) Bridge General Layout (Seg4).dwg	Date:	Comments	Init.	No Revisions:		Arroyo Hondo Trail
Horiz. Scale: Vert. Scale: As Noted				Revised:	Designer: SJB / Structure Numbers	325–12126
Unit Information Unit Leader Initials				Void:	Detailer: LX / Sheet Subset: B–02 / Subset Sheets: 6	32

Loris A DIVISION OF OTAK

SANTA FE COUNTY

G:\7.2 Clients\325 – Santa Fe County–NM\12126 – Arroyo Hondo Trail\50 DWG\Segment 4\12126 (31–32) Bridge General Layout (Seg4).dwg Jul 31, 2018 – 11:31am

BRIDGE #2 DESIGN INFORMATION	
OVERALL LENGTH ■	110'–0"
CLEAR WIDTH	10'–0"
CORROSION PROTECTION	WEATHERING STEEL
CAMBER	NONE
LIVE LOAD	AASHTO*
VEHICLE LOAD	AASHTO*
WIND LOAD	AASHTO*
SEISMIC ZONE	1
RUB RAILS	NONE
TOE PLATE	STEEL
RAIL HEIGHT	3'–6" MIN
DECKING	CONCRETE
TRUSS TYPE ◆	MODIFIED BOW
STEP ▼	2'–6"
BREAKAWAY DEVICE	NO
CLOSURE PLATE	YES

* AASHTO LRFD GUIDE SPECIFICATIONS FOR THE DESIGN OF PEDESTRIAN BRIDGES

■ MEASURED AT CENTERLINE OF STRUCTURE

▼ MAXIMUM PERMISSIBLE MEASURED FROM TOP OF DECK TO BEARING SURFACE. COORDINATE FINAL DIMENSION WITH BRIDGE SHOP DRAWINGS

◆ TRUSS HEIGHT SHALL BE 3' TALLER AT THE MID–SPAN

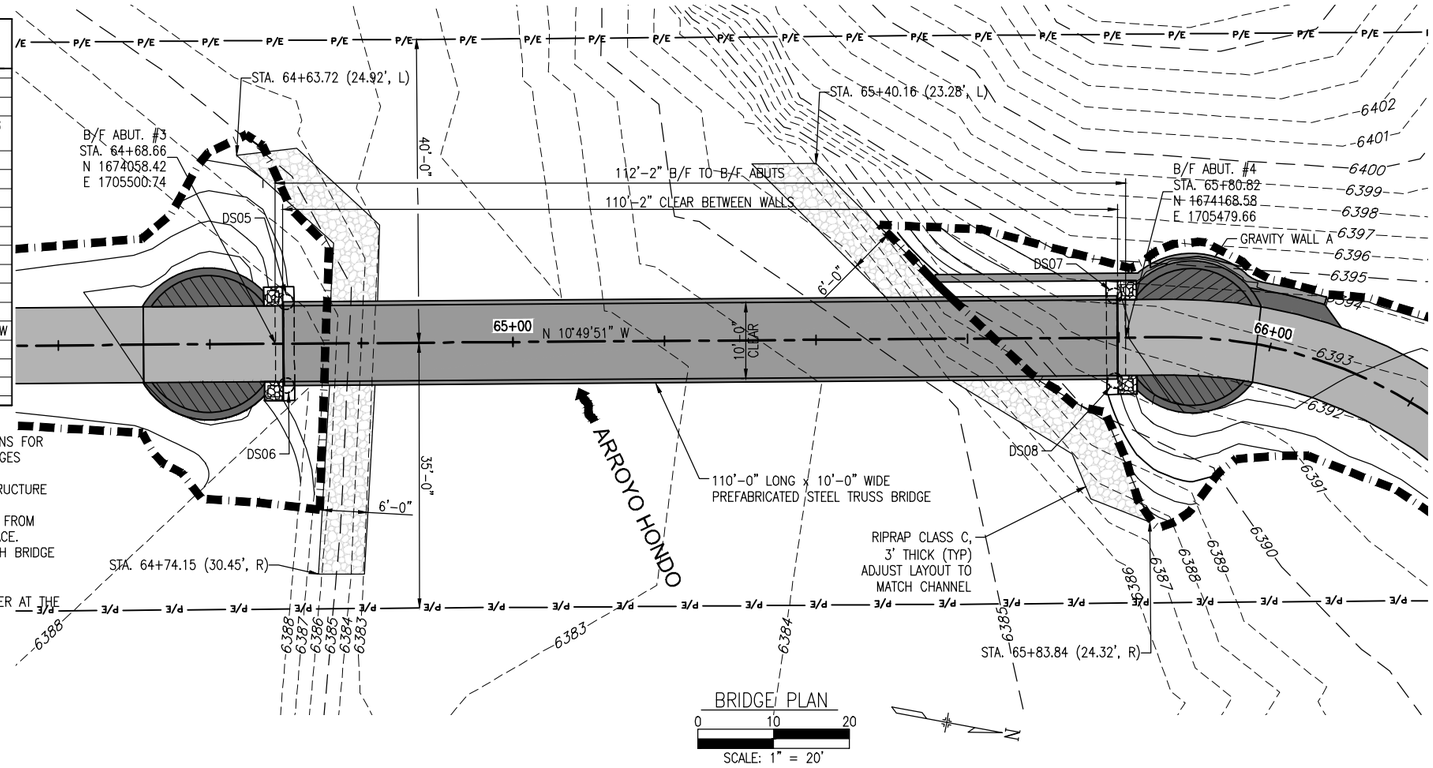

BRIDGE PLAN

0 10 20

SCALE: 1" = 20'

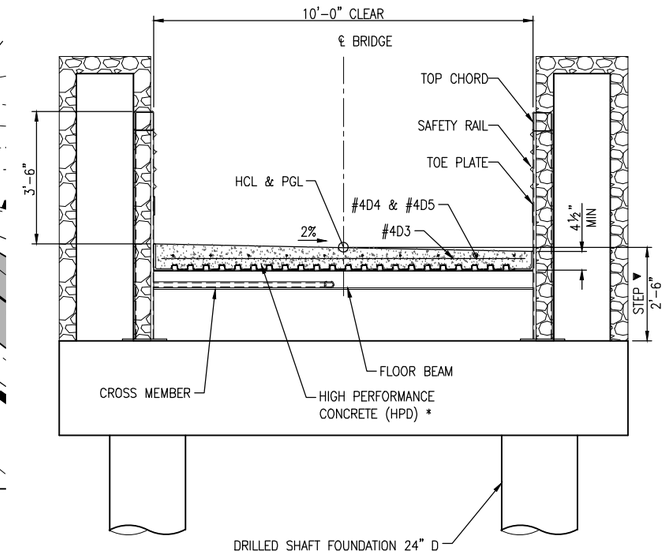

BRIDGE SECTION
(LOOKING UP STATION)

* PROVIDE TRANSVERSE CONTRACTION JOINTS COINCIDENTAL WITH VERTICAL TRUSS MEMBERS.

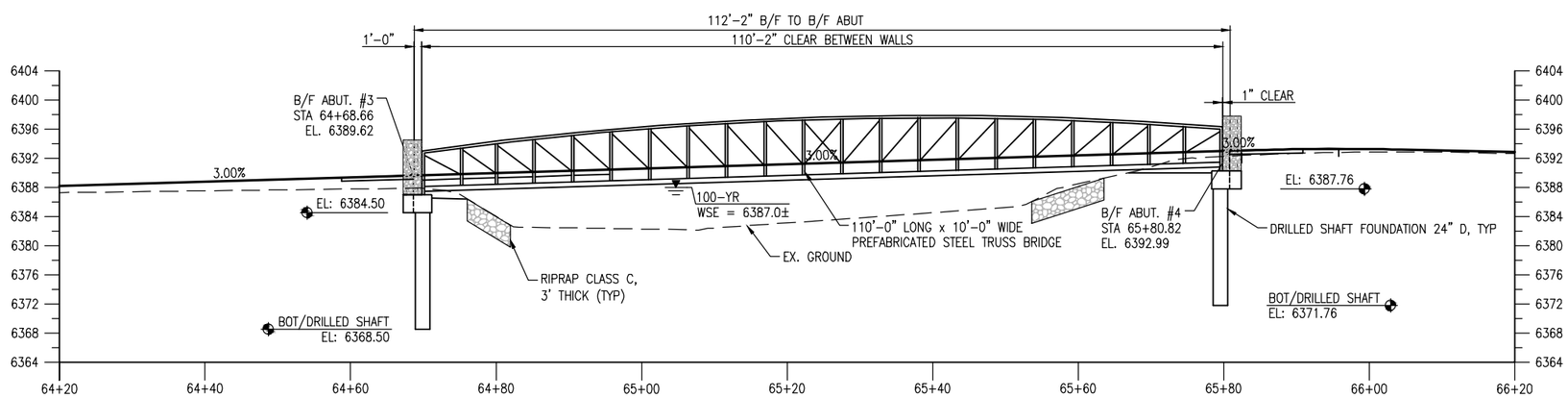

BRIDGE ELEVATION

PETER J. LORIS
NEW MEXICO
19400
7/31/2018
PROFESSIONAL ENGINEER

Print Date: Jul 31, 2018	Sheet Revisions			
File Name: 12126 (31–32) Bridge General Layout (Seg4).dwg	Date:	Comments	Init.	
Horiz. Scale: Vert. Scale: As Noted				
Unit Information Unit Leader Initials				

Loris — A DIVISION OF OTAK

SANTA FE COUNTY

As Constructed	ARROYO HONDO TRAIL BRIDGE #2 GENERAL LAYOUT		Project No./Code
No Revisions:			Arroyo Hondo Trail
Revised:	Designer: SJB	Structure Numbers	325–12126
Void:	Detailer: LX		
	Sheet Subset: B–03	Subset Sheets: 6	33

G:\7.2 Clients\325 – Santa Fe County–NM\12126 – Arroyo Hondo Trail\50 DWG\Segment 4\12126 (31–32) Bridge General Layout (Seg4).dwg Jul 31, 2018 – 11:31am

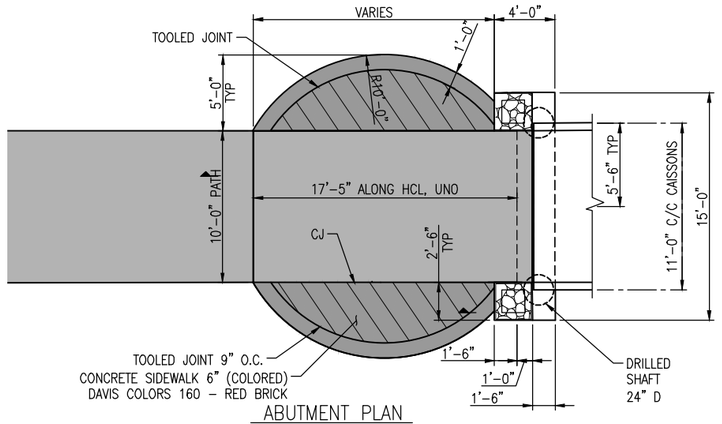

ABUTMENT PLAN

0 4 8

SCALE: ⅛" = 1'-0"

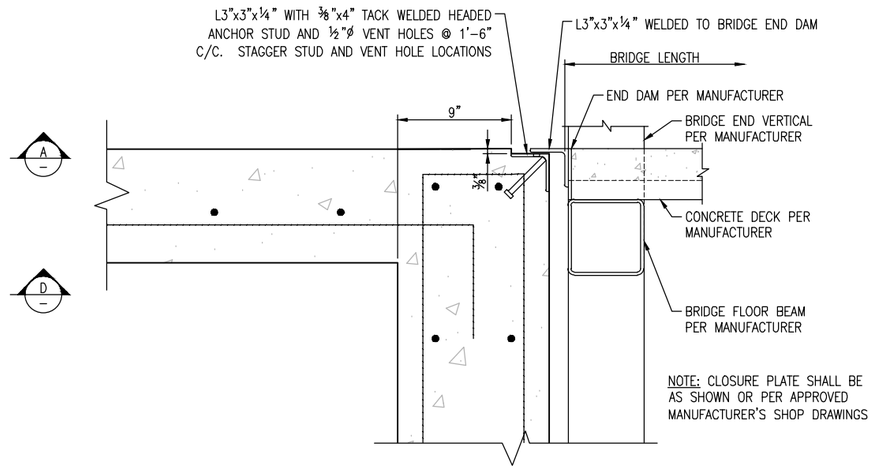

B CLOSURE PLATE DETAIL

0 ½ 1

SCALE: 1" = 1'-0"

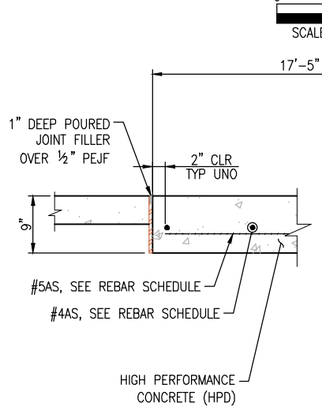

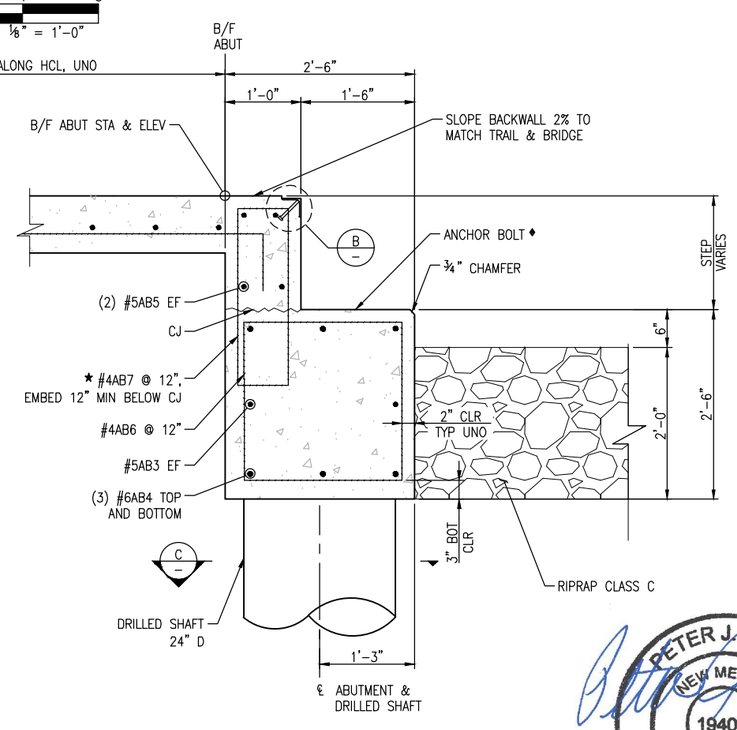

★ ADJUST VERTICAL LEG PER ACTUAL STEP DIMENSION

♦ (2) 1"Ø ASTM A307, GRADE A, GALV. ANCHOR BOLT PER BEARING. COORDINATE LOCATION WITH BRIDGE MANUFACTURER

A ABUTMENT SECTION

0 1 2

SCALE: ½" = 1'-0"

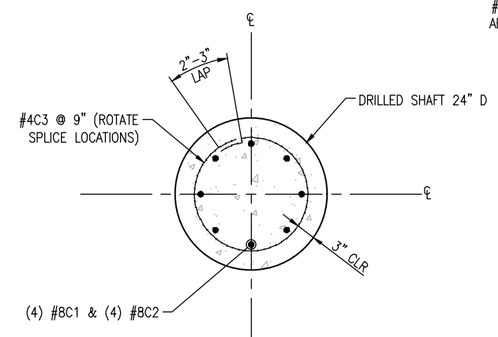

C TYPICAL CAISSON

0 1 2

SCALE: ½" = 1'-0"

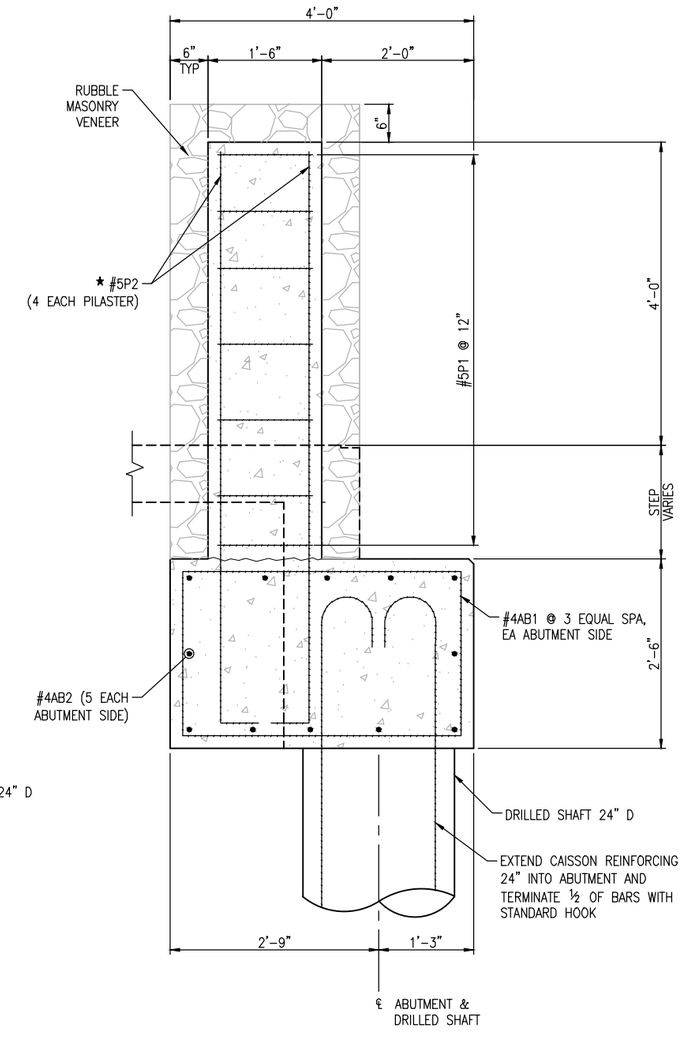

D ABUTMENT SECTION @ PILASTER

0 1 2

SCALE: ½" = 1'-0"

* TOP OF FINISH COLUMN SHALL BE A MINIMUM OF 1' ABOVE TOP OF BRIDGE RAIL

PETER J. LORIS NEW MEXICO 19400 7/31/2018 PROFESSIONAL ENGINEER

Print Date: Jul 31, 2018	Sheet Revisions			As Constructed	ARROYO HONDO TRAIL BRIDGE DETAILS	Project No./Code
File Name: 12126 (33) Bridge Details.dwg	Date:	Comments	Init.	No Revisions:		Arroyo Hondo Trail
Horiz. Scale: Vert. Scale: As Noted				Revised:	Designer: SJB / Structure Numbers	325–12126
Unit Information Unit Leader Initials				Void:	Detailer: DG / Sheet Subset: B-04 / Subset Sheets: 6	34

Loris A DIVISION OF OTAK

SANTA FE COUNTY

G:\7.2 Clients\325 – Santa Fe County–NM\12126 – Arroyo Hondo Trail\50 DWG\Segment 4\12126 (33) Bridge Details.dwg Jul 31, 2018 – 11:31am

Mark	Multiplier	Size	Type	Length	No. Req'd	Remarks
Bridge Deck						
#4D1		4	1	9'-8"	36	
#4D2		4	1	34'-8"	11	
Pilasters						
#4P1	4	4	3		7	a = 1'-2", b = 1'-2", R = 1"
#5P2	4	5	2		4	a = 7'-1", b = 0'-10, R = 1 7/8"
Pilaster Abutment						
#4AB1	4	4	3		4	a = 3'-8", b = 2'-1", R = 1"
#4AB2	4	4	1	2'-2"	5	
#5AB3	2	5	1	14'-8"	2	
#6AB4	2	6	1	14'-8"	6	
#5AB5	2	5	1	14'-8"	4	
#4AB6	2	4	3		12	a = 2'-2", b = 2'-1", R = 1"
#5AB7	2	5	3		11	a = 0'-8", b = 2'-4", R = 1 1/4"
Caisson						
#8C1	4	8	1	12'-0"	4	
#8C2	4	8	5		4	a = 12'-0"
#4C3	4	4	6		14	a = 0'-3", R = 0'-9"
Approach Slab						
#4AS101		4	15		1	a = 2'-6", b = 15'-11", c = 2'-6", d = 0'-0", θ_1 = 120°, θ_2 = 120°
#4AS102		4	1	17'-1"	1	
#4AS103		4	1	17'-10"	1	
#4AS104		4	1	18'-6"	1	
#4AS105		4	1	18'-11"	1	
#4AS106		4	1	19'-4"	1	
#4AS107		4	1	19'-6"	1	
#4AS108		4	1	19'-8"	1	
#4AS109		4	1	19'-8"	1	
#4AS110		4	1	19'-6"	1	
#4AS111		4	1	19'-4"	1	
#4AS112		4	1	18'-11"	1	
#4AS113		4	1	18'-6"	1	
#4AS114		4	1	17'-10"	1	
#4AS115		4	1	17'-1"	1	
#4AS116		4	1	16'-2"	1	
#4AS117		4	1	15'-0"	1	
#4AS118		4	15		1	a = 2'-0", b = 13'-8", c = 2'-0", d = 0'-0", θ_1 = 130°, θ_2 = 130°
#4AS119		4	1	9'-8"	1	
#4AS120		4	1	9'-8"	1	
#4AS121		4	1	7'-6"	1	
#4AS122		4	1	11'-2"	1	
#4AS123		4	1	13'-8"	1	
#4AS124		4	1	14'-9"	1	
#4AS125		4	1	15'-5"	1	
#5AS126		5	2		1	a = 17'-6", b = 0'-10", R = 1 7/8"
#5AS127		5	2		1	a = 17'-3", b = 0'-10", R = 1 7/8"
#5AS128		5	2		1	a = 17'-0", b = 0'-10", R = 1 7/8"
#5AS129		5	2		1	a = 16'-10", b = 0'-10", R = 1 7/8"
#5AS130		5	2		1	a = 16'-7", b = 0'-10", R = 1 7/8"
#5AS131		5	2		1	a = 16'-4", b = 0'-10", R = 1 7/8"
#5AS132		5	2		1	a = 16'-2", b = 0'-10", R = 1 7/8"
#5AS133		5	2		1	a = 15'-11", b = 0'-10", R = 1 7/8"
#5AS134		5	2		1	a = 15'-9", b = 0'-10", R = 1 7/8"
#5AS135		5	2		1	a = 15'-6", b = 0'-10", R = 1 7/8"
#5AS136		5	2		1	a = 15'-3", b = 0'-10", R = 1 7/8"
#5AS137		5	2		1	a = 15'-1", b = 0'-10", R = 1 7/8"
#5AS138		5	2		1	a = 14'-10", b = 0'-10", R = 1 7/8"
#5AS139		5	2		1	a = 14'-7", b = 0'-10", R = 1 7/8"
#5AS140		5	2		1	a = 14'-5", b = 0'-10", R = 1 7/8"
#5AS141		5	2		1	a = 14'-2", b = 0'-10", R = 1 7/8"
#5AS142		5	2		1	a = 13'-11", b = 0'-10", R = 1 7/8"
#5AS143		5	2		1	a = 13'-9", b = 0'-10", R = 1 7/8"
#5AS144		5	2		1	a = 13'-6", b = 0'-10", R = 1 7/8"
#5AS145		5	2		1	a = 13'-3", b = 0'-10", R = 1 7/8"
#5AS146		5	1	9'-5"	1	
#5AS147		5	1	7'-7"	1	
#5AS148		5	1	6'-2"	1	
#5AS149		5	1	4'-11"	1	
#5AS150		5	1	3'-11"	1	
#5AS151		5	1	2'-11"	1	
#5AS152		5	1	2'-1"	1	
#5AS153		5	1	1'-3"	1	
#4AS154		4	1	1'-2"	1	
#4AS155		4	1	4'-1"	1	
#4AS156		4	1	5'-2"	1	
#4AS157		4	1	5'-2"	1	
#4AS158		4	1	3'-11"	1	

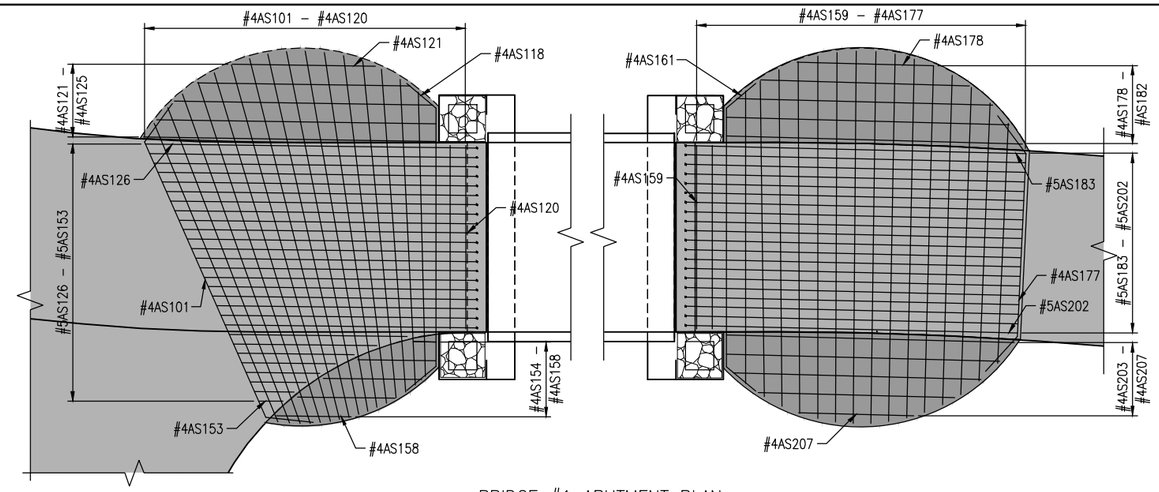

BRIDGE #1 ABUTMENT PLAN

0 4 8

SCALE: 1/8" = 1'-0"

N

Mark	Multiplier	Size	Type	Length	No. Req'd	Remarks
#4AS159		4	1	9'-8"	1	
#4AS160		4	1	9'-8"	1	
#4AS161		4	15		1	a = 2'-0", b = 13'-8", c = 2'-0", d = 0'-0", θ_1 = 130°, θ_2 = 130°
#4AS162		4	1	15'-6"	1	
#4AS163		4	1	16'-8"	1	
#4AS164		4	1	17'-9"	1	
#4AS165		4	1	18'-7"	1	
#4AS166		4	1	19'-2"	1	
#4AS167		4	1	19'-6"	1	
#4AS168		4	1	19'-8"	1	
#4AS169		4	1	19'-7"	1	
#4AS170		4	1	19'-5"	1	
#4AS171		4	1	19'-0"	1	
#4AS172		4	1	18'-4"	1	
#4AS173		4	1	17'-5"	1	
#4AS174		4	1	16'-3"	1	
#4AS175		4	1	14'-8"	1	
#4AS176		4	1	12'-8"	1	
#4AS177		4	15		1	a = 2'-6", b = 9'-8", c = 2'-6", d = 0'-0", θ_1 = 140°, θ_2 = 140°
#4AS178		4	1	7'-2"	1	
#4AS179		4	1	11'-0"	1	
#4AS180		4	1	13'-6"	1	
#4AS181		4	1	14'-11"	1	
#4AS182		4	1	15'-7"	1	
#5AS183		5	2		1	a = 18'-0", b = 0'-10", R = 1 7/8"
#5AS184		5	2		1	a = 17'-11", b = 0'-10", R = 1 7/8"
#5AS185		5	2		1	a = 17'-11", b = 0'-10", R = 1 7/8"
#5AS186		5	2		1	a = 17'-11", b = 0'-10", R = 1 7/8"
#5AS187		5	2		1	a = 17'-10", b = 0'-10", R = 1 7/8"
#5AS188		5	2		1	a = 17'-10", b = 0'-10", R = 1 7/8"
#5AS189		5	2		1	a = 17'-10", b = 0'-10", R = 1 7/8"
#5AS190		5	2		1	a = 17'-10", b = 0'-10", R = 1 7/8"
#5AS191		5	2		1	a = 17'-9", b = 0'-10", R = 1 7/8"
#5AS192		5	2		1	a = 17'-9", b = 0'-10", R = 1 7/8"
#5AS193		5	2		1	a = 17'-9", b = 0'-10", R = 1 7/8"
#5AS194		5	2		1	a = 17'-8", b = 0'-10", R = 1 7/8"
#5AS195		5	2		1	a = 17'-8", b = 0'-10", R = 1 7/8"
#5AS196		5	2		1	a = 17'-8", b = 0'-10", R = 1 7/8"
#5AS197		5	2		1	a = 17'-8", b = 0'-10", R = 1 7/8"
#5AS198		5	2		1	a = 17'-7", b = 0'-10", R = 1 7/8"
#5AS199		5	2		1	a = 17'-7", b = 0'-10", R = 1 7/8"
#5AS200		5	2		1	a = 17'-7", b = 0'-10", R = 1 7/8"
#5AS201		5	2		1	a = 17'-6", b = 0'-10", R = 1 7/8"
#5AS202		5	2		1	a = 17'-6", b = 0'-10", R = 1 7/8"
#4AS203		4	1	15'-2"	1	
#4AS204		4	1	14'-5"	1	
#4AS205		4	1	13'-1"	1	
#4AS206		4	1	10'-4"	1	
#4AS207		4	1	6'-1"	1	

BAR BENDING DIAGRAM

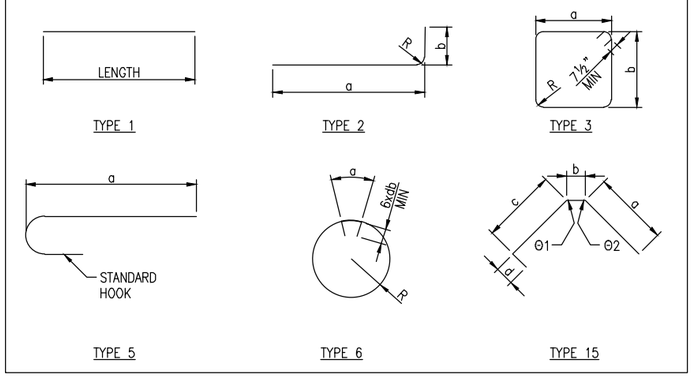

PETER J. LORIS
NEW MEXICO
19400
7/31/2018
PROFESSIONAL ENGINEER

Print Date: Jul 31, 2018
File Name: 12126 (33) Bridge Details.dwg
Horiz. Scale: Vert. Scale: As Noted
Unit Information Unit Leader Initials

Sheet Revisions

Date:	Comments	Init.

Loris
A DIVISION OF OTAK

SANTA FE COUNTY

As Constructed
No Revisions:
Revised:
Void:

ARROYO HONDO TRAIL
BRIDGE #1 REBAR SCHEDULE

Designer: DG
Detailer: DG
Sheet Subset: B–05
Structure Numbers
Subset Sheets: 6

Project No./Code
Arroyo Hondo Trail
325–12126

G:\7.2 Clients\325 – Santa Fe County–NM\12126 – Arroyo Hondo Trail\50 DWG\Segment 4\12126 (33) Bridge Details.dwg Jul 31, 2018 – 11:31am

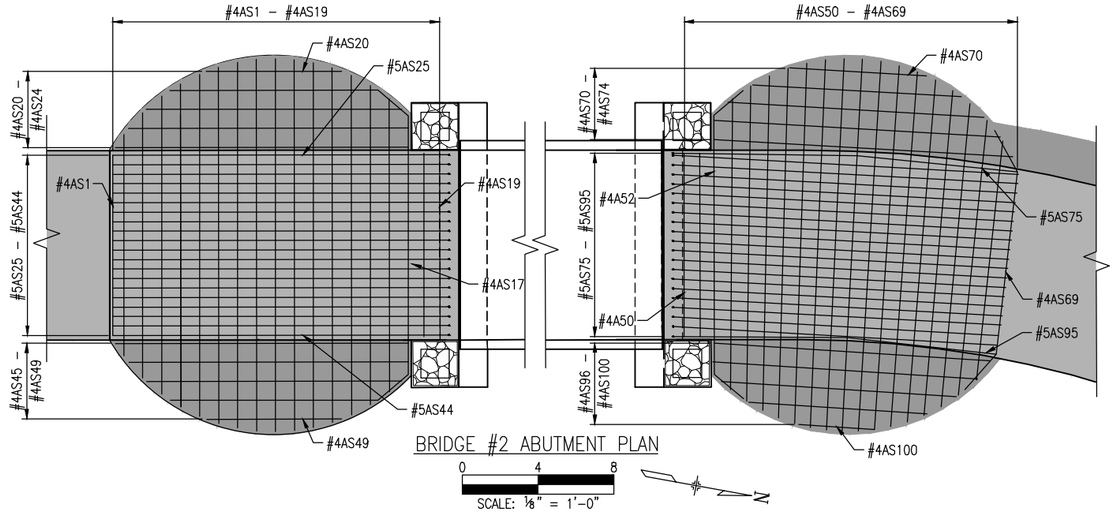

BRIDGE #2 ABUTMENT PLAN

Mark	Multiplier	Size	Type	Length	No. Req'd	Remarks
Bridge Deck						
#4D3		4	1	9'-8"	111	
#4D4		4	1	60'-0"	11	
#4D5		4	1	50'-11"	11	
Pilasters						
#4P1	4	4	3		8	a = 1'-2", b = 1'-2", R = 1"
#5P2	4	5	2		4	a = 8'-1", b = 0'-10", R = 1 7/8"
Pilaster Abutment						
#4AB1	4	4	3		4	a = 3'-8", b = 2'-1", R = 1"
#4AB2	4	4	1	2'-2"	5	
#5AB3	2	5	1	14'-8"	2	
#6AB4	2	6	1	14'-8"	6	
#5AB5	2	5	1	14'-8"	4	
#4AB6	2	4	3		12	a = 2'-2", b = 2'-1", R = 1"
#5AB7	2	5	3		11	a = 0'-8", b = 3'-4", R = 1 7/8"
Caisson						
#8C1	4	8	1	18'-0"	4	
#8C2	4	8	5		4	a = 18'-0"
#4C3	4	4	6		22	a = 0'-3", R = 0'-9"
Approach Slab						
#4AS1		4	1	9'-6"	1	
#4AS2		4	1	11'-8"	1	
#4AS3		4	1	14'-0"	1	
#4AS4		4	1	15'-8"	1	
#4AS5		4	1	17'-0"	1	
#4AS6		4	1	18'-0"	1	
#4AS7		4	1	18'-9"	1	
#4AS8		4	1	19'-3"	1	
#4AS9		4	1	19'-7"	1	
#4AS10		4	1	19'-8"	1	
#4AS11		4	1	19'-7"	1	
#4AS12		4	1	19'-3"	1	
#4AS13		4	1	18'-8"	1	
#4AS14		4	1	17'-11"	1	
#4AS15		4	1	16'-10"	1	
#4AS16		4	1	15'-6"	1	
#4AS17		4	15		1	a = 2'-0", b = 13'-7", c = 2'-0", d = 0'-0", θ_1 = 130°, θ_2 = 130°
#4AS18		4	1	9'-8"	1	
#4AS19		4	1	9'-8"	1	
#4AS20		4	1	7'-2"	1	
#4AS21		4	1	11'-0"	1	
#4AS22		4	1	13'-6"	1	
#4AS23		4	1	14'-9"	1	
#4AS24		4	1	15'-5"	1	
#5AS25 - #5AS44		5	2		1	a = 17'-9", b = 0'-10", R = 1 7/8"
#4AS45		4	1	15'-5"	1	
#4AS46		4	1	14'-9"	1	
#4AS47		4	1	13'-6"	1	
#4AS48		4	1	10'-11"	1	
#4AS49		4	1	7'-1"	1	

Mark	Multiplier	Size	Type	Length	No. Req'd	Remarks
#4AS50		4	1	9'-8"	1	
#4AS51		4	1	9'-8"	1	
#4AS52		4	15		1	a = 2'-0", b = 13'-7", c = 2'-0", d = 0'-0", θ_1 = 130°, θ_2 = 130°
#4AS53		4	1	15'-4"	1	
#4AS54		4	1	16'-7"	1	
#4AS55		4	1	17'-8"	1	
#4AS56		4	1	18'-5"	1	
#4AS57		4	1	19'-0"	1	
#4AS58		4	1	19'-5"	1	
#4AS59		4	1	19'-7"	1	
#4AS60		4	1	19'-8"	1	
#4AS61		4	1	19'-6"	1	
#4AS62		4	1	19'-3"	1	
#4AS63		4	1	18'-9"	1	
#4AS64		4	1	18'-1"	1	
#4AS65		4	1	17'-2"	1	
#4AS66		4	1	16'-0"	1	
#4AS67		4	1	14'-7"	1	
#4AS68		4	1	12'-8"	1	
#4AS69		4	15		1	a = 2'-6", b = 9'-8", c = 2'-6", d = 0'-0", θ_1 = 145°, θ_2 = 145°
#4AS70		4	1	7'-3"	1	
#4AS71		4	1	11'-0"	1	
#4AS72		4	1	13'-6"	1	
#4AS73		4	1	15'-2"	1	
#4AS74		4	1	15'-9"	1	
#5AS75		5	15		1	a = 0'-0", b = 8'-6", c = 9'-9", d = 0'-10", θ_1 = 175°, θ_2 = 0°
#5AS76		5	2		1	a = 18'-3", b = 0'-10", R = 1 7/8"
#5AS77		5	2		1	a = 18'-3", b = 0'-10", R = 1 7/8"
#5AS78		5	2		1	a = 18'-2", b = 0'-10", R = 1 7/8"
#5AS79		5	2		1	a = 18'-1", b = 0'-10", R = 1 7/8"
#5AS80		5	2		1	a = 18'-0", b = 0'-10", R = 1 7/8"
#5AS81		5	2		1	a = 18'-0", b = 0'-10", R = 1 7/8"
#5AS82		5	2		1	a = 17'-11", b = 0'-10", R = 1 7/8"
#5AS83		5	2		1	a = 17'-10", b = 0'-10", R = 1 7/8"
#5AS84		5	2		1	a = 17'-10", b = 0'-10", R = 1 7/8"
#5AS85		5	2		1	a = 17'-9", b = 0'-10", R = 1 7/8"
#5AS86		5	2		1	a = 17'-8", b = 0'-10", R = 1 7/8"
#5AS87		5	2		1	a = 17'-7", b = 0'-10", R = 1 7/8"
#5AS88		5	2		1	a = 17'-7", b = 0'-10", R = 1 7/8"
#5AS89		5	2		1	a = 17'-6", b = 0'-10", R = 1 7/8"
#5AS90		5	2		1	a = 17'-5", b = 0'-10", R = 1 7/8"
#5AS91		5	2		1	a = 17'-5", b = 0'-10", R = 1 7/8"
#5AS92		5	2		1	a = 17'-4", b = 0'-10", R = 1 7/8"
#5AS93		5	2		1	a = 17'-2", b = 0'-10", R = 1 7/8"
#5AS94		5	2		1	a = 17'-1", b = 0'-10", R = 1 7/8"
#5AS95		5	15		1	a = 0'-0", b = 7'-11", c = 9'-2", d = 0'-10", θ_1 = 175°, θ_2 = 0°
#4AS96		4	1	14'-7"	1	
#4AS97		4	1	14'-0"	1	
#4AS98		4	1	12'-5"	1	
#4AS99		4	1	9'-5"	1	
#4AS100		4	1	4'-0"	1	

BAR BENDING DIAGRAM

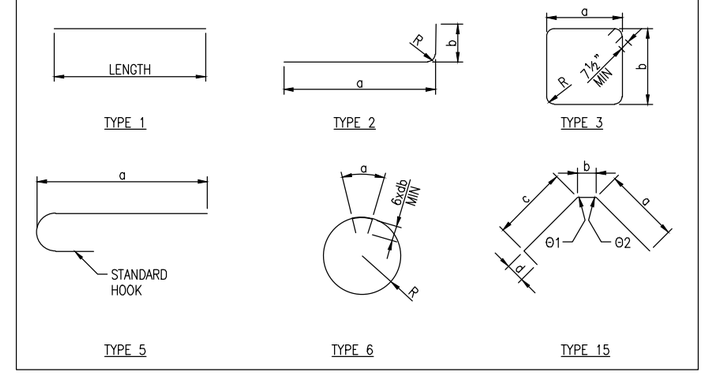

PETER J. LORIS
NEW MEXICO
19400
7/31/2018
PROFESSIONAL ENGINEER

Print Date: Jul 31, 2018	Sheet Revisions		
File Name: 12126 (33) Bridge Details.dwg	Date:	Comments	Init.
Horiz. Scale: Vert. Scale: As Noted			
Unit Information Unit Leader Initials			

Loris — A DIVISION OF OTAK

SANTA FE COUNTY

As Constructed	ARROYO HONDO TRAIL BRIDGE #2 REBAR SCHEDULE			Project No./Code
No Revisions:				Arroyo Hondo Trail
Revised:	Designer: DG	Structure Numbers		325–12126
Void:	Detailer: DG			
	Sheet Subset: B–06	Subset Sheets: 6		36

G:\72 Clients\325 – Santa Fe County–NM\12126 – Arroyo Hondo Trail\50 DWG\Segment 4\12126 (33) Bridge Details.dwg Jul 31, 2018 – 11:31am

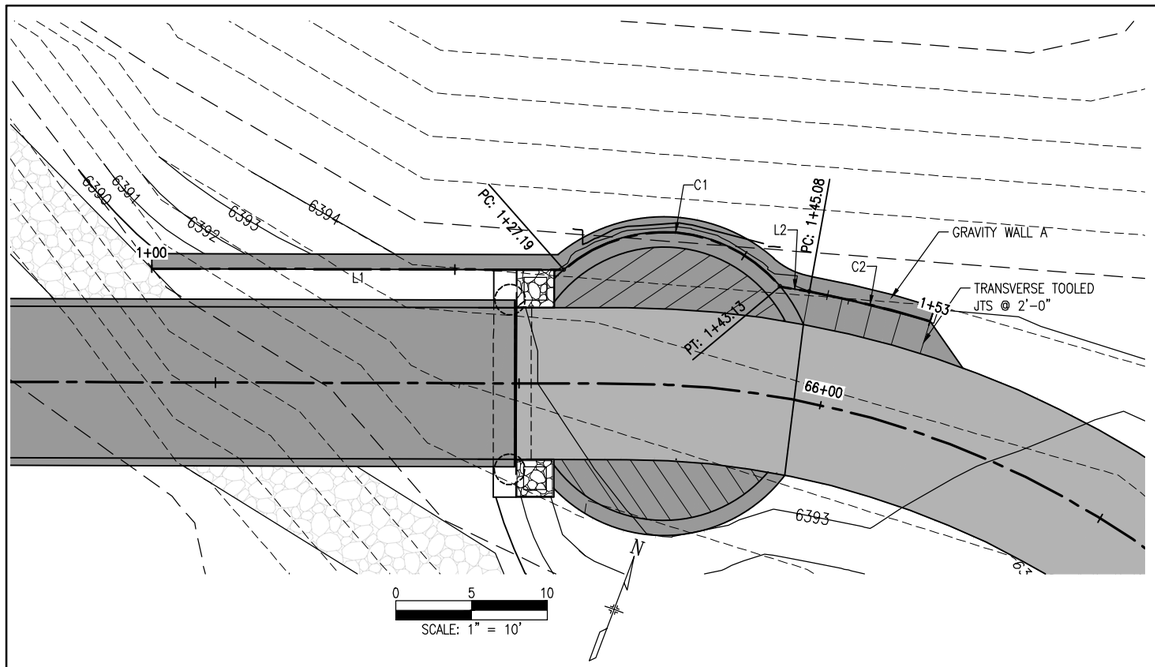

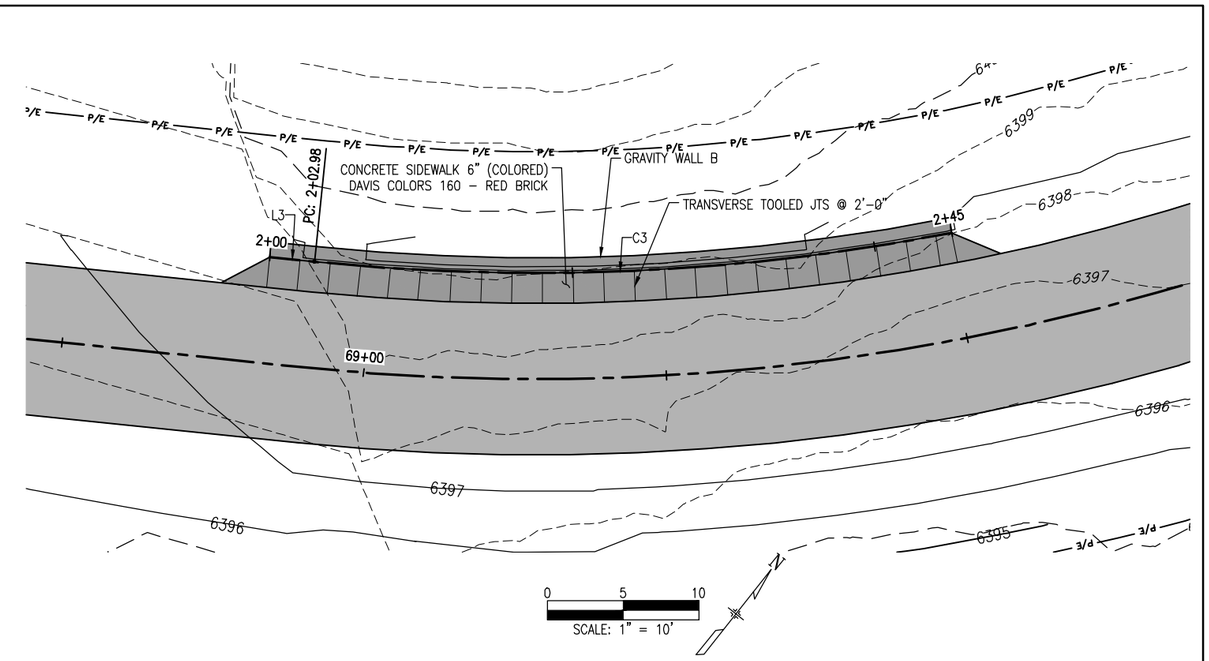

GRAVITY WALL A						
SEGMENT NUMBER	START STATION	START NORTHING	START EASTING	LENGTH	RADIUS	LINE/CHORD DIRECTION
L1	1+00.00	1674142.56	1705477.00	27.19		N10° 49' 51.06"W
C1	1+27.19	1674169.27	1705471.89	15.939	10.00	N06° 34' 42.27"W
L2	1+43.13	1674183.48	1705470.26	1.95		N01° 22' 15.50"W
C2	1+45.08	1674185.43	1705470.21	8.214	67.20	N02° 57' 49.67"E

PETER J. LORIS
NEW MEXICO
19400
7/31/2018
PROFESSIONAL ENGINEER

GRAVITY WALL B						
SEGMENT NUMBER	START STATION	START NORTHING	START EASTING	LENGTH	RADIUS	LINE/CHORD DIRECTION
L3	2+00.00	1674401.77	1705671.42	2.98		N57° 20' 36.90"E
C3	2+02.98	1674403.38	1705673.93	42.200	143.23	N48° 53' 49.52"E

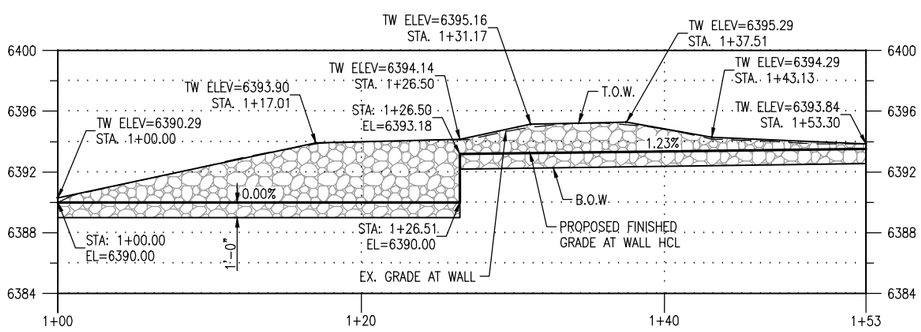

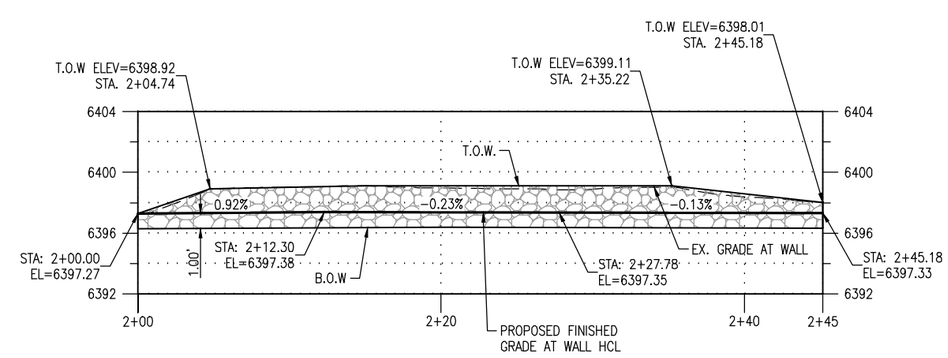

Print Date: Jul 31, 2018	Sheet Revisions			
File Name: 12126 (34-35) Wall.dwg	Date:	Comments	Init.	
Horiz. Scale: Vert. Scale: As Noted				
Unit Information Unit Leader Initials				

Loris
A DIVISION OF OTAK

SANTA FE COUNTY

As Constructed	ARROYO HONDO TRAIL GRAVITY WALL PLAN & PROFILE (WALL A & B)			Project No./Code
No Revisions:				Arroyo Hondo Trail
Revised:	Designer: SJB	Structure Numbers		325-12126
Void:	Detailer: LX			
	Sheet Subset: W-01	Subset Sheets: 2		37

G:\7.2 Clients\325 - Santa Fe County-NM\12126 - Arroyo Hondo Trail\50 DWG\Segment 4\12126 (34-35) Wall.dwg Jul 31, 2018 - 11:34am

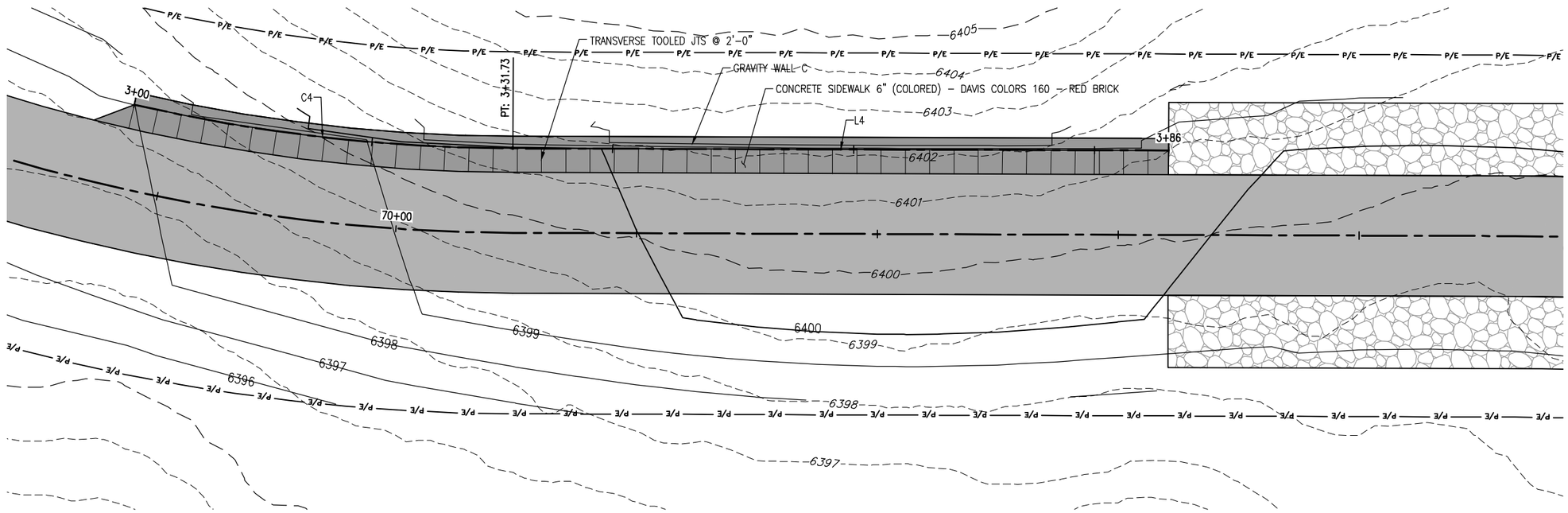

0 5 10
SCALE: 1" = 10'

GRAVITY WALL C						
SEGMENT NUMBER	START STATION	START NORTHING	START EASTING	LENGTH	RADIUS	LINE/CHORD DIRECTION
C4	3+00.00	1674459.66	1705724.57	31.731	141.93	N20° 18' 46.65"E
L4	3+31.73	1674489.36	1705735.57	54.44		N13° 55' 28.27"E

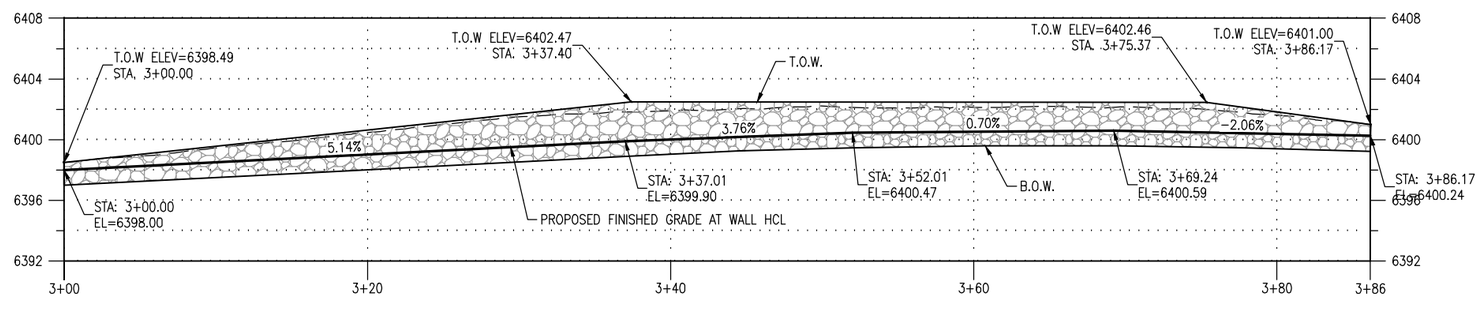

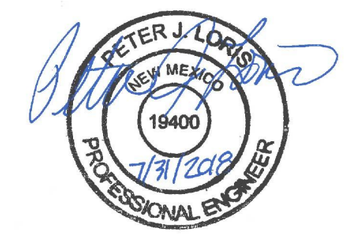

Print Date: Jul 31, 2018	Sheet Revisions			
File Name: 12126 (34-35) Wall.dwg	Date:	Comments	Init.	
Horiz. Scale: Vert. Scale: As Noted				
Unit Information Unit Leader Initials				

Loris — A DIVISION OF OTAK

SANTA FE COUNTY

As Constructed
No Revisions:
Revised:
Void:

ARROYO HONDO TRAIL
GRAVITY WALL PLAN & PROFILE
(WALL C)

Designer:	SJB	Structure Numbers	
Detailer:	LX		
Sheet Subset:	W-02	Subset Sheets:	2

Project No./Code
Arroyo Hondo Trail
325-12126

G:\7.2 Clients\325 - Santa Fe County-NM\12126 - Arroyo Hondo Trail\50 DWG\Segment 4\12126 (34-35) Wall.dwg Jul 31, 2018 - 11:35am

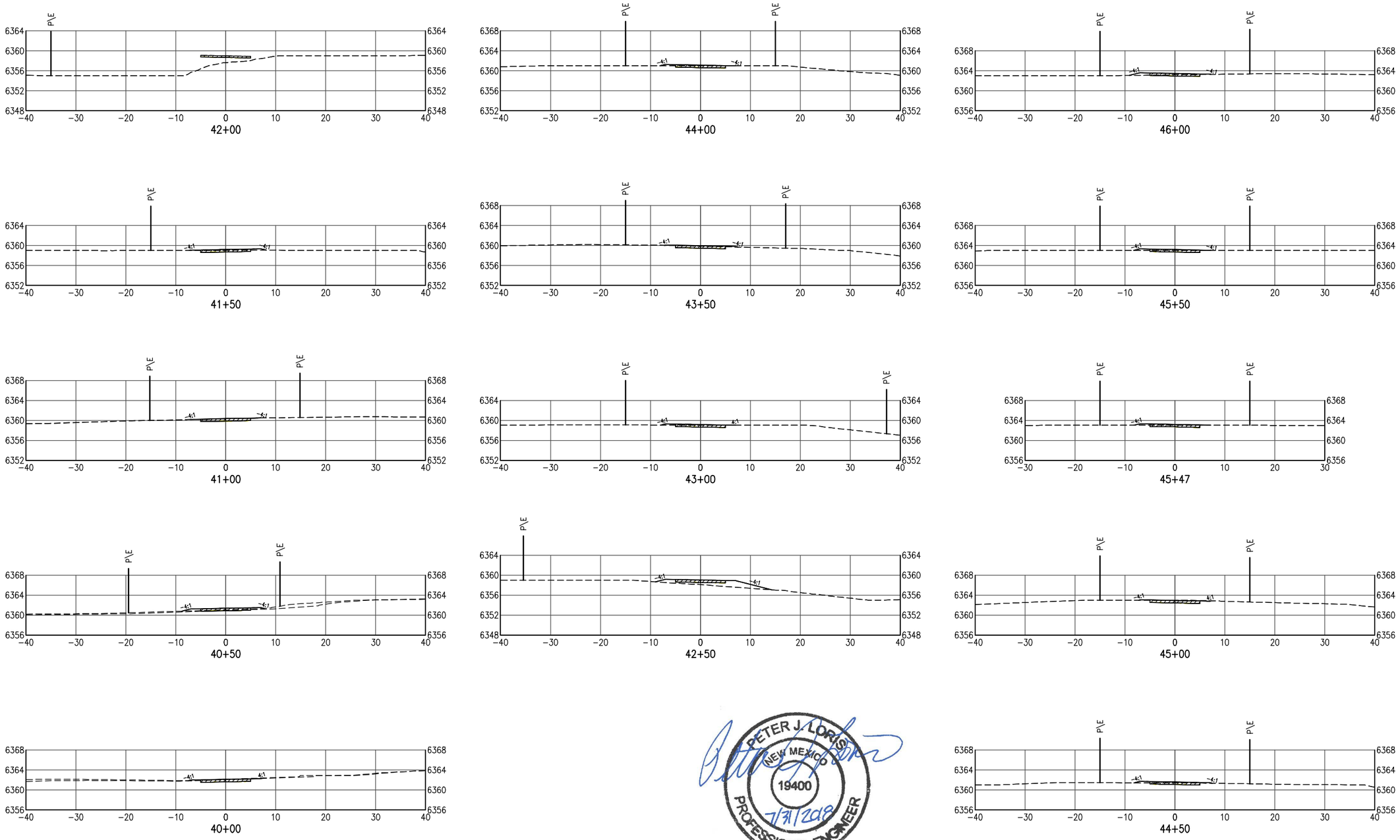

PETER J. LORIS
NEW MEXICO
19400
7/31/2018
PROFESSIONAL ENGINEER

Print Date: Jul 31, 2018	Sheet Revisions			As Constructed	ARROYO HONDO TRAIL CROSS SECTIONS	Project No./Code
File Name: 12126 (36–45) Cross Sections (Seg4).dwg	Date:	Comments	Init.	No Revisions:		Arroyo Hondo Trail
Horiz. Scale: Vert. Scale: As Noted				Revised:	Designer: SJB / Structure Numbers	325–12126
Unit Information Unit Leader Initials				Void:	Detailer: LX / Sheet Subset: X–1 / Subset Sheets: 13	39

Loris A DIVISION OF OTAK

SANTA FE COUNTY

G:\7.2 Clients\325 – Santa Fe County–NM\12126 – Arroyo Hondo Trail\50 DWG\Segment 4\12126 (36–45) Cross Sections (Seg4).dwg Jul 31, 2018 – 11:35am

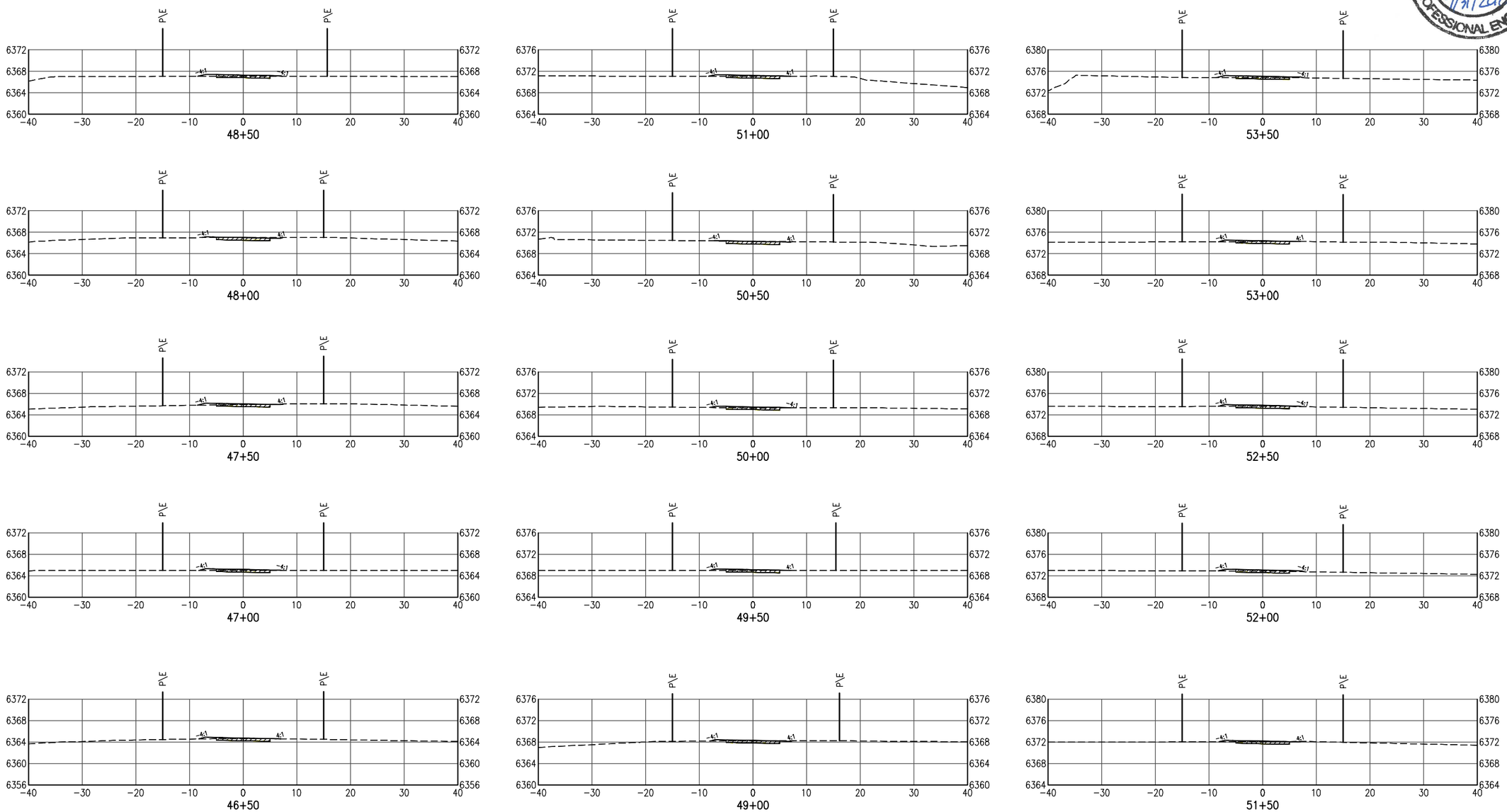

PETER J. LORIS
NEW MEXICO
19400
7/31/2018
PROFESSIONAL ENGINEER

Print Date: Jul 31, 2018	Sheet Revisions			As Constructed	ARROYO HONDO TRAIL CROSS SECTIONS		Project No./Code
File Name: 12126 (36-45) Cross Sections (Seg4).dwg	Date:	Comments	Init.	No Revisions:			Arroyo Hondo Trail
Horiz. Scale: Vert. Scale: As Noted				Revised:	Designer: SJB	Structure Numbers	325-12126
Unit Information Unit Leader Initials				Void:	Detailer: LX		
					Sheet Subset: X-2	Subset Sheets: 13	40

Loris A DIVISION OF OTAK

SANTA FE COUNTY

G:\7.2 Clients\325 - Santa Fe County-NM\12126 - Arroyo Hondo Trail\50 DWG\Segment 4\12126 (36-45) Cross Sections (Seg4).dwg Jul 31, 2018 - 11:35am

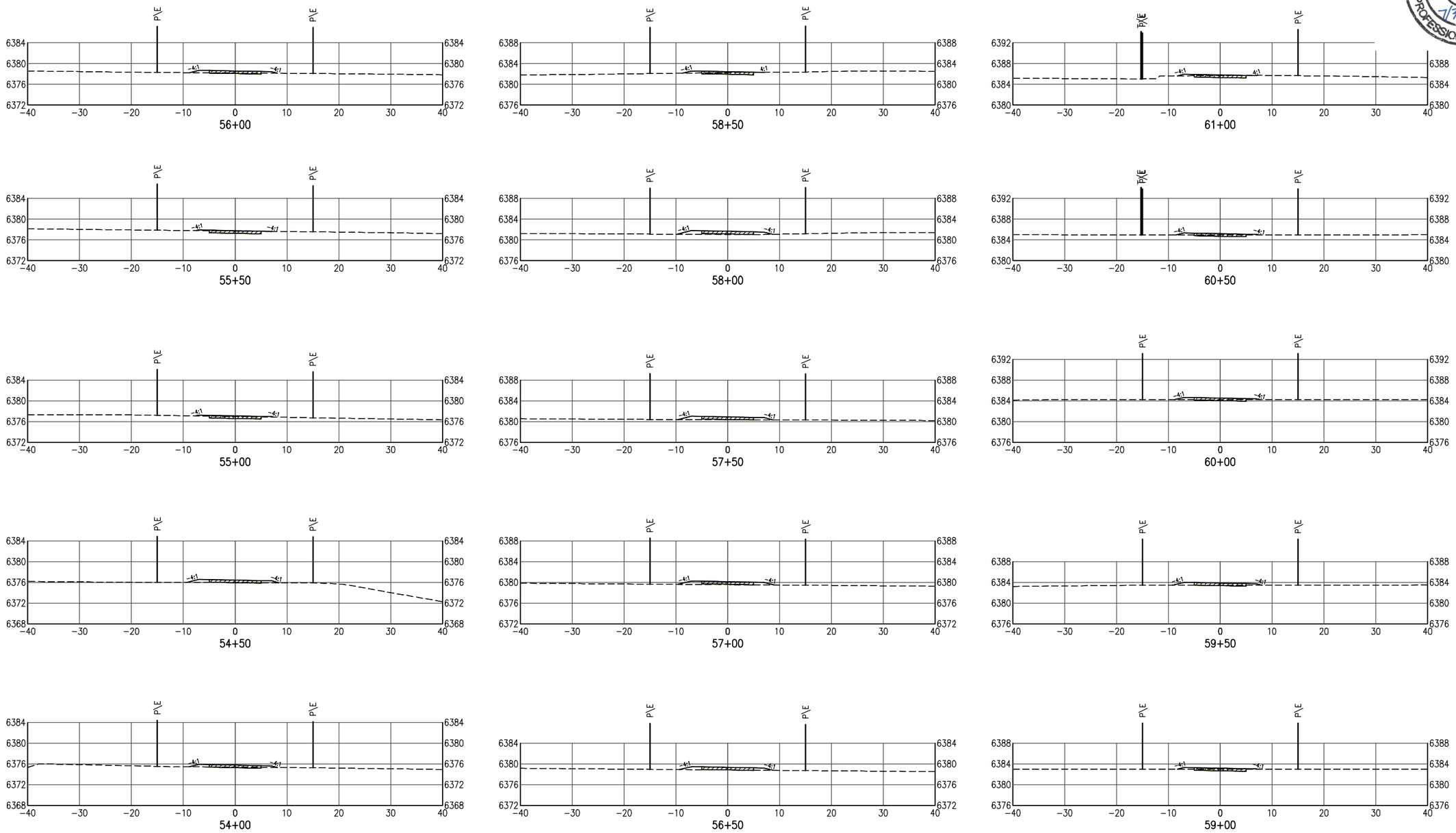

PETER J. LORIS
NEW MEXICO
19400
7/31/2018
PROFESSIONAL ENGINEER

Print Date: Jul 31, 2018	Sheet Revisions			As Constructed	ARROYO HONDO TRAIL CROSS SECTIONS	Project No./Code
File Name: 12126 (36–45) Cross Sections (Seg4).dwg	Date:	Comments	Init.	No Revisions:		Arroyo Hondo Trail
Horiz. Scale: Vert. Scale: As Noted				Revised:	Designer: SJB / Structure Numbers	325–12126
Unit Information Unit Leader Initials				Void:	Detailer: LX / Sheet Subset: X–3 / Subset Sheets: 13	41

Loris A DIVISION OF OTAK

SANTA FE COUNTY

G:\7.2 Clients\325 – Santa Fe County–NM\12126 – Arroyo Hondo Trail\50 DWG\Segment 4\12126 (36–45) Cross Sections (Seg4).dwg Jul 31, 2018 – 11:35am

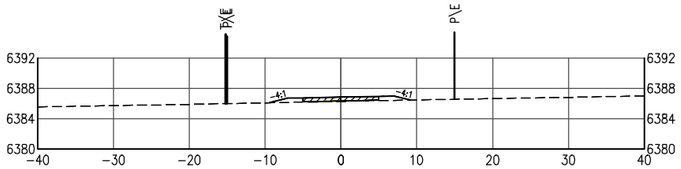

63+00

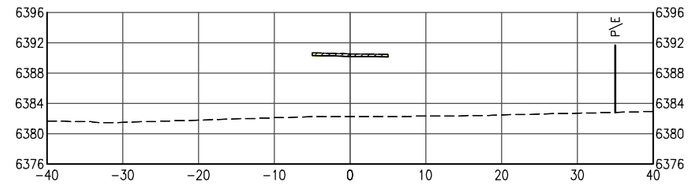

65+00

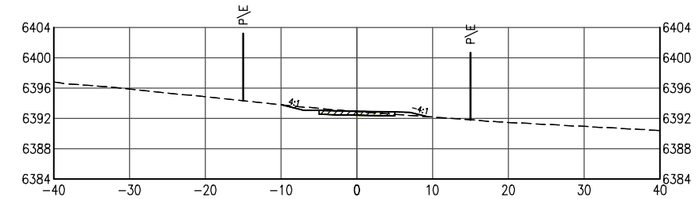

67+00

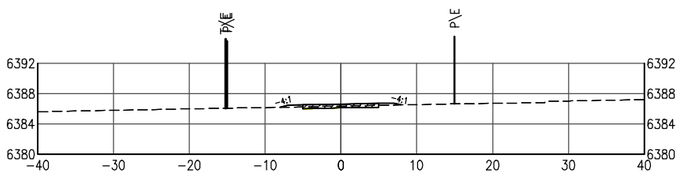

62+50

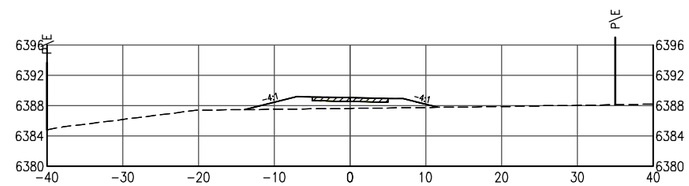

64+50

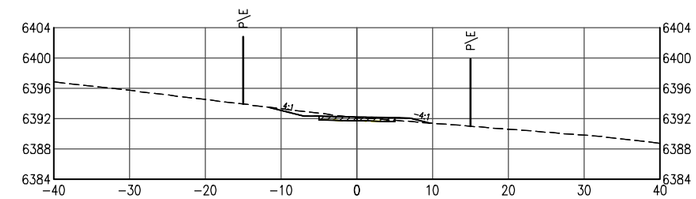

66+50

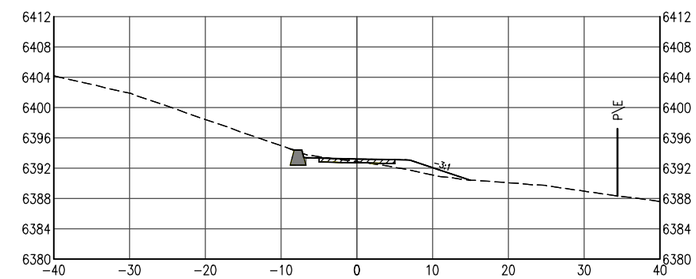

66+00

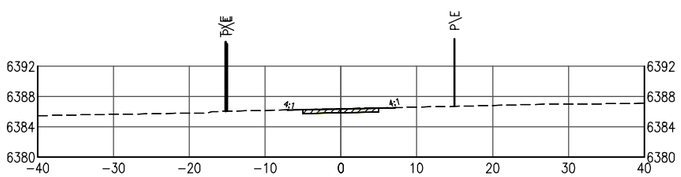

62+00

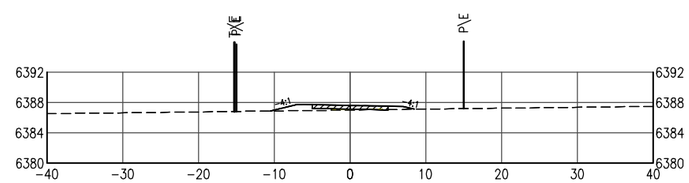

64+00

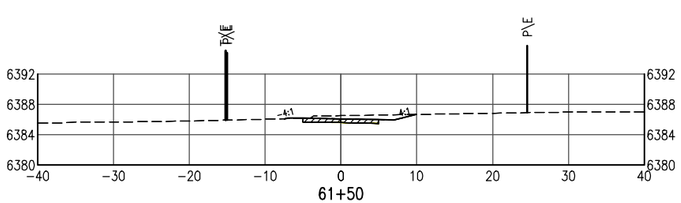

61+50

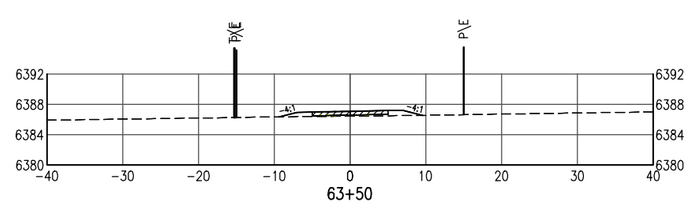

63+50

Print Date: Jul 31, 2018		Sheet Revisions			As Constructed	ARROYO HONDO TRAIL CROSS SECTIONS		Project No./Code
File Name: 12126 (36-45) Cross Sections (Seg4).dwg		Date:	Comments	Init.	No Revisions:			Arroyo Hondo Trail
Horiz. Scale: Vert. Scale: As Noted					Revised:	Designer: SJB	Structure Numbers	325-12126
Unit Information Unit Leader Initials					Void:	Detailer: LX		
						Sheet Subset: X-4	Subset Sheets: 13	42

Loris A DIVISION OF OTAK

SANTA FE COUNTY

G:\7.2 Clients\325 - Santa Fe County-NM\12126 - Arroyo Hondo Trail\50 DWG\Segment 4\12126 (36-45) Cross Sections (Seg4).dwg Jul 31, 2018 - 11:35am

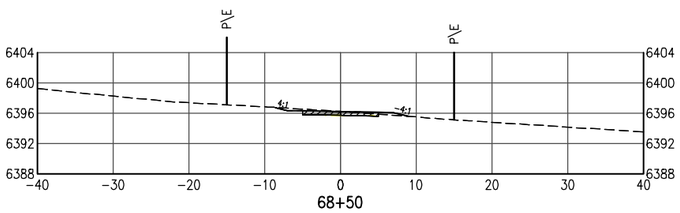

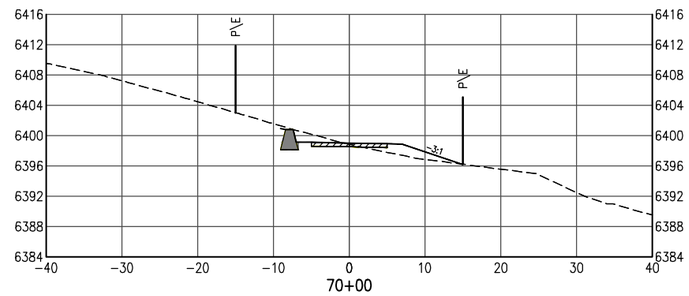

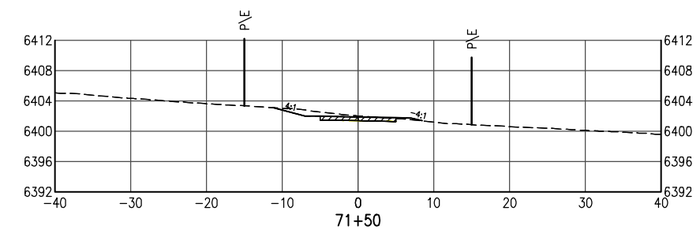

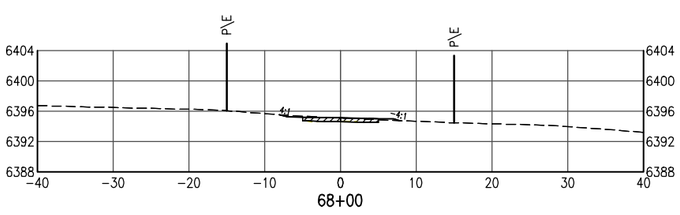

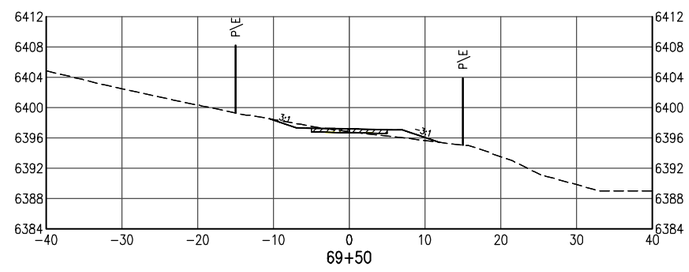

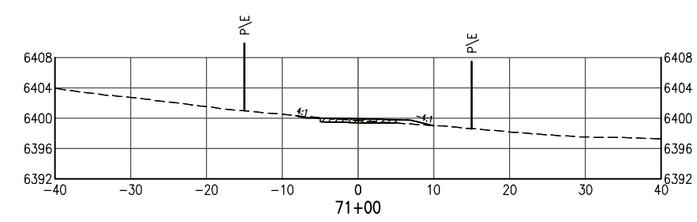

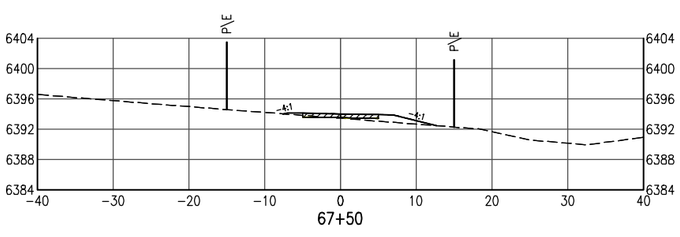

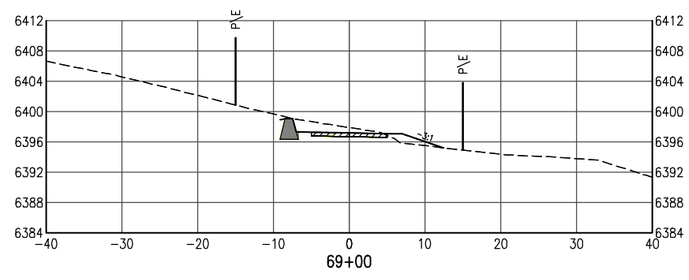

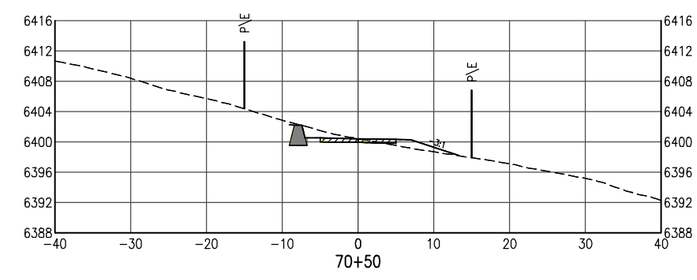

PETER J. LORIS
NEW MEXICO
19400
7/31/2018
PROFESSIONAL ENGINEER

Print Date: Jul 31, 2018	Sheet Revisions		As Constructed	ARROYO HONDO TRAIL CROSS SECTIONS	Project No./Code
File Name: 12126 (36–45) Cross Sections (Seg4).dwg	Date: / Comments / Init.	Loris A DIVISION OF OTAK	No Revisions:		Arroyo Hondo Trail
Horiz. Scale: Vert. Scale: As Noted		SANTA FE COUNTY	Revised:	Designer: SJB / Structure Numbers	325–12126
Unit Information Unit Leader Initials			Void:	Detailer: LX / Sheet Subset: X–5 / Subset Sheets: 13	43

G:\7.2 Clients\325 – Santa Fe County–NM\12126 – Arroyo Hondo Trail\50 DWG\Segment 4\12126 (36–45) Cross Sections (Seg4).dwg Jul 31, 2018 – 11:35am

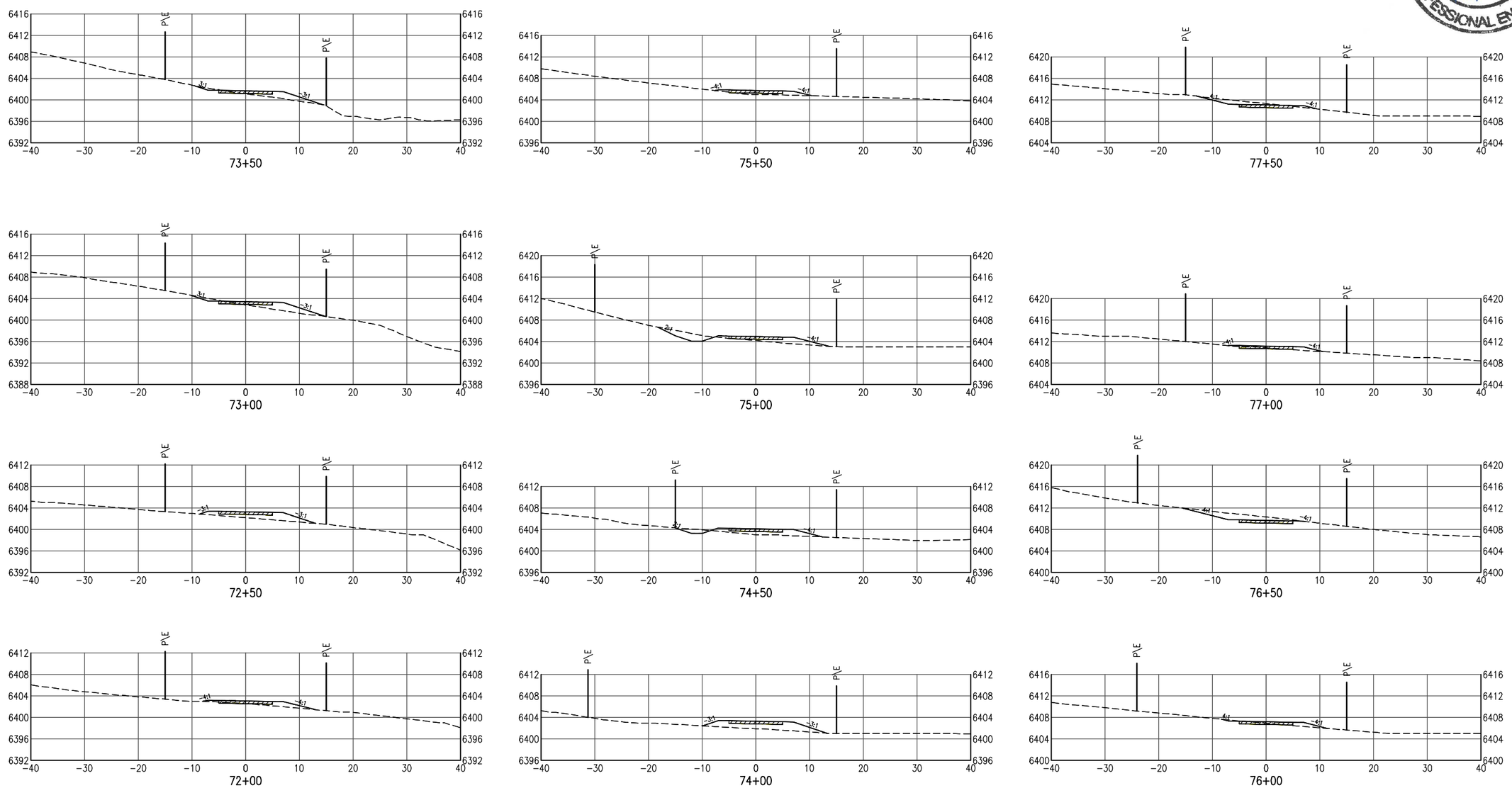

PETER J. LORIS
NEW MEXICO
19400
7/31/2018
PROFESSIONAL ENGINEER

Print Date: Jul 31, 2018	Sheet Revisions			As Constructed	ARROYO HONDO TRAIL CROSS SECTIONS	Project No./Code
File Name: 12126 (36-45) Cross Sections (Seg4).dwg	Date:	Comments	Init.	No Revisions:		Arroyo Hondo Trail
Horiz. Scale: Vert. Scale: As Noted				Revised:	Designer: SJB / Structure Numbers	325-12126
Unit Information Unit Leader Initials				Void:	Detailer: LX / Sheet Subset: X-6 / Subset Sheets: 13	44

Loris A DIVISION OF OTAK

SANTA FE COUNTY

G:\7.2 Clients\325 - Santa Fe County-NM\12126 - Arroyo Hondo Trail\50 DWG\Segment 4\12126 (36-45) Cross Sections (Seg4).dwg Jul 31, 2018 - 11:35am

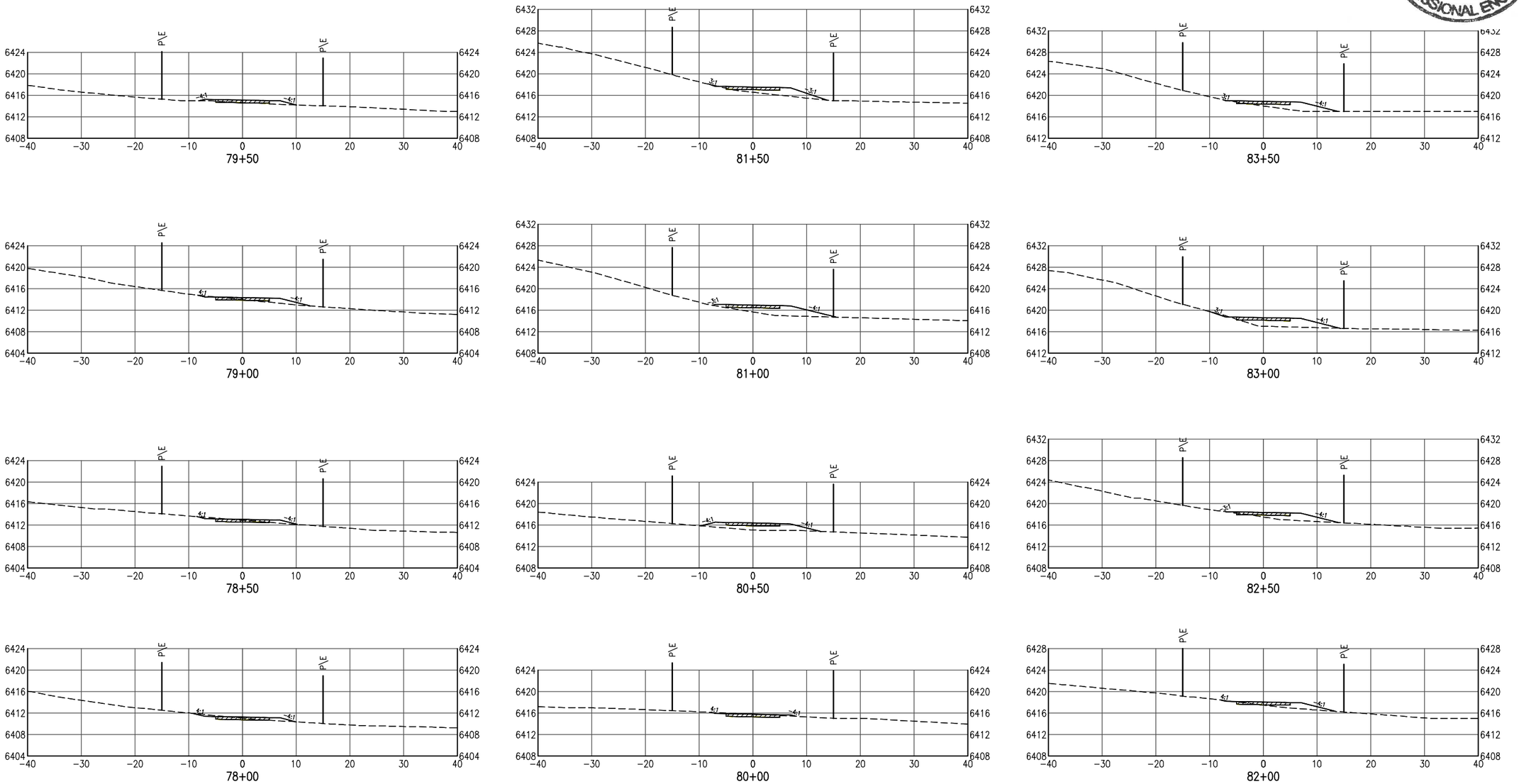

PETER J. LORIS
NEW MEXICO
19400
7/31/2018
PROFESSIONAL ENGINEER

Print Date: Jul 31, 2018	Sheet Revisions			As Constructed	ARROYO HONDO TRAIL CROSS SECTIONS	Project No./Code
File Name: 12126 (36–45) Cross Sections (Seg4).dwg	Date:	Comments	Init.	No Revisions:		Arroyo Hondo Trail
Horiz. Scale: Vert. Scale: As Noted				Revised:	Designer: SJB / Structure Numbers	325–12126
Unit Information Unit Leader Initials				Void:	Detailer: LX / Sheet Subset: X–7 / Subset Sheets: 13	45

Loris A DIVISION OF OTAK

SANTA FE COUNTY

G:\7.2 Clients\325 – Santa Fe County–NM\12126 – Arroyo Hondo Trail\50 DWG\Segment 4\12126 (36–45) Cross Sections (Seg4).dwg Jul 31, 2018 – 11:35am

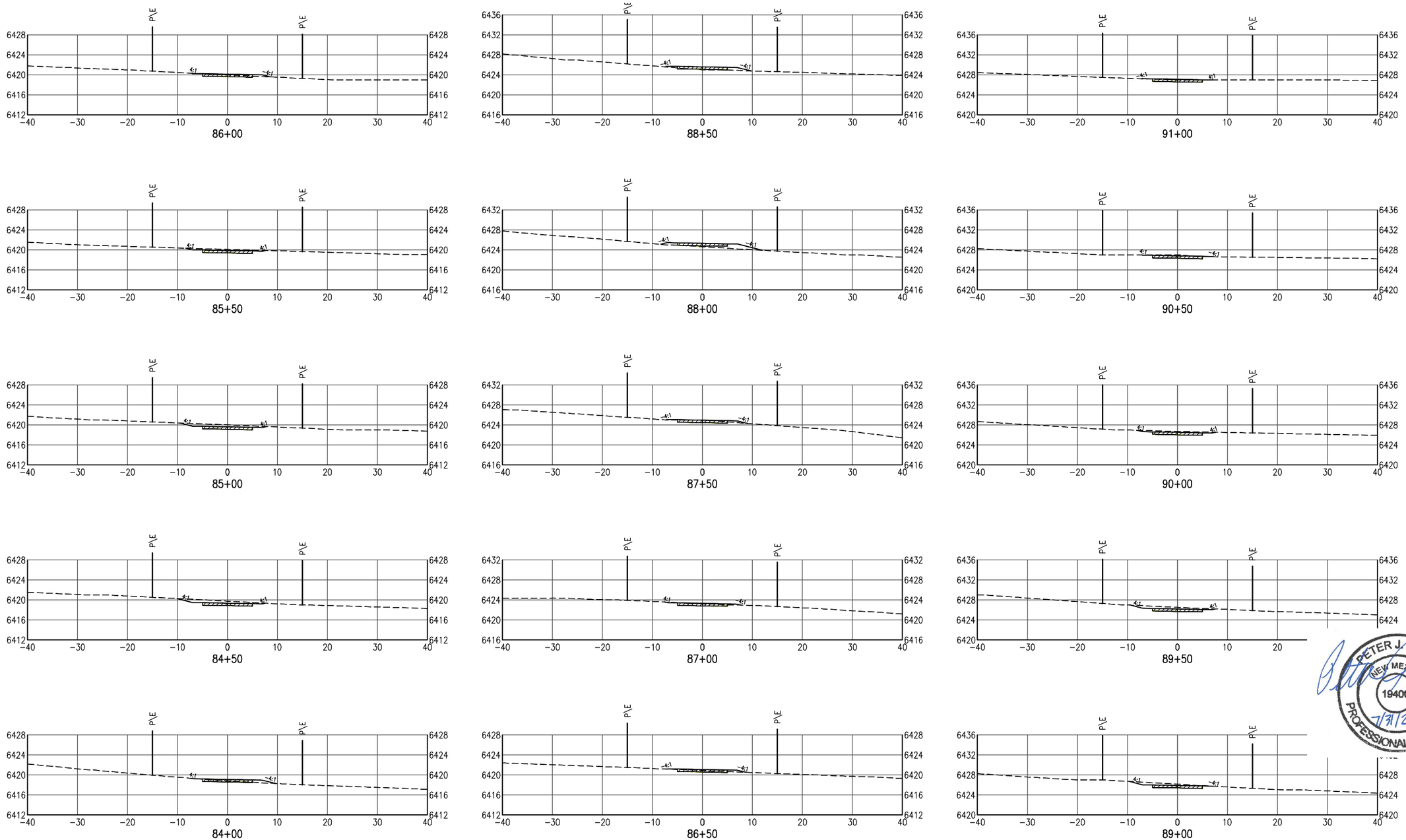

PETER J. LORIS
NEW MEXICO
19400
7/31/2018
PROFESSIONAL ENGINEER

Print Date: Jul 31, 2018	Sheet Revisions			As Constructed	ARROYO HONDO TRAIL CROSS SECTIONS	Project No./Code
File Name: 12126 (36-45) Cross Sections (Seg4).dwg	Date:	Comments	Init.	No Revisions:		Arroyo Hondo Trail
Horiz. Scale: Vert. Scale: As Noted				Revised:	Designer: SJB / Structure Numbers	325-12126
Unit Information Unit Leader Initials				Void:	Detailer: LX / Sheet Subset: X-8 / Subset Sheets: 13	46

Loris A DIVISION OF OTAK

SANTA FE COUNTY

G:\7.2 Clients\325 - Santa Fe County-NM\12126 - Arroyo Hondo Trail\50 DWG\Segment 4\12126 (36-45) Cross Sections (Seg4).dwg Jul 31, 2018 - 11:36am

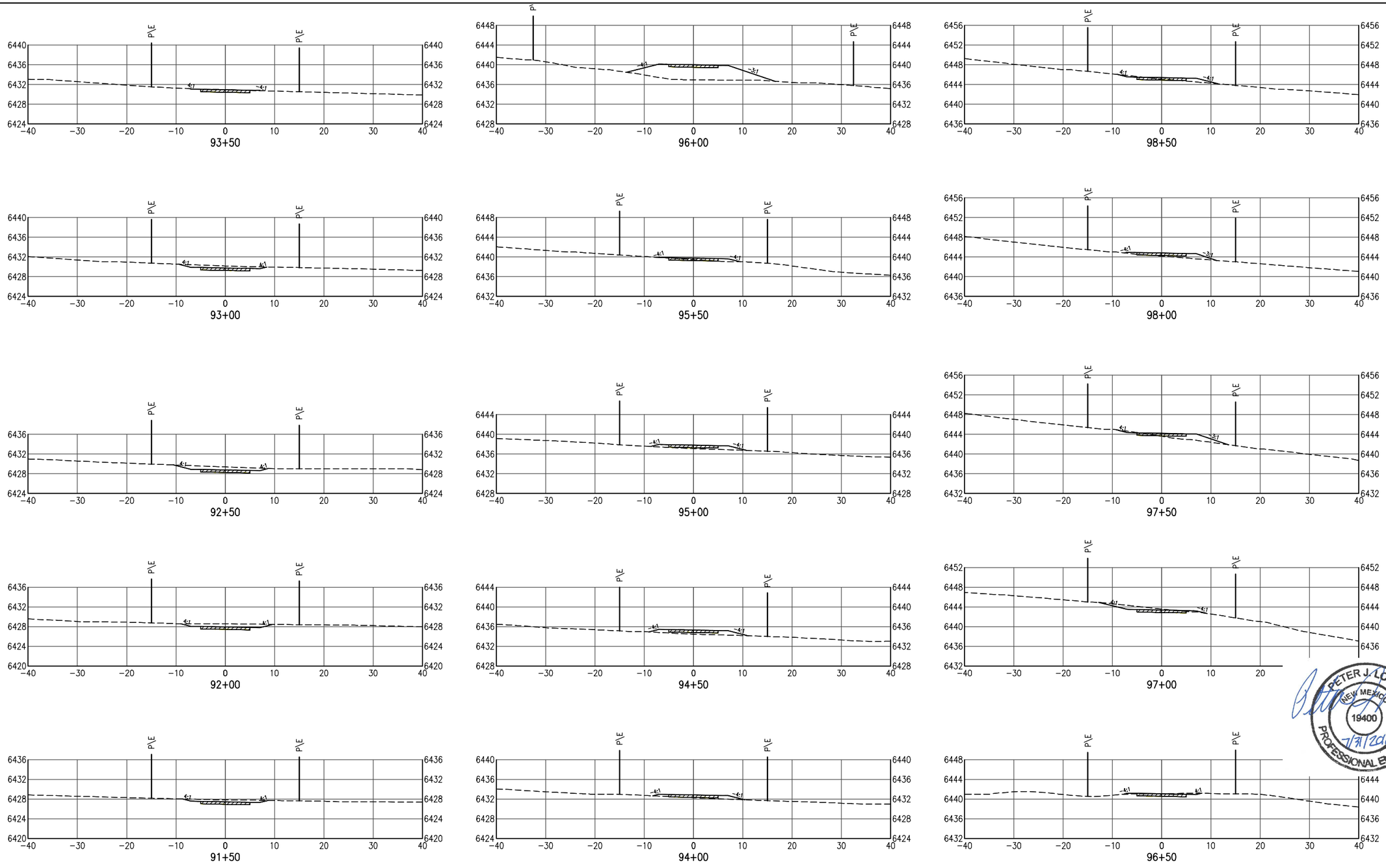

PETER J. LORIS
NEW MEXICO
19400
7/31/2018
PROFESSIONAL ENGINEER

Print Date: Jul 31, 2018	Sheet Revisions			As Constructed	ARROYO HONDO TRAIL CROSS SECTIONS	Project No./Code
File Name: 12126 (36–45) Cross Sections (Seg4).dwg	Date:	Comments	Init.	No Revisions:		Arroyo Hondo Trail
Horiz. Scale: Vert. Scale: As Noted				Revised:	Designer: SJB / Structure Numbers	325–12126
Unit Information Unit Leader Initials				Void:	Detailer: LX	
					Sheet Subset: X–9 / Subset Sheets: 13	47

Loris A DIVISION OF OTAK

SANTA FE COUNTY

G:\7.2 Clients\325 – Santa Fe County–NM\12126 – Arroyo Hondo Trail\50 DWG\Segment 4\12126 (36–45) Cross Sections (Seg4).dwg Jul 31, 2018 – 11:36am

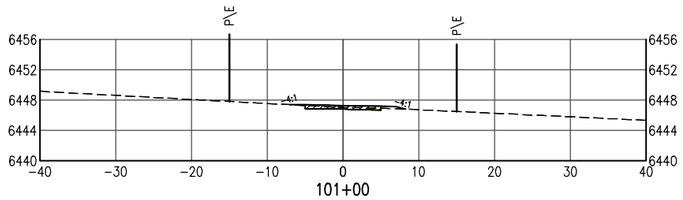

101+00

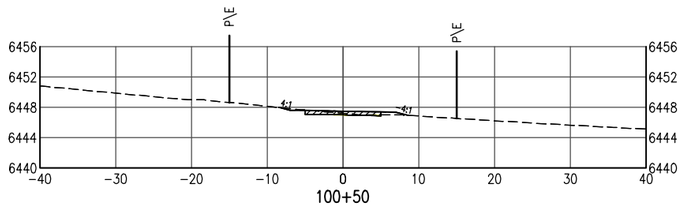

100+50

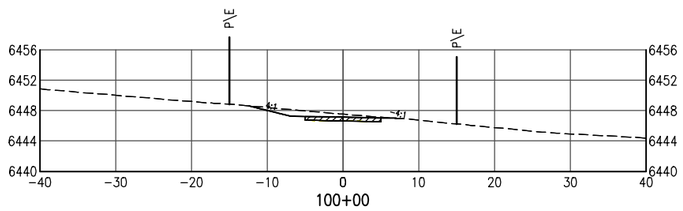

100+00

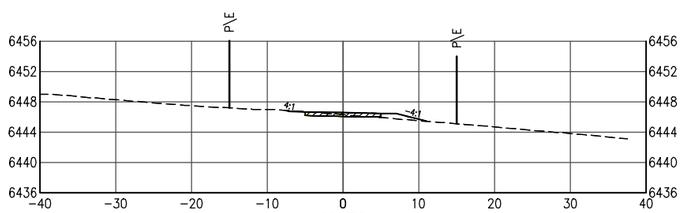

99+50

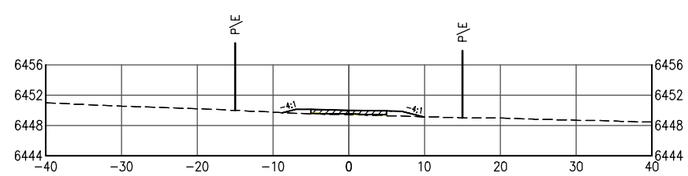

102+00

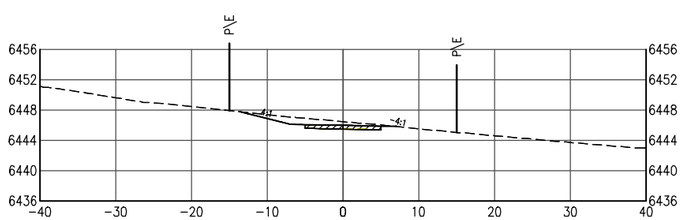

99+00

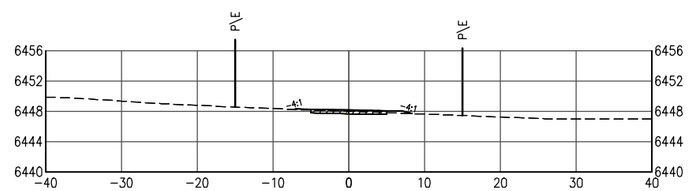

101+50

PETER J. LORIS
NEW MEXICO
19400
7/31/2018
PROFESSIONAL ENGINEER

Print Date: Jul 31, 2018	Sheet Revisions			As Constructed	ARROYO HONDO TRAIL CROSS SECTIONS		Project No./Code
File Name: 12126 (36-45) Cross Sections (Seg4).dwg	Date:	Comments	Init.	No Revisions:			Arroyo Hondo Trail
Horiz. Scale: Vert. Scale: As Noted				Revised:	Designer: SJB	Structure Numbers	325-12126
Unit Information Unit Leader Initials					Detailer: LX		
				Void:	Sheet Subset: X-10	Subset Sheets: 13	48

Loris A DIVISION OF OTAK

SANTA FE COUNTY

G:\7.2 Clients\325 - Santa Fe County-NM\12126 - Arroyo Hondo Trail\50 DWG\Segment 4\12126 (36-45) Cross Sections (Seg4).dwg Jul 31, 2018 - 11:35am

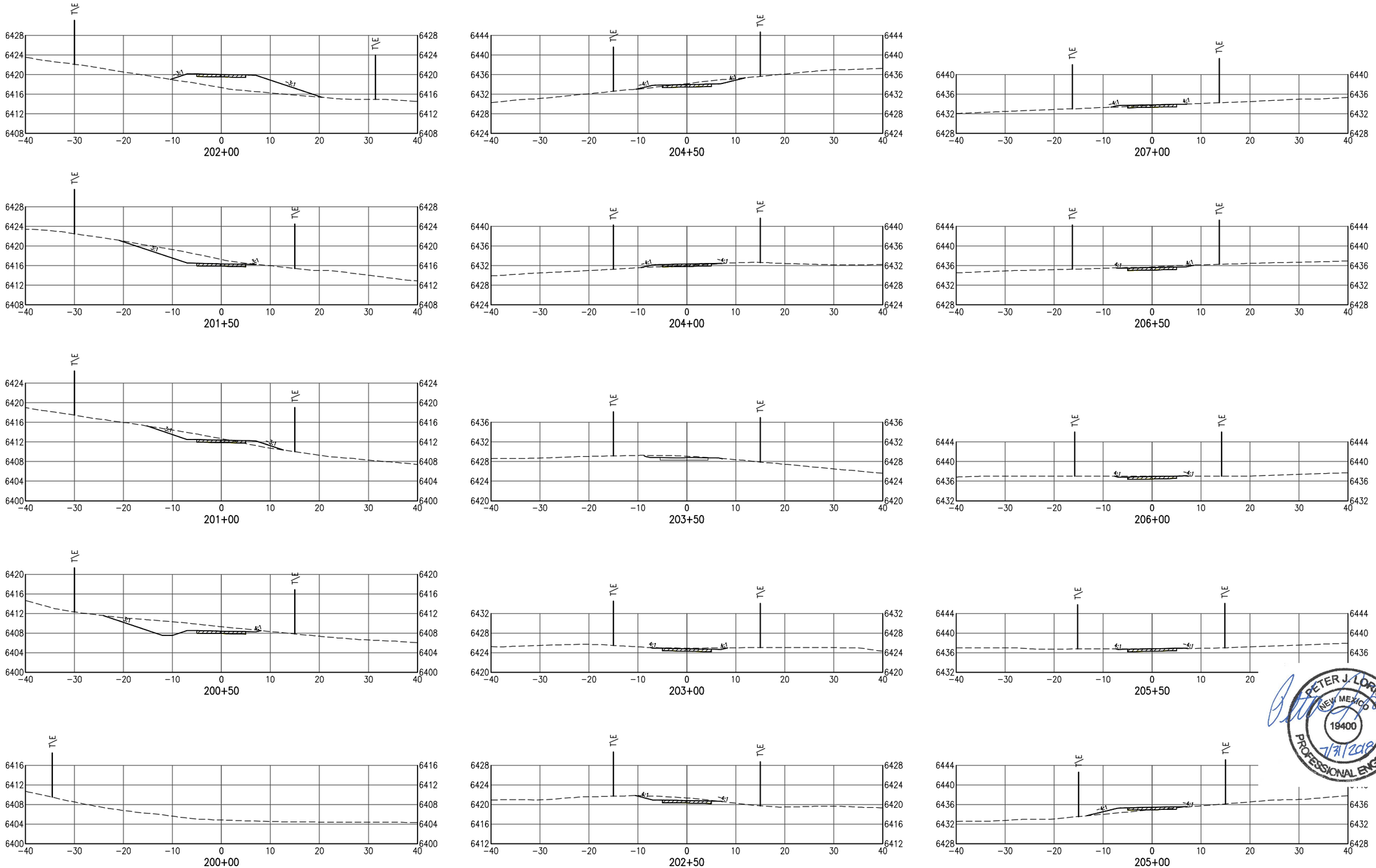

PETER J. LORIS
NEW MEXICO
19400
7/31/2018
PROFESSIONAL ENGINEER

Print Date: Jul 31, 2018	Sheet Revisions			As Constructed	ARROYO HONDO TRAIL CROSS SECTIONS	Project No./Code
File Name: 12126 (46-48) Cross Sections (Seg4B).dwg	Date:	Comments	Init.	No Revisions:		Arroyo Hondo Trail
Horiz. Scale: Vert. Scale: As Noted				Revised:	Designer: SJB / Structure Numbers	325-12126
Unit Information Unit Leader Initials				Void:	Detailer: LX / Sheet Subset: X-11 / Subset Sheets: 13	49

Loris A DIVISION OF OTAK

SANTA FE COUNTY

G:\7.2 Clients\325 - Santa Fe County-NM\12126 - Arroyo Hondo Trail\50 DWG\Segment 4\12126 (46-48) Cross Sections (Seg4B).dwg Jul 31, 2018 - 11:36am

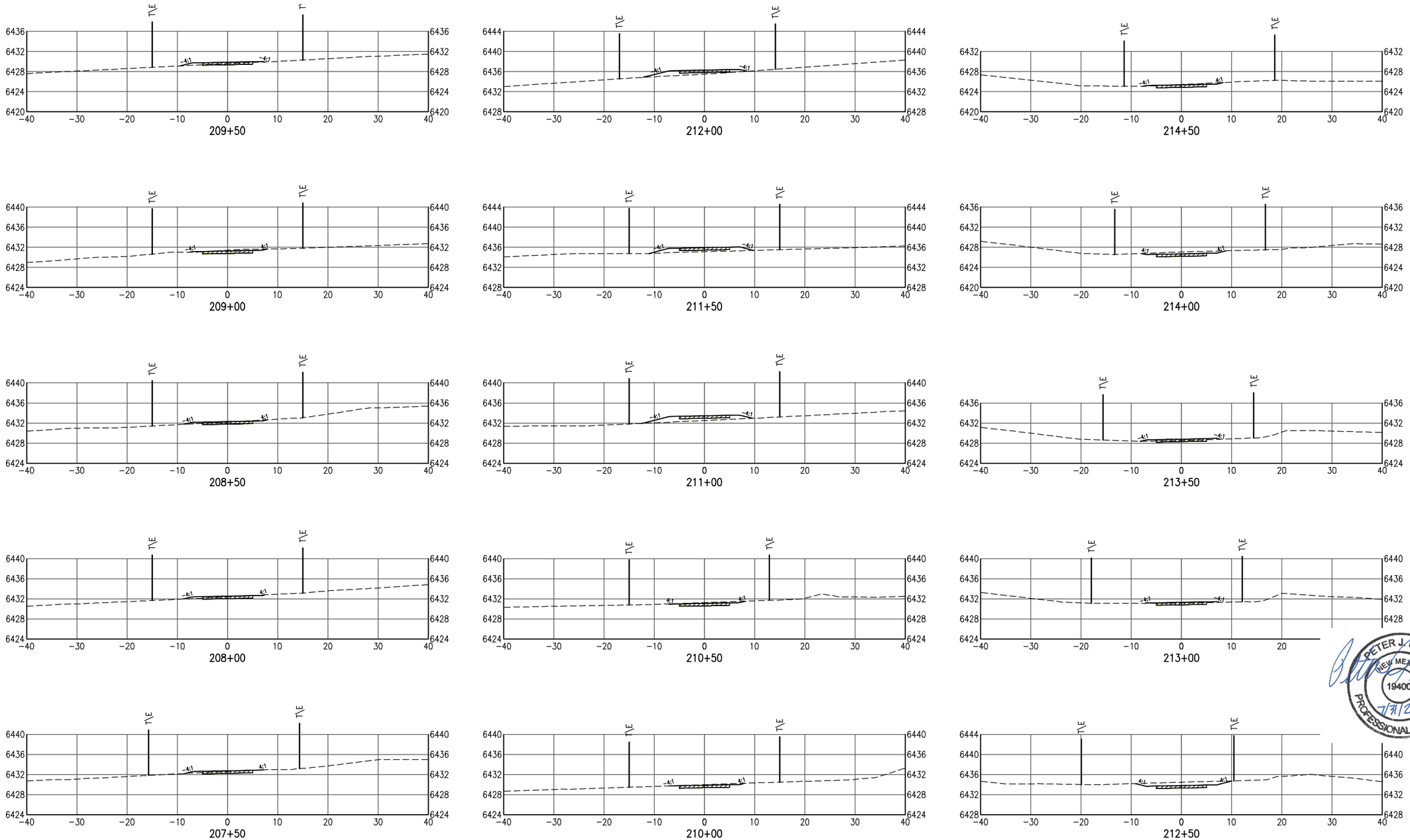

PETER J. LORIS
NEW MEXICO
19400
7/31/2018
PROFESSIONAL ENGINEER

Print Date: Jul 31, 2018	Sheet Revisions	As Constructed	ARROYO HONDO TRAIL CROSS SECTIONS	Project No./Code
File Name: 12126 (46-48) Cross Sections (Seg4B).dwg	Date: / Comments / Init.	No Revisions:		Arroyo Hondo Trail
Horiz. Scale: / Vert. Scale: As Noted		Revised:	Designer: SJB / Structure Numbers	325-12126
Unit Information / Unit Leader Initials		Void:	Detailer: LX / Sheet Subset: X-12 / Subset Sheets: 13	50

Loris — A DIVISION OF OTAK

SANTA FE COUNTY

G:\7.2 Clients\325 - Santa Fe County-NM\12126 - Arroyo Hondo Trail\50 DWG\Segment 4\12126 (46-48) Cross Sections (Seg4B).dwg Jul 31, 2018 - 11:36am

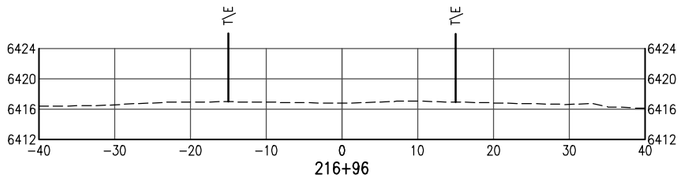

216+96

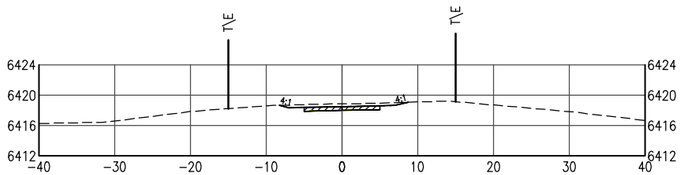

216+50

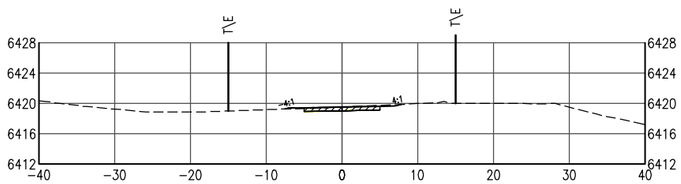

216+00

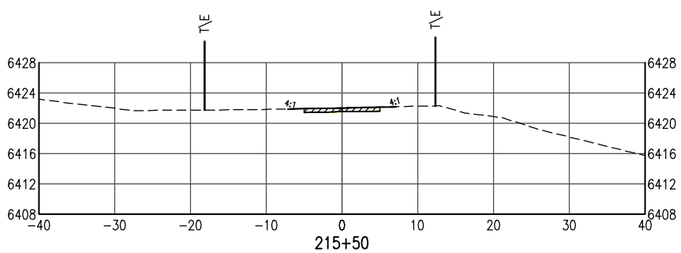

215+50

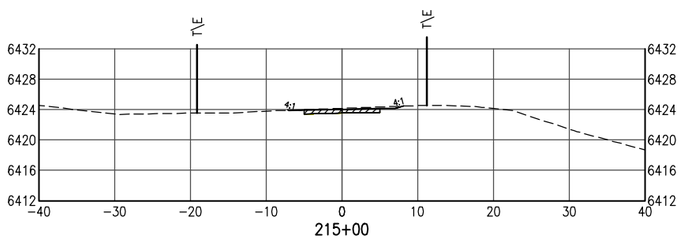

215+00

G:\7.2 Clients\325 - Santa Fe County-NM\12126 - Arroyo Hondo Trail\50 DWG\Segment 4\12126 (46-48) Cross Sections (Seg4B).dwg Jul 31, 2018 - 11:36am

Print Date: Jul 31, 2018	Sheet Revisions			As Constructed	ARROYO HONDO TRAIL CROSS SECTIONS		Project No./Code
File Name: 12126 (46-48) Cross Sections (Seg4B).dwg	Date:	Comments	Init.	No Revisions:			Arroyo Hondo Trail
Horiz. Scale: Vert. Scale: As Noted				Revised:	Designer: SJB	Structure Numbers	325-12126
Unit Information Unit Leader Initials					Detailer: LX		
				Void:	Sheet Subset: X-13	Subset Sheets: 13	51

Loris A DIVISION OF OTAK

SANTA FE COUNTY

GENERAL CONDITIONS NOTES

1. Work performed shall comply with the following:
   A. These General Notes, and Construction Documents and Specifications.
   B. All applicable local, state,and federal codes, ordinances and regulations. All codes listed in Specifications and Drawings shall be inclusive of all codes, regulations and requirements adopted by the State of New Mexico, including all Amendments.

2. Source of base information is Loris and Associates, Inc., and is assumed to be correct. Report any discrepancies immediately to the Owner's representative.

3. Verify locations of pertinent site improvements installed under other contracts. If any part of this plan cannot be followed due to site conditions, contact owner's representative for instructions prior to commencing work.

4. Contact local underground utility services for utility location and identification, prior to commencing work.

5. Perform excavation in the vicinity of underground utilities with care and by hand, if necessary. The contractor bears full responsibility for this work and disruption of damage to utilities shall be repaired immediately and at no expense to the owner.

LAYOUT NOTES

1. On-site verification of all dimensions and conditions shall be the responsibility of the General Contractor. Noted dimensions take precedence over scale, larger scale over smaller scale, addenda and clarifications over previous documents.

2. Contractor to lay out site improvements and verify layout with Landscape Architect prior to construction. Any discrepancies or conflicts with existing conditions or other drawings shall be reported to the Landscape Architect immediately for proper clarification or adjustment.

3. For dimensions of new construction and related work, refer to the engineering drawings.

4. Where dimensions are called as "equal," space referenced items equally, measured to their center lines.

5. Measurements are to edge of trail tread or fixed site improvement. Dimensions to center lines is as indicated.

7. Install intersecting elements at 90 degree angles to each other unless otherwise noted.

SIGNAGE NOTES

1. Fabricator / installer shall be responsible for providing permits, work, and materials in accordance with all codes, ordinances and regulations applicable at the project location. Where applicable, approved drawings from a structural engineer licensed in New Mexico shall be supplied by the fabricator.

2. These drawings are intended to provide sufficient information to convey general design intent to the sign fabricator / installer. Additional technical information, shop drawings, and detailing is required to be submitted by the sign fabricator to the architect for review and comment. It is the sign fabricator / installer's responsibility to supply sufficient information for the successful completion of this project.

3. Sign fabricator / installer shall be responsible for checking contract documents, field conditions, and dimensions for accuracy and confirming that all work is buildable as shown before proceeding with fabrication. If there are any discrepancies or omissions which would interfere with satisfactory completion of the work, the sign fabricator / installer shall obtain a clarification from the architect / designer before proceeding with the work in question.

4. Dimensions are not adjustable, unless noted (+/-). Do not scale drawings.

5. Sign fabricator / installer is responsible for the means, methods, and techniques of installation, safety precautions in connection with the work, and for the acts or omissions of the subcontractors.

6. Install all manufactured items, materials, and equipment in strict accordance with manufacturer's recommended specifications.

7. Sign fabricator / installer shall maintain site in a clean and orderly condition at all times.

8. Sign fabricator / installer shall protect all surfaces not involved in the work from any damage.

9. Sign fabricator / installer shall repair all surfaces damaged during the installation of the sign system.

10. All materials and workmanship shall be guaranteed by the sign fabricator / installer for one (1) year from the date of substantial completion.

11. Sign fabricator / installer shall provide adequate erosion control during the course of the project.

12. Standardization of Sign Location + Mounting Heights: Signs requiring different decisions by the road / trail user shall be spaced sufficiently using the MUTCD Standards as a guideline. Signs installed at the side of the road in rural districts shall be at least 5 ft., measured from the bottom of the sign to the near edge of the pavement. Where parking or pedestrian movements occur, the clearance to the bottom of the sign shall be at least 7 ft. clearance above grade.

13. All graphics shall be supplied in digital EPS (encapsulated postscript) form. All type shall be outlined and supplied in digital EPS or PDF (Portable Document Format) form.

14. Actual sign locations to be verified with municipality representative and the architect prior to installation.

15. Sign fabricator / installer shall be responsible for contacting utility representatives before the start of the project.

TABLE OF ABBREVIATIONS

APPROX	APPROXIMATE
ARCH	ARCHITECT
AVG	AVERAGE
B+B	BALLED AND BURLAPPED
BF	BOTTOM OF FOOTING
BLDG	BUILDING
BM	BENCHMARK
BOC	BACK OF CURB
BR	BOTTOM OF RAMP
BS	BOTTOM OF STEP
BW	BOTTOM OF WALL
CAL	CALIPER
CAP	CAPACITY
CF	CUBIC FEET
CHAM	CHAMFER
CIP	CAST IN PLACE
CJ	CONTROL JOINT
CL	CENTER LINE
CLR	CLEARANCE
CM	CENTIMETER
CO	CLEAN OUT
COMP	COMPACTED
CONC	CONCRETE
CONST	CONSTRUCTION
CONT	CONTINUOUS
CONTR	CONTRACTOR
CU	CUBIC
CY	CUBIC YARD
DEMO	DEMOLISH, DEMOLITION
DIA	DIAMETER
DIM	DIMENSION
DTL	DETAIL
DWG	DRAWING
E	EAST
EA	EACH
EJ	EXPANSION JOINT
EL	ELEVATION
ELEC	ELECTRICAL
ENG	ENGINEER
EQ	EQUAL
EQUIP	EQUIPMENT
EST	ESTIMATE
E.W.	EACH WAY
EXIST	EXISTING
EXP	EXPANSION, EXPOSED
FFE	FINISHED FLOOR ELEVATION
FG	FINISHED GRADE
FIN	FINISH
FL	FLOW LINE
FOW	FACE OF WALL
FT	FOOT (FEET)
FTG	FOOTING
GA	GAUGE
GAL	GALVANIZED
GEN	GENERAL
HORIZ	HORIZONTAL
HP	HIGH POINT
HT	HEIGHT
ID	INSIDE DIAMETER
INV	INVERT ELEVATION
IN	INCH(ES)
INCL	INCLUDE(D)
IRR	IRRIGATION
JT	JOINT
LIN	LINEAR
LF	LINEAR FEET
LP	LOW POINT
LT	LIGHT
MATL	MATERIAL
MAX	MAXIMUM
MEMB	MEMBRANE
MD	MAIN DISCONNECT SWITCH
MH	MANHOLE
MIN	MINIMUM
MISC	MISCELLANEOUS
N	NORTH
NIC	NOT IN CONTRACT
NO	NUMBER
NOM	NOMINAL
NTS	NOT TO SCALE
OC	ON CENTER
OD	OUTSIDE DIAMETER
OPP	OPPOSITE
PAR	PARALLEL
PC	POINT OF CURVATURE
PE	POLYURETHANE
PERF	PERFORATED
PED	PEDESTRIAN
PI	POINT OF INTERSECTION
PL	PROPERTY LINE
PT	POINT, POINT OF TANGENCY
PVC	POLYVINYL CHLORIDE
PVMT	PAVEMENT
PVR	PAVER
QTY	QUANTITY
R	RADIUS
REF	REFERENCE
REG.	REGULATORY
REINF	REINFORCE(D)
REQ'D	REQUIRED
REV	REVISION, REVISED
ROW	RIGHT OF WAY
RT	RIGHT
S	SOUTH
SS	SANITARY SEWER
SCH	SCHEDULE
SD	STORM DRAIN
SEC	SECTION
SF	SQUARE FOOT (FEET)
SHT	SHEET
SIM	SIMILAR
SNT	SEALANT
SPECS	SPECIFICATIONS
SQ	SQUARE
ST	STORM SEWER
SY	SQUARE YARD
STA	STATION
STD	STANDARD
STL	STEEL
STRL	STRUCTURAL
SYM	SYMMETRICAL
T&B	TOP AND BOTTOM
TBC	TOP OF BACK CURB
TC	TOP OF CURB
TECH	TECHNICAL
TF	TOP OF FOOTING
TRANS	ELECTRIC TRANSFORMER
TOC	TOP OF CONCRETE
TOPO	TOPOGRAPHY
TR	TOP OF RAMP
TSL	TOP OF SLAB
TS	TOP OF STEP
TW	TOP OF WALL
TYP	TYPICAL
VAR	VARIES
VERT	VERTICAL
VEH	VEHICLE
VOL	VOLUME
W/	WITH
W/O	WITHOUT
WT	WEIGHT
WWF	WELDED WIRE FABRIC
YD	YARD
@	AT

KEY MAP

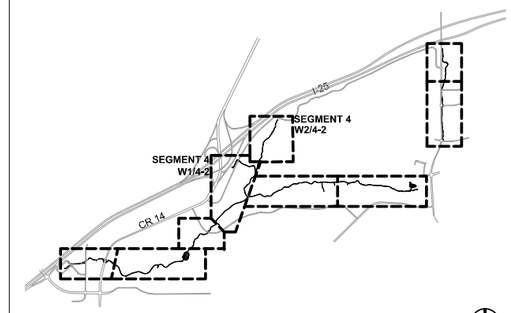

KEY MAP

NTS

WAYFINDING SIGNAGE SHEET LIST

W1-1	GENERAL NOTES AND KEY MAP
W4-2	SEGMENT 4 WAYFINDING PLAN
W4-3	SEGMENT 4 SIGN CONTENT MATRIX
W-1	SIGN DETAILS
W-2	SIGN DETAILS
W-3	SIGN DETAILS
W-4	SIGN DETAILS

design office
landscape planning urbanism

DESIGN OFFICE
1300 Luisa street, Suite 24
Santa Fe, NM 87505
t 505.983.1415
www.do-designoffice.com

FINAL PS&E SUBMITTAL - 2018/07/02

Print Date:		Sheet Revisions			
File Name:		Date:	Comments	Init.	
Horiz. Scale:	Vert. Scale: As Noted				
Unit Information	Unit Leader Initials				

Loris and Associates, Inc.
100 Superior Plaza Way
Suite 220
Louisville, Colorado 80027
303.444.2073
www.LorisandAssociates.com

FABRICATION SHOP DRAWINGS REQUIRED
NOT FOR CONSTRUCTION

As Constructed
No Revisions:
Revised:
Void:

ARROYO HONDO TRAIL SYSTEM
WAYFINDING PLAN
(GENERAL NOTES)

Designer:
Detailer:
Structure Numbers
Sheet Subset: **W1-1**
Subset Sheets: **5**

Project No./Code
Arroyo Hondo Trail
325-12126

1 W4 - 2 SEGMENT 4 - SOUTH

SCALE: 1" = 200'-0" PLAN

2 W4 - 2 SEGMENT 4 - NORTH

SCALE: 1" = 200'-0" PLAN

WAYFINDING LEGEND

- MATCH LINE
- PROPOSED TRAIL
- # INTERSECTION NUMBER
- VEHICULAR MONUMENT SIGN
- KIOSK SIGN - PRIMARY
- KIOSK SIGN - SECONDARY
- ORIENTATION SIGN
- DIRECTIONAL SIGN - THREE DIRECTIONS
- OR DIRECTIONAL SIGN - TWO DIRECTIONS
- DIRECTIONAL SIGN - ONE DIRECTION
- MARKER - RULES SIGN
- MARKER

SYMBOL KEY

X-#.#

- SIGN NUMBER
- INTERSECTION NUMBER
- SIGN TYPE
  - V: VEHICULAR
  - K: KIOSK
  - O: ORIENTATION
  - D: DIRECTIONAL
  - M: MARKER

SEE SHEET WX.X FOR SIGN SCHEDULE WITH SIGN CONTENT

GENERAL LAYOUT NOTES

1. WAYFINDING SIGN LOCATIONS ARE FOR GRAPHIC PURPOSES ONLY. FINAL LOCATIONS OF ALL SIGNS TO BE FLAGGED BY LANDSCAPE ARCHITECT AND VERIFIED IN FIELD.
2. ALL SIGNS WITH MAPS TO BE INSTALLED TO BE VISIBLE WHEN ORIENTED DUE NORTH (I.E. MAP CONTENT TO FACE DUE SOUTH). CONFIRM FINAL ORIENTATION AND LOCATION OF SIGNS WITH MAPS IN FIELD WITH LANDSCAPE ARCHITECT.
3. ALL SIGN POSTS TO BE LOCATED PARALLEL TO TRAIL TREAD AT A MINIMUM OF 2' CLEAR FROM EDGE OF DEFINED TRAIL TREAD, UNLESS OTHERWISE NOTED.
4. COORDINATE FINAL LOCATION OF WAYFINDING SIGNAGE WITH CONSTRUCTED TRAIL FEATURES, EXISTING VEGETATION, AND PROPOSED MUTCD SIGNAGE.

WAYFINDING KEYED NOTES

1. PROPOSED MONUMENT SIGN LOCATION TO BE AT JUNCTURE WITH RANCHO VIEJO FIRESTATION / TRAILHEAD PARKING LOT ACCESS ALONG RANCHO VIEJO BLVD.; VERFY LOCATION IN FIELD; OBTAIN PROPERTY OWNER PERMISSION IF NECESSARY AND VERIFY VISUAL SAFETY CLEARANCES TO COMPLY WITH LOCAL CODES.

SCALE: 1" = 200'-0"

0' 100' 200' 400' 600'

design office
landscape planning urbanism

DESIGN OFFICE
1300 Luisa street, Suite 24
Santa Fe, NM 87505
t 505.983.1415
www.do-designoffice.com

FINAL PS&E SUBMITTAL - 2018/07/02

Print Date:	Sheet Revisions	Loris and Associates, Inc.	FABRICATION SHOP DRAWINGS REQUIRED NOT FOR CONSTRUCTION
File Name:	Date: / Comments / Init.	100 Superior Plaza Way, Suite 220, Louisville, Colorado 80027, 303.444.2073, www.LorisandAssociates.com	
Horiz. Scale: / Vert. Scale: As Noted			
Unit Information / Unit Leader Initials			

As Constructed	ARROYO HONDO TRAIL SYSTEM WAYFINDING PLAN (SEGMENT 4)		Project No./Code
No Revisions:			Arroyo Hondo Trail
Revised:	Designer:	Structure Numbers	325–12126
Void:	Detailer:		
	Sheet Subset: W4-2	Subset Sheets: 5	53

SIGN CONTENT MATRIX

VEHICULAR MONUMENT SIGNS

SIGN NUMBER	V-10-1				
HEADER PANEL	2				
SUB HEADER PANEL (CONTENT)					
"RAIL RUNNER TRAILHEAD"					
"VELOCITY WAY TRAILHEAD"					
"FIRE STATION TRAILHEAD"	2				

KIOSK SIGNS

SIGN NUMBER	K-10-2	K-13-1	K-14-1		
PRIMARY KIOSK SIGN					
HEADER PANEL	2				
MAP	1				
RULES	1				
SUB HEADER PANEL (CONTENT)					
"RAIL RUNNER TRAILHEAD"					
"VELOCITY WAY TRAILHEAD"					
"FIRE STATION TRAILHEAD"	2				
SECONDARY KIOSK SIGN					
HEADER PANEL		2	2		
MAP		1	1		
RULES		1	1		

ORIENTATION MAP SIGNS

SIGN NUMBER	O-11-1				
HEADER PANEL	1				
MAP	1				
DIRECTIONAL PANEL (CONTENT)					
"ARROYO HONDO TRAIL NORTH"	←				
"RAIL RUNNER STATION"					
"SF COMMUNITY COLLEGE"					

MARKER SIGNS

SIGN NUMBER	M-13-4	M-13-5			
HEADER PANEL	1	1			
TRAIL YIELD PANEL	1	1			
RULES PANEL	1	1			
DISTANCE PANEL (CONTENT)					

DIRECTIONAL SIGNS

SIGN NUMBER SIDE (A, B, C, OR D)	D-10-3 A	D-10-3 B	D-10-3 C	D-10-3 D	BLANK COLOR	D-12-1 A	D-12-1 B	D-12-1 C	D-12-1 D	BLANK COLOR	D-13-2 A	D-13-2 B	D-13-2 C	D-13-2 D	BLANK COLOR	D-13-3 A	BLANK COLOR
TOTAL PANEL QUANTITY	2	1	1	1	2	2	1	1	1	2	1	1	1	2	2	2	1
HEADER PANEL (DOUBLE SIDED)	1					1								1		1	
DIRECTIONAL PANEL (CONTENT) *see plans																	
"RAIL RUNNER STATION"	←				1												
"SF COMMUNITY COLLEGE"				→	1												
"EAST FRONTAGE ROAD"																	
"FOREST LANE"																	
"COUNTY ROAD 14"												→	←				
"CARSON VALLEY WAY"																	
"RANCHO VIEJO BLVD"																	
"ARROYO HONDO TRAIL NORTH"									←	1							
"VIA PUNTO NUEVO"																	
"CAMINITO DE LAS ROSITAS"																	
"VILLA ORILLA DORADO"																	
"VELOCITY WAY TRAILHEAD"																	
"FIRE STATION TRAILHEAD"		→	←														
"ARROYO HONDO TRAIL"						→				1				→	1		
"FASHION OUTLETS OF SANTA FE"							←	→			←				1	←	1

GENERAL NOTES MATRIX CONTENT

1. SIGN CONTENT MATRIX FOR BIDDING PURPOSES ONLY; CONFIRM FINAL GRAPHIC CONTENT WITH ARCHITECT PRIOR TO FABRICATION OF SIGNAGE.
2. REFER TO SIGN CONTENT MATRIX FOR CONTENT UNIQUE TO EACH SIGN TYPE.

DETAIL KEY

VEHICULAR SIGN	DETAIL
HEADER PANEL	1/W-4
SUB HEADER PANEL	1/W-4
KIOSK SIGN	
PRIMARY KIOSK SIGN	
HEADER PANEL	2/W-4
SUB HEADER PANEL	2/W-4
MAP PANEL	3/W-4
RULES PANEL	4/W-4
SECONDARY KIOSK SIGN	
HEADER PANEL	5/W-4
MAP PANEL	6/W-4
RULES PANEL	7/W-4
ORIENTATION SIGNS	
HEADER PANEL	9/W-4
DIRECTIONAL PANEL	9/W-4
MAP PANEL	8/W-4

MARKER	DETAIL
HEADER PANEL	11/W-4
TRAIL YIELD PANEL	13/W-4
RULES PANEL	14/W-4
DISTANCE PANEL	12/W-4
DIRECTIONAL SIGN	
HEADER PANEL	10/W-4
DIRECTIONAL PANEL	10/W-4

FINAL PS&E SUBMITTAL - 2018/07/02

design office
landscape planning urbanism

DESIGN OFFICE
1300 Luisa street, Suite 24
Santa Fe, NM 87505
t 505.983.1415
www.do-designoffice.com

Print Date:
File Name:
Horiz. Scale: Vert. Scale: As Noted
Unit Information Unit Leader Initials

Sheet Revisions

Date:	Comments	Init.

Loris and Associates, Inc.
100 Superior Plaza Way
Suite 220
Louisville, Colorado 80027
303.444.2073
www.LorisandAssociates.com

FABRICATION SHOP DRAWINGS REQUIRED
NOT FOR CONSTRUCTION

As Constructed
No Revisions:
Revised:
Void:

ARROYO HONDO TRAIL SYSTEM
WAYFINDING PLAN
(SEGMENT 4 SIGN CONTENT MATRIX)

Designer:
Detailer:
Structure Numbers
Sheet Subset: W4-3
Subset Sheets: 5

Project No./Code
Arroyo Hondo Trail
325-12126

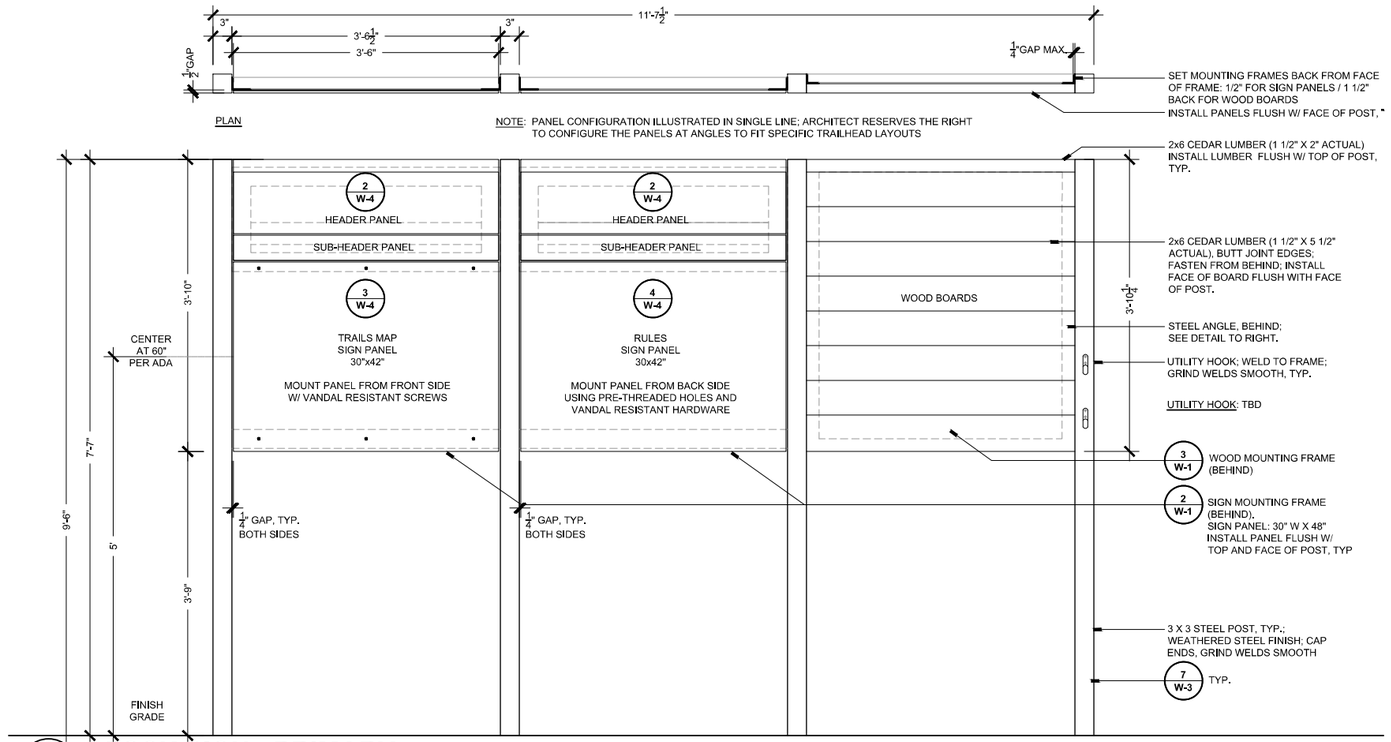

1 KIOSK SIGN - PRIMARY

ELEVATION

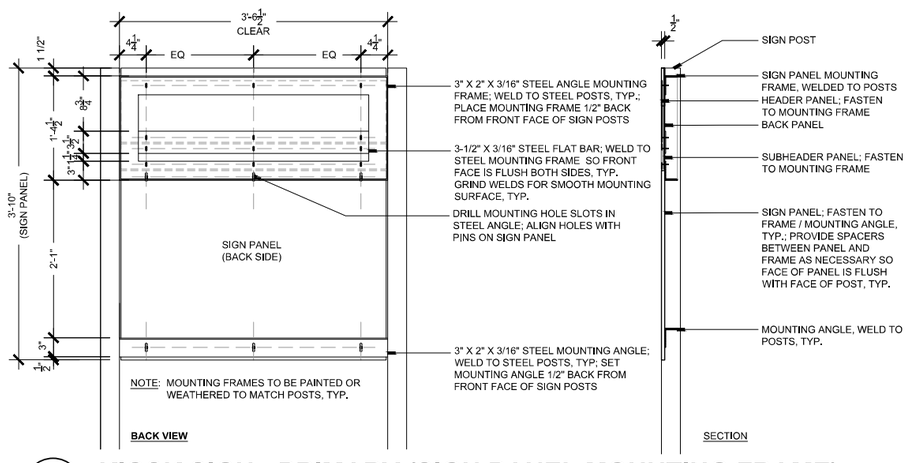

2 KIOSK SIGN - PRIMARY (SIGN PANEL MOUNTING FRAME)

SCALE: 1"=1'-0"

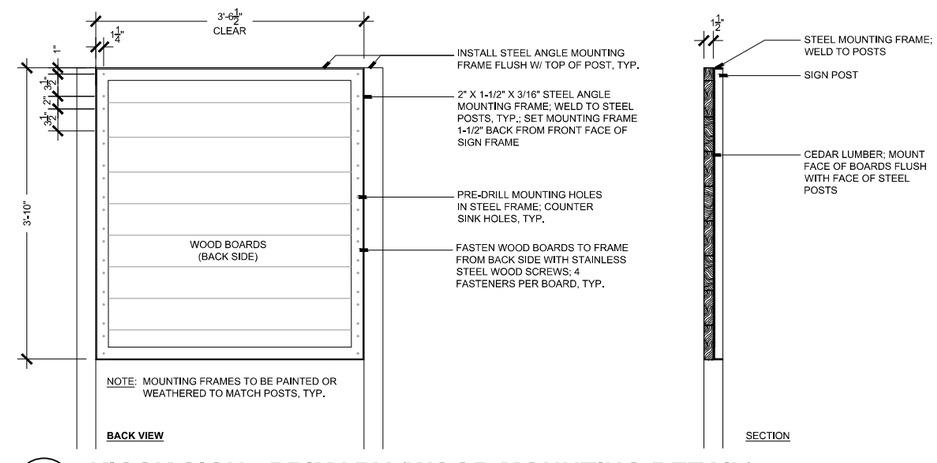

3 KIOSK SIGN - PRIMARY (WOOD MOUNTING DETAIL)

SCALE: 1"=1'-0"

These documents are intended to illustrate design intent and should only be used as a general guideline. No information contained here should be construed as engineered elements. The fabricator / contractor shall be responsible for all structural, electrical, mechanical, and foundation engineering and specifications.

design office
landscape planning urbanism

DESIGN OFFICE
1300 Luisa street, Suite 24
Santa Fe, NM 87505
t 505.983.1415
www.do-designoffice.com

FINAL PS&E SUBMITTAL - 2018/07/02

Print Date:		Sheet Revisions	
File Name:		Date:	Comments	Init.
Horiz. Scale:	Vert. Scale: As Noted		
Unit Information	Unit Leader Initials		

Loris and Associates, Inc.
100 Superior Plaza Way
Suite 220
Louisville, Colorado 80027
303.444.2073
www.LorisandAssociates.com

FABRICATION SHOP DRAWINGS REQUIRED
NOT FOR CONSTRUCTION

As Constructed	ARROYO HONDO TRAIL SYSTEM WAYFINDING PLAN (DETAILS)		Project No./Code
No Revisions:			Arroyo Hondo Trail
Revised:	Designer:	Structure Numbers	325–12126
Void:	Detailer:		
	Sheet Subset: W-1	Subset Sheets: 5	# 55

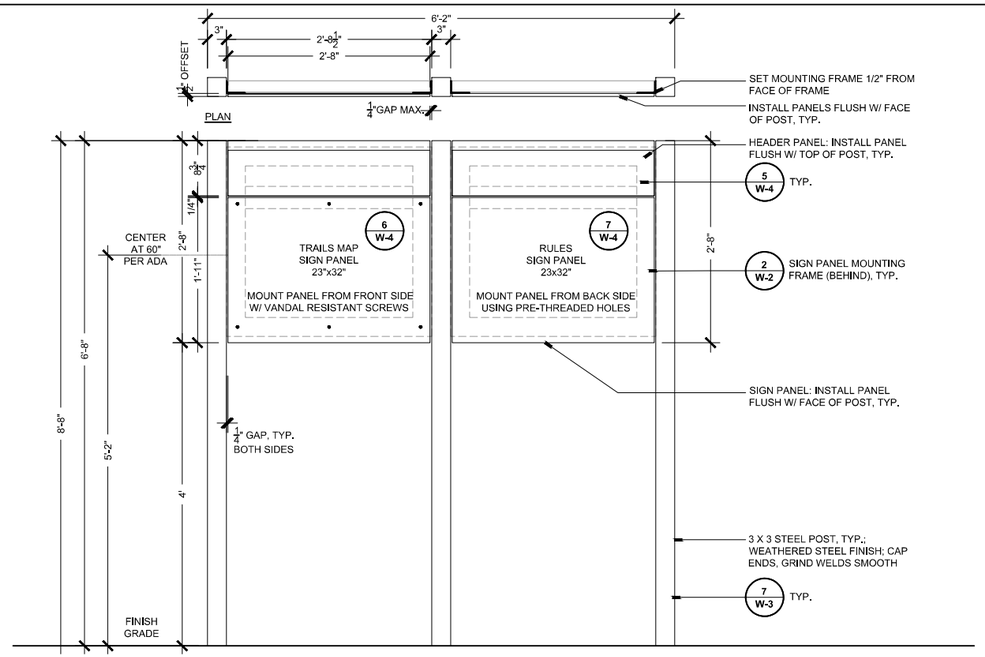

1 KIOSK SIGN - SECONDARY

ELEVATION

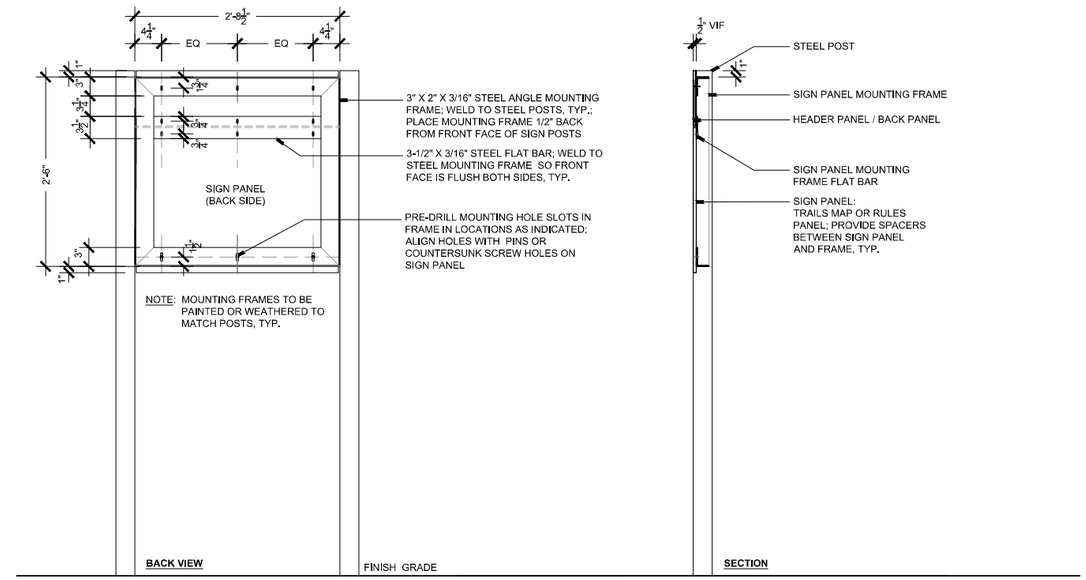

2 KIOSK SIGN - SECONDARY - SIGN PANEL MOUNTING FRAME DETAILS

SCALE: 1"=1'-0"

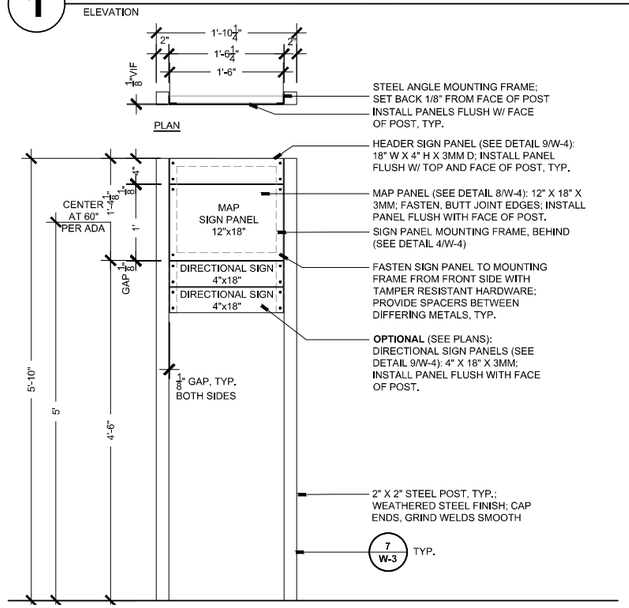

3 ORIENTATION MAP SIGN

SCALE: 1"=1'-0"

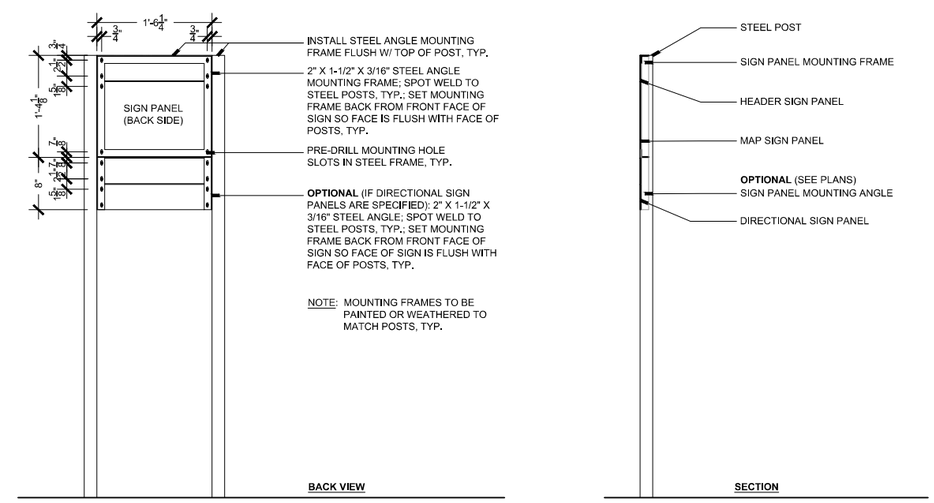

4 ORIENTATION MAP SIGN - SIGN PANEL MOUNTING FRAME DETAILS

SCALE: 1"=1'-0"

These documents are intended to illustrate design intent and should only be used as a general guideline. No information contained here should be construed as engineered elements. The fabricator / contractor shall be responsible for all structural, electrical, mechanical, and foundation engineering and specifications.

design office
landscape planning urbanism

DESIGN OFFICE
1300 Luisa street, Suite 24
Santa Fe, NM 87505
t 505.983.1415
www.do-designoffice.com

FINAL PS&E SUBMITTAL - 2018/07/02

Print Date:	Sheet Revisions		
File Name:	Date:	Comments	Init.
Horiz. Scale: Vert. Scale: As Noted			
Unit Information Unit Leader Initials			

Loris and Associates, Inc.
100 Superior Plaza Way
Suite 220
Louisville, Colorado 80027
303.444.2073
www.LorisandAssociates.com

FABRICATION SHOP DRAWINGS REQUIRED NOT FOR CONSTRUCTION

As Constructed
No Revisions:
Revised:
Void:

ARROYO HONDO TRAIL SYSTEM WAYFINDING PLAN (DETAILS)

Designer:
Detailer:
Structure Numbers
Sheet Subset: **W-2**
Subset Sheets: **5**

Project No./Code
Arroyo Hondo Trail
325–12126
56

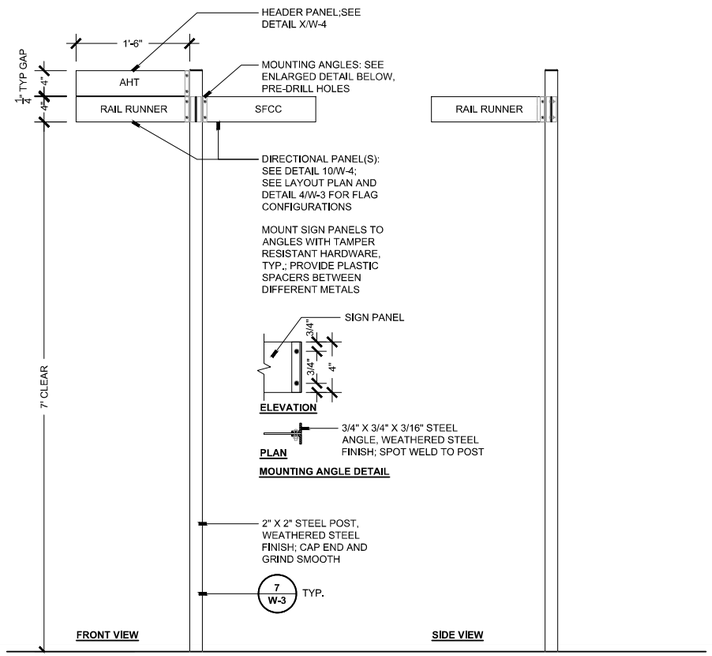

1 DIRECTIONAL SIGN

ELEVATION

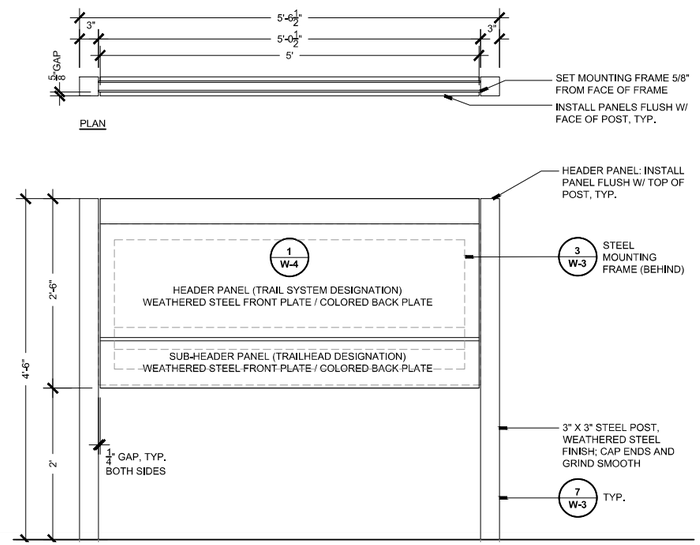

2 VEHICULAR MONUMENT SIGN

SCALE: 1"=1'-0"

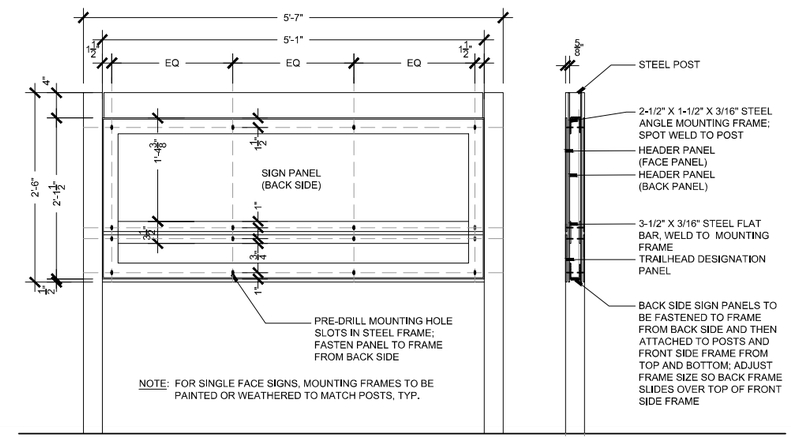

3 VEHICULAR MONUMENT SIGN - MOUNTING DETAILS

SCALE: 1"=1'-0"

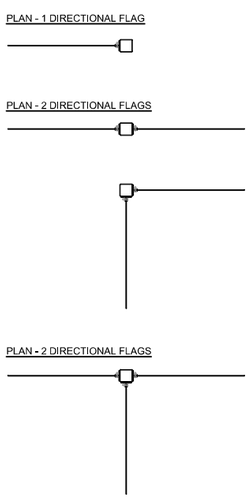

4 DIRECTIONAL SIGN PLAN VIEW

SCALE: 1"=1'-0"

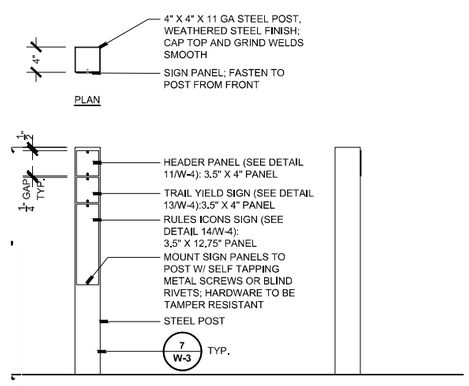

5 MARKER - RULES SIGN

SCALE: 1"=1'-0"

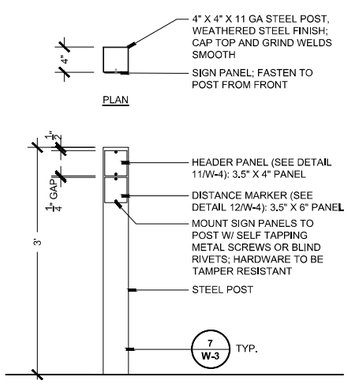

6 MARKER

SCALE: 1"=1'-0"

CONTRACTOR TO ADJUST FOOTING
DESIGN PER STRUCTURAL ENGINEER RECOMMENDATION TO MEET LOCAL WIND LOAD REQUIREMENTS

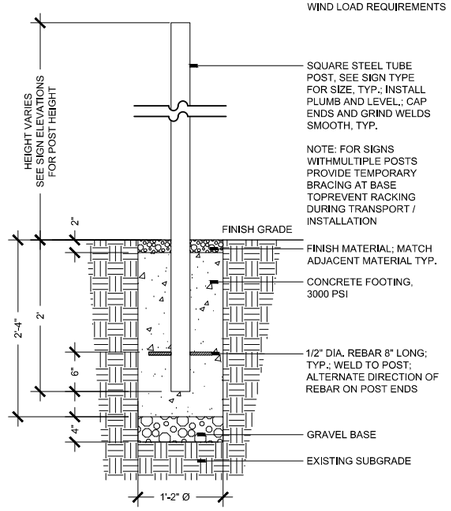

7 SIGN POST FOOTING

SCALE: 1"=1'-0"

These documents are intended to illustrate design intent and should only be used as a general guideline. No information contained here should be construed as engineered elements. The fabricator / contractor shall be responsible for all structural, electrical, mechanical, and foundation engineering and specifications.

design office
landscape planning urbanism

DESIGN OFFICE
1300 Luisa street, Suite 24
Santa Fe, NM 87505
t 505.983.1415
www.do-designoffice.com

FINAL PS&E SUBMITTAL - 2018/07/02

Print Date:		Sheet Revisions	
File Name:		Date:	Comments	Init.
Horiz. Scale:	Vert. Scale: As Noted		
Unit Information	Unit Leader Initials		

Loris and Associates, Inc.
100 Superior Plaza Way
Suite 220
Louisville, Colorado 80027
303.444.2073
www.LorisandAssociates.com

FABRICATION SHOP DRAWINGS REQUIRED
NOT FOR CONSTRUCTION

As Constructed	ARROYO HONDO TRAIL SYSTEM WAYFINDING PLAN (DETAILS)		Project No./Code
No Revisions:			Arroyo Hondo Trail
Revised:	Designer:	Structure Numbers	325–12126
Void:	Detailer:		
	Sheet Subset: W-3	Subset Sheets: 5	57

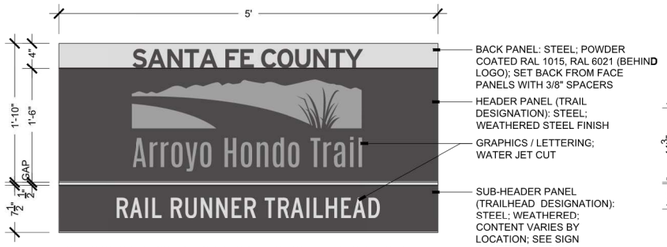

NOTE: SIGN GRAPHICS ARE FOR INFORMATION ONLY AND TO BE USED SOLELY FOR REFERENCE BY CONTRACTOR. FINAL SIGN GRAPHICS TO BE SUPPLIED BY ARCHITECT. RAL COLORS FOR BIDDING PURPOSES ONLY.

CONTRACTOR TO PROVIDE APPROPRIATE MATERIAL THICKNESS FOR SIGN STABILITY AND TO PREVENT OIL PANNING OR OTHER SURFACE IRREGULARITIES.

1 HEADER PANEL VEHICULAR MONUMENT SIGN

ELEVATION

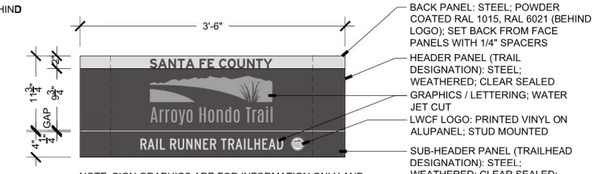

NOTE: SIGN GRAPHICS ARE FOR INFORMATION ONLY AND TO BE USED SOLELY FOR REFERENCE BY CONTRACTOR. FINAL SIGN GRAPHICS TO BE SUPPLIED BY ARCHITECT. RAL COLORS FOR BIDDING PURPOSES ONLY.

CONTRACTOR TO PROVIDE APPROPRIATE MATERIAL THICKNESS FOR SIGN STABILITY AND TO PREVENT OIL PANNING OR OTHER SURFACE IRREGULARITIES.

2 HEADER PANEL PRIMARY KIOSK SIGN

SCALE: 1"=1'-0"

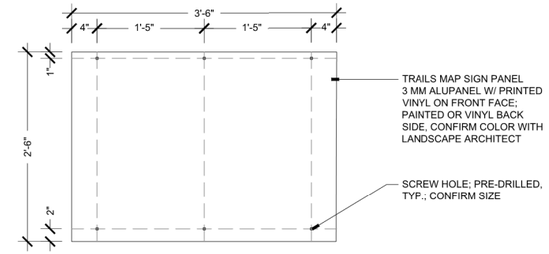

NOTE: SIGN GRAPHICS ARE FOR INFORMATION ONLY AND TO BE USED SOLELY FOR REFERENCE BY CONTRACTOR. FINAL SIGN GRAPHICS TO BE SUPPLIED BY ARCHITECT.

3 MAP PANEL PRIMARY KIOSK SIGN

SCALE: 1"=1'-0"

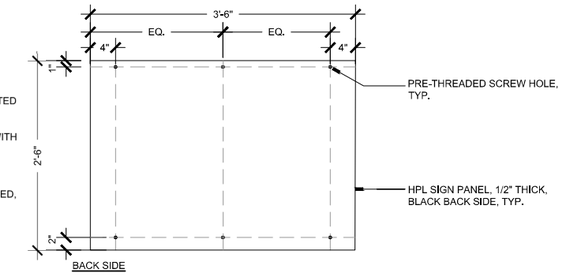

4 RULES PANEL PRIMARY KIOSK SIGN

SCALE: 1"=1'-0"

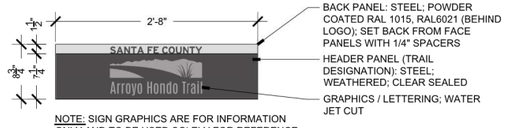

NOTE: SIGN GRAPHICS ARE FOR INFORMATION ONLY AND TO BE USED SOLELY FOR REFERENCE BY CONTRACTOR. FINAL SIGN GRAPHICS TO BE SUPPLIED BY ARCHITECT. RAL COLORS FOR BIDDING PURPOSES ONLY.

CONTRACTOR TO PROVIDE APPROPRIATE MATERIAL THICKNESS FOR SIGN STABILITY AND TO PREVENT OIL PANNING OR OTHER SURFACE IRREGULARITIES.

5 HEADER PANEL SECONDARY KIOSK SIGN

SCALE: 1"=1'-0"

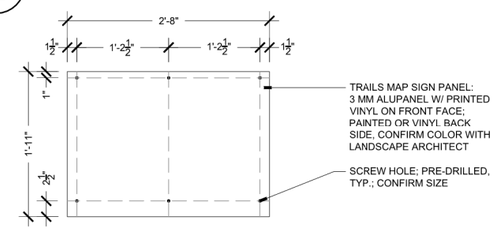

NOTE: SIGN GRAPHICS ARE FOR INFORMATION ONLY AND TO BE USED SOLELY FOR REFERENCE BY CONTRACTOR. FINAL SIGN GRAPHICS TO BE SUPPLIED BY ARCHITECT.

6 MAP PANEL SECONDARY KIOSK SIGN

SCALE: 1"=1'-0"

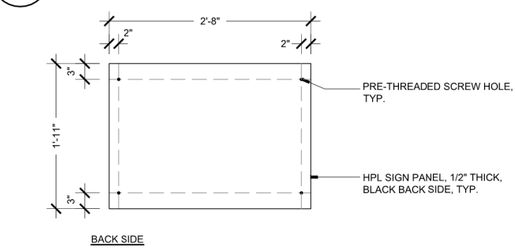

7 RULES PANEL SECONDARY KIOSK SIGN

SCALE: 1"=1'-0"

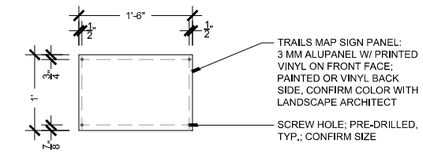

NOTE: SIGN GRAPHICS ARE FOR INFORMATION ONLY AND TO BE USED SOLELY FOR REFERENCE BY CONTRACTOR. FINAL SIGN GRAPHICS TO BE SUPPLIED BY ARCHITECT.

8 MAP PANEL ORIENTATION SIGN

SCALE: 1"=1'-0"

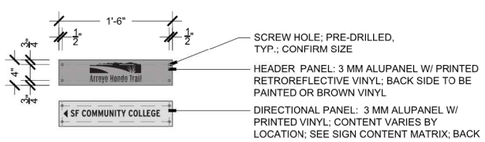

NOTE: SIGN GRAPHICS ARE FOR INFORMATION ONLY AND TO BE USED SOLELY FOR REFERENCE BY CONTRACTOR. FINAL SIGN GRAPHICS TO BE SUPPLIED BY ARCHITECT.

9 HEADER / DIRECTIONAL PANELS ORIENTATION SIGN

SCALE: 1"=1'-0"

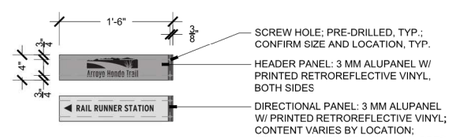

NOTE: SIGN GRAPHICS ARE FOR INFORMATION ONLY AND TO BE USED SOLELY FOR REFERENCE BY CONTRACTOR. FINAL SIGN GRAPHICS TO BE SUPPLIED BY ARCHITECT.

10 HEADER / DIRECTIONAL PANELS DIRECTIONAL FLAG

SCALE: 1"=1'-0"

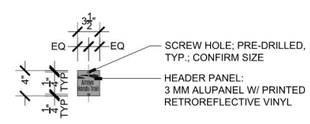

NOTE: SIGN GRAPHICS ARE FOR INFORMATION ONLY AND TO BE USED SOLELY FOR REFERENCE BY CONTRACTOR. FINAL SIGN GRAPHICS TO BE SUPPLIED BY ARCHITECT.

11 HEADER PANEL RULES MARKER / TRAIL MARKER

SCALE: 1"=1'-0"

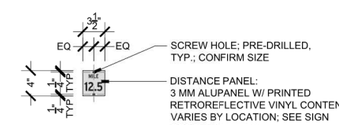

NOTE: SIGN GRAPHICS ARE FOR INFORMATION ONLY AND TO BE USED SOLELY FOR REFERENCE BY CONTRACTOR. FINAL SIGN GRAPHICS TO BE SUPPLIED BY ARCHITECT.

12 DISTANCE PANEL TRAIL MARKER

SCALE: 1"=1'-0"

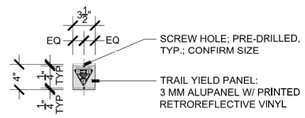

NOTE: SIGN GRAPHICS ARE FOR INFORMATION ONLY AND TO BE USED SOLELY FOR REFERENCE BY CONTRACTOR. FINAL SIGN GRAPHICS TO BE SUPPLIED BY ARCHITECT.

13 TRAIL YIELD PANEL RULES MARKER

SCALE: 1"=1'-0"

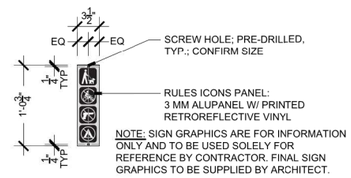

NOTE: SIGN GRAPHICS ARE FOR INFORMATION ONLY AND TO BE USED SOLELY FOR REFERENCE BY CONTRACTOR. FINAL SIGN GRAPHICS TO BE SUPPLIED BY ARCHITECT.

14 RULES PANEL RULES MARKER

SCALE: 1"=1'-0"

These documents are intended to illustrate design intent and should only be used as a general guideline. No information contained here should be construed as engineered elements. The fabricator / contractor shall be responsible for all structural, electrical, mechanical, and foundation engineering and specifications.

design office
landscape planning urbanism

DESIGN OFFICE
1300 Luisa street, Suite 24
Santa Fe, NM 87505
t 505.983.1415
www.do-designoffice.com

FINAL PS&E SUBMITTAL - 2018/07/02

Print Date:	Sheet Revisions		
File Name:	Date:	Comments	Init.
Horiz. Scale: Vert. Scale: As Noted			
Unit Information Unit Leader Initials			

Loris and Associates, Inc.
100 Superior Plaza Way
Suite 220
Louisville, Colorado 80027
303.444.2073
www.LorisandAssociates.com

FABRICATION SHOP DRAWINGS REQUIRED
NOT FOR CONSTRUCTION

As Constructed			Project No./Code
No Revisions:			Arroyo Hondo Trail
Revised:	Designer:	Structure Numbers	325-12126
	Detailer:		
Void:	Sheet Subset: W-4	Subset Sheets: 5	58