Appendices

This page intentionally left blank.

Appendix A.

County Wastewater Collection System

This page intentionally left blank.

SANTA FE COUNTY UTILITIES
WASTEWATER COLLECTION

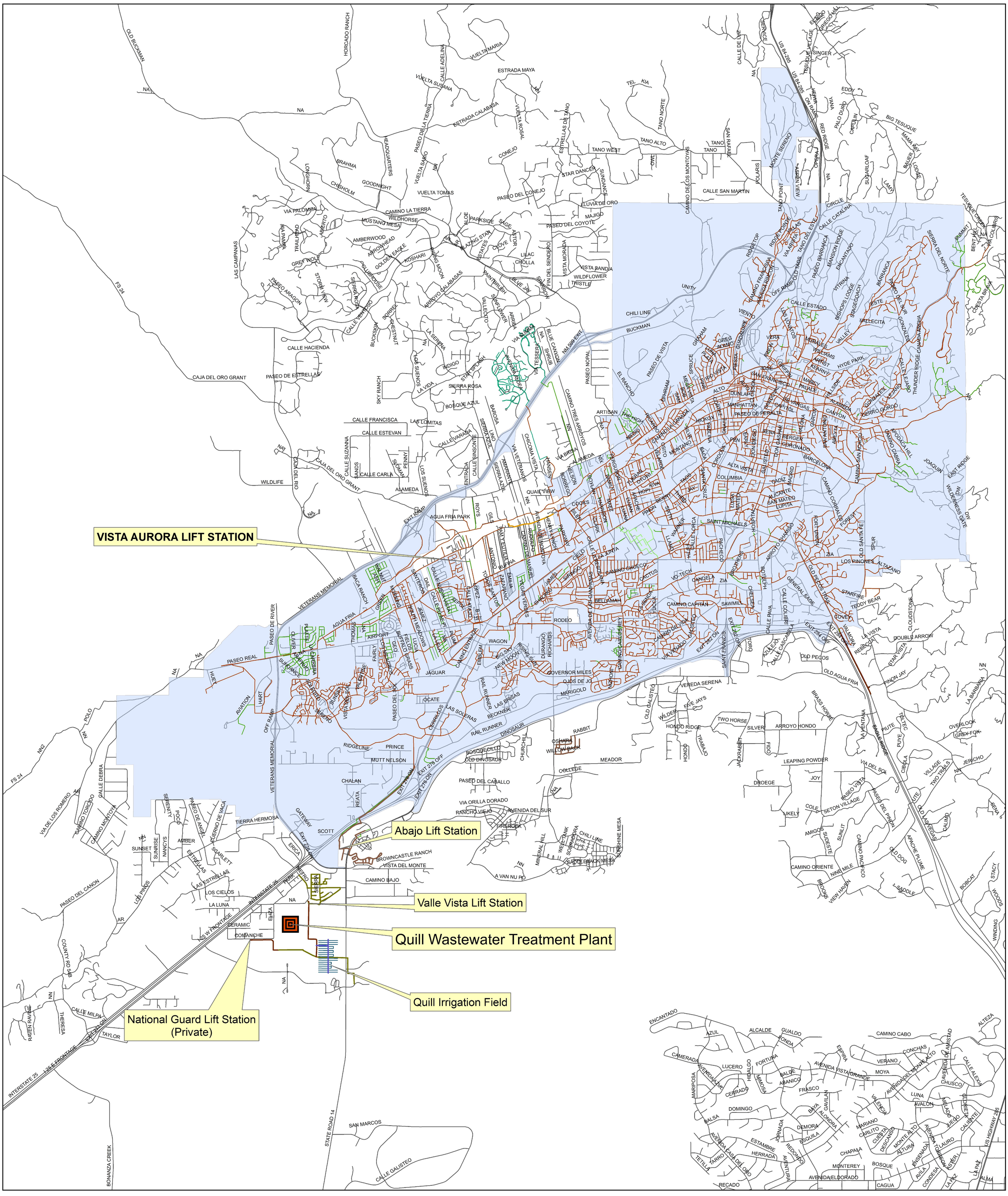

N
W E
S

Miles
0 0.325 0.65 1.3

Legend

Santa Fe County Wastewater Collection

- County File - Force Main
- County File - Gravity
- County File - Main Line
- County File - Private
- County File - Sewer
- County File - Irrigation

- SFCU Man Holes
- Roads
- City of Santa Fe

City of Santa Fe Wasterwater Collection

- City File - Wasterwater Collection
- City File - Private
- City File - Quasi
- City File - SF County

Santa Fe County
Utilities Division
May 2016

Appendix B.

Quill WWTF Data

This page intentionally left blank.

Analytical Report
Lab Order **1301189**
Date Reported: **1/18/2013**

Hall Environmental Analysis Laboratory, Inc.

CLIENT: Santa Fe County Utilities
Project: Santa Fe County Utilities
Lab ID: 1301189-001 **Matrix:** AQUEOUS

Client Sample ID: Influent
Collection Date: 1/8/2013 9:20:00 AM
Received Date: 1/8/2013 12:10:00 PM

Analyses	Result	RL	Qual	Units	DF	Date Analyzed
SM5210B: BOD						Analyst: **JAL**
Biochemical Oxygen Demand	270	2.0		mg/L	1	1/14/2013 4:18:00 AM
SM 4500 NORG C: TKN						Analyst: **TAF**
Nitrogen, Kjeldahl, Total	41	5.0		mg/L	1	1/10/2013 5:04:00 PM
SM 2540D: TSS						Analyst: **KS**
Suspended Solids	62	4.0		mg/L	1	1/8/2013 10:36:00 PM

Qualifiers:

*	Value exceeds Maximum Contaminant Level.	B	Analyte detected in the associated Method Blank
E	Value above quantitation range	H	Holding times for preparation or analysis exceeded
J	Analyte detected below quantitation limits	ND	Not Detected at the Reporting Limit
P	Sample pH greater than 2	R	RPD outside accepted recovery limits
RL	Reporting Detection Limit	S	Spike Recovery outside accepted recovery limits

Analytical Report
Lab Order **1302605**
Date Reported: **3/1/2013**

Hall Environmental Analysis Laboratory, Inc.

CLIENT: Santa Fe County Utilities
Project: Santa Fe County Utilities
Lab ID: 1302605-001 **Matrix:** AQUEOUS

Client Sample ID: Influent
Collection Date: 2/19/2013 10:00:00 AM
Received Date: 2/19/2013 11:35:00 AM

Analyses	Result	RL	Qual	Units	DF	Date Analyzed
SM5210B: BOD						Analyst: **ECH**
Biochemical Oxygen Demand	360	2.0		mg/L	1	2/25/2013 7:21:00 AM
SM 4500 NORG C: TKN						Analyst: **TAF**
Nitrogen, Kjeldahl, Total	50	5.0		mg/L	1	2/21/2013 5:45:00 AM
SM 2540D: TSS						Analyst: **KS**
Suspended Solids	270	8.0		mg/L	1	2/21/2013 1:57:00 PM

Qualifiers:

*	Value exceeds Maximum Contaminant Level.	B	Analyte detected in the associated Method Blank
E	Value above quantitation range	H	Holding times for preparation or analysis exceeded
J	Analyte detected below quantitation limits	ND	Not Detected at the Reporting Limit
P	Sample pH greater than 2	R	RPD outside accepted recovery limits
RL	Reporting Detection Limit	S	Spike Recovery outside accepted recovery limits

Analytical Report
Lab Order **1303773**
Date Reported: **4/10/2013**

Hall Environmental Analysis Laboratory, Inc.

CLIENT: Santa Fe County Utilities
Client Sample ID: Influent
Project: Santa Fe County Quill Plant @ State Pen
Collection Date: 3/20/2013 10:45:00 AM
Lab ID: 1303773-001
Matrix: AQUEOUS
Received Date: 3/20/2013 12:45:00 PM

Analyses	Result	RL	Qual	Units	DF	Date Analyzed
SM5210B: BOD						Analyst: **SUB**
Biochemical Oxygen Demand	230	5.0		mg/L	1	3/26/2013
SM 4500 NORG C: TKN						Analyst: **IDC**
Nitrogen, Kjeldahl, Total	46	1.0		mg/L	1	4/1/2013 10:45:00 AM
SM 2540D: TSS						Analyst: **KS**
Suspended Solids	53	4.0		mg/L	1	3/21/2013 12:48:00 PM

Qualifiers:

*	Value exceeds Maximum Contaminant Level.	B	Analyte detected in the associated Method Blank
E	Value above quantitation range	H	Holding times for preparation or analysis exceeded
J	Analyte detected below quantitation limits	ND	Not Detected at the Reporting Limit
P	Sample pH greater than 2	R	RPD outside accepted recovery limits
RL	Reporting Detection Limit	S	Spike Recovery outside accepted recovery limits

Analytical Report
Lab Order **1304279**
Date Reported: **4/22/2013**

Hall Environmental Analysis Laboratory, Inc.

CLIENT: Santa Fe County Utilities
Project: Santa Fe County Utilities
Lab ID: 1304279-001 **Matrix:** AQUEOUS

Client Sample ID: Influent
Collection Date: 4/8/2013 9:50:00 AM
Received Date: 4/8/2013 10:55:00 AM

Analyses	Result	RL	Qual	Units	DF	Date Analyzed
SM5210B: BOD						Analyst: **SUB**
Biochemical Oxygen Demand	430	5.0		mg/L	1	4/14/2013
SM 4500 NORG C: TKN						Analyst: **TMG**
Nitrogen, Kjeldahl, Total	45	2.0		mg/L	1	4/19/2013 9:10:00 AM
SM 2540D: TSS						Analyst: **KS**
Suspended Solids	620	40		mg/L	1	4/10/2013 2:07:00 PM

Qualifiers:

*	Value exceeds Maximum Contaminant Level.	B	Analyte detected in the associated Method Blank
E	Value above quantitation range	H	Holding times for preparation or analysis exceeded
J	Analyte detected below quantitation limits	ND	Not Detected at the Reporting Limit
P	Sample pH greater than 2	R	RPD outside accepted recovery limits
RL	Reporting Detection Limit	S	Spike Recovery outside accepted recovery limits

Analytical Report
Lab Order **1305959**
Date Reported: **6/5/2013**

Hall Environmental Analysis Laboratory, Inc.

CLIENT: Santa Fe County Utilities
Project: Quill WWTP
Lab ID: 1305959-001 **Matrix:** AQUEOUS

Client Sample ID: Influent
Collection Date: 5/23/2013 10:45:00 AM
Received Date: 5/23/2013 12:31:00 PM

Analyses	Result	RL	Qual	Units	DF	Date Analyzed	Batch
SM5210B: BOD						Analyst:	**SUB**
Biochemical Oxygen Demand	390	5.0		mg/L	1	5/29/2013	R11045
SM 4500 NORG C: TKN						Analyst:	**TMG**
Nitrogen, Kjeldahl, Total	52	1.0		mg/L	1	6/4/2013 10:56:00 AM	7714
SM 2540D: TSS						Analyst:	**KS**
Suspended Solids	240	8.0		mg/L	1	5/29/2013 4:14:00 PM	7617

Refer to the QC Summary report and sample login checklist for flagged QC data and preservation information.

Qualifiers:

*	Value exceeds Maximum Contaminant Level.	B	Analyte detected in the associated Method Blank
E	Value above quantitation range	H	Holding times for preparation or analysis exceeded
J	Analyte detected below quantitation limits	ND	Not Detected at the Reporting Limit
O	RSD is greater than RSDlimit	P	Sample pH greater than 2 for VOA and TOC only.
R	RPD outside accepted recovery limits	RL	Reporting Detection Limit

Analytical Report
Lab Order **1306540**
Date Reported: **6/24/2013**

Hall Environmental Analysis Laboratory, Inc.

CLIENT: Santa Fe County Utilities
Project: Quill WWTP
Lab ID: 1306540-001 **Matrix:** AQUEOUS

Client Sample ID: Influent
Collection Date: 6/13/2013 9:00:00 AM
Received Date: 6/13/2013 10:42:00 AM

Analyses	Result	RL	Qual	Units	DF	Date Analyzed	Batch
SM5210B: BOD						Analyst:	**ECH**
Biochemical Oxygen Demand	460	2.0		mg/L	1	6/18/2013 2:57:00 PM	7910
SM 4500 NORG C: TKN						Analyst:	**TMG**
Nitrogen, Kjeldahl, Total	30	2.0		mg/L	1	6/19/2013 9:10:00 AM	7944
SM 2540D: TSS						Analyst:	**KS**
Suspended Solids	340	8.0		mg/L	1	6/18/2013 3:18:00 PM	7978

Refer to the QC Summary report and sample login checklist for flagged QC data and preservation information.

Qualifiers:

*	Value exceeds Maximum Contaminant Level.	B	Analyte detected in the associated Method Blank
E	Value above quantitation range	H	Holding times for preparation or analysis exceeded
J	Analyte detected below quantitation limits	ND	Not Detected at the Reporting Limit
O	RSD is greater than RSDlimit	P	Sample pH greater than 2 for VOA and TOC only.
R	RPD outside accepted recovery limits	RL	Reporting Detection Limit

SUMMIT
ENVIRONMENTAL TECHNOLOGIES, INC.
Analytical Laboratories

August 02, 2013
Client: Santa Fe County Utilities
Address: PO Box 276
Santa Fe, NM 87504
Received: 7/25/2013
Project #: Monthly

Client ID#	Lab ID#	Collected	Analyte	Result	Units	Matrix	Method	DF	LOQ	Run	Analys
Influent	1312398-01	24-Jul-13	BOD	223	mg/L	L	SM 5210B	1	5	25-Jul-13	SML
Influent	1312398-01	24-Jul-13	TKN	30.5	mg/L	L	351.2	1	1	01-Aug-13	NBX
Influent	1312398-01	24-Jul-13	TSS	106.0	mg/L	L	SM2540 D	1	2	26-Jul-13	NBX
Contact Chamber	1312398-02	24-Jul-13	Nitrate-N	1.9216	mg/L	L	300.0	1	0.5	28-Jul-13	SG
Contact Chamber	1312398-02	24-Jul-13	TKN	12.5	mg/L	L	351.2	1	1	01-Aug-13	NBX
Irrigation Pond (Effluent)	1312398-03	24-Jul-13	BOD	34	mg/L	L	SM 5210B	1	5	25-Jul-13	SML
Irrigation Pond (Effluent)	1312398-03	24-Jul-13	FECAL COLIFORM	48.7MPN/100ml		L	ST MTH 9222D	1		24-Jul-13	JT
										Start: 7/24/2013@ 3:50 End: 7/25/2013 @11:04	
Irrigation Pond (Effluent)	1312398-03	24-Jul-13	Nitrate-N	ND	mg/L	L	300.0	1	0.5	28-Jul-13	SG
Irrigation Pond (Effluent)	1312398-03	24-Jul-13	TDS	354.0	mg/L	L	SM 2540-C	1	5	26-Jul-13	NBX
Irrigation Pond (Effluent)	1312398-03	24-Jul-13	TKN	14.7	mg/L	L	351.2	1	1	01-Aug-13	NBX

"Analytical Integrity" · EPA Certified · NELAP Certified
3310 Win Street · Cuyahoga Falls, Ohio 44223 • Phone: 330-253-8211 · Fax: 330-253-4489
Web Site: www.setlek.com

SUMMIT ENVIRONMENTAL TECHNOLOGIES, INC
Analytical Laboratories

Summit Environmental Technologies, Inc.
3310 Win St.
Cuyahoga Falls, Ohio 44223
TEL: (330) 253-8211 FAX: (330) 253-4489
Website: http://www.settek.com

WO#: **13080235**
Date Reported: **8/19/2013**
Company: Sangre de Christo Sciences
Address: 105 2nd St SE
Rio Rancho NM 87124
Received: 8/7/2013
Project#: Sante Fe County,

Client ID#	Lab ID#	Collected	Analyte	Result	Units	Qual	Matrix	Method	DF	LOD	LOQ	Run	Analyst
Influent	001	8/7/2013	Biochemical Oxygen Demand	170	mg/L		Non-Potable Water	SM 5210 B	1	5.0	5.0	8/9/2013 9:30:00 AM	SML
Influent	001	8/7/2013	TKN	27	mg/L		Non-Potable Water	EPA 351 2	1	0.50	1.0	8/19/2013	NBX
Influent	001	8/7/2013	TSS	370	mg/L		Non-Potable Water	SM 2540 D	1	1.0	2.0	8/9/2013	NBX

Client ID#	Lab ID#	Collected	Analyte	Result	Units	Qual	Matrix	Method	DF	LOD	LOQ	Run	Analyst
Contact Chamber	002	8/7/2013	Nitrate-N	ND	mg/L	J	Non-Potable Water	EPA 300.0	5	0.50	2.5	8/11/2013	SG
Contact Chamber	002	8/7/2013	TKN	10	mg/L		Non-Potable Water	EPA 351 2	1	0.50	1.0	8/19/2013	NBX

Client ID#	Lab ID#	Collected	Analyte	Result	Units	Qual	Matrix	Method	DF	LOD	LOQ	Run	Analyst
Irrigation Pond/Eff	003	8/7/2013	Fecal Coliform	1.0	CFU/100m		Non-Potable Water	SM 9222 D	1	1.0	1.0	8/7/2013	SUB
Irrigation Pond/Eff	003	8/7/2013	Nitrate-N	ND	mg/L	J	Non-Potable Water	EPA 300.0	5	0.50	2.5	8/11/2013 6:24:00 PM	SG
Irrigation Pond/Eff	003	8/7/2013	Biochemical Oxygen Demand	18	mg/L		Non-Potable Water	SM 5210 B	1	5.0	5.0	8/9/2013 9:30:00 AM	SML
Irrigation Pond/Eff	003	8/7/2013	TDS	490	mg/L		Non-Potable Water	SM 2540 C	1	2.0	5.0	8/8/2013	NBX
Irrigation Pond/Eff	003	8/7/2013	TKN	6.5	mg/L		Non-Potable Water	EPA 351 2	1	0.50	1.0	8/14/2013	NBX
Irrigation Pond/Eff	003	8/7/2013	TSS	150	mg/L		Non-Potable Water	SM 2540 D	1	1.0	2.0	8/9/2013	NBX

Summit Environmental Technologies, Inc.
3310 Win St.
Cuyahoga Falls, Ohio 44223
TEL: (330) 253-8211 FAX: (330) 253-4489
Website: http://www.settek.com

WO#: **13090089**
Date Reported: **9/19/2013**
Company: Sangre de Christo Sciences
Address: 105 2nd St SE
Rio Rancho NM 87124
Received: 9/4/2013
Project#:

Client ID#	Lab ID#	Collected	Analyte	Result	Units	Qual	Matrix	Method	DF	LOD	LOQ	Run	Analyst
Influent	001	9/4/2013	Biochemical Oxygen Demand	680	mg/L		Non-Potable Water	SM 5210 B	1	5.0	5.0	9/5/2013 10:00:00 AM	AYS
Influent	001	9/4/2013	TKN	50	mg/L		Non-Potable Water	EPA 351 2	1	0.50	1.0	9/17/2013	NBX
Influent	001	9/4/2013	Residue, Suspended	180	mg/L		Non-Potable Water	SM 2540 D	1	1.0	2.0	9/9/2013	NBX

Client ID#	Lab ID#	Collected	Analyte	Result	Units	Qual	Matrix	Method	DF	LOD	LOQ	Run	Analyst
Contact Chamber	002	9/4/2013	Nitrate-N	ND	mg/L	J	Non-Potable Water	EPA 300.0	5	0.50	2.5	9/9/2013	SG
Contact Chamber	002	9/4/2013	TKN	10	mg/L		Non-Potable Water	EPA 351 2	1	0.50	1.0	9/17/2013	NBX

Client ID#	Lab ID#	Collected	Analyte	Result	Units	Qual	Matrix	Method	DF	LOD	LOQ	Run	Analyst
Irrigation Pond	003	9/4/2013	Fecal Coliform	7.4	CFU/100ml		Non-Potable Water	SM 9222 D	1			9/4/2013	JT
Irrigation Pond	003	9/4/2013	Biochemical Oxygen Demand	37	mg/L		Non-Potable Water	SM 5210 B	1	5.0	5.0	9/5/2013 10:00:00 AM	AYS
Irrigation Pond	003	9/4/2013	TDS	430	mg/L		Non-Potable Water	SM 2540 C	1	2.0	5.0	9/9/2013	NBX

SUMMIT ENVIRONMENTAL TECHNOLOGIES, INC
Analytical Laboratories

Summit Environmental Technologies, Inc.
3310 Win St.
Cuyahoga Falls, Ohio 44223
TEL: (330) 253-8211 FAX: (330) 253-4489
Website: http://www.settek.com

WO#: **13100188**
Date Reported: **10/14/2013**
Company: Sangre de Christo Sciences
Address: 105 2nd St SE
Rio Rancho NM 87124
Received: 10/3/2013
Project#: Santa Fe County

Client ID#	Lab ID#	Collected	Analyte	Result	Units	Qual	Matrix	Method	DF	LOD	LOQ	Run	Analyst
Influent (sangro)	001	10/2/2013	Biochemical Oxygen Demand	400	mg/L		Non-Potable Water	SM 5210 B	1	5.0	5.0	10/4/2013 8:15:58 AM	AYS
Influent (sangro)	001	10/2/2013	TKN	35	mg/L		Non-Potable Water	EPA 351 2	1	0.50	1.0	10/7/2013	NBX
Influent (sangro)	001	10/2/2013	TSS	70	mg/L		Non-Potable Water	SM 2540 D	1	1.0	2.0	10/7/2013	NBX

Client ID#	Lab ID#	Collected	Analyte	Result	Units	Qual	Matrix	Method	DF	LOD	LOQ	Run	Analyst
Contact Chamber (Sangro)	002	10/2/2013	Nitrate-N	ND	mg/L	J	Non-Potable Water	EPA 300.0	5	0.50	2.5	10/5/2013	KRC
Contact Chamber (Sangro)	002	10/2/2013	TKN	9.0	mg/L		Non-Potable Water	EPA 351 2	1	0.50	1.0	10/7/2013	NBX

Client ID#	Lab ID#	Collected	Analyte	Result	Units	Qual	Matrix	Method	DF	LOD	LOQ	Run	Analyst
Irrigation Pond	003	10/2/2013	Fecal Coliform	30	CFU/100ml		Non-Potable Water	SM 9222 D	1			10/2/2013	JT
Irrigation Pond	003	10/2/2013	Nitrate-N	ND	mg/L	J	Non-Potable Water	EPA 300.0	5	0.50	2.5	10/5/2013 2:29:00 AM	KRC
Irrigation Pond	003	10/2/2013	Biochemical Oxygen Demand	41	mg/L		Non-Potable Water	SM 5210 B	1	5.0	5.0	10/4/2013 8:15:58 AM	AYS
Irrigation Pond	003	10/2/2013	TDS	330	mg/L		Non-Potable Water	SM 2540 C	1	2.0	5.0	10/4/2013	NBX
Irrigation Pond	003	10/2/2013	TKN	11	mg/L		Non-Potable Water	EPA 351 2	1	0.50	1.0	10/7/2013	NBX

Client Sample Results

Client: Sangre De Cristo Sciences, LLC
Project/Site: Santa Fe County Qtly Influent/Effluent

TestAmerica Job ID: 490-84550-1
SDG: Santa Fe County Quarterly Influent/Effluent 8/6/15

Client Sample ID: INFLUENT QUARTERLY

Lab Sample ID: 490-84550-2

Date Collected: 08/06/15 09:30
Date Received: 08/07/15 09:00

Matrix: Wastewater

General Chemistry

Analyte	Result	Qualifier	RL	MDL	Unit	D	Prepared	Analyzed	Dil Fac
Kjeldahl Nitrogen as N	43.0		2.50		mg/L		08/17/15 12:38	08/18/15 12:45	10
Total Suspended Solids	169		10.0		mg/L			08/11/15 16:30	1
Biochemical Oxygen Demand	35.3	*	20.0		mg/L			08/07/15 15:34	1

Analytical Report
Lab Order **1605760**
Date Reported: **6/1/2016**

Hall Environmental Analysis Laboratory, Inc.

CLIENT: Sangre De Cristo Sciences
Project: SFCU Quarterly Influent
Lab ID: 1605760-001 **Matrix:** AQUEOUS

Client Sample ID: SFCU Quarterly Influent
Collection Date: 5/17/2016 8:30:00 AM
Received Date: 5/17/2016 12:22:00 PM

Analyses	Result	PQL	Qual	Units	DF	Date Analyzed	Batch
SM5210B: BOD						Analyst:	**SMS**
Biochemical Oxygen Demand	280	2.0		mg/L	1	5/23/2016 1:39:00 PM	25374
SM 4500 NORG C: TKN						Analyst:	**CJS**
Nitrogen, Kjeldahl, Total	53	2.0	D	mg/L	1	5/27/2016 3:00:00 PM	25522
SM 2540D: TSS						Analyst:	**KS**
Suspended Solids	150	8.0	D	mg/L	1	5/22/2016 5:18:00 PM	25423

Refer to the QC Summary report and sample login checklist for flagged QC data and preservation information.

Qualifiers:

*	Value exceeds Maximum Contaminant Level.	B	Analyte detected in the associated Method Blank
D	Sample Diluted Due to Matrix	E	Value above quantitation range
H	Holding times for preparation or analysis exceeded	J	Analyte detected below quantitation limits
ND	Not Detected at the Reporting Limit	P	Sample pH Not In Range
R	RPD outside accepted recovery limits	RL	Reporting Detection Limit
S	% Recovery outside of range due to dilution or matrix	W	Sample container temperature is out of limit as specified

Hall Environmental Analysis Laboratory, Inc.

CLIENT: Sangre De Cristo Sciences
Project: SFCU Quarterly Influent
Lab ID: 1608131-001 **Matrix:** AQUEOUS

Client Sample ID: Quarterly Influent
Collection Date: 8/2/2016 8:45:00 AM
Received Date: 8/2/2016 2:45:00 PM

Analyses	Result	PQL	Qual	Units	DF	Date Analyzed	Batch
SM5210B: BOD						Analyst:	**SMS**
Biochemical Oxygen Demand	270	2.0		mg/L	1	8/8/2016 1:35:00 PM	26764
SM 4500 NORG C: TKN						Analyst:	**CJS**
Nitrogen, Kjeldahl, Total	43	5.0	D	mg/L	1	8/8/2016 3:24:00 PM	26801
SM 2540D: TSS						Analyst:	**KS**
Suspended Solids	140	8.0	D	mg/L	1	8/5/2016 2:53:00 PM	26791

Refer to the QC Summary report and sample login checklist for flagged QC data and preservation information.

Qualifiers:

*	Value exceeds Maximum Contaminant Level.	B	Analyte detected in the associated Method Blank
D	Sample Diluted Due to Matrix	E	Value above quantitation range
H	Holding times for preparation or analysis exceeded	J	Analyte detected below quantitation limits
ND	Not Detected at the Reporting Limit	P	Sample pH Not In Range
R	RPD outside accepted recovery limits	RL	Reporting Detection Limit
S	% Recovery outside of range due to dilution or matrix	W	Sample container temperature is out of limit as specified

NEW MEXICO
ENVIRONMENT DEPARTMENT

Ground Water Quality Bureau

SUSANA MARTINEZ
Governor

JOHN A. SANCHEZ
Lieutenant Governor

Harold Runnels Building
1190 St. Francis Drive
P.O. Box 5469, Santa Fe, NM 87502-5469
Phone (505) 827-2918 Fax (505) 827-2965
www.nmenv.state.nm.us

DAVE MARTIN
Secretary

BUTCH TONGATE
Deputy Secretary

CERTIFIED MAIL – RETURN RECEIPT REQUESTED

August 15, 2012

Charles Gara, Division Director
State of New Mexico General Services Department
Property Control Division
1100 St. Francis Drive, Room 2022
Santa Fe, New Mexico 87501

RE: Discharge Permit Renewal, DP-234, Quill Wastewater Treatment Facility (formerly the State of New Mexico Penitentiary WWTF)

Dear Mr. Gara:

The New Mexico Environment Department (NMED) issues the enclosed Discharge Permit Renewal, DP-234, to the State of New Mexico, General Services Department-Property Control Division (permittee) pursuant to the New Mexico Water Quality Act (WQA), NMSA 1978 §§74-6-1 through 74-6-17, and the New Mexico Water Quality Control Commission (WQCC) Regulations, 20.6.2 NMAC.

The Discharge Permit contains terms and conditions that shall be complied with by the permittee and are enforceable by NMED pursuant to Section 20.6.2.3104 NMAC, WQA, NMSA 1978 §74-6-5 and §74-6-10. Please be aware that this Discharge Permit may contain conditions that require the permittee to implement operational, monitoring or closure actions by a specified deadline. Such conditions are listed at the beginning of the operational, monitoring and closure plans of this Discharge Permit.

Issuance of this Discharge Permit does not relieve the permittee of the responsibility to comply with the WQA, WQCC Regulations, and any other applicable federal, state and/or local laws and regulations, such as zoning requirements and nuisance ordinances.

Pursuant to Paragraph (4) of Subsection H of 20.6.2.3109 NMAC, the term of the Discharge Permit shall be five years from the effective date. The term of this Discharge Permit will end on August 15, 2017.

NMED requests that the permittee submit an application for renewal (or renewal and modification) at least 180 days prior to the date the Discharge Permit term ends.

An invoice for the Discharge Permit Fee of $4,600 is being sent under separate cover. Payment of the Discharge Permit Fee must be received by NMED within 30 days of the date the Discharge Permit is issued.

If you have any questions, please contact Steve Pedro at (505) 827-2957. Thank you for your cooperation during this Discharge Permit review.

Sincerely,

For Jerry Schoeppner, Chief
Ground Water Quality Bureau

JS:SP

Encs: Discharge Permit Renewal, DP-234
Ground Water Discharge Permit Monitoring Well Construction and Abandonment Conditions, Revision 1.1, March 2011
Land Application Data Sheet (LADS; also available at the following website: http://www.nmenv.state.nm.us/gwb/forms/NewMexicoEnvironmentDepartment-GroundWaterQualityBureau-Forms.htm)
Fertilizer Log

cc: Robert Italiano, District Manager, NMED District II (permit – electronic copy)
NMED Santa Fe Field Office (permit)
John Romero, Office of the State Engineer (permit – electronic copy)
Patricio Guerrerortiz, Utilities Division Director, Santa Fe County, P.O. Box 276, Santa Fe, New Mexico 87504 (permit)
Karen Torres, Hydrogeologist, Santa Fe County, P.O. Box 276, Santa Fe, New Mexico 87504 (permit/enclosures)
Robert Gutierrez, Wastewater Operator, Santa Fe County, P.O. Box 276, Santa Fe, New Mexico 87504 (permit)
Thomas Gurule, Chief, State of New Mexico General Services Department-Leasing and Property Management Bureau, 1100 St. Francis Drive, Santa Fe, New Mexico 87501
Michael Rodriguez, Project Manager, State of New Mexico General Services Department-Property Control Division, 1100 St. Francis Drive, Santa Fe, New Mexico 87501 (permit)

Donna Martinez, Penitentiary of New Mexico, P.O. Box 1059, Santa Fe, New Mexico 87504 (permit)

Stanley Moya, Penitentiary of New Mexico, P.O. Box 1059, Santa Fe, New Mexico 87504 (permit)

Hanna Branning, US Environmental Protection Agency Region 6, Compliance Assurance and Enforcement Division, 1445 Ross Ave, Suite 1200, Dallas, Texas 75202-2733 (permit)

Appendix C.

Quill WWTF NMED Permit

This page intentionally left blank.

GROUND WATER DISCHARGE PERMIT RENEWAL
Quill Wastewater Treatment Facility, DP-234

I. INTRODUCTION

The New Mexico Environment Department (NMED) issues this Discharge Permit Renewal (Discharge Permit), DP-234, to the State of New Mexico General Services Department-Property Control Division (permittee) pursuant to the New Mexico Water Quality Act (WQA), NMSA 1978 §§74-6-1 through 74-6-17, and the New Mexico Water Quality Control Commission (WQCC) Regulations, 20.6.2 NMAC.

NMED's purpose in issuing this Discharge Permit, and in imposing the requirements and conditions specified herein, is to control the discharge of water contaminants from the Quill Wastewater Treatment Facility (facility) into ground and surface water, so as to protect ground and surface water for present and potential future use as domestic and agricultural water supply and other uses and protect public health. In issuing this Discharge Permit, NMED has determined that the requirements of Subsection C of 20.6.2.3109 NMAC have been or will be met. Pursuant to Section 20.6.2.3104 NMAC, it is the responsibility of the permittee to comply with the terms and conditions of this Discharge Permit; failure may result in an enforcement action(s) by NMED (20.6.2.1220 NMAC).

The activities which produce the discharge, the location of the discharge, and the quantity, quality and flow characteristics of the discharge are briefly described as follows:

Up to 280,000 gallons per day (gpd) of domestic wastewater is received at the Quill wastewater treatment facility (WWTF). Domestic wastewater is treated in two synthetically lined aerated impoundments followed by two synthetically lined stabilization impoundments. Wastewater is disinfected, stored in a clay lined impoundment and discharged to a 95 acre land application area for irrigation.

The discharge contains water contaminants which may be elevated above the standards of Section 20.6.2.3103 NMAC and/or the presence of toxic pollutants as defined in Subsection WW of 20.6.2.7 NMAC.

The facility is located at 4311 NM Hwy 14, approximately five miles south of Santa Fe, in Section 35, Township 16 North, Range 08 East, Santa Fe County. Ground water most likely to be affected is at a depth of approximately 90 feet and has a total dissolved solids concentration of approximately 170 milligrams per liter.

The original Discharge Permit was issued on June 28, 1983 and subsequently renewed on July 5, 1988, June 27, 1994, modified on October 15, 1998, and renewed and modified on June 12, 2000 and November 20, 2006. The application (i.e., discharge plan) consists of the materials submitted by Charles Gara dated May 27, 2011, an amended application submitted by Karen Torres, Santa Fe County, on behalf of the State of New Mexico General Services Department-Property Control Division on July 18, 2011, and materials contained in the administrative record prior to issuance of this Discharge Permit. The discharge shall be managed in accordance with all conditions and requirements of this Discharge Permit.

Pursuant to Section 20.6.2.3109 NMAC, NMED reserves the right to require a Discharge Permit Modification in the event NMED determines that the requirements of 20.6.2 NMAC are being or may be violated or the standards of Section 20.6.2.3103 NMAC are being or may be violated. This may include a determination that structural controls and/or management practices approved under this Discharge Permit are not protective of ground water quality, and that more stringent requirements to protect ground water quality may be required by NMED. The permittee may be required to implement abatement of water pollution and remediate ground water quality.

Issuance of this Discharge Permit does not relieve the permittee of the responsibility to comply with the WQA, WQCC Regulations, and any other applicable federal, state and/or local laws and regulations, such as zoning requirements and nuisance ordinances.

The following acronyms and abbreviations may be used in this Discharge Permit:

Abbreviation	Explanation		Abbreviation	Explanation
BOD_5	biochemical oxygen demand (5-day)		NTU	nephelometric turbidity units
CFR	Code of Federal Regulations		Org	organisms
Cl	chloride		TDS	total dissolved solids
EPA	United States Environmental Protection Agency		TKN	total Kjeldahl nitrogen
gpd	gallons per day		total nitrogen	= TKN + NO_3-N
LADS	land application data sheet(s)		TRC	Total Residual Chlorine
mg/L	milligrams per liter		TSS	total suspended solids
mL	milliliters		UPC	Uniform Plumbing Code
NMAC	New Mexico Administrative Code		WQA	New Mexico Water Quality Act
NMED	New Mexico Environment Department		WQCC	Water Quality Control Commission
NMSA	New Mexico Statutes Annotated		WWTF	Wastewater Treatment Facility
NO_3-N	nitrate-nitrogen			

II. FINDINGS

In issuing this Discharge Permit, NMED finds:

1. The permittee is discharging effluent or leachate from the facility so that such effluent or leachate may move directly or indirectly into ground water within the meaning of Section 20.6.2.3104 NMAC.

2. The permittee is discharging effluent or leachate from the facility so that such effluent or leachate may move into ground water of the State of New Mexico which has an existing concentration of 10,000 mg/L or less of TDS within the meaning of Subsection A of 20.6.2.3101 NMAC.

3. The discharge from the facility is not subject to any of the exemptions of Section 20.6.2.3105 NMAC.

III. AUTHORIZATION TO DISCHARGE

Pursuant to 20.6.2.3104 NMAC, it is the responsibility of the permittee to ensure that discharges authorized by this Discharge Permit are consistent with the terms and conditions herein.

The permittee is authorized to receive and treat up to 280,000 gpd of domestic wastewater at the Quill WWTF. Wastewater passes through a mechanical bar screen and flows to two primary aerated synthetically lined impoundments which may be operated in series or parallel. Wastewater overflows to two synthetically lined stabilization impoundments for polishing, which also may be operated in series or parallel and is pumped to a chlorine contact chamber for disinfection. Treated wastewater (reclaimed wastewater) is stored in a clay-lined storage impoundment prior to being discharged to a 95 acre land application area (i.e., re-use area; designated as South-38 acres and North-57 acres) by spray irrigation. [20.6.2.3104 NMAC, Subsection C of 20.6.2.3106 NMAC, Subsection C of 20.6.2.3109 NMAC]

IV. CONDITIONS

NMED issues this Discharge Permit for the discharge of water contaminants subject to the following conditions:

A. OPERATIONAL PLAN

#	Terms and Conditions
1.	The permittee shall implement the following operational plan to ensure compliance with Title 20, Chapter 6, Parts 1 and 2 NMAC. [Subsection C of 20.6.2.3109 NMAC]
2.	The permittee shall operate in a manner such that standards and requirements of Sections 20.6.2.3101 and 20.6.2.3103 NMAC are not violated. [20.6.2.3101 NMAC, 20.6.2.3103 NMAC, Subsection C of 20.6.2.3109 NMAC]

Operational Actions with Implementation Deadlines

#	Terms and Conditions
3.	Within 12 months following the effective date of this Discharge Permit (**by August 15, 2013**), the permittee shall replace the synthetic liner in the west primary impoundment. A minimum of 90 days prior to replacing the synthetic liner in the west primary impoundment and other impoundment liner(s) which may be replaced during the term of

#	**Terms and Conditions**
	this Discharge Permit, the permittee shall submit preliminary construction plans and specifications to NMED for review. Prior to replacing the synthetic liner(s), the permittee shall submit final construction plans and specifications to NMED for review. The construction plans and specifications shall bear the seal and signature of a licensed New Mexico professional engineer (pursuant to New Mexico Engineering and Surveying Practice Act and the rules promulgated under that authority) and supporting design calculations, and shall be submitted for review by NMED. The submitted documentation shall include the following elements: a) A plan for the removal and disposal of accumulated sludge within the impoundment. The plan shall comply with all local, state and federal regulations, including 40 CFR Part 503. *Note: A proposal that includes the surface disposal of sludge may be subject to Ground Water Discharge Permitting requirements pursuant to 20.6.2.3104 NMAC that are separate from the requirements of this Discharge Permit.* b) Details for the replacement and installation of synthetic liner(s) in the impoundment(s) system and a liner consistent with the attachment titled *Ground Water Discharge Permit Conditions for Synthetically Lined Lagoons – Liner Material and Site Preparation*, Revision 0.0, May 2007. c) Specifications for all equipment, materials and installation procedures to be used in the construction of the liner. Prior to replacing the synthetic liner(s) and its associated components, the permittee shall obtain written verification from NMED that the final plans and specifications meet the requirements of this Discharge Permit. [Subsections A and C 20.6.2.1202 NMAC, Subsection C of 20.6.2.3106 NMAC, Subsection C of 20.6.2.3107 NMAC, NMSA 1978, §§ 61-23-1 through 61-23-32]
4.	Prior to discharging wastewater to any impoundment which has undergone a synthetic liner installation(s), the permittee shall complete construction in accordance with the final construction plans and specifications required by this Discharge Permit. The permittee shall notify NMED at least five working days prior to commencement of construction to allow NMED personnel to be onsite for inspection. The permittee shall submit record drawings that bear the seal and signature of a licensed New Mexico professional engineer (pursuant to the New Mexico Engineering and Surveying Practice Act and the rules promulgated under that authority) for the constructed impoundment(s) to NMED within 30 days of completion. [Subsections A and C 20.6.2.1202 NMAC, Subsection C of 20.6.2.3109 NMAC, NMSA 1978, §§ 61-23-1 through 61-23-32]
5.	Within 30 days following the effective date of this Discharge Permit (**by September 14, 2012**), the permittee shall post signs in English and Spanish at the east entrance (corral area) to the re-use area and at other locations where public exposure to reclaimed wastewater may occur. The signs shall state:

#	Terms and Conditions
	NOTICE: **THIS AREA IS IRRIGATED WITH RECLAIMED WASTEWATER - DO NOT DRINK.** **AVISO:** **ESTA ÁREA ESTÁ REGADA CON AGUAS NEGRAS RECOBRADAS - NO TOMAR.** Alternate wording and/or graphics may be submitted to NMED for approval. [Subsections B and C of 20.6.2.3109 NMAC, NMSA 1978, § 74-6-5.D]
6.	Within 180 days following the effective date of this Discharge Permit (**by February 11, 2013**), the permittee shall measure the thickness of the settled solids in all treatment impoundments and report the results of the solids depth measurements to NMED. The permittee shall measure the thickness of settled solids in accordance with the following procedure. a) The total surface area of the treatment impoundment shall be divided into nine equal sub-areas. b) A settled solids measurement device (core sampler) shall be utilized to obtain one settled solids thickness measurement (to the nearest half-foot) per sub-area. c) The nine settled solids measurements shall be averaged. In the event the average solids accumulation exceeds one-third of the maximum liquid depth in the impoundment(s), the permittee shall propose a plan for the removal and disposal of the solids from the treatment impoundment(s). The solids removal and disposal plan shall be submitted to NMED for approval within 120 days following the effective date of this Discharge Permit (**by December 13, 2012**), and shall include the following: a) A method for removal of the solids to a depth of less than six inches throughout the treatment impoundment in a manner that is protective of the impoundment liner. b) A description of how the solids will be contained, transported, and disposed of in accordance with all local, state, and federal regulations, including 40 CFR Part 503. c) A schedule for completion of the solids removal and disposal project. The permittee shall initiate implementation of the plan following approval by NMED. [Subsection A of 20.6.2.3107 NMAC, Subsection C of 20.6.2.3109 NMAC]

Operating Conditions

<table>
<tr><th>#</th><th>Terms and Conditions</th></tr>
<tr><td>7.</td><td>Reclaimed wastewater discharged from the clay-lined storage impoundment shall not exceed the following limitation:

Total Nitrogen: 20 mg/L

[Subsection C of 20.6.2.3109 NMAC]</td></tr>
<tr><td>8.</td><td>Reclaimed wastewater discharged from the clay-lined storage impoundment shall not exceed the following limitations:
<table>
<tr><th>Test</th><th>30-day geometric mean</th><th>30-day average</th><th>maximum</th></tr>
<tr><td>Total Nitrogen (TKN + NO_3-N)</td><td>N/A</td><td>N/A</td><td>20 mg/L</td></tr>
<tr><td>Fecal coliform bacteria:</td><td>200 Org/100 mL</td><td>N/A</td><td>400 Org/100 mL</td></tr>
<tr><td>BOD_5:</td><td>N/A</td><td>30 mg/L</td><td>45 mg/L</td></tr>
<tr><td>TSS:</td><td>N/A</td><td>30 mg/L</td><td>45 mg/L</td></tr>
<tr><td>TRC:</td><td>N/A</td><td>Monitor Only</td><td>Monitor Only</td></tr>
</table>
[Subsections B and C of 20.6.2.3109 NMAC, NMSA 1978, § 74-6-5.D]</td></tr>
<tr><td>9.</td><td>The permittee shall apply reclaimed wastewater to the re-use area such that the amount of total nitrogen applied does not exceed 200 pounds per acre in any 12-month period. Nitrogen content shall not be adjusted to account for volatilization or mineralization processes. Wastewater shall be distributed evenly throughout the entire re-use area. Excessive ponding shall be prevented.

[Subsection C of 20.6.2.3109 NMAC]</td></tr>
<tr><td>10.</td><td>The permittee shall meet the following general requirements for above-ground use of reclaimed domestic wastewater:
a) The permittee shall maintain signs in English and Spanish at all re-use areas such that they are visible and legible for the term of this Discharge Permit. The signs shall be posted at the entrance to re-use areas and at other locations where public exposure to reclaimed wastewater may occur. The signs shall state: NOTICE: THIS AREA IS IRRIGATED WITH RECLAIMED WASTEWATER - DO NOT DRINK. AVISO: ESTA ÁREA ESTÁ REGADA CON AGUAS NEGRAS RECOBRADAS - NO TOMAR. Alternate wording and/or graphics may be submitted to NMED for approval.
b) The reclaimed wastewater systems shall have no direct or indirect cross connections with public water systems or irrigation wells pursuant to the latest revision of the</td></tr>
</table>

#	**Terms and Conditions**
	New Mexico Plumbing Code (14.8.2 NMAC) and New Mexico Mechanical Code (14.9.2 NAMC). c) Above-ground use of reclaimed wastewater shall not result in excessive ponding of wastewater, and shall not exceed the water consumptive needs of the crop. Re-use shall not be conducted at times when the re-use area is saturated or frozen. d) The discharge of reclaimed wastewater shall be confined to the re-use area. e) The discharge of reclaimed domestic wastewater to crops for human consumption is prohibited. f) Water supply wells within 200 feet of a re-use area shall have adequate wellhead construction pursuant to 19.27.4 NMAC. Re-use shall be managed to ensure protection of ground water quality. g) Existing and accessible portions of the reclaimed wastewater distribution system (with the exception of application equipment such as sprinklers or pivots) shall be colored purple or clearly labeled as being part of a reclaimed wastewater distribution system. Piping, valves and outlets that are installed during the term of this Discharge Permit shall be colored purple pursuant to the latest revision of the New Mexico Plumbing Code (14.8.2 NMAC) and New Mexico Mechanical Code (14.9.2 NAMC) to differentiate piping or fixtures used to convey reclaimed wastewater from those intended for potable or other uses. Valves, outlets, and sprinkler heads used in reclaimed wastewater systems shall be accessible only to authorized personnel. [Subsections B and C of 20.6.2.3109 NMAC, NMSA 1978, § 74-6-5.D]
11.	The permittee shall meet the following setbacks, access restrictions and equipment requirements for spray irrigation using Class 2 reclaimed domestic wastewater: a) A minimum 100-foot setback shall be maintained between any dwellings or occupied establishments and the edge of the re-use area. b) Irrigation using reclaimed wastewater shall be postponed at times when windy conditions may result in drift of reclaimed wastewater outside the re-use area. c) Access to the re-use area shall be restricted by perimeter fencing using four-strand barbed wire and a locking gate, or other access controls approved by NMED. d) Public access shall be prohibited during times when reclaimed wastewater is being applied to the re-use area. e) The spray irrigation system shall be limited to low trajectory spray nozzles. [Subsections B and C of 20.6.2.3109 NMAC, NMSA 1978, § 74-6-5.D]
12.	In the event that a cross-connection with fresh water exists, the permittee shall institute a backflow prevention method to protect wells and public water supply systems from contamination by reclaimed wastewater prior to discharging to the re-use area. Backflow prevention shall be achieved by a total disconnect (physical air gap separation between the discharge pipe and the liquid surface at least twice the diameter of the discharge pipe), or by a reduced pressure principal backflow prevention assembly (RP) installed on the line between the fresh water supply wells or public water supply and the

#	**Terms and Conditions**
	reclaimed wastewater delivery system. Backflow prevention shall be maintained at all times. RP devices shall be inspected and tested by a certified backflow prevention assembly tester at the time of installation, repair or relocation and at least on an annual basis thereafter. The backflow prevention assembly tester shall have successfully completed a 40-hour backflow prevention course based on the University of Southern California's Backflow Prevention Standards and Test Procedures, and obtained certification demonstrating completion. A malfunctioning RP device shall be repaired or replaced within 30 days of discovery, and use of all supply lines associated with the RP device shall cease until repair or replacement has been completed. Copies of the inspection and maintenance records and test results for each RP device associated with the backflow prevention program shall be maintained at a location available for inspection by NMED. [Subsection C of 20.6.2.3109 NMAC]
13.	The permittee shall maintain 18 to 24-inch berms around the re-use area to prevent surface water run-on and run-off. The berms shall be inspected on a regular basis and after any major precipitation event, and repaired as necessary. [Subsection C of 20.6.2.3109 NMAC]
14.	The permittee shall maintain fences around the WWTF to control access by the general public and animals. The fences shall consist of a minimum of six-foot chain link or field fencing and locking gates. Fences shall be maintained throughout the term of this Discharge Permit. [Subsections B and C of 20.6.2.3109 NMAC, NMSA 1978, § 74-6-5.D]
15.	The permittee shall maintain signs indicating that the wastewater at the facility is not potable. Signs shall be posted at the facility entrance and other areas where there is potential for public contact with wastewater. All signs shall be printed in English and Spanish remain visible and legible for the term of this Discharge Permit. [Subsections B and C of 20.6.2.3109 NMAC, NMSA 1978, § 74-6-5.D]
16.	The permittee shall maintain the impoundment liner(s) in such a manner as to avoid conditions which could affect the structural integrity of the impoundment(s) and/or impoundment liner(s). Such conditions include or may be characterized by the following: • erosion damage; • animal burrows or other damage; • the presence of vegetation including aquatic plants, weeds, woody shrubs or trees growing within five feet of the top inside edge of a sub-grade impoundment, within five feet of the toe of the outside berm of an above-grade impoundment, or within the

#	Terms and Conditions
	impoundment itself; • the presence of large debris or large quantities of debris in the impoundment; • evidence of seepage; and • evidence of berm subsidence. Vegetation growing around the impoundment shall be routinely controlled by mechanical removal in a manner that is protective of the impoundment liner. The permittee shall visually inspect the impoundment(s) and surrounding berms on a monthly basis to ensure proper maintenance. In the event that inspection reveals any evidence of damage that threatens the structural integrity of an impoundment berm or liner, or that may result in an unauthorized discharge, the permittee shall enact the contingency plan set forth in this Discharge Permit. [Subsection A of 20.6.2.3107 NMAC, Subsection C of 20.6.2.3109 NMAC]
17.	The permittee shall preserve a minimum of two feet of freeboard between the liquid level in the impoundment(s) and the elevation of the top of the impoundment liner. In the event that the permittee determines that two feet of freeboard cannot be preserved in the impoundment, the permittee shall enact the contingency plan set forth in this Discharge Permit. [Subsection A of 20.6.2.3107 NMAC, Subsection C of 20.6.2.3109 NMAC]
18.	The permittee shall inspect the Valle Vista Subdivision lift station on a weekly basis (at a minimum), and clean as needed to prevent pump failure. The permittee shall maintain a record of lift station inspections, repairs and cleanings. [Subsection A of 20.6.2.3107 NMAC, Subsection C of 20.6.2.3109 NMAC]
19.	The permittee shall utilize operators, certified by the State of New Mexico at the appropriate level, to operate the wastewater collection, treatment and disposal systems. The operations and maintenance of all or any part of the wastewater system shall be performed by, or under the direct supervision of, a certified operator. [Subsection C of 20.6.2.3109 NMAC, 20.7.4 NMAC]

B. MONITORING AND REPORTING

#	Terms and Conditions
20.	The permittee shall conduct the following monitoring, reporting, and other requirements listed below in accordance with the monitoring requirements of this Discharge Permit.

#	**Terms and Conditions**
	[Subsection A of 20.6.2.3107 NMAC, Subsection C of 20.6.2.3109 NMAC]
21.	METHODOLOGY – Unless otherwise approved in writing by NMED, the permittee shall conduct sampling and analysis in accordance with the most recent edition of the following documents: a) American Public Health Association, Standard Methods for the Examination of Water and Wastewater (18th, 19th or current) b) U.S. Environmental Protection Agency, Methods for Chemical Analysis of Water and Waste c) U.S. Geological Survey, Techniques for Water Resources Investigations of the U.S. Geological Survey d) American Society for Testing and Materials, Annual Book of ASTM Standards, Part 31. Water e) U.S. Geological Survey, et al., National Handbook of Recommended Methods for Water Data Acquisition f) Federal Register, latest methods published for monitoring pursuant to Resource Conservation and Recovery Act regulations g) Methods of Soil Analysis: Part 1. Physical and Mineralogical Methods; Part 2. Microbiological and Biochemical Properties; Part 3. Chemical Methods, American Society of Agronomy [Subsection B of 20.6.2.3107 NMAC]
22.	The permittee shall submit quarterly monitoring reports to NMED for the most recently completed quarterly period by the 1st of February, May, August and November each year. Quarterly monitoring shall be performed during the following periods and submitted as follows: • January 1st through March 31st (first quarter) – **due by May 1st** • April 1st through June 30th (second quarter) – **due by August 1st** • July 1st through September 30th (third quarter) – **due by November 1st** • October 1st through December 31st (fourth quarter) – **due by February 1st** [Subsection A of 20.6.2.3107 NMAC]

Monitoring Actions with Implementation Deadlines

#	**Terms and Conditions**
23.	Within 90 days of the effective date of this Discharge Permit (**by November 13, 2012**), the permittee shall install the following new monitoring well. • One monitoring well (MW-4) to be located 20 to 50 feet hydrologically downgradient of the north re-use area's irrigated boundary.

#	**Terms and Conditions**
	The well shall be completed in accordance with the attachment titled *Ground Water Discharge Permit Monitoring Well Construction and Abandonment Conditions*, Revision 1.1, March 2011. Construction and lithologic logs shall be submitted to NMED within 30 days of well completion. Unless otherwise noted in this Discharge Permit, the requirement to install a monitoring well downgradient of a source is <u>not</u> contingent upon construction of or discharge of wastewater to that source, or discharge of wastewater from the facility. [Subsection A of 20.6.2.3107 NMAC]
24.	Following installation of the monitoring well required to be installed by this Discharge Permit, the permittee shall sample ground water in the well and analyze the samples for dissolved TKN, NO_3-N, TDS and Cl. Ground water sample collection, preservation, transport and analysis shall be performed according to the following procedure: a) Measure the depth-to-most-shallow ground water from the top of the well casing to the nearest hundredth of a foot. b) Purge three well volumes of water from the well prior to sample collection. c) Obtain samples from the well for analysis. d) Properly prepare, preserve and transport samples. e) Analyze samples in accordance with the methods authorized in this Discharge Permit. Depth-to-most-shallow ground water measurements, analytical results, including the laboratory QA/QC summary report, and a facility layout map showing the location and number of the well shall be submitted to NMED within 45 days of the installation of the monitoring well. [Subsection A of 20.6.2.3107 NMAC]
25.	Within 150 days following the effective date of this Discharge Permit (**by January 12, 2013**), the permittee shall survey all wells approved by NMED for Discharge Permit monitoring purposes to a U.S. Geological Survey (USGS) or other permanent benchmark. Survey data shall include northing, easting and elevation to the nearest hundredth of a foot or shall be in accordance with the "Minimum Standards for Surveying in New Mexico" (12.8.2 NMAC). A survey elevation shall be established at the top-of-casing, with a permanent marking indicating the point of survey. The survey shall bear the seal and signature of a licensed New Mexico professional surveyor (pursuant to the New Mexico Engineering and Surveying Practice Act and the rules promulgated under that authority). Depth-to-most-shallow ground water shall be measured to the nearest hundredth of a foot in all surveyed wells, and the data shall be used to develop a ground water elevation

#	Terms and Conditions
	contour map showing the location of all monitoring wells and the direction and gradient of ground water flow at the facility. The data and ground water elevation contour map shall be submitted to NMED within 30 days of survey completion. [Subsection A of 20.6.2.3107 NMAC, NMSA 1978, §§ 61-23-1 through 61-23-32]
26.	Once prior to the date that the term of this Discharge Permit ends, NMED shall have the option to perform downhole inspections of all monitoring wells identified in this Discharge Permit. NMED shall establish the inspection date and provide at least 60 days notice to the permittee by certified mail. The permittee shall have any existing dedicated pumps removed at least 48 hours prior to NMED inspection to allow adequate settling time of sediment agitated from pump removal. Should a facility not have existing dedicated pumps, but decide to install pumps in any of the monitoring wells, NMED shall be notified at least 90 days prior to pump installation so that a downhole well inspection(s) can be scheduled prior to pump placement. [Subsections A and D of 20.6.2.3107 NMAC]

Ground Water Monitoring Conditions

#	Terms and Conditions
27.	The permittee shall perform quarterly ground water sampling in the following monitoring wells and analyze the samples for dissolved TKN, NO_3-N, TDS and Cl: • MW-1, intended to be located hydrologically upgradient and 50 feet northeast of stabilization impoundment #2. • MW-2, intended to be located hydrologically downgradient and 50 feet northwest of stabilization impoundment #1. • MW-3, intended to be located hydrologically downgradient and 40 feet west of stabilization impoundment #1. • MW-4, intended to be located hydrologically downgradient and within 20-50 feet west of the north re-use area's irrigated boundary. Ground water sample collection, preservation, transport and analysis shall be performed according to the following procedure: a) Measure the depth-to-most-shallow ground water from the top of the well casing to the nearest hundredth of a foot. b) Purge three well volumes of water from the well prior to sample collection. c) Obtain samples from the well for analysis. d) Properly prepare, preserve and transport samples. e) Analyze samples in accordance with the methods authorized in this Discharge Permit.

#	Terms and Conditions
	Depth-to-most-shallow ground water measurements, analytical results, including the laboratory QA/QC summary report, and a facility layout map showing the location and number of each well shall be submitted to NMED in the quarterly monitoring reportseach year. [Subsection A of 20.6.2.3107 NMAC]

Facility Monitoring Conditions

#	Terms and Conditions
28.	The permittee shall measure the totalized, average daily and peak daily volume of wastewater discharged to the treatment facility each month using a primary measuring device (equipped with head sensing, totalizing and chart recording/data logging mechanisms) located at the WWTF entrance works. The totalized, average daily and peak daily discharge volumes for each month shall be submitted to NMED in the quarterly monitoring reports. [Subsection A of 20.6.2.3107 NMAC, Subsections C and H of 20.6.2.3109 NMAC]
29.	The permittee shall measure the monthly volume of reclaimed wastewater discharged from the clay-lined storage impoundment to the re-use area. The permittee shall obtain readings from a totalizing flow meter located on pump transfer line on a monthly basis and calculate the monthly and average daily discharge volume. The monthly volume discharged shall be used on the LADS to calculate nitrogen loading. The monthly meter readings, and calculated monthly and average daily discharge volumes shall be submitted to NMED in the quarterly monitoring reports each year. [Subsection A of 20.6.2.3107 NMAC, Subsections C and H 20.6.2.3109 NMAC]
30.	All flow meters shall be capable of having their accuracy ascertained under actual working (field) conditions. A field calibration method shall be developed for each flow meter and that method shall be used to check the accuracy of each respective meter. Field calibrations shall be performed upon repair or replacement of a flow measurement device and, at a minimum, on an annual basis. Flow meters shall be calibrated to within plus or minus 10 percent of actual flow, as measured under field conditions. Field calibrations shall be performed by an individual knowledgeable in flow measurement and in the installation/operation of the particular device in use. A flow meter calibration report shall be prepared for each flow measurement device at the frequency calibration is required. The flow meter calibration report shall include the following information: a) The location and meter identification.

#	**Terms and Conditions**
	b) The method of flow meter field calibration employed. c) The measured accuracy of each flow meter prior to adjustment indicating the positive or negative offset as a percentage of actual flow as determined by an in-field calibration check. d) The measured accuracy of each flow meter following adjustment, if necessary, indicating the positive or negative offset as a percentage of actual flow of the meter. e) Any flow meter repairs made during the previous year or during field calibration. The permittee shall maintain records of flow meter calibration(s) at a location accessible for review by NMED during facility inspections. [Subsection A of 20.6.2.3107 NMAC, Subsections C and H 20.6.2.3109 NMAC]
31.	The permittee shall visually inspect flow meters on a monthly basis for evidence of malfunction. If a visual inspection indicates a flow meter is not functioning as required by this Discharge Permit, the permittee shall repair or replace the meter within 30 days of discovery. For *repaired* meters, the permittee shall submit a report to NMED with the next monitoring report following the repair that includes a description of the malfunction; a statement verifying the repair; and a flow meter field calibration report completed in accordance with the requirements of this Discharge Permit. For *replacement* meters, the permittee shall submit a report to NMED with the next monitoring report following the replacement that includes a design schematic for the device and a flow meter field calibration report completed in accordance with the requirements of this Discharge Permit. [Subsection A of 20.6.2.3107 NMAC, Subsection C of 20.6.2.3109 NMAC]
32.	The permittee shall collect samples of reclaimed wastewater from the outlet of the clay-lined storage impoundment on a quarterly basis and analyze the samples for TKN, NO_3-N, TDS and Cl. In the event that discharge does not occur for an entire quarterly period, the permittee shall collect a composite wastewater sample from a representative location within the clay-lined storage impoundment and analyze the sample for TKN, NO_3-N, TDS and Cl. The composite sample shall consist of a minimum of six equal aliquots collected around the entire perimeter of the impoundment and thoroughly mixed. Samples shall be properly prepared, preserved, transported and analyzed in accordance with the methods authorized in this Discharge Permit. Analytical results shall be submitted to NMED in the quarterly monitoring reports. [Subsection A of 20.6.2.3107 NMAC, Subsections C and H of 20.6.2.3109 NMAC]

#	**Terms and Conditions**
33.	During any month that the discharge of reclaimed wastewater occurs, the permittee shall perform the following analyses on reclaimed wastewater samples collected from the outlet of the clay-lined storage impoundment using the following sampling method and frequency: • Fecal coliform bacteria: grab sample once per month. • BOD_5: grab sample once per month. • TSS: grab sample once per month. • TRC concentrations: record whenever fecal coliform samples are collected. Samples shall be properly prepared, preserved, transported and analyzed in accordance with the methods authorized in this Discharge Permit. Analytical results and a copy of the log of TRC concentrations shall be submitted to NMED in the quarterly monitoring reports. [Subsection A of 20.6.2.3107 NMAC, Subsections B, C and H of 20.6.2.3109 NMAC, NMSA 1978, § 74-6-5.D]
34.	On an annual basis, the permittee shall collect a grab sample of reclaimed wastewater from the outlet of the clay-lined storage impoundment and analyze the sample for the following inorganic constituents: • aluminum • arsenic • barium • boron • cadmium • chromium • cobalt • copper • cyanide • fluoride • iron • lead • manganese • molybdenum • mercury • pH (instantaneous) • nickel • radioactivity: combined radium-226 & radium-228 • selenium • silver • sulfate • uranium • zinc Samples shall be properly prepared, preserved, transported and analyzed in accordance with the methods authorized in this Discharge Permit. Analytical results shall be submitted to NMED in the monitoring reports due by August 1st each year. [Subsection A of 20.6.2.3107 NMAC, Subsections C and H of 20.6.2.3109 NMAC]
35.	Once during the term of this Discharge Permit, the permittee shall collect a grab sample of reclaimed wastewater from the outlet of the clay-lined storage impoundment and analyze the sample for the following organic constituents:

#	Terms and Conditions
	• benzene • benzo-a-pyrene • carbon tetrachloride • chloroform • 1,1-dichloroethane • 1,2-dichloroethane (EDC) • 1,1-dichloroethylene (1,1-DCE) • ethylbenzene • ethylene dibromide (EBD) • methylene chloride • PAHs: total naphthalene plus monomethylnaphthalenes • Phenols • Polychlorinated biphenyls (PCBs) • toluene • 1,1,2,2-tetrachloroethane • 1,1,2,2-tetrachloroethylene (PCE) • 1,1,1-trichloroethane • 1,1,2-trichloroethane • 1,1,2-trichloroethylene (TCE) • vinyl chloride • xylenes (total) Samples shall be properly prepared, preserved, transported and analyzed in accordance with the methods authorized in this Discharge Permit. Analytical results shall be submitted to NMED in the monitoring reports due by August 1st each year. [Subsection A of 20.6.2.3107 NMAC, Subsections C and H of 20.6.2.3109 NMAC]
36.	The permittee shall complete LADS (copy enclosed) on a monthly basis that document the amount of nitrogen applied to the re-use area during the most recent 12 months. The LADS shall reflect the total nitrogen concentration from the most recent wastewater analysis and the measured discharge volumes to the re-use area for each month. The LADS shall be completed with information above or shall include a statement that application of wastewater did not occur. The LADS shall be submitted to NMED in the quarterly monitoring reports. [Subsection A of 20.6.2.3107 NMAC, Subsection C of 20.6.2.3109 NMAC]

C. CONTINGENCY PLAN

#	Terms and Conditions
37.	In the event that ground water monitoring indicates that a ground water quality standard identified in Section 20.6.2.3103 NMAC is exceeded; the total nitrogen concentration in ground water is greater than 10 mg/L; or a toxic pollutant (defined in Subsection WW of 20.6.2.7 NMAC) is present in a ground water sample and in any subsequent ground water sample collected from a monitoring well required by this Discharge Permit, the permittee shall enact the following contingency plan: Within 60 days of the subsequent sample analysis date, the permittee shall propose

#	**Terms and Conditions**
	measures to ensure that the exceedance of the standard or the presence of a toxic pollutant will be mitigated by submitting a corrective action plan to NMED for approval. The corrective action plan shall include a description of the proposed actions to control the source and an associated completion schedule. The plan shall be enacted as approved by NMED. Once invoked (whether during the term of this Discharge Permit; or after the term of this Discharge Permit and prior to the completion of the Discharge Permit closure plan requirements), this condition shall apply until the permittee has fulfilled the requirements of this condition and ground water monitoring confirms for a minimum of two years of consecutive ground water sampling events that the standards of Section 20.6.2.3103 NMAC are not exceeded and toxic pollutants are not present in ground water. The permittee may be required to abate water pollution pursuant to Sections 20.6.2.4000 through 20.6.2.4115 NMAC, should the corrective action plan not result in compliance with the standards and requirements set forth in Section 20.6.2.4103 NMAC within 180 days of confirmed ground water contamination. [Subsection A of 20.6.2.3107 NMAC, Subsection E of 20.6.2.3109 NMAC]
38.	In the event that information available to NMED indicates that a well(s) is not constructed in a manner consistent with the attachment titled *Ground Water Discharge Permit Monitoring Well Construction and Abandonment Conditions*, Revision 1.1, March 2011; contains insufficient water to effectively monitor ground water quality; or is not completed in a manner that is protective of ground water quality, the permittee shall install a replacement well(s) within 120 days following notification from NMED. The permittee shall survey the replacement monitoring well(s) within 150 days following notification from NMED. Replacement well location(s) shall be approved by NMED prior to installation and completed in accordance with the attachment titled *Ground Water Discharge Permit Monitoring Well Construction and Abandonment Conditions*, Revision 1.1, March 2011. The permittee shall submit construction and lithologic logs, survey data and a ground water elevation contour map to NMED within 60 days following well completion. Upon completion of the replacement monitoring well(s), the monitoring well(s) requiring replacement shall be properly plugged and abandoned. Well plugging, abandonment and documentation of the abandonment procedures shall be completed in accordance with the attachment titled *Ground Water Discharge Permit Monitoring Well Construction and Abandonment Conditions*, Revision 1.1, March 2011, and all applicable local, state, and federal regulations. The well abandonment documentation shall be submitted to NMED within 60 days of completion of well plugging activities.

#	**Terms and Conditions**
	[Subsection A of 20.6.2.3107 NMAC]
39.	In the event that ground water flow information obtained pursuant to this Discharge Permit indicates that a monitoring well(s) is not located hydrologically downgradient of the discharge location(s) it is intended to monitor, the permittee shall install a replacement well(s) within 120 days following notification from NMED. The permittee shall survey the replacement monitoring well(s) within 150 days following notification from NMED. Replacement well location(s) shall be approved by NMED prior to installation and completed in accordance with the attachment titled *Ground Water Discharge Permit Monitoring Well Construction and Abandonment Conditions*, Revision 1.1, March 2011. The permittee shall submit construction and lithologic logs, survey data and a ground water elevation contour map within 30 days following well completion. [Subsection A of 20.6.2.3107 NMAC]
40.	In the event that analytical results of a quarterly treated wastewater sample indicate an exceedance of the total nitrogen limitation set in this Discharge Permit, the permittee shall collect and analyze a second sample within 30 days of the first sample analysis date. In the event the second sample results indicate that the limitation is continuing to be exceeded, the following contingency plan shall be enacted: a) Within 15 days of the second sample analysis date indicating that the limitation is continuing to be exceeded, the permittee shall i) notify NMED that the contingency plan is being enacted; and ii) submit a copy of the first and second analytical results indicating an exceedance to NMED. b) The permittee shall increase the frequency of total nitrogen wastewater sampling and analysis of treated wastewater to once per month. c) The permittee shall examine the operation and maintenance log, required by the Record Keeping conditions of this Discharge Permit, for improper operational procedures. d) The permittee shall conduct a physical inspection of the treatment system to detect abnormalities. Any abnormalities discovered shall be corrected. A report detailing the corrections made shall be submitted to NMED within 30 days of correction. e) In the event that any analytical results from monthly wastewater sampling indicate an exceedance of the total nitrogen limitation, the permittee shall propose to modify operational procedures and/or upgrade the treatment process to achieve the total nitrogen limit by submitting a corrective action plan to NMED for approval. The plan shall include a schedule for completion of corrective actions and shall be submitted within 90 days of the second sample analysis date indicating that the limitation is continuing to be exceeded. The permittee shall initiate implementation of the plan following approval by NMED.

#	**Terms and Conditions**
	When analytical results from three consecutive months of wastewater sampling do not exceed the limitation, the permittee is authorized to return to a quarterly monitoring frequency. [Subsection A of 20.6.2.3107 NMAC, Subsection C of 20.6.2.3109 NMAC]
41.	In the event that analytical results of a reclaimed domestic wastewater sample indicates an exceedance of any of the maximum limitations for BOD_5, TSS, or fecal coliform bacteria set by this Discharge Permit, the permittee shall collect and analyze a second sample within 24 hours after becoming aware of the exceedance. In the event the second sample results indicate that any maximum limitation is continuing to be exceeded (i.e., confirmed exceedance), the contingency plan below shall be enacted. **AND / OR** In the event that analytical results of a reclaimed domestic wastewater sample indicates an exceedance of any of the 30-day average limitations for BOD_5, TSS, or fecal coliform bacteria set by this Discharge Permit (i.e., confirmed exceedance), the contingency plan below shall be enacted. <u>Contingency Plan</u> a) Within 48 hours of becoming aware of a confirmed exceedance (as identified above), the permittee shall: i) notify NMED that the contingency plan is being enacted; and ii) submit copies of the recent analytical results indicating an exceedance to NMED. b) The permittee shall examine the operation and maintenance log, required by the Record Keeping conditions of this Discharge Permit, for improper operational procedures. c) The permittee shall conduct a physical inspection of the treatment system to detect abnormalities. Any abnormalities discovered shall be corrected. A report detailing the corrections made shall be submitted to NMED within 30 days following correction. If a facility is required to enact the contingency plan more than two times in a 12-month period, the permittee shall propose to modify operational procedures and/or upgrade the treatment process to achieve consistent compliance with the maximum and 30-day average limitations by submitting a corrective action plan for NMED approval. The plan shall include a schedule for completion of corrective actions and shall be submitted within 60 days following the second sample analysis date. The permittee shall initiate implementation of the plan following approval by NMED. Additional sampling of any stored reclaimed wastewater may be required by NMED in response to the submitted corrective action plan.

#	**Terms and Conditions**
	[Subsection A of 20.6.2.3107 NMAC, Subsection C of 20.6.2.3109 NMAC]
42.	In the event that the LADS show that the amount of nitrogen in wastewater applied in any 12-month period exceeds 200 pounds per acre, the permittee shall propose the reduction of nitrogen loading to the re-use area by submitting a corrective action plan to NMED for approval. The plan shall include a schedule for completion of corrective actions and shall be submitted within 90 days following the end of the monitoring period in which the exceedance occurred. The permittee shall initiate implementation of the plan following approval by NMED. [Subsection A of 20.6.2.3107 NMAC, Subsection C of 20.6.2.3109 NMAC]
43.	In the event that inspection findings reveal significant damage likely to affect the structural integrity of the lined impoundment(s) or its ability to contain contaminants, the permittee shall propose the repair or replacement of the impoundment liner(s) by submitting a corrective action plan to NMED for approval. The plan shall be submitted to NMED within 30 days after discovery by the permittee or following notification from NMED that significant liner damage is evident. The corrective action plan shall include a schedule for completion of corrective actions and the permittee shall initiate implementation of the plan following approval by NMED. [Subsection A of 20.6.2.3107 NMAC, Subsection C of 20.6.2.3109 NMAC]
44.	In the event that a minimum of two feet of freeboard cannot be preserved in the impoundment(s), the permittee shall take actions authorized by this Discharge Permit and all applicable local, state, and federal regulations to restore the required freeboard. In the event that two feet of freeboard cannot be restored within a period of 72 hours following discovery, the permittee shall propose actions to be immediately implemented to restore two feet of freeboard by submitting a short-term corrective action plan to NMED for approval. Examples of short-term corrective actions include: removing excess wastewater from the impoundment through pumping and hauling; or reducing the volume of wastewater discharged to the impoundment. The plan shall include a schedule for completion of corrective actions and shall be submitted within 15 days following the date when the two feet of freeboard limit was initially discovered. The permittee shall initiate implementation of the plan following approval by NMED. In the event that the short-term corrective actions failed to restore two feet of freeboard, the permittee shall propose permanent corrective actions in a long-term corrective action plan submitted to NMED within 90 days following failure of the short-term corrective action plan. Examples include: the installation of an additional storage impoundment, or a significant/permanent reduction in the volume of wastewater discharged to the impoundment. The plan shall include a schedule for completion of corrective actions and implementation of the plan shall be initiated following approval by NMED.

#	**Terms and Conditions**
	[Subsection A of 20.6.2.3107 NMAC]
45.	In the event that a release (commonly known as a "spill") occurs that is not authorized under this Discharge Permit, the permittee shall take measures to mitigate damage from the unauthorized discharge and initiate the notifications and corrective actions required in Section 20.6.2.1203 NMAC and summarized below. Within 24 hours following discovery of the unauthorized discharge, the permittee shall verbally notify NMED and provide the following information: a) The name, address, and telephone number of the person or persons in charge of the facility, as well as of the owner and/or operator of the facility. b) The name and address of the facility. c) The date, time, location, and duration of the unauthorized discharge. d) The source and cause of unauthorized discharge. e) A description of the unauthorized discharge, including its estimated chemical composition. f) The estimated volume of the unauthorized discharge. g) Any actions taken to mitigate immediate damage from the unauthorized discharge. Within one week following discovery of the unauthorized discharge, the permittee shall submit written notification to NMED with the information listed above and any pertinent updates. Within 15 days following discovery of the unauthorized discharge, the permittee shall submit a corrective action report/plan to NMED describing any corrective actions taken and/or to be taken relative to the unauthorized discharge that includes the following: a) A description of proposed actions to mitigate damage from the unauthorized discharge. b) A description of proposed actions to prevent future unauthorized discharges of this nature. c) A schedule for completion of proposed actions. In the event that the unauthorized discharge causes or may with reasonable probability cause water pollution in excess of the standards and requirements of Section 20.6.2.4103 NMAC, and the water pollution will not be abated within 180 days after notice is required to be given pursuant to Paragraph (1) of Subsection A of 20.6.2.1203 NMAC, the permittee may be required to abate water pollution pursuant to Sections 20.6.2.4000 through 20.6.2.4115 NMAC. Nothing in this condition shall be construed as relieving the permittee of the obligation to comply with all requirements of Section 20.6.2.1203 NMAC. [20.6.2.1203 NMAC]

#	Terms and Conditions
46.	In the event that NMED or the permittee identifies any failures of the discharge plan or this Discharge Permit not specifically noted herein, NMED may require the permittee to submit a corrective action plan and a schedule for completion of corrective actions to address the failure(s). Additionally, NMED may require a Discharge Permit modification to achieve compliance with 20.6.2 NMAC. [Subsection A of 20.6.2.3107 NMAC, Subsection E of 20.6.2.3109 NMAC]

D. CLOSURE PLAN

Permanent Facility Closure Conditions

#	Terms and Conditions
47.	In the event a facility, or a component of a facility, is proposed to be permanently closed, upon ceasing discharging, the permittee shall perform the following closure measures: Within 60 days of ceasing discharging to the impoundment(s), the line leading to the impoundments shall be plugged so that a discharge can no longer occur. Within 60 days of ceasing discharging to the impoundment(s), wastewater shall be discharged from the impoundment and any other wastewater system components to the re-use area, as authorized by this Discharge Permit. The discharge of accumulated solids (sludge) from the impoundment to the re-use area is prohibited. Within 90 days of ceasing discharging to the impoundment(s), the permittee shall submit a sludge removal and disposal plan to NMED for approval. The permittee shall initiate implementation of the plan within 30 days following approval by NMED. The sludge removal and disposal plan shall include the following: a) The estimated volume and dry weight of sludge to be removed and disposed, including measurements and calculations. b) Analytical results for samples of the sludge taken from the impoundment for TKN, NO_3-N, percent total solids, and any other parameters tested (reported in mg/kg, dry weight basis). c) The method(s) of sludge *removal* from the impoundment(s). d) The method(s) of *disposal* for all of the sludge (and its contents) removed from the impoundment(s). The method(s) shall comply with all local, state and federal regulations, including 40 CFR Part 503. *Note: A proposal that includes the surface disposal of sludge may be subject to Ground Water Discharge Permitting requirements pursuant to 20.6.2.3104 NMAC that are separate from the requirements of this Discharge Permit.* e) A schedule for completion of sludge removal and disposal not to exceed two years from the date discharge to the impoundment(s) ceased.

#	Terms and Conditions
	Within <u>one year</u> following completion of the sludge removal and disposal, the permittee shall complete the following closure measures: a) Remove all lines leading to and from the impoundment(s), or permanently plug and abandon them in place. b) Remove or demolish any other wastewater system components and re-grade area with suitable fill to blend with surface topography, promote positive drainage and prevent ponding. c) Perforate or remove the impoundment liner(s). d) Fill the impoundment(s) with suitable fill. e) Re-grade the impoundment site to blend with surface topography, promote positive drainage and prevent ponding. The permittee shall continue ground water monitoring until the requirements of this condition have been met and ground water monitoring confirms for a minimum of two years of consecutive ground water sampling events that the standards of Section 20.6.2.3103 NMAC are not exceeded and toxic pollutants are not present in ground water. If monitoring results show that a ground water quality standard in Section 20.6.2.3103 NMAC is exceeded; the total nitrogen concentration in ground water is greater than 10 mg/L; or a toxic pollutant (defined in Subsection WW of 20.6.2.7 NMAC) is present in ground water, the permittee shall implement the contingency plan required by this Discharge Permit. Following notification from NMED that post-closure monitoring may cease, the permittee shall plug and abandon the monitoring well(s) in accordance with the attachment titled *Ground Water Discharge Permit Monitoring Well Construction and Abandonment Conditions*, Revision 1.1, March 2011. When all closure and post-closure requirements have been met, the permittee may submit a written request for termination of the Discharge Permit to NMED. [Subsection A of 20.6.2.3107 NMAC, 40 CFR Part 503]

E. GENERAL TERMS AND CONDITIONS

#	Terms and Conditions
48.	RECORD KEEPING - The permittee shall maintain a written record of the following information: a) Information and data used to complete the application for this Discharge Permit. b) Records of any releases (commonly known as "spills") not authorized under this Discharge Permit and reports submitted pursuant to 20.6.2.1203 NMAC.

#	**Terms and Conditions**
	c) Records of the operation, maintenance, and repair of all facilities/equipment used to treat, store or dispose of wastewater. d) Facility record drawings (plans and specifications) showing the actual construction of the facility and bear the seal and signature of a licensed New Mexico professional engineer. e) Copies of monitoring reports completed and/or submitted to NMED pursuant to this Discharge Permit. f) The volume of wastewater or other wastes discharged pursuant to this Discharge Permit. g) Ground water quality and wastewater quality data collected pursuant to this Discharge Permit. h) Copies of construction records (well log) for all ground water monitoring wells required to be sampled pursuant to this Discharge Permit. i) Records of the maintenance, repair, replacement or calibration of any monitoring equipment or flow measurement devices required by this Discharge Permit. j) Data and information related to field measurements, sampling, and analysis conducted pursuant to this Discharge Permit. The following information shall be recorded and shall be made available to NMED upon request: i) The dates, location and times of sampling or field measurements; ii) The name and job title of the individuals who performed each sample collection or field measurement; iii) The sample analysis date of each sample; iv) The name and address of the laboratory, and the name of the signatory authority for the laboratory analysis; v) The analytical technique or method used to analyze each sample or collect each field measurement; vi) The results of each analysis or field measurement, including raw data; vii) The results of any split, spiked, duplicate or repeat sample; and viii) A copy of the laboratory analysis chain-of-custody as well as a description of the quality assurance and quality control procedures used. The written record shall be maintained by the permittee at a location accessible during a facility inspection by NMED for a period of at least five years from the date of application, report, collection or measurement and shall be made available to the department upon request. [Subsections A and D of 20.6.2.3107 NMAC]
49.	INSPECTION and ENTRY – The permittee shall allow inspection by NMED of the facility and its operations which are subject to this Discharge Permit and the WQCC regulations. NMED may upon presentation of proper credentials, enter at reasonable times upon or through any premises in which a water contaminant source is located or in which are located any records required to be maintained by regulations of the federal government or the WQCC.

#	**Terms and Conditions**
	The permittee shall allow NMED to have access to and reproduce for their use any copy of the records, and to perform assessments, sampling or monitoring during an inspection for the purpose of evaluating compliance with this Discharge Permit and the WQCC regulations. Nothing in this Discharge Permit shall be construed as limiting in any way the inspection and entry authority of NMED under the WQA, the WQCC Regulations, or any other local, state or federal regulations. [Subsection D of 20.6.2.3107 NMAC, NMSA 1978, §§ 74-6-9.B and 74-6-9.E]
50.	DUTY to PROVIDE INFORMATION - The permittee shall, upon NMED's request, allow NMED's inspection/duplication of records required by this Discharge Permit and/or furnish to NMED copies of such records. [Subsection D of 20.6.2.3107 NMAC]
51.	MODIFICATIONS and/or AMENDMENTS – In the event the permittee proposes a change to the facility or the facility's discharge that would result in a change in the volume discharged; the location of the discharge; or in the amount or character of water contaminants received, treated or discharged by the facility, the permittee shall notify NMED prior to implementing such changes. The permittee shall obtain approval (which may require modification of this Discharge Permit) by NMED prior to implementing such changes. [Subsection C of 20.6.2.3107 NMAC, Subsections E and G of 20.6.2.3109 NMAC]
52.	PLANS and SPECIFICATIONS – In the event the permittee is proposing to construct a wastewater system or change a process unit of an existing system such that the quantity or quality of the discharge will change substantially from that authorized by this Discharge Permit, the permittee shall submit construction plans and specifications to NMED for the proposed system or process unit prior to the commencement of construction. In the event the permittee implements changes to the wastewater system authorized by this Discharge Permit which result in only a minor effect on the character of the discharge, the permittee shall report such changes (including the submission of record drawings, where applicable) as of January 1 and June 30 of each year to NMED. [Subsections A and C of 20.6.2.1202 NMAC, NMSA 1978, §§ 61-23-1 through 61-23-32]
53.	CIVIL PENALTIES - Any violation of the requirements and conditions of this Discharge Permit, including any failure to allow NMED staff to enter and inspect records or facilities, or any refusal or failure to provide NMED with records or information, may

#	**Terms and Conditions**
	subject the permittee to a civil enforcement action. Pursuant to WQA 74-6-10(A) and (B), such action may include a compliance order requiring compliance immediately or in a specified time, assessing a civil penalty, modifying or terminating the Discharge Permit, or any combination of the foregoing; or an action in district court seeking injunctive relief, civil penalties, or both. Pursuant to WQA 74-6-10(C) and 74-6-10.1, civil penalties of up to $15,000 per day of noncompliance may be assessed for each violation of the WQA 74-6-5, the WQCC Regulations, or this Discharge Permit, and civil penalties of up to $10,000 per day of noncompliance may be assessed for each violation of any other provision of the WQA, or any regulation, standard, or order adopted pursuant to such other provision. In any action to enforce this Discharge Permit, the permittee waives any objection to the admissibility as evidence of any data generated pursuant to this Discharge Permit. [20.6.2.1220 NMAC, NMSA 1978, §§ 74-6-10 and 74-6-10.1]
54.	CRIMINAL PENALTIES – No person shall: 1) make any false material statement, representation, certification or omission of material fact in an application, record, report, plan or other document filed, submitted or required to be maintained under the WQA; 2) falsify, tamper with or render inaccurate any monitoring device, method or record required to be maintained under the WQA; or 3) fail to monitor, sample or report as required by a permit issued pursuant to a state or federal law or regulation. Any person who knowingly violates or knowingly causes or allows another person to violate the requirements of this condition is guilty of a fourth degree felony and shall be sentenced in accordance with the provisions of NMSA 1978, § 31-18-15. Any person who is convicted of a second or subsequent violation of the requirements of this condition is guilty of a third degree felony and shall be sentenced in accordance with the provisions of NMSA 1978, § 31-18-15. Any person who knowingly violates the requirements of this condition or knowingly causes another person to violate the requirements of this condition and thereby causes a substantial adverse environmental impact is guilty of a third degree felony and shall be sentenced in accordance with the provisions of NMSA 1978, § 31-18-15. Any person who knowingly violates the requirements of this condition and knows at the time of the violation that he is creating a substantial danger of death or serious bodily injury to any other person is guilty of a second degree felony and shall be sentenced in accordance with the provisions of NMSA 1978, § 31-18-15. [20.6.2.1220 NMAC, NMSA 1978, §§ 74-6-10.2.A through 74-6-10.2.F]
55.	COMPLIANCE with OTHER LAWS - Nothing in this Discharge Permit shall be construed in any way as relieving the permittee of the obligation to comply with all applicable federal, state, and local laws, regulations, permits or orders.

#	**Terms and Conditions**
	[NMSA 1978, § 74-6-5.L]
56.	RIGHT to APPEAL - The permittee may file a petition for review before the WQCC on this Discharge Permit. Such petition shall be in writing to the WQCC within thirty days of the receipt of postal notice of this Discharge Permit and shall include a statement of the issues to be raised and the relief sought. Unless a timely petition for review is made, the decision of NMED shall be final and not subject to judicial review. [20.6.2.3112 NMAC, NMSA 1978, § 74-6-5.O]
57.	TRANSFER of DISCHARGE PERMIT - Prior to the transfer of any ownership, control, or possession of this facility or any portion thereof, the permittee shall: 1) notify the proposed transferee in writing of the existence of this Discharge Permit; 2) include a copy of this Discharge Permit with the notice; and 3) deliver or send by certified mail to NMED a copy of the notification and proof that such notification has been received by the proposed transferee. Until both ownership and possession of the facility have been transferred to the transferee, the permittee shall continue to be responsible for any discharge from the facility. [20.6.2.3111 NMAC]
58.	PERMIT FEES - Payment of permit fees is due at the time of Discharge Permit approval. Permit fees shall be paid in a single payment or shall be paid in equal installments on a yearly basis over the term of the Discharge Permit. Single payments shall be remitted to NMED no later than 30 days after the Discharge Permit effective date. Initial installment payments shall be remitted to NMED no later than 30 days after the Discharge Permit effective date; subsequent installment payments shall be remitted to NMED no later than the anniversary of the Discharge Permit effective date. Permit fees are associated with <u>issuance</u> of this Discharge Permit. Nothing in this Discharge Permit shall be construed as relieving the permittee of the obligation to pay all permit fees assessed by NMED. A permittee that ceases discharging or does not commence discharging from the facility during the term of the Discharge Permit shall pay all permit fees assessed by NMED. An approved Discharge Permit shall be suspended or terminated if the facility fails to remit an installment payment by its due date. [Subsection F of 20.6.2.3114 NMAC, NMSA 1978, § 74-6-5.K]

V. PERMIT TERM & SIGNATURE

EFFECTIVE DATE: August 15, 2012

TERM ENDS: August 15, 2017

[Subsection H of 20.6.2.3109 NMAC, NMSA 1978, § 74-6-5.I]

FOR JERRY SCHOEPPNER
Chief, Ground Water Quality Bureau
New Mexico Environment Department

New Mexico Environment Department Ground Water Quality Bureau
Discharge Permit Summary

Facility Information

Facility Name	Quill Wastewater Treatment Facility
Discharge Permit Number	DP-234
Legally Responsible Party	Charles Gara, Division Director State of New Mexico General Services Department Property Control Division 1100 St. Francis Drive Rm. 2022 Santa Fe, New Mexico 87501 (505) 827-2141

Treatment, Disposal and Site Information

Primary Waste Type	Domestic Wastewater
Facility Type	Aerated Impoundment System

Treatment Methods

Type	Designation	Description & Comments
Wastewater Treatment System	Solids Separation	Mechanical Bar Screen. Screenings are disposed of in a dumpster and hauled to a landfill for disposal.
	Primary Treatment Impoundments	Consists of two synthetically (hypalon) lined, aerated cells designated as East and West • May be operated in series or parallel • Cell Capacity: 843,600 gallons each • Surface Area: 0.41 acres (note: The West Impoundment's synthetic liner will be replaced during the term of this Discharge Permit)
	Secondary Stabilization Impoundments	Consists of two synthetically (hypalon) lined cells, designated as East and West • Map be operated in series or parallel • Cell Capacity: 2,888,800 gallons each • Surface Area: 1.98 acres
	Disinfection Unit	Chlorine Contact Chamber equipped with a Sodium Hypochlorite (HTH) tablet dispensing system

Discharge Locations

Type	Designation	Description & Comments
Impoundment	Storage for Irrigation	Clay-lined with concrete sidewalls • Cell Capacity: 19,953,000 gallons • Surface Area: 5.56 acres
Re-use Area	South Field	38 acres of rangeland
Re-use Area	North Field	57 acres of rangeland

Flow Metering Locations

Type	Designation	Description & Comments
Primary Measurement Device	Influent Entrance Works	Parshall flume equipped with head sensing ultrasonic flow meter and chart recording
Totalizing Flow Meter	Reuse pump station	Transit time flow meter

Ground Water Monitoring Locations

Type	Designation	Description & Comments
Monitoring Well 1	MW-1	Intended to be located hydrologically upgradient and 50 feet northeast of stabilization impoundment #2
Monitoring Well 2	MW-2	Intended to be located hydrologically downgradient and 50 feet northwest of stabilization impoundment #1.
Monitoring Well 3	MW-3	Intended to be located hydrologically downgradient and 40 feet west of stabilization impoundment #1
Monitoring Well 4	MW-4	Intended to be located hydrologically downgradient and within 20-50 feet west of the north re-use area's irrigated boundary (To Be Installed)

Depth-to-Ground Water 90 feet
Total Dissolved Solids (TDS) 170 mg/L

Permit Information

Application Received May 27, 2011 and July 18, 2011
Public Notice Published April 27, 2012
Discharge Permit Issued August 15, 2012
Discharge Permit Term Ends August 15, 2017
Permitted Discharge Volume 280,000 gallons per day

NMED Contact Information

Mailing Address Ground Water Quality Bureau
P.O. Box 5469
Santa Fe, New Mexico 87502-5469

GWQB Telephone Number (505) 827-2900

NMED Lead Staff Steve Pedro
Lead Staff Telephone Number (505) 827-2957
Lead Staff Email steven.pedro@state.nm.us

NMED GROUND WATER QUALITY BUREAU GUIDANCE:

ABOVE GROUND USE OF RECLAIMED DOMESTIC WASTEWATER

January 2007

PURPOSE

This document provides guidance for the above ground use of reclaimed domestic wastewater necessary to ensure protection of public health and the environment. The New Mexico Environment Department (NMED) has developed this guidance document to promote the safe use of reclaimed wastewater to offset the use of limited potable water resources in the State. This guidance document is intended to provide direction for any person seeking to submit an application for a Ground Water Discharge Permit that includes the above ground use of reclaimed wastewater. This document is used by NMED technical staff to ensure consistency in the application review process and in the development of permit requirements. This guidance document will also be made available to the regulated community and their consultants to provide a basis for future facility planning.

Ground Water Discharge Permit applications for above ground use of reclaimed domestic wastewater that follow this guidance document will be approved. However, applicants may make alternative demonstrations to NMED that the existing or proposed discharge of reclaimed domestic wastewater at a specific facility is protective of public health and the environment. NMED encourages the development and implementation of new processes and equipment, and will favorably consider them on a case by case basis.

The generator of the reclaimed wastewater is responsible for discharges of reclaimed wastewater unless this responsibility is assumed by a separate entity pursuant to an approved Ground Water Discharge Permit. Implementation of the requirements for existing dischargers will be determined on an individual facility basis at the time of permit renewal and/or modification.

Finally, the discharge of reclaimed wastewater may also be regulated by the New Mexico Construction Industries Division (CID). For example, the use of reclaimed wastewater for indoor plumbing (e.g., toilet flushing, fire suppression) requires approval from CID.

DEFINITIONS

The following definitions are used in this guidance document:

Agronomic Rate: the rate of application of nutrients to plants that is necessary to satisfy the plants' nutritional requirements while strictly minimizing the amount of nutrients that run off to surface waters or which pass below the root zone of the plants.

Class 1A Reclaimed Wastewater: the highest quality reclaimed wastewater described in this guidance document and can be most broadly utilized except for direct consumption. [approved uses listed in Table 1]

Class 1B Reclaimed Wastewater: the second highest quality reclaimed wastewater described in this guidance document and is suitable for uses in which public exposure is likely. [approved uses listed in Table 1]

Class 2 Reclaimed Wastewater: reclaimed wastewater suitable for uses in which public access and exposure is restricted. [approved uses listed in Table 1]

Class 3 Reclaimed Wastewater: reclaimed wastewater suitable for uses in which public access and exposure is prohibited. [approved uses listed in Table 1]

Domestic wastewater: wastewater containing human excreta and water-carried waste from typical residential plumbing fixtures and activities, including but not limited to wastes from toilets, sinks, bath fixtures, clothes or dishwashing machines and floor drains.

Dwelling unit: a structure which contains bedrooms.

Establishment: a structure used as a place of business, education, or assembly.

Flood Irrigation: land application of reclaimed wastewater by ditches, furrows, pipelines, low flow emitters and other non-sprinkler methods.

Food Crops: any crop intended for human consumption.

Grab Sample: an individual sample collected in less than 15 minutes.

Major WWTP: any treatment plant with a maximum design capacity of 1,000,000 gallons or more per day.

Minor WWTP: any treatment plant with a maximum design capacity of less than 1,000,000 gallons per day.

Monthly Geometric Mean: value calculated by taking the sum of the logarithms (sum log x) of each of the data points from the previous calendar month, dividing the sum by the number of data points and then taking the anti-logarithm of the result (10^y = anti-logarithm of 'y').

NTU: nephelometric turbidity units, measured by a nephelometer.

Occupied establishment: any establishment that is occupied regularly at the time of irrigation.

Peak hourly flow: the highest hourly flow rate within a 24 hour period.

Reclaimed wastewater: domestic wastewater that has been treated to the specified levels for the defined uses set forth in this guidance document and other applicable local, state, or federal regulations.

Spray Irrigation: land application of reclaimed wastewater by dispersing it in the air utilizing equipment which provides a low trajectory application and which minimizes misting of the reclaimed wastewater.

3-hour Composite Sample: three effluent portions collected no closer together than one hour (collected between 8:00 am and 4:00 pm) and composited in proportion to flow.

6-hour Composite Sample: six effluent portions collected no closer together than one hour (collected between 8:00 am and 4:00 pm) and composited in proportion to flow.

24-hour Composite Sample: twenty-four effluent portions collected no closer together than one hour and composited in proportion to flow.

30-day Average:

> *For fecal coliform bacteria*: the geometric mean of the values for all effluent samples collected during a calendar month.
>
> *For other than for fecal coliform bacteria*: the arithmetic mean of the daily values for all effluent samples collected during a calendar month, calculated as the sum of all daily discharges measured during a calendar month divided by the number of daily discharges measured during that month.

BACKGROUND

This guidance document supersedes the New Mexico Environmental Improvement Division (NMEID) 1985 Policy for the Use of Domestic Wastewater Effluent for Irrigation and NMED's 2003 Policy for the Above Ground Use of Reclaimed Domestic Wastewater. This guidance document establishes reclaimed wastewater quality levels, site restrictions, management practices, and uses for different categories of reclaimed wastewater that are approvable by NMED. Unless an alternative demonstration is proposed by the applicant and accepted by NMED, NMED will propose Ground Water Discharge Permit conditions for above ground discharges of reclaimed wastewater based on the recommendations set forth in this guidance document. While the requirements set forth in this guidance document are deemed protective of public health and the environment, the guidance document does not prevent communities from adopting more stringent requirements.

WASTEWATER TREATMENT PROCESSES

The specified quality levels for Class 1B, Class 2, and Class 3 assume a minimum of conventional secondary wastewater treatment plus disinfection. Class 1A assumes treatment to remove colloidal organic matter, color, and other substances that interfere with disinfection, thereby allowing for the use of the reclaimed wastewater for urban landscaping adjacent to dwelling units or occupied establishments.

GENERAL ABOVE GROUND USE PERMIT CONDITIONS

A. ALL APPROVED USES

1. Whenever reclaimed wastewater is used for any use approved in this guidance document, the wastewater should meet the minimum requirements set forth in this guidance document, unless a demonstration is made that an alternate requirement offers an equivalent protection of public health. The burden of proof for an alternative demonstration rests upon the discharger.
2. Whenever reclaimed wastewater other than Class 1A is used in areas with public access, it should be applied at times and in a manner that minimizes public contact.
3. Whenever reclaimed wastewater is used in areas with restricted public access, the public should be excluded from entering the area.
4. Reclaimed wastewater should only be used for soil compaction or dust control in construction areas where application procedures minimize aerosol drift to public areas.
5. Reclaimed wastewater quality requirements should be measured at the discharge point of the wastewater treatment plant.
6. Signs (in English and Spanish) should be placed at the entrance to areas receiving reclaimed wastewater, and other locations where public access may occur stating: "**NOTICE – THIS AREA IS IRRIGATED WITH RECLAIMED WASTEWATER – DO NOT DRINK**"; "**AVISO – ESTA ÁREA ESTÁ REGADA CON AGUAS NEGRAS RECOBRADAS – NO TOMAR**". Alternate wording may be approved by NMED.
7. All piping, valves and outlets should be color-coded in purple pursuant to the latest revision of the New Mexico Plumbing and Mechanical Code to differentiate piping or fixtures used to convey reclaimed wastewater from piping or fixtures used for potable or other water. All valves, outlets, and sprinkler heads used in reclaimed wastewater systems should be of a type that can only be operated by authorized personnel. Those

portions of reclaimed wastewater systems that are underground and were installed prior to the adoption of this guidance document are exempt from the purple color-coding requirement if all accessible portions of the reclaimed wastewater system are colored purple or clearly labeled as being part of a reclaimed wastewater distribution system.

8. Reclaimed wastewater systems should have no direct or indirect cross connections with potable water systems pursuant to the latest revision of the New Mexico Plumbing and Mechanical Code. For reclaimed wastewater systems that were installed prior to the adoption of this guidance document, the absence of cross connections may be demonstrated via hydrostatic testing or as-built drawings, supported by an affidavit under oath that no cross connection exists.
9. Above ground use of reclaimed wastewater should not result in excessive standing or pooling of wastewater, and should be applied at the appropriate agronomic rate. Irrigation should not be conducted at times when the receiving area is saturated or frozen.
10. The discharge of reclaimed wastewater should be confined to the area designated and approved for receiving the wastewater. Irrigation should be postponed at times when windy conditions may result in drift of reclaimed wastewater outside the designated area of application.
11. Treatment facilities that provide reclaimed wastewater to parks, golf courses, schools and other areas where human exposure is likely must have an emergency storage pond or alternate disposal method where reclaimed wastewater can be diverted during periods when conditions are unfavorable for approved uses or when the quality requirements defined in this guidance document cannot be met.

B. IRRIGATION OF FOOD CROPS

1. Reclaimed wastewater should not be used for the spray irrigation of food crops.
2. Reclaimed wastewater should not be used for surface irrigation of food crops except where there is no contact between the edible portion of the crop and the wastewater, and the wastewater should have a level of quality no less than Class 1B Reclaimed Wastewater (Table 2).

C. IRRIGATION OF FODDER, FIBER AND SEED CROPS

1. Reclaimed wastewater used for the irrigation of pasture to which milking cows or goats have access should have a level of quality no less than Class 2 Reclaimed Wastewater (Table 2).
2. Except pasture for milk-producing animals, reclaimed wastewater used for the irrigation of fodder, fiber and seed crops should have a level of quality no less than Class 3 Reclaimed Wastewater (Table 2).

D. IRRIGATION OF LANDSCAPES

1. Reclaimed wastewater used for irrigation should be applied such that direct and windblown spray is confined to the area designated and approved for application.
2. Reclaimed wastewater used for the irrigation of freeway landscapes and landscapes in other areas where the public has similarly limited access or exposure should have a level of quality no less than Class 2 Reclaimed Wastewater (Table 2). Public access to the irrigation site must be restricted during the period of application.

3. Reclaimed wastewater used for the irrigation of parks, playgrounds, schoolyards, golf courses, cemeteries and other areas where the public has similarly open access should have a level of quality no less than Class 1B Reclaimed Wastewater (Table 2), and the irrigation system should have low trajectory spray nozzles. *Areas which are spray irrigated and located within 100 feet of a dwelling unit or occupied establishment should only receive Class 1A Reclaimed Wastewater* (Tables 2 & 3).

CLASSIFICATION AND USES OF RECLAIMED WASTEWATER

This guidance document identifies four classes of reclaimed wastewater (Class 1A, Class 1B, Class 2, and Class 3) based on reclaimed wastewater quality and the likelihood of public exposure. Table 1 presents the approved uses.

Table 1. Approved Uses for Reclaimed Wastewater by Class

Class of Reclaimed Wastewater	Approved Uses
Class 1A	All Class 1 uses. *No setback limit* to dwelling unit or occupied establishment.
	Backfill around potable water pipes
	Irrigation of food crops[1]
Class 1B	Impoundments (recreational or ornamental)
	Irrigation of parks, school yards, golf courses [2]
	Irrigation of urban landscaping [2]
	Snow making
	Street cleaning
	Toilet flushing
	Backfill around non-potable piping
Class 2	Concrete mixing
	Dust control
	Irrigation of fodder, fiber, and seed crops for milk-producing animals
	Irrigation of roadway median landscapes
	Irrigation of sod farms
	Livestock watering
	Soil compaction
Class 3	Irrigation of fodder, fiber, and seed crops for non-milk-producing animals
	Irrigation of forest trees (silviculture)

[1] Irrigation of food crops should only be allowed for food crops when there is no contact between the edible portion of the crop and the wastewater. Spray irrigation is prohibited for food crops.

[2] If reclaimed wastewater is applied using spray irrigation, the setback limitation of Table 3 "Spray Irrigation" should be observed.

Class 1A reclaimed wastewater may be used for any purpose except direct consumption, food handling and processing, and spray irrigation of food crops. Class 1B reclaimed wastewater may be used where public exposure is likely, and where the appropriate setback requirements are met (Table 3, page 9). Class 2 and Class 3 reclaimed wastewater may be used where public access is restricted with correspondingly less stringent requirements for treatment and disinfection. Any reclaimed wastewater treated to higher quality than the lower classes may be used for the purposes established for the lower classes. *Other uses of reclaimed wastewater not included in Table 1 will be evaluated on a case by case basis by NMED to determine the appropriate water quality classification for the given use.*

WASTEWATER QUALITY LEVELS AND MONITORING PROTOCOL

This section identifies minimum wastewater quality levels and monitoring frequencies for the various classes of reclaimed wastewater. The frequency of wastewater quality monitoring is patterned after U.S. Environmental Protection Agency (USEPA) requirements for discharges of treated and disinfected wastewater to surface waters. Monitoring requirements are dependent on the quality of reclaimed wastewater produced at the treatment plant and the design capacity of the treatment plant. For example, a “major” wastewater treatment plant (having a maximum design capacity of 1 million gallons or more per day) producing Class 1A Reclaimed Wastewater has the most stringent monitoring requirements. The wastewater quality levels and monitoring frequencies for the various classes of reclaimed wastewater are presented in Table 2. In the event that a facility proposes alternative wastewater quality levels and/or monitoring frequencies, it is the responsibility of the facility owner/operator to demonstrate that the alternative proposal provides an equivalent measure of public health protection as the measures set forth in this guidance document.

Table 2. Wastewater Quality Requirements and Monitoring Frequencies by Class of Reclaimed Wastewater

Class of Reclaimed Wastewater	Wastewater Quality Parameter	Wastewater Quality Requirements		Wastewater Monitoring Requirements	
		30-Day Average	Maximum	Sample Type	Measurement Frequency
Class 1A	BOD_5	10 mg/l	15 mg/l	Minimum of 6-hour composite	3 tests per week for major WWTP[1]; 1 test per 2 weeks for minor WWTP
	Turbidity	3 NTU	5 NTU	Continuous	Continuous
	Fecal Coliform	5 per 100 ml	23 per 100 ml	Grab sample at peak flow	3 tests per week for major WWTP; 1 test per week for minor WWTP
	TRC or UV Transmissivity	Monitor Only	Monitor Only	Grab sample or reading at peak flow	Record values at peak hourly flow when Fecal Coliform samples are collected
Class 1B	BOD_5	30 mg/l	45 mg/l	Minimum of 6-hour composite	3 tests per week for major WWTP[1]; 1 test per 2 weeks for minor WWTP
	TSS	30 mg/l	45 mg/l	Minimum of 6-hour composite	3 tests per week for major WWTP[1]; 1 test per 2 weeks for minor WWTP
	Fecal Coliform	100 organisms per 100 ml	200 organisms per 100 ml	Grab sample at peak flow	3 tests per week for major WWTP; 1 test per week for minor WWTP
	TRC or UV Transmissivity	Monitor Only	Monitor Only	Grab sample or reading at peak flow	Record values at peak hourly flow when Fecal Coliform samples are collected

Table 2. Wastewater Quality Requirements and Monitoring Frequencies by Class of Reclaimed Wastewater (continued)

Class of Reclaimed Wastewater	Wastewater Quality Parameter	Wastewater Quality Requirements		Wastewater Monitoring Requirements	
		30-Day Average	Maximum	Sample Type	Measurement Frequency
Class 2	BOD_5	30 mg/l	45 mg/l	Minimum of 6-hour composite for major WWTP; Grab sample for minor WWTP	1 test per week for major WWTP; 1 test per month for minor WWTP
	TSS	30 mg/l	45 mg/l	Minimum of 6-hour composite for major WWTP; Grab sample for minor WWTP	1 test per week for major WWTP; 1 test per month for minor WWTP
	Fecal Coliform	200 organisms per 100 ml	400 organisms per 100 ml	Grab sample at peak hourly flow	1 test per week for major WWTP; 1 test per month for minor WWTP
	TRC or UV Transmissivity	Monitor Only	Monitor Only	Grab sample or reading at peak hourly flow	Record values at peak hourly flow when Fecal Coliform samples are collected
Class 3	BOD_5	30 mg/l	45 mg/l	Minimum of 3-hour composite for major WWTP[5]; Grab sample for minor WWTP	1 test per week for major WWTP; 1 test per month for minor WWTP
	TSS	75 mg/l	90 mg/l	Minimum of 3-hour composite for major WWTP; Grab sample for minor WWTP	1 test per week for major WWTP; 1 test per month for minor WWTP
	Fecal Coliform	1,000 organisms per 100 ml	5,000 organisms per 100 ml	Grab sample at peak hourly flow	1 test per week for major WWTP; 1 test per month for minor WWTP
	TRC or UV Transmissivity	Monitor Only	Monitor Only	Grab sample or reading at peak hourly flow	Record values at peak hourly flow when Fecal Coliform samples are collected

Note: *E*. coli may be used in place of Fecal Coliform as an indicator organism, once an equivalency has been established.

ACCESS RESTRICTIONS AND SET-BACK REQUIREMENTS

Table 3 presents the access controls and setback distances necessary to minimize direct and indirect public exposure to reclaimed wastewater. Setback distances recommended in this guidance document are in all cases the distance from the edge of any area receiving reclaimed wastewater to well casings, dwelling units, or occupied establishments.

In addition to the setbacks described in Table 3, all water supply wells within 200 feet of a wetted irrigation area must be evaluated for adequate well head construction and irrigation practices to ensure protection of ground water. NMED may impose additional setbacks as needed to make certain that the application of reclaimed wastewater does not threaten ground water resources.

Table 3. Access Restrictions and Set Back Requirements

Class of Reclaimed Wastewater	Spray Irrigation	Flood Irrigation and Surface Drip Irrigation
Class 1A	• No access control • No setback to dwelling unit or occupied establishment • Low pressure/low trajectory irrigation system only	• No access control
Class 1B	• No access control; irrigate at times when public exposure is unlikely • 100 ft set-back from dwelling unit or occupied establishment • Low pressure/low trajectory irrigation system only	• No access control; irrigate at times when public exposure is unlikely
Class 2	• Access restricted by perimeter fencing using 4-strand barbed wire and locking gate or other NMED approved access controls • 100 ft set-back from dwelling unit or occupied establishment • Low pressure/low trajectory irrigation system only	• Access restricted by perimeter fencing using 4-strand barbed wire and locking gate, or other NMED approved access controls
Class 3	• Access restricted by perimeter fencing using 4-strand barbed wire and locking gate • 500 ft set-back from dwelling unit or occupied establishment • Low pressure/low trajectory irrigation system only	• Access restricted by perimeter fencing using 4-strand barbed wire and locking gate • 100 ft set-back to dwelling unit or occupied establishment.

Appendix D.

Manufacturer Information

This page intentionally left blank.

MemPulse™ Membrane Bioreactor System

SANTA FE COUNTY QUILL WWTF
DECEMBER 15, 2016

BUDGETARY PROPOSAL NO. 17P1833MBR

Submitted to
Ed DuBois, PE
HDR, Inc.

558 Clark Road, Tewksbury, MA 01876
+1 (978) 863-4600 (Tel) +1 (978) 851-5037 (Fax) www.evoqua.com

EXECUTIVE SUMMARY

Thank you for your interest in Evoqua Water Technologies' new MEMCOR® MemPulse MBR system. Our MBR technology uses the latest advances in filtration and biological treatment in a combination specifically designed to create highly efficient aeration in conjunction with the absolute barrier of membrane filtration. The MEMCOR MBR has several key advantages over both conventional treatment processes and competitive MBR membrane systems.

MemPulse™ Air Scour System

- Evoqua's MemPulse MBR system was the first low-energy, high-efficiency aeration system to be introduced to the MBR marketplace, and our competition is still trying to catch up!
- MemPulse uses a simple device with no moving parts to randomly release pulses of high-energy air. MemPulse provides industry-leading cost-to-operate along with leading scour air effectiveness.

Advanced Process

- The Title 22 approved membranes enable effluent from the MEMCOR membranes to meet the most demanding effluent requirements and can be designed to meet stringent permit requirements or beneficial reuse such as urban irrigation, cooling tower make water or indirect reuse.
- Evoqua can provide a process warranty for the entire treatment process, ensuring compatibility between the biological process and membrane filtration system, and providing a single source of responsibility for any issues with the system.

Minimizing Maintenance Requirements

- MemPulse™ provides uniform distribution of mixed liquor and air across the entire membrane tank ensuring a consistent mixed liquor environment for each sub-module preventing preferential fouling of membranes.
- Separate membrane tanks adjacent to the biological tanks provides the ability to independently control the membrane environment and biological process operations, allowing flexibility in operation.

1-800-MEMCOR4

- MEMCOR's Global Service Organization allows us to provide, free of charge to our customers, 24/7 process support via our global MEMCOR helpline.
- If you call this number any time, day or night, you will be connected to a certified MEMCOR Process Technician with real answers to your process challenges.
- This service is available to you as long as you operate a MEMCOR plant at no additional cost.

Remote Monitoring

- Remote monitoring capability allows for real time analysis of critical system parameters to help troubleshoot and support local service people.
- Remote monitoring data logging system allows Evoqua process engineers to analyze system performance and optimize the system configuration for your specific application.

Modular Design/Small Footprint

- MEMCOR's modular design allows our MBR system to fit into nearly any size tank be it new, existing, or designed around competitive systems.
- Due to the elevated mixed liquor suspended solids up to 10,000mg/L, the biological volume required decreases by up to 70% when compared to secondary clarification.

Service Capabilities

Evoqua combines our in-depth system knowledge with our extensive company owned service organization to provide you with qualified local personnel that can manage the preventive and on-going service needs of the proposed MBR system. Our service programs are individually designed to meet the needs of each customer situation. Our service programs can be designed to provide any of the following services:

- Remote data analysis with actionable summary reports
- Completion of on-site membrane clean-in-place procedures
- Treatment system audits and membrane fiber analysis
- Completion of preventive maintenance and parts replacement

We would like to thank you again for your interest in Evoqua's line of MEMCOR Products. We believe that every MEMCOR product comes with more than just equipment – it includes the expansive knowledge of MEMCOR's dedicated team of membrane scientists, engineers, and technicians who stand behind every installation. We are eager to share this expertise with those responsible for providing the world with clean, consistent, and high-quality water.

Should you have any questions regarding this quotation, or would like to request any additional information please contact us the Technical Sales Manager or the Evoqua Regional Representative listed below.

Evoqua Water Technologies LLC:

Nick Lucas
Technical Sales Manager, MEMCOR Products
Telephone: 719-359-6195
Facsimile: 978-323-0854
Nicholas.Lucas@evoqua.com

Local Representative:

Dennis Emrie
MISCO Water
4500 Atherton Way
Albuquerque, NM 87120
Telephone: 505-898-8728
demrie@miscowater.com

TABLE OF CONTENTS

EXECUTIVE SUMMARY 2
MemPulse™ Air Scour System 2
Advanced Process 2
Minimizing Maintenance Requirements 2
1-800-MEMCOR4 2
Remote Monitoring 3
Modular Design/Small Footprint 3
Service Capabilities 3
1 Design Information 5
1.1 Influent flows 5
1.2 Influent Water Quality 5
1.3 Effluent Water Quality 5
2 Design Basis 6
2.1 System Design Basis 6
2.2 BioNutre™ Biological Design Information 7
2.2.1 Configuration Information 7
2.2.2 Biological Design Parameters 8
2.3 Membrane Operating System Design 8
2.3.1 Membrane System Operation 9
2.3.2 Membrane System Mixed Liquor Feed Requirements 9
2.3.3 Membrane System Air Scour Requirements 9
2.3.4 Maintaining Membrane Performance 9
2.3.5 Filtered Water Specification 10
3 MBR SCOPE OF SUPPLY 11
4 Project Overview 15
5 Evoqua Water Technologies LLC – Standard Terms of Sale 16
6 Extended Low Pressure Membrane Module Warranty 19

1 DESIGN INFORMATION

The proposed MBR system is sized to provide consistent filtrate quality based upon the hydraulic and feed water characteristics specified below.

1.1 Influent flows

Hydraulic Conditions	Value	Units
Average Daily Flow	1.0	Millions of gallons per day (MGD)

Note: The plant is not designed for peak flow conditions.

1.2 Influent Water Quality

Influent Water Quality	Value	Units
Biochemical Oxygen Demand (BOD5)	323	milligrams/liter (mg/L)
Chemical Oxygen Demand (COD)	*	mg/L
Total Suspended Solids (TSS)	215	mg/L
Ammonia Nitrogen (NH3-N)	25 (assumed)	mg/L
Total Kjeldahl Nitrogen (TKN)	42	mg/L
Total Phosphorus	9	mg/L
Alkalinity	350(assumed)	mg/L as CaCO3
Fats, Oils & Grease (FOG), Freon extractable	*	mg/L
Maximum Influent Temperature	*	degrees Celsius (°C)
Minimum Influent Temperature	15 (Assumed)	degrees Celsius (°C)

Notes:

(1) * Denotes a value which was not specified in the RFQ. All values must be confirmed for any associated process guarantee and membrane warranty.

1.3 Effluent Water Quality

Effluent Water Quality	Value	Units
BOD_5	<5	mg/L
Total Suspended Solids	<5	mg/L
Ammonia Nitrogen (NH3-N)	<1	mg/L
Total Nitrogen	<3	mg/L
Total Phosphorus	<1	mg/L
Turbidity	<1	NTU

2 DESIGN BASIS

2.1 System Design Basis

The Membrane Bioreactor (MBR) has been designed around the following parameters.

Design Parameter	Value
Membrane Pre-Screening	< 2.0 mm perforated System designed to prevent screen bypass under all conditions
Grit Removal	> 95 % of particles > 150 micron @ SG = 2.0 > 95 % of particles 100 micron, @ SG = 2.6 > 50 % of particles 100-150 micron @ SG = 2.6 Removal efficiency shall meet or exceed these values across a flow range of 25 - 100 % of PHF. System designed to prevent Grit removal bypass under all conditions
Raw Sewage	>90% Municipal
ML Capillary Suction Time (CST)	< 50 seconds
Sludge Retention Time (SRT)	10 days to 22 days
Raw Sewage: Fats, Oils and Greases (FOG) Hydrocarbons	 < 80 mg/L < 5 mg/L
MLSS Temperature Range	15 – 35° C
Site Elevation	~100 ft above MSL
Effluent Soluble BOD_5	< 5 mg/L
Effluent Ammonia	< 1.5 mg/L
Biological Mixed Liquor Suspended Solids (MLSS)	6,000 to 8,000 mg/L
Biological Seed Screening	Through membrane pre-screen or temporary screen of < 1 mm perforated plate or 0.75 mm mesh
Filtrate Pump and Pipework Design	> 9.5 PSI TMP
Bioreactor Foam / Scum Removal	Required Foam / scum removal to be carried out to control coverage to < 30 % of surface area
Bioreactor Waste Streams	WAS and grit dewatering system/s to achieve 95 % removal of > 50 um particles. Scum / Foam to be discharged to WAS dewatering system. Supernatant returned to the headworks prior to grit removal
CIP Waste Disposal	Return to influent balance tank

Notes

(1) Any additional requirement for neutralization to be decided during detailed design.

(2) If the wastewater alkalinity is less than the Table value, supplemental alkalinity may be required to ensure the pH does not inhibit bacterium growth.

(3) Inhibitory Matter and Heavy Metals must be less than the threshold limits (or within any ranges specified), as defined on page 227 of WPCF Manual of Practice No. 8, 1977 Edition (See Appendix II) The wastewater shall also be free of any substance toxic or inhibitory to the biological treatment process as determined by treatability

tests using Method 302B; OECD Guideline for Testing of Chemicals, Adopted 17 July 1992 or International Organization of Standardization, Evaluation of the Ultimate Aerobic Biodegradability of Organic Compounds, ISO/DIS 7827, IOS, Washington, D.C, 1983.

2.2 BioNutre™ Biological Design Information

The following sections outline the design basis for the biological system. The parameters detailed below are based on Average Daily flow conditions and the average wastewater concentrations outlined above in this proposal.

2.2.1 Configuration Information

The proposed biological system is designed with two trains each consisting of an anaerobic, an anoxic and an aerobic tank.

System Configuration	Trains
Number of Parallel Aeration Trains	2
Number of Tanks per train	4

The adjacent tanks use common intermediate walls with the following tank configuration. The proposed configuration of each train is:

Tank	Value	Units
Bioreactor		
Anaerobic volume per Train	21,500	Gal
Anoxic volume per train	40,000	Gal
Anoxic/Aerobic volume per train	40,000	Gal
Aerobic volume per train (Fine Bubble)	40,000	Gal
Post Anoxic volume per train	21,500	Gal
Total Bioreactor volume per train	163,000	Gal
Total Bioreactor volume Volume 2X 50%)	326,000	Gal
Total HRT	7.82	Hours

Tank	Total Quantity	Dimension/Train		
		Length (ft)	Width (ft)	SWD (ft)
Anaerobic	2	12	15	15.8
Anoxic	2	23	15	15.5
Anoxic/Aerobic	2	23	15	15.5
Aerobic (Fine Bubble)	2	23.8	15	15
Membrane Tank	2	13.85	8.9	10.42

2.2.2 Biological Design Parameters

The following design parameters were used as the basis of design for sizing the proposed biological system.

Design Parameters	Value	Units
Mixed Liquor Suspended Solids (MLSS)	8,000	mg/L
Aerobic Solids Retention Time (SRT)	9	d
Return Sludge Pumping Rate (MOS to Anoxic)	250	% of ADF
Return sludge pumping rate (Aeration tank to Anoxic)	300	% of ADF
Internal Recycle Rate (Anoxic to Anaerobic)	100	% of ADF
Sludge Produced @ 1% consistency	396	Gal/d
Aeration Blower capacity	4839	Lb/day
Aeration Blower capacity	1700	SCFM

2.3 Membrane Operating System Design

This section outlines the design basis for the MemPulse™ membrane system.

Design Criteria	Value for 1MGD	Value for 0.5MGD	Units
Module Type	B40N + MemPulse™	B40N + MemPulse™	-
Modules per Rack	16	16	Nos
Weight of Wet Rack Assembly[1]	1250	1250	lbs
Weight of Fouled Rack Assembly[1]	1800	1800	lbs
Total Number of Membrane Tanks	2	2	Nos
Number of Racks per Tank (installed)	7	3	Nos
Spare Racks Slots per Tank	0	4	Nos
No. of modules installed per Tank	112	48	Nos
Tank Weir Depth	8.3	8.3	ft

Notes:

(1) Weight provided includes weight of spreader bar.

2.3.1 Membrane System Operation

	ADF	ADF DURING 0.5MGD	UNITS
Flow Condition	1	0.5	MGD
No. of Membrane Tanks in Operation	2	2	—
No. of membrane Tanks in Standby	0	0	—
Net Flux	10.4	12.1	gfd

2.3.2 Membrane System Mixed Liquor Feed Requirements

The following table summarizes the mixed liquor feed flow during average and peak flow events. The feed flow requirements are based on maintaining a MLSS concentration below the maximum allowable concentration in the membrane tank.

PARAMETER	ADF	UNITS
Max MLSS in Membrane Tank	10,500	mg/L
Total Mixed Liquor Feed Flow Required	8,000	gpm

2.3.3 Membrane System Air Scour Requirements

The following table summarizes the air scour requirements during average and peak flow events.

PARAMETER	AVERAGE	UNITS
Air Flow per Tank: Installed Modules	322	SCFM (68°F)
Air Flow per Tank: Max Modules	380	SCFM (68°F)
Discharge pressure	4.6	psi

Notes:

(1) The actual annual air usage will be dependent upon the frequency and duration of any peak flow events. This is because the aeration flow/module on the Evoqua MemPulse™ is flux dependent.

(2) Units in short term storage (< 1 day and remaining in Mixed Liquor) must be aerated for 10 minutes every hour.

(3) Upon the provision of expected annual & daily flow pattern an annual air usage value can be calculated.

2.3.4 Maintaining Membrane Performance

The following table summarizes the maintenance procedures to ensure optimal performance of the MemPulse™ membrane system at average dry weather flow (ADWF).

Parameter	Relaxation	Maintenance Clean	Sodium Hypochlorite CIP	Citric Acid / Sulfuric Acid CIP
Interval Between Cycle	12 min	7 days	90 days	180 days
Cleaning Cycle Duration	60 sec	50 min	480 min	480 min

The expected chemical usage for Average Daily Flow (ADF), including design margin is:

PURPOSE	CHEMICAL	BULK CHEMICAL CONC.	REQ'D SOLUTION CONC.	BULK CHEMICAL PER CIP[1]	DESIGN FREQU-ENCY	USAGE@ ADF GAL/YR[1,2]
Chlorine Maintenance Clean	Sodium Hypochlorite	12.5% w/v Liquid	200 ppm	4 gal	7 days	390
Chlorine Clean-In-Place	Sodium Hypochlorite	12.5% w/v Liquid	1,000 ppm	50 gal	90 days	400
Citric Acid Clean-In-Place	Citric Acid	50.0% w/w Liquid	1% w/w Liquid	119 gal	180 days	483

Notes:

(1) Excludes chemicals for neutralization (if required).
(2) Based on continuous operation at ADF during the testing period.

2.3.5 Filtered Water Specification

The equipment offered will provide the following "Filtered Water" quality:

Parameter	Units	Quality (90 percentile)[1]	Quality (Maximum)[1]
Suspended Solids	mg/L	≤ 5	N/S
Turbidity	NTU	≤ 0.2	0.5
Bacteria[2]	Log Removal	≥ 4	N/A
Virus[2]	Log Removal	≥ 2.0	N/A

Notes:

(1) Sufficient samples to be taken such that two or more non-conforming results are required to demonstrate non-conformance.
(2) As measured by filtrate turbidity.

Please find the *MemPulse™ Membrane Bioreactor (MBR) System* brochure and *MEMCOR® B40N Membrane Filtration Module Specification* sheet attached with this proposal.

3 MBR SCOPE OF SUPPLY

The following equipment is included with the proposed scope of supply.

Biological Process Equipment

Qty.	Description
1	Fine bubble diffusers.
1	DO Probe.
2	Mounting Kits for Probes.
1	Controller for Probes.
3	Butterfly valves.
2	Blower discharge valves.
1	Blower discharge pressure transmitter.
2	Blowers.

Membrane Operating System Equipment

Qty.	Description
112	B40N membrane submodules fabricated of oxidant-resistant polyvinylidene fluoride (PVDF) membrane material.
112	MemPulse™ devices.
14	Rack assembly (16 module capacity) consisting of header assemblies, guide racks, mixing skirt, and air dropper tube.
1 Lot	Stainless Steel Cell kit for mounting racks.
3	Centrifugal filtrate suction pump controlled by Variable Frequency Drive. Two (2) duty and one (1) shelf spare.
3	Centrifugal mixed liquor RAS pump designed to return the mixed liquor from the membrane tanks. Two (2) duty and One (1) stand-by.
3	Centrifugal mixed liquor Internal RAS pump designed to return the mixed liquor from the membrane tanks. Two (2) duty and One (1) stand-by.
3	Positive displacement membrane air scour blower designed to meet average and peak air flow requirements. Two (2) duty and One (1) stand-by.
1 lot	Instrumentation integral to monitor and control the membrane system including level transmitters, level switches, flow meters, pressure transmitters, and pressure gauges.
2	Turbidimeter to measure the turbidity of the filtrate from each membrane tank.
1 lot	Valves required for equipment isolation and control of the membrane system including manual and automated valves with pneumatic actuators, check valves, and solenoid valves.
2	Filtrate air release systems.
1	Compressed air system to operate Evoqua supplied valves and leak testing with one air receiver and lead/lag rotary screw compressors.

CIP Chemical Dosing System Equipment

Qty.	Description
1	Sodium hypochlorite dosing system skid. Includes Two (2) dosing pumps and valves and instruments necessary for proper operation and calibration.
1	Citric acid dosing system skid. Includes One (1) dosing pump and valves and instruments necessary for proper operation and calibration.
1 lot	All valves and instruments necessary to monitor and control the CIP process, including: pneumatic valves, chemical injection quills, turbidimeter, pH probe analyzer, etc.

MBR Control System Equipment

Qty.	Description
1	Allen Bradley Compact Logix PLC.
1	Siemens touch screen Human Machine Interface (HMI) with compact flash data storage card.
1	Master Control Panel (MCP).
4	Slave Control Panels for O/I.
1	Remote monitoring system (i.e. Memlog). Includes modem, software, and hardware.
1 lot	Digital and Analog I/O (Input/Output) modules.

Engineering Support

In addition to the mechanical components, instruments, electrical components and control system supplied, the proposed MemPulse™ MBR will be supported by Evoqua Water Technologies' experienced engineering team. The following table details the personal support your MemPulse™ MBR project will receive.

Qty.	Description
3 copies	Standard MEMCOR MemPulse system submittal including: - Submittal Approval Form - Process Overview - Valve, Equipment and Instrumentation List - Manufacturer's Cut Sheets - Mechanical Drawings o Membrane System P&ID (showing Evoqua supplied equipment) o MBR Tank General Arrangement (including location of termination points) - I/O List - Electrical Bill of Materials - Electrical Drawings o Control Single Line o Three Phase Power Single Line o Field Interface Connections o Process Control Panel diagrams
3 copies	Operation and maintenance manuals are included. Manuals will be to Evoqua's commercial standards. This shall include detailed project specific manufacturer drawings, equipment, valves, instruments and pipe schedules. No drawings, except those used internally by consultant/customer are to be reproduced without the expressed, written permission of Evoqua.
1 Lot	Eight hour service-days for manufacturer's services at regular intervals during the project to ensure proper installation and assembly procedures are followed as well as commissioning and training of the MEMCOR MemPulse system. Additional services may be retained at MEMCOR scheduled rates of US$1650.00 per day, per person plus travel expenses at cost plus 5% mark up. The services included are: - On-site supervision that includes MEMCOR installation support and plant pre-commissioning, - On-site services for plant commissioning which includes startup, completion of functional test and initial performance test, Training of operators and technical staff in conjunction of startup. Training will include; equipment description, field instrumentation, control panels, detailed component description, preventive maintenance and troubleshooting.

Equipment and Services Provided by Others

All other works and equipment necessary to complete the project and not shown as being supplied by Evoqua shall be supplied by others, including but not limited to:

- Civil works and any and all building modifications or construction to house the MEMCOR membrane filtration system equipment including all concrete work related with construction, grouting of equipment and else as applicable.
- Unloading, unpacking, storage (according to Evoqua's recommendation), installation, assembly and field erection of the MEMCOR system.
- Interconnecting pipework between the MEMCOR units, between the MEMCOR units and the ancillary equipment (including air scour, compressed air, and chemical cleaning systems), between the MEMCOR units or ancillary equipment and equipment Supplied By Others and between the ancillary equipment.
- Pipe support including pipe hangers for all piping supplied outside the MEMCOR units.
- Pneumatic lines supplying air to the pneumatic actuators.
- Floor drains.
- Safety showers.
- Neutralization system to process the chemical cleaning waste prior to disposal (if applicable)
- Chemical transfer systems for services other than related to the chemical cleaning of the membrane modules, specifically coagulant transfer systems.
- Headworks Equipment (Grit removal and fine screen).
- Mixed liquor re-screening.
- Biological system c/w ancillary equipment.
- Effluent disinfection.
- Disposal system for rinse and CIP waste.
- Filtered water conditioning (if required) and storage.
- Waste activated sludge (WAS) equipment or solids handling system.
- Supply and storage of all chemicals required for MEMCOR membrane filtration system cleaning, maintenance, and/or operation.
- SCADA system.
- Supply and installation of all VFDs, motor control centers, and disconnects, unless otherwise specified.
- Supply and installation of all control wiring, power cabling including cabling tray, conduits, fittings and supports as necessary.
- Installation of control panels not mounted on the MEMCOR units.
- Building power, lighting, main disconnect, power distribution.
- Instrumentation not specifically listed in the MEMCOR scope as specified herein.
- Spare Parts.
- Pump alignment and vibration analysis.
- Lubricants.
- Engineering services other than listed in the MEMCOR scope above including structural or foundation design.
- Supervision of installation.
- Permits and approvals.
- Anchor bolt and anchor bolt calculations (if required by the Engineer) for all equipment supplied in the MEMCOR scope.
- Walkways, handrail, stairways and ladders as required.
- Grouting.

4 PROJECT OVERVIEW

The following table summarizes the contents of this quotation:

MEMCOR® Model:	2 x 112B40N
BioNutre Biological System	Biological Blowers
2 x 112B40N Modules	Filtrate and Air Headers
Filtrate Pumping System	RAS Pumping System
Clean-in-Place (CIP) System	Membrane System Blowers
Chemical Transfer System	Custom Tool Package
Compressed Air System	Manufacturing Services (Commissioning and Training)
O&M Manuals	Warranties
Budgetary Proposal Price for 1MGD:	**USD $1,875,000 (USD One Million Eight Hundred and Seventy Five Thousand only)**

Please note that the pricing above does not include insurance, bonds, or any applicable taxes.

The scope of supply and pricing are based on Evoqua's standard equipment selection, standard terms of sale and warranty terms as described herein. Any variations from these standards may affect this budgetary quotation. Additionally, please note that this budgetary quotation is for review and informational purposes only and does not constitute an offer for acceptance.

Payment Terms: *10% on Order, net 30*

15% on Engineering Submittals, staged submittals allowed, net 30

25% on Order of major rotating equipment, net 30

45% on Delivery, partial deliveries accepted, net 30

5% on Start-up, net 30

Full payment not to exceed 120 days after shipment

Freight: *F.O.B. shipping point, with freight prepaid to the jobsite.*

Shipments: *Estimated 26 weeks after receipt of full information and approved drawings when required.*

Drawings: *Three (3) sets of submittal drawings, if required, will be issued approximately 12 weeks after receipt and approval of purchase order.*

Manuals: *Three (3) copies of English language owner's manuals are included. Additional manuals will cost $150 each.*

5 EVOQUA WATER TECHNOLOGIES LLC – STANDARD TERMS OF SALE

1. Applicable Terms. These terms govern the purchase and sale of equipment, products, related services, leased products, and media goods if any (collectively herein "Work"), referred to in Seller's proposal ("Seller's Documentation"). Whether these terms are included in an offer or an acceptance by Seller, such offer or acceptance is expressly conditioned on Buyer's assent to these terms. Seller rejects all additional or different terms in any of Buyer's forms or documents.

2. Payment. Buyer shall pay Seller the full purchase price as set forth in Seller's Documentation. Unless Seller's Documentation specifically provides otherwise, freight, storage, insurance and all taxes, levies, duties, tariffs, permits or license fees or other governmental charges relating to the Work or any incremental increases thereto shall be paid by Buyer. If Seller is required to pay any such charges, Buyer shall immediately reimburse Seller. If Buyer claims a tax or other exemption or direct payment permit, it shall provide Seller with a valid exemption certificate or permit and indemnify, defend and hold Seller harmless from any taxes, costs and penalties arising out of same. All payments are due within 30 days after receipt of invoice. Buyer shall be charged the lower of 1 ½% interest per month or the maximum legal rate on all amounts not received by the due date and shall pay all of Seller's reasonable costs (including attorneys' fees) of collecting amounts due but unpaid. All orders are subject to credit approval by Seller. Back charges without Seller's prior written approval shall not be accepted.

3. Delivery. Delivery of the Work shall be in material compliance with the schedule in Seller's Documentation. Unless Seller's Documentation provides otherwise, delivery terms are ExWorks Seller's factory (Incoterms 2010). Title to all Work shall pass upon receipt of payment for the Work under the respective invoice. Unless otherwise agreed to in writing by Seller, shipping dates are approximate only and Seller shall not be liable for any loss or expense (consequential or otherwise) incurred by Buyer or Buyer's customer if Seller fails to meet the specified delivery schedule.

4. Ownership of Materials and Licenses. All devices, designs (including drawings, plans and specifications), estimates, prices, notes, electronic data, software and other documents or information prepared or disclosed by Seller, and all related intellectual property rights, shall remain Seller's property. Seller grants Buyer a non-exclusive, non-transferable license to use any such material solely for Buyer's use of the Work. Buyer shall not disclose any such material to third parties without Seller's prior written consent. Buyer grants Seller a non-exclusive, non-transferable license to use Buyer's name and logo for marketing purposes, including but not limited to, press releases, marketing and promotional materials, and web site content.

5. Changes. Neither party shall implement any changes in the scope of Work described in Seller's Documentation without a mutually agreed upon change order. Any change to the scope of the Work, delivery schedule for the Work, any Force Majeure Event, any law, rule, regulation, order, code, standard or requirement which requires any change hereunder shall entitle Seller to an equitable adjustment in the price and time of performance.

6. Force Majeure Event. Neither Buyer nor Seller shall have any liability for any breach or delay (except for breach of payment obligations) caused by a Force Majeure Event. If a Force Majeure Event exceeds six (6) months in duration, the Seller shall have the right to terminate the Agreement without liability, upon fifteen (15) days written notice to Buyer, and shall be entitled to payment for work performed prior to the date of termination. "Force Majeure Event" shall mean events or circumstances that are beyond the affected party's control and could not reasonably have been easily avoided or overcome by the affected party and are not substantially attributable to the other party. Force Majeure Event may include, but is not limited to, the following circumstances or events: war, act of foreign enemies, terrorism, riot, strike, or lockout by persons other than by Seller or its sub-suppliers, natural catastrophes or (with respect to on-site work), unusual weather conditions.

7. Warranty. Subject to the following sentence, Seller warrants to Buyer that the (i) Work shall materially conform to the description in Seller's Documentation and shall be free from defects in material and workmanship and (ii) the Services shall be performed in a timely and workmanlike manner. Determination of suitability of treated water for any use by Buyer shall be the sole and exclusive responsibility of Buyer. The foregoing warranty shall not apply to any Work that is specified or otherwise demanded by Buyer and is not manufactured or selected by Seller, as to which (i) Seller hereby assigns to Buyer, to the extent assignable, any warranties made to Seller and (ii) Seller shall have no other liability to Buyer under warranty, tort or any other legal theory. The Seller warrants the Work, or any components thereof, through the earlier of (i) eighteen (18) months from delivery of the Work or (ii) twelve (12) months from initial operation of the Work or ninety (90) days from the performance of services (the "Warranty Period"). If Buyer gives Seller prompt written notice of breach of this warranty within the Warranty Period, Seller shall, at its sole option and as Buyer's sole and exclusive remedy, repair or replace the subject parts, re-perform the Service or refund the purchase price. Unless otherwise agreed to in writing by Seller, (i) Buyer shall be responsible for any labor required to gain access to the Work so that Seller can assess the available remedies and (ii) Buyer shall be responsible for all costs of installation of repaired or replaced Work. If Seller determines that any claimed breach is not, in fact, covered by this warranty, Buyer shall pay Seller its then customary charges for any repair or replacement made by Seller. Seller's warranty is conditioned on Buyer's (a) operating and maintaining the Work in accordance with Seller's instructions, (b) not making any

unauthorized repairs or alterations, and (c) not being in default of any payment obligation to Seller. Seller's warranty does not cover (i) damage caused by chemical action or abrasive material, misuse or improper installation (unless installed by Seller) and (ii) media goods (such as, but not limited to, resin, membranes, or granular activated carbon media) once media goods are installed. THE WARRANTIES SET FORTH IN THIS SECTION 7 AND THE WARRANTY SET FOR IN THE "EXTENDED LOW PRESSURE MEMBRANE MODULE WARRANTY" SECTION OF EVOQUA'S PROPOSAL ARE THE SELLER'S SOLE AND EXCLUSIVE WARRANTIES AND ARE SUBJECT TO THE LIMITATION OF LIABILITY PROVISION BELOW. SELLER MAKES NO OTHER WARRANTIES OF ANY KIND, EXPRESS OR IMPLIED, INCLUDING WITHOUT LIMITATION, ANY WARRANTY OF MERCHANTABILITY OR FITNESS FOR PURPOSE.

8. **Indemnity.** Seller shall indemnify, defend and hold Buyer harmless from any claim, cause of action or liability incurred by Buyer as a result of third party claims for personal injury, death or damage to tangible property, to the extent caused by Seller's negligence. Seller shall have the sole authority to direct the defense of and settle any indemnified claim. Seller's indemnification is conditioned on Buyer (a) promptly, within the Warranty Period, notifying Seller of any claim, and (b) providing reasonable cooperation in the defense of any claim.

9. **Assignment.** Neither party may assign this Agreement, in whole or in part, nor any rights or obligations hereunder without the prior written consent of the other party; provided, however, the Seller may assign its rights and obligations under these terms to its affiliates or in connection with the sale or transfer of the Seller's business and Seller may grant a security interest in the Agreement and/or assign proceeds of the agreement without Buyer's consent.

10. **Termination.** Either party may terminate this agreement, upon issuance of a written notice of breach and a thirty (30) day cure period, for a material breach (including but not limited to, filing of bankruptcy, or failure to fulfill the material obligations of this agreement). If Buyer suspends an order without a change order for ninety (90) or more days, Seller may thereafter terminate this Agreement without liability, upon fifteen (15) days written notice to Buyer, and shall be entitled to payment for work performed, whether delivered or undelivered, prior to the date of termination.

11. **Dispute Resolution.** Seller and Buyer shall negotiate in good faith to resolve any dispute relating hereto. If, despite good faith efforts, the parties are unable to resolve a dispute or claim arising out of or relating to this Agreement or its breach, termination, enforcement, interpretation or validity, the parties will first seek to agree on a forum for mediation to be held in a mutually agreeable site. If the parties are unable to resolve the dispute through mediation, then *any dispute, claim or controversy arising out of or relating to this Agreement or the breach, termination, enforcement, interpretation or validity thereof, including the determination of the scope or applicability of this agreement to arbitrate, shall be determined by arbitration in Pittsburgh, Pennsylvania before three arbitrators* who are lawyers experienced in the discipline that is the subject of the dispute and shall be jointly selected by Seller and Buyer. *The arbitration shall be administered by JAMS pursuant to its Comprehensive Arbitration Rules and Procedures. The Arbitrators shall issue a reasoned decision* of a majority of the arbitrators, which shall be the decision of the panel. Judgment may be entered upon the arbitrators' decision in any court of competent jurisdiction. The substantially prevailing party as determined by the arbitrators shall be reimbursed by the other party for all costs, expenses and charges, including without limitation reasonable attorneys' fees, incurred by the prevailing party in connection with the arbitration. For any order shipped outside of the United States, any dispute shall be referred to and finally determined by the International Center for Dispute Resolution in accordance with the provisions of its International Arbitration Rules, enforceable under the New York Convention (Convention on the Recognition and Enforcement of Foreign Arbitral Awards) and the governing language shall be English.

12. **Export Compliance.** Buyer acknowledges that Seller is required to comply with applicable export laws and regulations relating to the sale, exportation, transfer, assignment, disposal and usage of the Work provided under this Agreement, including any export license requirements. Buyer agrees that such Work shall not at any time directly or indirectly be used, exported, sold, transferred, assigned or otherwise disposed of in a manner which will result in non-compliance with such applicable export laws and regulations. It shall be a condition of the continuing performance by Seller of its obligations hereunder that compliance with such export laws and regulations be maintained at all times. BUYER AGREES TO INDEMNIFY AND HOLD SELLER HARMLESS FROM ANY AND ALL COSTS, LIABILITIES, PENALTIES, SANCTIONS AND FINES RELATED TO NON-COMPLIANCE WITH APPLICABLE EXPORT LAWS AND REGULATIONS.

13. **LIMITATION OF LIABILITY.** NOTWITHSTANDING ANYTHING ELSE TO THE CONTRARY, SELLER SHALL NOT BE LIABLE FOR ANY CONSEQUENTIAL, INCIDENTAL, SPECIAL, PUNITIVE OR OTHER INDIRECT DAMAGES, AND SELLER'S TOTAL LIABILITY ARISING AT ANY TIME FROM THE SALE OR USE OF THE WORK, INCLUDING WITHOUT LIMITATION ANY LIABILITY FOR ALL WARRANTY CLAIMS OR FOR ANY BREACH OR FAILURE TO PERFORM ANY OBLIGATION UNDER THE CONTRACT, SHALL NOT EXCEED THE PURCHASE PRICE PAID FOR THE WORK. THESE LIMITATIONS APPLY WHETHER THE LIABILITY IS BASED ON CONTRACT, TORT, STRICT LIABILITY OR ANY OTHER THEORY.

14. **Rental Equipment / Services.** Any leased or rented equipment ("Leased Equipment") provided by Seller shall at all times be the property of Seller with the exception of certain miscellaneous installation materials purchased by the Buyer, and no right or property interest is transferred to the Buyer, except the right to use any such Leased Equipment as provided herein. Buyer agrees that it shall not pledge, lend, or create a security interest in, part with possession of, or relocate the Leased Equipment. Buyer shall be responsible to maintain the Leased Equipment in good and efficient working order. At the end of the initial term specified in the order, the terms shall automatically renew for the identical period unless canceled in writing by Buyer or Seller not sooner than three (3) months nor later than one (1) month from termination of the initial order or any renewal terms. Upon any renewal, Seller shall have the right to issue notice of increased pricing which shall be effective for any renewed terms unless Buyer objects in writing within fifteen (15) days of issuance of said notice. If Buyer timely cancels service in writing prior to the end of the initial or any renewal term this shall not relieve Buyer of its obligations under the order for the monthly rental service charge which shall continue to be due and owing. Upon the expiration or termination of this Agreement, Buyer shall promptly make any Leased Equipment available to Seller for removal. Buyer hereby agrees that it shall grant Seller access to the Leased Equipment location and shall permit Seller to take possession of and remove the Leased Equipment without resort to legal process and hereby releases Seller from any claim or right of action for trespass or damages caused by reason of such entry and removal.

15. **Miscellaneous.** These terms, together with any Contract Documents issued or signed by the Seller, comprise the complete and exclusive statement of the agreement between the parties (the "Agreement") and supersede any terms contained in Buyer's documents, unless separately signed by Seller. No part of the Agreement may be changed or cancelled except by a written document signed by Seller and Buyer. No course of dealing or performance, usage of trade or failure to enforce any term shall be used to modify the Agreement. To the extent the Agreement is considered a subcontract under Buyer's prime contract with an agency of the United States government, in case of Federal Acquisition Regulations (FARs) flow down terms, Seller will be in compliance with Section 44.403 of the FAR relating to commercial items and those additional clauses as specifically listed in 52.244-6, Subcontracts for Commercial Items (OCT 2014). If any of these terms is unenforceable, such term shall be limited only to the extent necessary to make it enforceable, and all other terms shall remain in full force and effect. The Agreement shall be governed by the laws of the Commonwealth of Pennsylvania without regard to its conflict of laws provisions. Both Buyer and Seller reject the applicability of the United Nations Convention on Contracts for the international sales of goods to the relationship between the parties and to all transactions arising from said relationship.

6 EXTENDED LOW PRESSURE MEMBRANE MODULE WARRANTY

1. Term of the Membrane Module Warranty

   a. This Warranty shall commence ("Commencement Date") on the earlier of:

      i) wet start up of the equipment, or
      ii) 6 months after the delivery of the membrane modules to the Owner.

   b. This Warranty shall continue for a period of five (5) years from the Commencement Date (the "Module Warranty Period").

2. Repair and Replacement Conditions

   a. In the event an individual membrane module(s) exhibits defects in material or workmanship, as defined in Paragraph 2.b. below, the Seller shall, at its sole option and as the Owner's sole remedy, conduct either of the following:

      i) Repair the membrane module at no cost to Owner; or
      ii) Provide replacement membrane modules per the warranty replacement schedule listed in Paragraph 5 below.

   b. Membrane modules shall be deemed to be exhibiting defects in material or workmanship under the following conditions:

      i) If the membrane module(s) fails Seller's standard integrity test for MBR and cannot be repaired by the Owner; or
      ii) If the membrane module(s) fail to meet the filtrate flow capacity, as outlined in the Design Basis in the Contract Documents; or
      iii) If the membrane module(s) cause the system to exceed the effluent turbidity and/or total suspended solids requirements for this project, as outlined in the Design Basis in the Contract Documents.

   c. Owner will return to Seller the end of each membrane module with the serial number to qualify for a replacement module.

3. Membrane Module Warranty Exclusions: The Owner recognizes that damage resulting from any of the following shall be excluded from coverage under the low pressure membrane module warranty:

   a. Any person other than an employee or representative of Seller has altered the membrane operating system without prior written approval by Seller;

   b. OWNER causing or permitting the membrane modules to dry or to have moisture content below that specified in the operating instructions either during storage or operation. Shutdown, storage, maintenance and start-up procedures of membranes must be as specified in the Operation & Maintenance Manual;

   c. Mixed liquor suspended solids concentration exceeding a maximum of 14,500 mg/L in the membrane tank:

   d. Unusual plant upsets, presence of other potential transients or other undefined operating conditions that can affect membrane performance or life. This includes but is not limited to polymer "dumps", fats, oil and grease content in excess of 100 mg/L entering the biological system, the use, malfunction or by-pass of any equipment which allows the accumulation of non-biodegradable material in the membrane tanks, any

bypass of the pre-screen ahead of the aeration basins and/or basket strainers on the membrane tank inlet, rags or debris that fall into the biological or membrane tanks, toxic wastes entering the plant that upset the biological process;

e. Any damage/defect caused by chemical or physical conditions such as (but not limited to) pH, temperature, chemicals, effluent COD is greater than 50 mg/L or climatic factors outside the recommended operating parameters in the appropriate section of the Operation & Maintenance Manual;

f. Any damage directly or indirectly related to PLC and/or HMI/SCADA modifications without Seller's express written consent.

g. Improper maintenance or operation of equipment (including failure to perform periodic chemical cleans) as defined in Seller supplied operating and maintenance manual.

h. Neutralization and/or reduction of chemical cleaning solutions are performed in the membrane tank without written authorization from Seller;

i. Supply of influent water exhibiting parameters inconsistent with the parameters determined or specified at time of bid and/or pilot testing.

j. Sludge retention time (SRT) is:
   - less than 4 days over a 2-day history; or
   - less than as determined by the equation below over any 30-day period:

     $SRT = 12 / 1.029^{(T-20)}$

     Where: SRT = minimum SRT for biological process (average for any 30-day period)

     T = wastewater temperature (°C); or
   - greater than 80 days over a 30-day period.

4. Warranty Conditions: This warranty is conditioned upon Owner:

   a. Not being in default of any payment obligations to Seller; and

   b. Maintaining hand-written or electronic operational logs and providing such logs to Seller in the event of a warranty claim.

   c. Unless the capillary suction time (CST) is less than 20 seconds for mixed liquor before the membrane tank, the CST method should be as defined in Standard Methods for the Examination of Wastewater Treatment (latest edition), except that a 10-mm diameter stainless steel reservoir should be utilized rather than an 18-mm diameter.

5. Warranty Replacement Schedule

   a. **First 12 Months:** If a membrane module shall require replacement under the repair and replacement conditions described in section 2 above during the first twelve (12) months of the "Module Warranty Period", a replacement will be supplied by Seller at no charge.

   b. **Next 84 Months:** If a low pressure membrane module shall require replacement under the repair and replacement conditions described in section 2 above during the next eighty-four (84) months of the Module Warranty Period, a replacement will be supplied by Seller and invoiced based upon a pro-rata value of a

total of ninety-six (96) months. The pro-rata value shall be determined using a replacement price of US$1,400.00 per module adjusted by the increase in the North American Consumer Price Index (CPI) All Urban Consumers (US City Average), and reducing this price by 1/60th for each month remaining in the 60-month period.

c. Replacement modules supplied by the Seller to Owner under warranty shall assume the balance of the membrane module warranty that remained on the defective membrane module that was replaced under warranty.

d. Freight costs associated with the furnishing of replacement modules provided under the membrane module warranty is not included in the warranty replacement price. Accordingly, the shipping/delivery terms for replacement modules supplied under the membrane module warranty shall be "Ex Works Seller's Facility" and Seller shall arrange, and Owner shall pay for, transportation of replacement membrane modules to Owner's facility.

6. IN NO EVENT SHALL SELLER BE LIABLE FOR ANY INDIRECT, CONSEQUENTIAL, INCIDENTAL, SPECIAL, PUNITIVE OR OTHER DAMAGES AND SELLER'S TOTAL LIABILITY UNDER THIS MEMBRANE MODULE WARRANTY, WHEN ADDED TO ALL LIABILITY OF SELLER TO THE OWNER AND ANY END USER OF THE SYSTEM, IF DIFFERENT FROM THE OWNER, UNDER THE SYSTEM SALE CONTRACT, SHALL NOT EXCEED THE LIMITATION ON LIABILITY SET FORTH IN THE SYSTEM SALE CONTRACT. THE FOREGOING LIMITATIONS APPLY REGARDLESS OF WHETHER THE LIABILITIES OR DAMAGES ARISE OR ARE ALLEGED TO ARISE UNDER CONTRACT, TORT, STRICT LIABILITY OR ANY OTHER THEORY. The Warranty is expressly excluded from any performance bond(s) which may be furnished by the Seller.

Project Name: Santa Fe County, NM
Prepared For: Edward Dubois - HDR
Date: December 7, 2016
GE Contact: Grant MacInnis, Regional Manager (Grant.MacInnis@ge.com)

The ZeeWeed® Membrane Bioreactor Process

The ZeeWeed® Membrane Bioreactor (MBR) process consists of a suspended growth biological reactor integrated with a membrane filtration system, using the ZeeWeed® hollow fiber ultrafiltration membrane. The membrane filtration system essentially replaces the solids separation function of secondary clarifiers and sand filters used in a conventional activated sludge process.

ZeeWeed® ultrafiltration membranes are immersed, in direct contact with mixed liquor. Through the use of a permeate pump, a vacuum is applied to a header connected to the membranes. The vacuum draws the treated water through the hollow fiber membranes. Permeate is then directed to downstream disinfection or discharge facilities. Air, in the form of large bubbles, is introduced below the bottom of the membrane modules, producing turbulence that scours the outer surface of the hollow fibers to keep them clean.

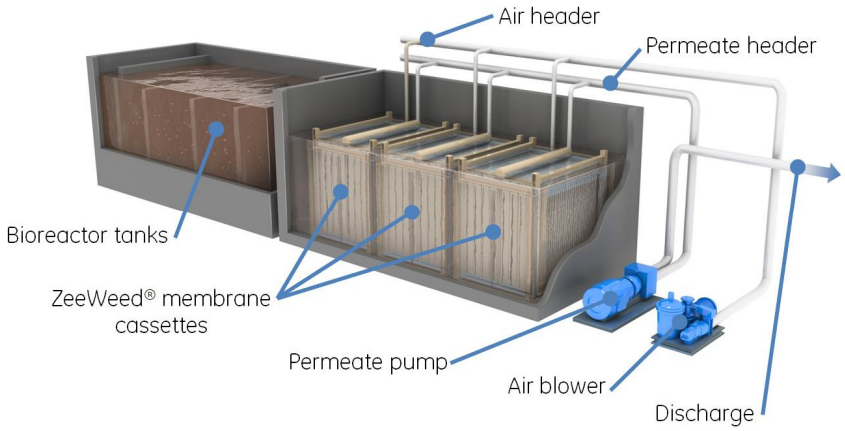

The proposed MBR design includes LEAPmbr, GE's latest technology advancement for wastewater treatment, which offers the lowest cost of ownership in the industry. LEAPmbr incorporates several innovations, including the latest ZeeWeed® 500 module with increased membrane surface area, increased productivity through proven MBR design flux improvements, an optimized membrane tank design, along with a more efficient membrane aeration system (known as LEAPmbr Aeration Technology) that simplifies the aeration system and reduces aeration requirements. These innovations combine to offer:

- 15% productivity improvement
- 20% footprint reduction
- 50% reduction in membrane aeration equipment
- 30% energy savings

Scope of Supply by GE

- ZeeWeed® 500 Membrane Cassettes and Modules
- Bioreactor equipment – aerators, mixers, process air blowers, etc.
- Permeate and Air Scour Header Piping
- Permeate and Backpulse Pumps
- Backpulse Tank
- Membrane Air Scour Blowers
- Membrane Cleaning System
- Electrical and Control Equipment
- Compressed Air System
- Instrumentation Integral to ZeeWeed® System
- Electrical and Mechanical Engineering Submittals
- Operation & Maintenance Manuals
- Installation, Commissioning & Start-up Assistance
- Operator Training

Scope of Supply by Others

- Concrete and civil work, assembly of loose-ship equipment, interconnecting piping, balance of plant design and construction, etc.

Design Assumptions:

Assumed Temperature	15	Deg C
MMF	0.5	MGD

Ultrafiltration System Design

The ultrafiltration design of this system is described in the table below where membrane modules are assembled into cassettes and cassettes are installed in concrete tanks.

Type of Membrane	ZeeWeed® 500d
Number of Trains	2
Number of Cassette Spaces per Train	1
Type of Module	370 ft2
Membrane Tank Dimensions (each)	8'5" x 9' x 13'H

Option 1 – TN < 10 – MLE Design

Pre-Anoxic Volume	25,000 gal
Aerobic Volume	125,000 gal

Budgetary Price for the System Described Above **USD $ 550,000**

Option 2 – TN < 6.9, TP < 3.1 – MLE Design with a 2nd recycle and coagulant trimming

Pre-Anoxic Volume	38,000 gal
Aerobic Volume	165,000 gal

ZeeWeed® Membrane Bioreactor System Pricing

Budgetary Price for the System Described Above **USD $ 590,000**

Option 3 – TN < 3, TP < 1 – Pre-Anox / Aerobic / Post Anox with a 2nd recycle and coagulant trimming

Pre-Anoxic Volume	25,000 gal
Aerobic Volume	195,000 gal
Post-anoxic Volume	17,000 gal

ZeeWeed® Membrane Bioreactor System Pricing

Budgetary Price for the System Described Above **USD $ 630,000**

For Earth, For Life

Kubota

Budgetary Proposal for

Santa Fe County

Quill WWTF

New Mexico

Membrane Bioreactor System

December 09, 2016

Prepared By:

Kubota Membrane USA
11807 North Creek Parkway S, Suite B-109
Bothell, WA 98011
425-898-2858

Local Representation By:

Goble Sampson Associates
Josh Ziembiec
480-271-0519
jziembiec@goblesampson.com

December 09, 2016

For Earth, For Life
Kubota

HDR
Attn: Ed DuBois, PE
2155 Louisian Blvd NE
Suite 9500
Albuquerque, NM 87110

Dear Mr. Ed DuBois:

I am pleased to present the attached materials for consideration regarding the proposed Kubota membrane bioreactor (MBR) system for the Quill WWTF project in Santa Fe County, NM. Kubota Membrane USA is a company with a strong history in the U.S., backed by Kubota Corporation's extensive wastewater experience worldwide. Our Kubota MBR System brings unique features to save your client time and hassle. Most importantly, our product saves money over the life-cycle of the treatment system because of our high quality membrane.

A compelling feature of the Kubota MBR System is the simplicity of daily operations and periodical maintenance. Both the membrane unit itself and the MBR system are designed for the operator's convenience. Cleaning is performed in place, with no routine membrane unit removal required. Also, because the Kubota MBR System uses a flat sheet membrane, it offers straightforward troubleshooting and easy replacement in the unlikely event that problems arise.

Kubota Membrane USA offers first class service. Our technicians have operational experience and are well trained in wastewater analysis and membrane inspection. This sets us apart from other membrane manufacturers who do not design, build, or operate treatment plants, and system integrators who do not manufacture parts or operate plants. We are responsive to operator concerns and knowledgeable about the Kubota MBR System from top to bottom.

With the Kubota name comes a long history of excellence in MBR wastewater treatment. We are happy to put you in touch with operators and engineers who can share their experience with our product. If you have any questions regarding our proposal, please feel free to contact us or our local representative, Josh Ziembiec of Goble Sampson Associates, at 480-271-0519 or jziembiec@goblesampson.com.

Best regards,

Kenna Foster
Application Engineer | Kubota Membrane USA Corporation
Office: 425-898-2858 ext. 108
Cell: 425-686-2705
Email: kenna.foster@kubota.com

Table of Contents

1 Introduction 1

2 Company Background 1

2.1 History 1

2.2 Design Support and After-Sales Service 2

2.3 Kubota's Experience 3

3 Technology Description 3

3.1 Membrane Product Information 3

3.2 MBR Process Description 5

3.3 Operation and Maintenance 5

4 Design Overview 7

4.1 Influent Design Flow 7

4.2 MBR Specifications 7

4.3 Preliminary Layout – Option A 8

4.4 Preliminary Layout – Option B 9

4.5 Operation and Maintenance Estimates 10

5 Scope of Supply 11

5.1 Major Equipment and Instrumentation – Option A 11

5.2 Major Equipment and Instrumentation – Option B 12

5.3 Direct Services 14

5.4 Exclusions to Kubota Scope of Supply 15

6 Warranty 15

7 Budgetary Price 15

8 24/7 Technical Support (Always Free of Charge) 16

9 Additional Services (Optional) 16

Tables

Table 1: Kubota Submerged Membrane Unit installations worldwide as of December 2015 3
Table 2: Design Flow Conditions 7
Table 3: Influent and Effluent Characteristics 7
Table 4: Membrane Equipment Specifications 8
Table 5: Option A – Tank Dimensions and Hydraulic Retention Times for Phase 1 (0.5 MGD) 9
Table 6: Option B – Tank Dimensions and Hydraulic Retention Times for Phase 1 (0.5 MGD) 10
Table 7: Design Flow Conditions 10
Table 8: Option A Major Equipment and Instrumentation in Kubota's Scope of Supply 11
Table 9: Option B Major Equipment and Instrumentation in Kubota's Scope of Supply 12
Table 10: Training and Workshops Included in Kubota's Scope of Supply 14
Table 11: Budgetary Price for Proposed Kubota MBR Equipment and Equipment 15
Table 12: Kubota's Available Services 16

Figures

Figure 1: Progression of the Kubota membrane, from the tubular type to the most recent SP600 1
Figure 2: Examples of Kubota Design Support Capabilities 2
Figure 3: Kubota's Experienced and Knowledgeable Service and Support Team 2
Figure 5: Membrane Module Structure (left), and SP Series Unit Structure (right)) 4
Figure 4: Kubota SP300 (left), and SP600 (right) 4
Figure 6: Typical CAS Process (top) vs. Kubota MBR Process (bottom) 5
Figure 7: Skid-Mounted Clean-In-Place System 6
Figure 8: Chemical Cleaning for Other Manufacturers (left) vs. Kubota Membrane Units (right) 6
Figure 9: Option A Process Flow Diagram 8
Figure 10: Option A Tank Layout 9
Figure 11: Option B Process Flow Diagram 9
Figure 12: Option B Tank Layout 10

1 Introduction

In response to the membrane bioreactor (MBR) information requested for the Santa Fe County Quill WWTF, we have prepared a budgetary proposal for your review. We have included two options: Option A will treat provide effluent that meets NPDES Tier 1 requirements, and Option B will provide effluent that meets NPDES Tier 2 requirements.

2 Company Background

2.1 History

Kubota Corporation has been designing and building wastewater treatment plants since the early 1960s. Long before building wastewater treatment plants, the company became involved with water engineering projects in 1893 as a manufacturer of iron piping, which was used for clean water distribution. As the largest engineering contractor for wastewater treatment plants in Japan, Kubota has the capability to design, build and operate municipal and industrial wastewater treatment plants.

In the 1980s, Kubota developed its own MBR technology using an external tubular type of ultrafiltration membrane. After the initial installation of these membranes in a soil treatment plant in Japan, Kubota realized these membranes lacked energy efficiency, had short life spans, and required frequent maintenance. This prompted Kubota to find an alternative to the external tubular membranes. In 1989, Kubota pioneered the energy-efficient, long-lasting, and easy-to-use flat sheet membrane with its Submerged Membrane Unit. Kubota's Submerged Membrane Unit was designed specifically for wastewater treatment applications, and is currently installed in wastewater treatment plants around the world, making Kubota a leader in the flat sheet MBR technology market.

The first installation of the Kubota flat sheet Submerged Membrane Unit was for a mechanical tool equipment manufacturer in Hiroshima in 1990. Kubota has refined and improved the membrane product for over 25 years (*Figure 1*). Kubota membranes were first introduced to the U.S. in 2002. Today, MBR systems using the Kubota membrane have been installed all over the world for numerous applications in addition to sewage treatment, such as brewery, dairy, food processing, pharmaceutical and chemical, laundry, leachate, and electrical industry wastes, as well as for sludge liquor treatment and water reuse.

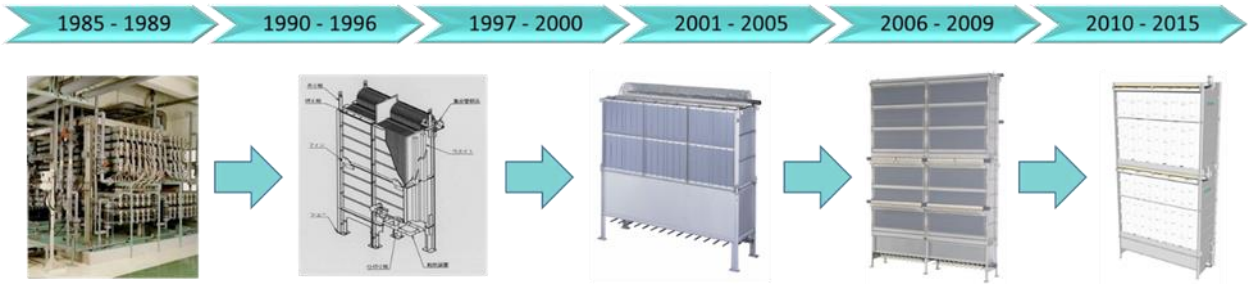

Figure 1: Progression of the Kubota membrane, from the tubular type to the most recent SP600

Kubota Membrane USA Corporation 2016
This document is the property of KUBOTA Corporation. This document may not be duplicated and/or published without prior written consent of the owner.

2.2 Design Support and After-Sales Service

Kubota Membrane USA has technical staff in Washington State and Ohio who can help the customer with any design or operational needs of this project. Kubota staff members are available to provide technical support to consulting engineers, WWTP operators, and WWTP owners.

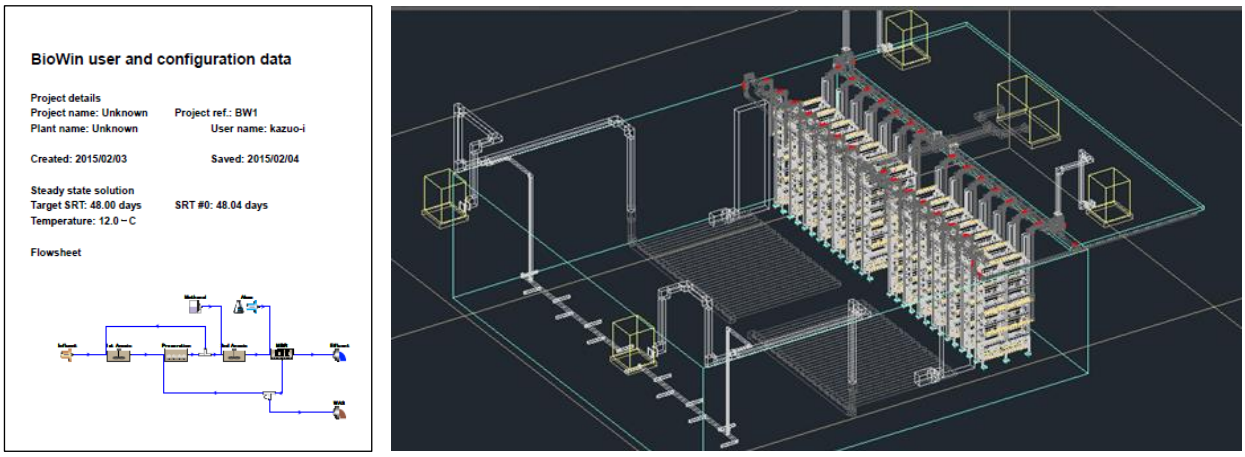

Figure 2: Examples of Kubota Design Support Capabilities

Kubota provides a staff on a regular basis for service and support of construction activities and throughout the warranty period. The service provided includes delivery inspection, installation certification, training, commissioning and ongoing technical support. Kubota will also provide operation and maintenance (O&M) manuals and 24/7 customer support.

Figure 3: Kubota's Experienced and Knowledgeable Service and Support Team

Kubota Membrane USA Corporation 2016
This document is the property of KUBOTA Corporation. This document may not be duplicated and/or published without prior written consent of the owner.

Kubota Industrial Equipment in the state of Georgia has five certified operators who operate the industrial MBR system for the factory's wastewater. Additionally, Kubota has a Research and Development Center in Canton, OH, which focuses on optimizing the design and performance of Kubota membrane systems for the North American market.

2.3 Kubota's Experience

Kubota has extensive experience in all facets of an MBR system project including designing, building, and operating MBR systems. Kubota has over 300 Design-Build projects, operates over 30 plants, and has over 150 maintenance contracts. Kubota also designed, operates, and maintains the 80,000 GPD MBR treatment facility for the Kubota Tractor Factory in Georgia, USA.

As of December 2015, Kubota MBR systems have been installed at over 5,300 facilities worldwide, making Kubota the top supplier in the world. Even prior to the first U.S. MBR installations, Kubota had already been designing, building, and operating MBR systems around the world for many years.

Table 1: Kubota Submerged Membrane Unit installations worldwide as of December 2015

Region	Number of Installations
North America	378
Europe & Africa	564
Middle East	76
Asia (Except Japan) & Oceania	510
Japan	3,863
Total MBR Plants	**5,391**

3 Technology Description

3.1 Membrane Product Information

For the Quill WWTF, we are proposing to Kubota's SP Series of Submerged Membrane Units. The SP Series, developed in 2011, improves energy efficiency and reduces assembly time while still maintaining the reliable and simple operation that is characteristic of Kubota's MBR systems. Kubota's philosophy of learning from our extensive experience is one of our greatest advantages, setting us apart from more newly developed membrane manufacturers.

Kubota Membrane USA Corporation 2016
This document is the property of KUBOTA Corporation. This document may not be duplicated and/or published without prior written consent of the owner.

Figure 5: Kubota SP300 (left), and SP600 (right)

Kubota's membrane sheet is made from chlorinated polyethylene, has an average pore size of 0.2 micron (maximum 0.4 micron), is much thicker than other membranes to provide long-lasting durability, and features high porosity to enable high flow. This pore size has been designed as the optimum balance between water quality and quantity. Kubota's membrane sheet has Title 22 approval for water reuse in California.

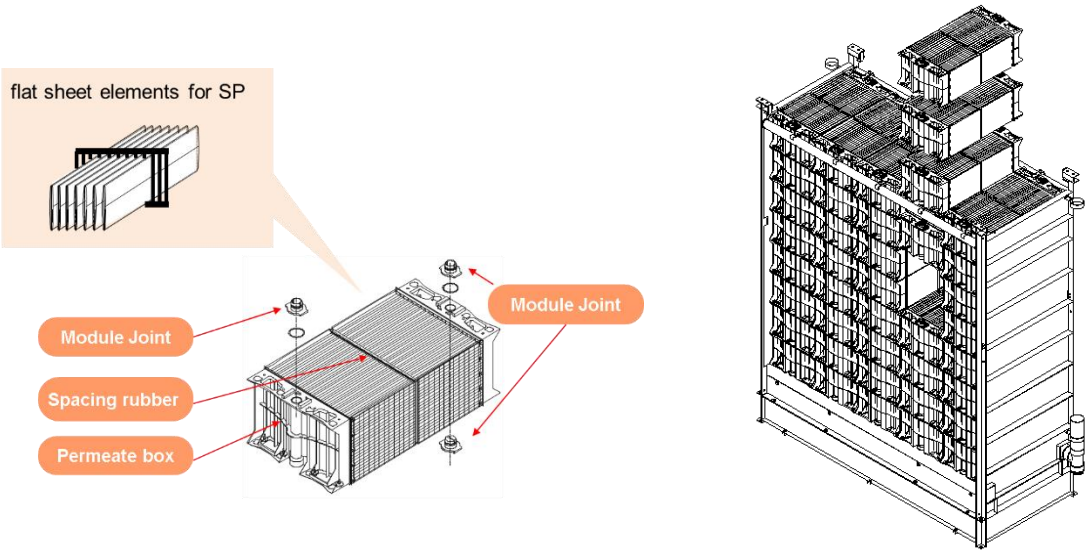

Figure 4: Membrane Module Structure (left), and SP Series Unit Structure (right))

Kubota's proposed MBR system will provide straightforward and economical phasing for future expansion to double capacity. The SP300, offered for Phase 1, is a single-deck Submerged Membrane Unit that contains 30 membrane modules within the stacked membrane block. Adding an upper membrane block upgrades the SP300 units to the double-deck SP600 units, which will double the hydraulic capacity.

Kubota Membrane USA Corporation 2016
This document is the property of KUBOTA Corporation. This document may not be duplicated and/or published without prior written consent of the owner.

3.2 MBR Process Description

The MBR treatment process is capable of meeting strict nutrient removal requirements while still maintaining a small footprint. MBR is the combined process of activated sludge (secondary treatment) and membrane filtration (tertiary treatment). Membrane units are installed in the activated sludge reactor, where sludge and treated water are separated by means of physical filtration. Other treatment processes, such as conventional activated sludge, require gravity sedimentation through the use of final clarifiers. MBRs eliminate the need for gravity sedimentation, thereby eliminating the need for final clarifiers.

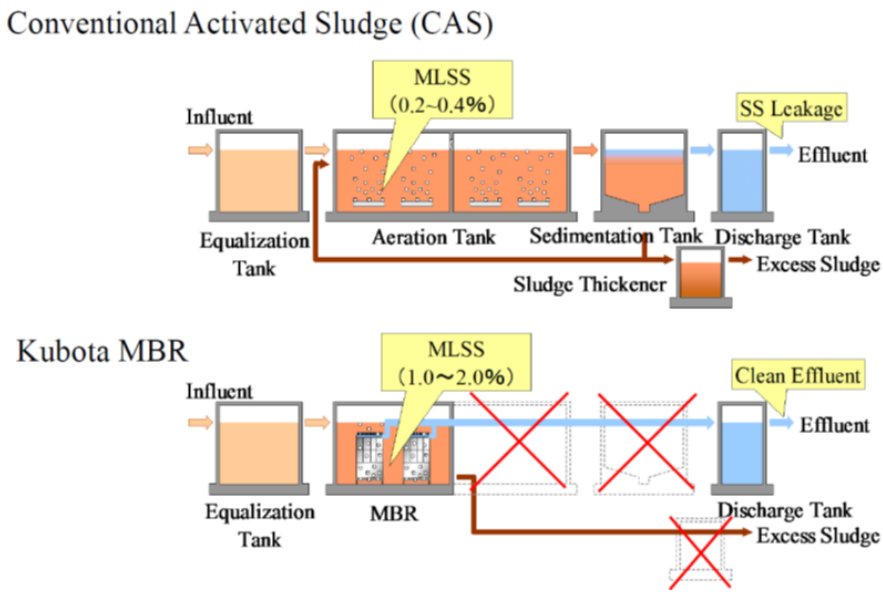

Figure 6: Typical CAS Process (top) vs. Kubota MBR Process (bottom)

Additionally, the Kubota MBR tank can operate at a mixed liquor concentrations ranging from 5,000 mg/L and 13,000 mg/L, which is much higher than that of a conventional activated sludge basin. This reduces the required aeration volume and the volume of waste sludge produced, and also gives the system increased ability to withstand influent load fluctuations.

The Kubota MBR tank works as both a solid-liquid separation tank and an aeration tank to support the biological process. Because of Kubota's stable air scour and infrequent in-situ chemical cleaning, aeration from the air scour can be considered as oxygen supply for biological treatment. This helps to reduce the oxygen requirement in the aeration tank and thus helps decrease the total operational energy cost of the treatment process.

3.3 Operation and Maintenance

The Kubota MBR system offers simple design, simple operation, and simple maintenance. Despite being able to operate at a wide range of MLSS concentrations, there is no concern of sludge bulking that could result in violation of the effluent quality requirements. This helps keep operations simple for the operator.

Kubota Membrane USA Corporation 2016
This document is the property of KUBOTA Corporation. This document may not be duplicated and/or published without prior written consent of the owner.

While the primary method of membrane cleaning for the Kubota MBR system is the air scour provided by the medium/fine bubble diffusers at the base of the membrane units, the chemical cleaning system is extremely simple and eliminates the need for separate, lined tanks for immersive cleaning. The system consists of a chemical tank and a feed pump or venturi system, which feeds the cleaning solution through the permeate piping. The venturi system can be skid-mounted on a wall, as shown in the photograph below.

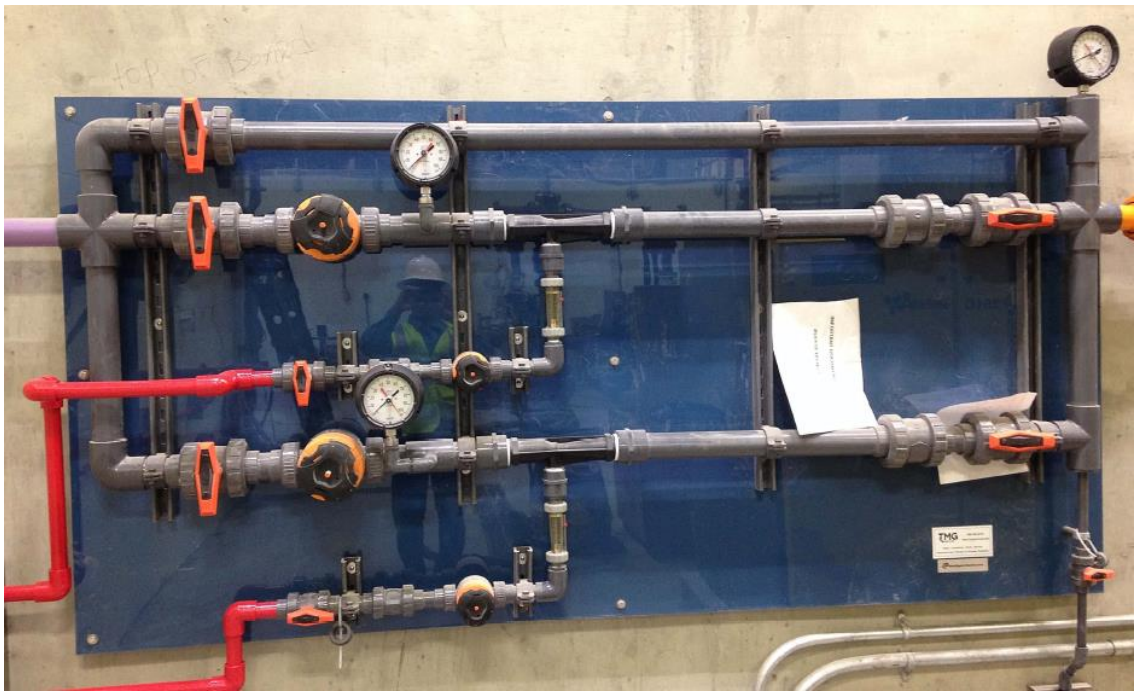

Figure 7: Skid-Mounted Clean-In-Place System

To perform chemical cleaning, there is no need to drain the tanks or remove the membrane units. All that is required is stopping the operation, opening a vent, injecting a chemical solution, and allowing that solution to soak in the membrane units for 2 to 4 hours.

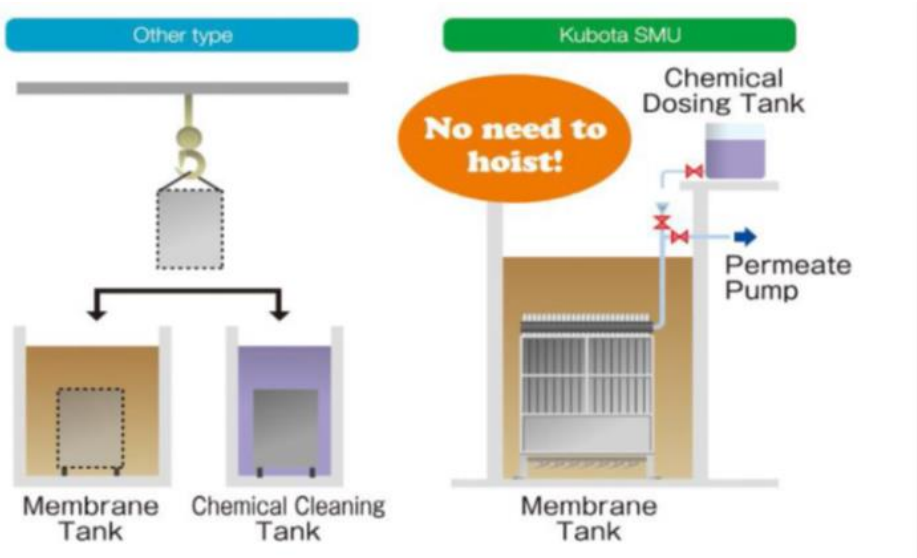

Figure 8: Chemical Cleaning for Other Manufacturers (left) vs. Kubota Membrane Units (right)

Kubota Membrane USA Corporation 2016
This document is the property of KUBOTA Corporation. This document may not be duplicated and/or published without prior written consent of the owner.

Organic fouling can be cleaned with sodium hypochlorite (NaClO). This is typically done two to four times per year. Inorganic fouling such as iron or aluminum can be cleaned by oxalic or citric acid and is typically needed once a year or less. This simple and infrequent maintenance cleaning is the only chemical cleaning required; no recovery cleaning is necessary for operation of the Kubota MBR system.

The Kubota MBR system was developed in 1990 to be low-maintenance and easy to operate. Since then, Kubota MBR package plants have been installed in many remote communities to treat small flows. Many of these plants run without constant operator attention and are visited only once every two weeks. This illustrates the ease of operation and reliability of the Kubota MBR system.

Kubota takes pride in the simplicity of our MBR systems, and we strive to build long-term relationships with our customers. We are committed to the U.S. market, and will provide excellent support through all phases of our projects.

4 Design Overview

The MBR system for the Santa Fe County Quill WWTF project was designed based on the following influent flow data *(Tables 2 and 3)*.

4.1 Influent Design Flow

We used the following flow conditions to design the capacity of both options for the proposed MBR system.

Table 2: Design Flow Conditions

Condition	Phase 1 Design Flow	Phase 2 Design Flow	Unit
Design Max Month Flow	0.5	1.0	MGD
Assumed Peak Hour Flow	1.0	2.0	MGD

The wastewater characteristics used for preliminary design, based on emails from November 22 and November 27, 2016, are listed in the table below. We are proposing two options: Option A will meet Santa Fe's pending NPDES Tier 1 discharge permit, and Option B will meet Santa Fe's pending NPDES Tier 2 discharge permit.

Table 3: Influent and Effluent Characteristics

Constituent	Design Influent	Option A NPDES Tier 1	Option B NPDES Tier 2
BOD (mg/L)	323	< 10	< 10
TSS (mg/L)	215	-	-
TN (mg/L)	42	< 6.9	< 3.0
TP (mg/L)	9.0	< 3.1	< 1.0

4.2 MBR Specifications

The proposed MBR system will allow for straightforward expansion to double capacity. Option A and Option B use the same MBR tank configuration and number of Submerged Membrane Units.

Kubota Membrane USA Corporation 2016
This document is the property of KUBOTA Corporation. This document may not be duplicated and/or published without prior written consent of the owner.

Table 4: Membrane Equipment Specifications

Component	Phase 1	Phase 2
Membrane Model	SP300	SP600
Membrane Surface Area per Unit	3,229 ft^2	6,458 ft^2
Design MLSS in MBR Tanks	12,000 mg/L	12,000 mg/L
Number of MBR Tanks	2	2
Total Number of Submerged Membrane Units	12 units (6 units per tank)	12 units (6 units per tank)
Assumed Minimum Wastewater Temperature	13°C	13°C

4.3 Preliminary Layout – Option A

The proposed MBR system for Option A includes an anaerobic tank to provide biological phosphorus removal and an anoxic tank for single-stage denitrification. The proposed process flow diagram for Option A is shown in the following figure.

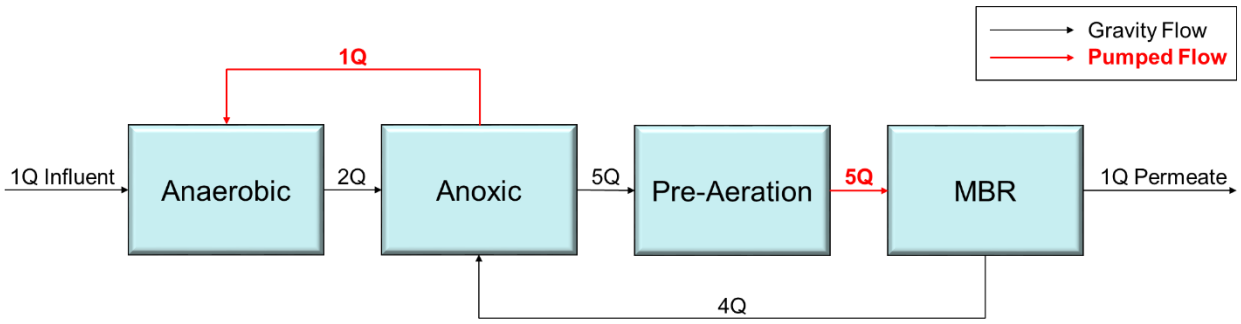

Figure 9: Option A Process Flow Diagram

The table below describes the dimensions and nominal HRT of each tank for Phase 1 of Option A. For future expansion, the sidewater depths of each tank can be increased in order to double the biological capacity without requiring additional tank construction.

Kubota Membrane USA Corporation 2016
This document is the property of KUBOTA Corporation. This document may not be duplicated and/or published without prior written consent of the owner.

Table 5: Option A – Tank Dimensions and Hydraulic Retention Times for Phase 1 (0.5 MGD)

Tank Name	Dimensions (L' x W' x SWD')	Volume per Tank (gallons)	Number of Tanks	Total Tank Volume (gallons)	Nominal HRT at 0.5 MGD (hours)
Anaerobic (AN)	15.6' x 29.7' x 9.0'	31,250	1	31,250	1.5
Anoxic (AX)	35.0 x 29.7' x 8.5'	66,096	1	66,096	3.2
Pre-Aeration (PA)	58.0' x 29.7' x 8.5'	109,531	1	109,531	5.3
MBR	23.6' x 9.8' x 9.4'	16,262	2	32,525	1.6
TOTAL	-	-	-	**239,401 gallons**	**11.5 hours**

The figure below shows a rough layout of the proposed system for Option A.

Figure 10: Option A Tank Layout

4.4 Preliminary Layout – Option B

The proposed MBR system for Option B uses a pre-anoxic and post-anoxic basin for double denitrification. The proposed process flow diagram for Option B is shown in the following figure.

The table below describes the dimensions and nominal HRT of each tank for Phase 1. For future expansion, the sidewater depths of each tank can be doubled in order to double the biological capacity without requiring additional tank construction.

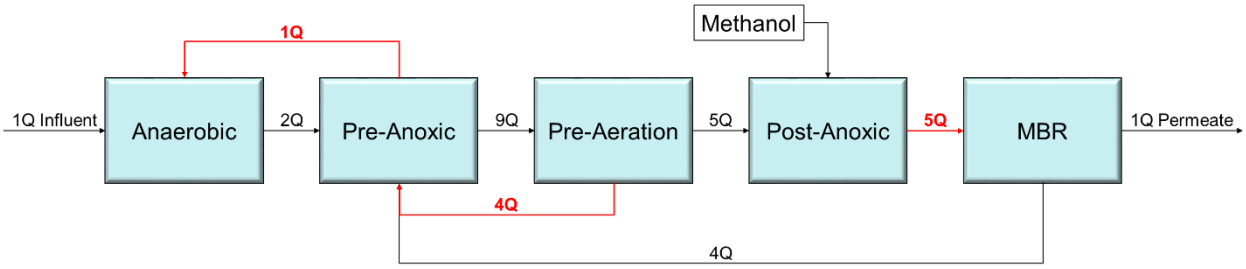

Figure 11: Option B Process Flow Diagram

Kubota Membrane USA Corporation 2016
This document is the property of KUBOTA Corporation. This document may not be duplicated and/or published without prior written consent of the owner.

Table 6: Option B – Tank Dimensions and Hydraulic Retention Times for Phase 1 (0.5 MGD)

Tank Name	Dimensions (L' x W' x SWD')	Volume per Tank (gallons)	Number of Tanks	Total Tank Volume (gallons)	Nominal HRT at 0.5 MGD (hours)
Anaerobic (AN)	15.6' x 29.7' x 9.0'	31,250	1	31,250	1.5
Pre-Anoxic (Pre-AX)	35.0 x 29.7' x 8.5'	66,096	1	66,096	3.2
Pre-Aeration (PA)	70.0' x 29.7' x 8.5'	132,192	1	132,192	6.3
Post-Anoxic (Post-AX)	15.7' x 29.7' x 8.3'	28,814	1	28,814	1.4
MBR	23.6' x 9.8' x 9.4'	16,262	2	32,525	1.6
TOTAL	-	-	-	290,877 gallons	14.0 hours

The figure below shows a rough layout of the proposed system for Option B.

Figure 12: Option B Tank Layout

4.5 Operation and Maintenance Estimates

The table below shows our estimated energy consumption and chemical requirements during Average Day Flow.

Table 7: Design Flow Conditions

Condition	Option A – Tier 1 Effluent	Option B – Tier 2 Effluent
Estimated Energy Consumption	2058 kWh/day	2205 kWh/day
Estimated 12.5% Sodium Hypochlorite Usage for Chemical Cleaning	304 gallons/year	304 gallons/year
Estimated 100% Oxalic Acid Powder Usage for Chemical Cleaning	318 lb/year	318 lb/year
Estimated Methanol Addition for 2nd Stage Denitrification	N/A	49 gallons/day

Kubota Membrane USA Corporation 2016
This document is the property of KUBOTA Corporation. This document may not be duplicated and/or published without prior written consent of the owner.

5 Scope of Supply

The following proposed items will be supplied by Kubota Membrane USA, and are included in the budgetary prices that are listed in Section 7. We have described our proposed scope for Options A and B in separate tables. Both options include two phases as described above in Section 4.1.

5.1 Major Equipment and Instrumentation – Option A

Table 8: Option A Major Equipment and Instrumentation in Kubota's Scope of Supply

Name	Type	Option A, Phase 1 Quantity	Option A, Phase 2 Quantity
Anaerobic Zone (AN) Equipment			
Anaerobic Mixer	Submersible	1	1
Level Switch	Float	2 (1 LL + 1 HL)	0
Anoxic Zone (AX) Equipment			
Anoxic Mixer	Submersible	1	1
Level Switch	Float	2 (1 LL + 1 HL)	0
Level Transmitter	Hydrostatic	1	0
Internal Recycle Pump (AX to AN)	Submersible	2 (1 duty + 1 spare)	1
Internal Recycle Flow Meter (AX to AN)	Magnetic	1	1
Pre-Aeration Zone (PA) Equipment			
Pre-Aeration Diffuser Grid	Fine Bubble	1 set	0
DO Meter	LDO Probe and Transmitter	1	0
Level Switch	Float	2 (1 LL + 1 HL)	0
Level Transmitter	Hydrostatic	1	0
RAS Feed Forward Pump (PA to MBR)	Submersible	2 (1 duty + 1 spare)	1
RAS Feed Forward Flow Meter (PA to MBR)	Magnetic	1	1
Pre-Aeration Blower	Positive Displacement	1	0
Air Flow Meter	Mass Air Flow	1	0
Membrane Zone (MBR) Equipment			
Submerged Membrane Unit	SP300 Flat Plate	12	0
Membrane Block	SP300	0	12
Submerged Membrane Unit Guide Set	Guide Pipes and Stabilizer Pipes	12 sets	0
Level Switch	Float	4 (2 LL + 2 HL)	0
Valves	Manual	Various	Various

Kubota Membrane USA Corporation 2016
This document is the property of KUBOTA Corporation. This document may not be duplicated and/or published without prior written consent of the owner.

Name	Type	Option A, Phase 1 Quantity	Option A, Phase 2 Quantity
Piping Inside Process Tanks	All Piping <3" Inside Process Tanks	Various	Various
WAS Pump	Self-Priming	1	0
WAS Flow Meter	Electromagnetic	1	0
MBR Air Scour Blower	Positive Displacement	3 (2 duty + 1 installed common standby)	0
Air Flow Meter	Mass Air Flow	2	0
Permeate System Equipment			
Permeate Pump	Self-Priming Centrifugal	3 (2 duty + 1 installed standby)	2
Pressure Transmitter	Diaphragm	2	2
Permeate Flow Meter	Electromagnetic	2	2
Permeate Flow Control Valve	Automated Ball Valve	2	2
Turbidity Meter	Optical Meter and Transmitter	2	2
Other Equipment			
Clean-In-Place System	Chemical Injection System	1	0
MBR Control Panel, HMI, SCADA	MBR Control System	1	0

5.2 Major Equipment and Instrumentation – Option B

Table 9: Option B Major Equipment and Instrumentation in Kubota's Scope of Supply

Name	Type	Option B, Phase 1 Quantity	Option B, Phase 2 Quantity
Anaerobic Zone (AN) Equipment			
Anaerobic Mixer	Submersible	1	1
Level Switch	Float	2 (1 LL + 1 HL)	0
Pre-Anoxic Zone (Pre-AX) Equipment			
Pre-Anoxic Mixer	Submersible	1	1
Level Switch	Float	2 (1 LL + 1 HL)	0
Level Transmitter	Hydrostatic	1	0
Internal Recycle Pump (Pre-AX to AN)	Submersible	2 (1 duty + 1 spare)	1
Internal Recycle Flow Meter (Pre-AX to AN)	Magnetic	1	1
Pre-Aeration Zone (PA) Equipment			
Pre-Aeration Diffuser Grid	Fine Bubble	1 set	0

Kubota Membrane USA Corporation 2016
This document is the property of KUBOTA Corporation. This document may not be duplicated and/or published without prior written consent of the owner.

Name	Type	Option B, Phase 1 Quantity	Option B, Phase 2 Quantity
DO Meter	LDO Probe and Transmitter	1	0
Level Transmitter	Hydrostatic	1	0
NO_x Recycle Pump (PA to Pre-AX)	Submersible	2 (1 duty + 1 spare)	1
NO_x Recycle Flow Meter (PA to Pre-AX)	Magnetic	1	1
Pre-Aeration Blower	Positive Displacement	1	0
Air Flow Meter	Mass Air Flow	1	0
Post-Anoxic Zone (Post-AX) Equipment			
Post-Anoxic Mixer	Submersible	1	1
Level Switch	Float	2 (1 LL + 1 HL)	0
Level Transmitter	Hydrostatic	1	0
RAS Feed Forward Pump (Post-AX to MBR)	Submersible	2 (1 duty + 1 spare)	1
RAS Feed Forward Flow Meter (Post-AX to MBR)	Magnetic	1	1
Membrane Zone (MBR) Equipment			
Submerged Membrane Unit	SP300 Flat Plate	12	0
Membrane Block	SP300	0	12
Submerged Membrane Unit Guide Set	Guide Pipes and Stabilizer Pipes	12 sets	0
Level Switch	Float	4 (2 LL + 2 HL)	0
Valves	Manual	Various	Various
Piping Inside Process Tanks	All Piping <3” Inside Process Tanks	Various	Various
WAS Pump	Self-Priming	1	0
WAS Flow Meter	Electromagnetic	1	0
MBR Air Scour Blower	Positive Displacement	3 (2 duty + 1 installed common standby)	0
Air Flow Meter	Mass Air Flow	2	0
Permeate System Equipment			
Permeate Pump	Self-Priming Centrifugal	3 (2 duty + 1 installed standby)	2
Pressure Transmitter	Diaphragm	2	2
Permeate Flow Meter	Electromagnetic	2	2
Permeate Flow Control Valve	Automated Ball Valve	2	2

Kubota Membrane USA Corporation 2016
This document is the property of KUBOTA Corporation. This document may not be duplicated and/or published without prior written consent of the owner.

Name	Type	Option B, Phase 1 Quantity	Option B, Phase 2 Quantity
Turbidity Meter	Optical Meter and Transmitter	2	2
Other Equipment			
Clean-In-Place System	Chemical Injection System	1	0
Methanol Addition System	Chemical Injection System	1	0
Alum Addition System	Chemical Injection System	1	0
MBR Control Panel, HMI, SCADA	MBR Control System	1	0

5.3 Direct Services

The following services are included in Kubota's scope of supply:

Commissioning

- 10 days on-site for start-up and commissioning.
- Additional days are available as needed for an additional cost.

Training

- Mechanical Inspection and Equipment Installation Verification
- Operator Training (Please see Table 10 below)

Table 10: Training and Workshops Included in Kubota's Scope of Supply

Training/Workshop	Brief Summary
SCADA and HMI	1. Navigation of all HMI screens and menus. 2. Review of automatic operations and controls. 3. Changing process set points. 4. Overriding controls from the HMI. 5. Manual operation of the system in the event of a power failure.
CIP training	1. Navigation of CIP (Clean-In-Place), in-situ maintenance chemical cleaning. 2. Control from HMI and operation of manual valve. 3. Adjust set points of chemical flow.
Troubleshooting	1. Case study of troubleshooting 2. Recovery from trouble 3. "Fish bone" approach
Daily testing	1. Filterability test 2. Viscosity measurement

Workshop/Additional Training Available (No Charge)

- In addition to our standard training at commissioning, Kubota Membrane USA will host an annual operator workshop in which operators meet to exchange ideas and learn about the latest developments in MBR technology.
- Customized individual training, such as membrane disassembling training, is also available upon request.

Kubota Membrane USA Corporation 2016
This document is the property of KUBOTA Corporation. This document may not be duplicated and/or published without prior written consent of the owner.

Remote Monitoring Available (No Charge for First Year)

- *Support by Remote Monitoring*
  The Kubota membrane system as proposed includes a SCADA system that can be remotely monitored and controlled, provided wireless connectivity is available. Technical support staff can monitor the status of your system to proactively address potential problems. Whenever a call is placed to our service staff, that person will be able to log in to the SCADA system and easily see what is happening at the plant.

5.4 Exclusions to Kubota Scope of Supply

The following items are not currently included in the Kubota scope of supply:

- Equalization System (Pump, Mixer, Level Transmitters)
- Pretreatment/Headworks (Fine Screen, Grit Removal, DAF, etc.)
- Solids Handling Equipment
- Disinfection System
- Concrete Tanks, Building Construction
- All piping that is outside of the MBR tanks, including header pipes
- Civil Works, installation and connection of piping/wiring
- VFDs and motor controllers

6 Warranty

Equipment Warranty

Kubota's standard 2-year membrane warranty, and 1-year mechanical equipment warranty is included in the main budgetary price proposed (Table 9) and goes into effect at the commencement date of commissioning. The warranty included is a guarantee that the products supplied by Kubota are free from defect in material or workmanship.

7 Budgetary Price

The estimated budgetary price for the equipment and instrumentation described herein is shown below *(Table 9)*.

Table 11: Budgetary Price for Proposed Kubota MBR Equipment and Equipment

Budgetary Price – MBR Equipment, Instrumentation, and Services	
Option A – Tier 1 Effluent	Phase 1: $1,141,000
	Phase 2: $567,000
Option B – Tier 2 Effluent	Phase 1: $1,280,000
	Phase 2: $636,000

Freight is excluded from the price. The pricing herein is for budgetary purposes only and does not constitute an offer of sale. Taxes or duties are not included.

Kubota Membrane USA Corporation 2016
This document is the property of KUBOTA Corporation. This document may not be duplicated and/or published without prior written consent of the owner.

8 24/7 Technical Support (Always Free of Charge)

24/7 phone support is available in addition to support during regular business hours. 24-hour technical support calls are shared within the Kubota staff so that you can rest assured knowing that knowledgeable engineers and technicians are just a phone call away.

9 Additional Services (Optional)

The following service plans are optional and may be added to Kubota's scope of supply if desired for an additional cost.

Kubota Membrane Protection Plan

Under this plan, Kubota Membrane USA warrants against any membrane failure for 10 years when the system is operated in accordance with the O&M manual. This plan includes annual onsite membrane inspection with membrane examination and inspection report, periodic replacement of parts and damaged membranes (if any), and phone support during the 10-year period. With this plan, Kubota will replace each cartridge at least once during the 10-year span, regardless of necessity.

Kubota Custom Membrane Support Plan

Kubota can customize your support/service package to meet your needs.

The following table shows a variety of our available services:

Table 12: Kubota's Available Services

Service	Note
Periodical technical support	Monthly, Quarterly, Annually
Phone support	Available 24/7
SCADA monitoring	Weekly, Monthly, Quarterly
Periodical site visit	Quarterly, Semi-annually, Annually
Membrane inspection	Annual, Semi-annual, 3x per year
Membrane protection (10-year contract)	Select annual or semi-annual inspections
Program (SCADA, etc.) update	Based on hydraulic changes, such as increases in flow or changes in operation.

(End of Document)

Kubota Membrane USA Corporation 2016
This document is the property of KUBOTA Corporation. This document may not be duplicated and/or published without prior written consent of the owner.

OMNIFLO® SEQUENCING BATCH REACTOR PROPOSAL

FOR

SANTA FE COUNTY, NM

4800 North Point Parkway, Suite 250, Alpharetta, GA 30022

+1 (866) 926-8420 (toll-free) +1 (978) 614-7111 (toll) www.evoqua.com

December 12, 2016

2607 N. Grandview Blvd. Suite 130
Waukesha, WI 53188

Re: Santa Fe County WWTP **Omniflo®** SBR

Dear Mr. Ed DuBois, P.E.:

We are pleased to present our proposal for a Jet Tech **Omniflo®** SBR from Evoqua. The **Omniflo®** SBR system utilizes activated sludge process. Some key advantages include:

- **Simplicity**. All unit process steps occur within the reactors. The need for secondary clarifiers and a sludge recycle system are eliminated. This provides simplicity in the design and operation of the system when compared to other biological processes.

- **Efficiency**. The SBR process utilizes a time based process which allows aeration times to be adjusted based on current organic loads to minimize energy usage.

- **Inherent BNR capability**. Since the SBR is a time based process, Biological Nutrient Removal (BNR) is achievable by utilizing anoxic, anaerobic, and aerobic steps within the reactors. Unlike other processes, no separate anoxic or anaerobic tank compartments are required.

- **Decanter**. Evoqua uses a floating decanter that pulls from 18" below the surface to exclude floatables. The decanter is controlled by an effluent valve located outside of the tank. Conversely, other SBR manufacturers use fixed decanter or units that require electromechanical actuation inside the tank making maintenance more difficult and unsafe.

- **Controls**. Evoqua offers state of the art flow proportional controls strategy. This strategy automatically adjusts cycle times and aeration based on the plant influent flow rate, allowing cycle structure and aeration to match real time conditions. The controls also include an automatic failure response strategy in which a critical failure can automatically take the effected tank out of service and automatically adjust the operation of the remaining tank. Other manufacturers do not offer this level of operator protection.

There are several equipment variations, configurations, and options that can be used with the **Omniflo®** SBR system, all of which are designed to provide the necessary treatment for each specific project. Equipment selection most suitable for a specific project is dependent on the customer's effluent requirement, desired ease of maintenance and operation, power consumption, expected future expansion, and initial cost. We welcome the opportunity to pursue equipment options for selection of the most efficient and economical system that meets the project requirements.

We very much appreciate the opportunity to offer our equipment and services for this project. If you have any questions, or desire additional information, please do not hesitate to contact us. Thank you for considering Evoqua Water Technologies LLC.

Sincerely,

Nick Barczewski
Applications Engineer

cc: Dennis Emrie, Misco
Tracey Mayer, Evoqua

PROJECT DESIGN CRITERIA

Influent Flows

Parameter	Value	Units
Phase I Average Daily Flow (ADF)	0.5	MGD
Peak Daily Flow	1.0	MGD

Influent Water Quality

Parameter	Value	Units
Biochemical Oxygen Demand (BOD_5)	323	mg/L
Total Suspended Solids (TSS)	215	mg/L
Ammonium Nitrogen (NH_4-N)	34	mg/L
Total Kjeldahl Nitrogen (TKN)	42	mg/L
Total Phosphorus (TP)	9	mg/L
Maximum Water Temperature	20	Deg C
Minimum Water Temperature	12	Deg C

Effluent from SBR System

Parameter	Value	Units
BOD_5	≤ 10	mg/l
TSS	≤ 10	mg/l
Total Nitrogen (TN)	< 5 - 6.9	mg/l
Total Phosphorus (TP) Bio-P	≤ 2	mg/l

Tier 2 Effluent from Tertiary Continuous Backwash Sand Filter

Parameter	Value	Units
TSS	≤ 5	mg/l
Total Nitrogen (TN)	< 3	mg/l
Total Phosphorus (TP)	< 1	mg/l

Tier 1 Effluent from Tertiary Forty-X Disc Filter

Parameter	Value	Units
TSS	≤5	mg/l
Total Phosphorus (TP)	< 1	mg/l

OMNIFLO® SYSTEM DESCRIPTION

The **Omniflo®** SBR system utilizes the Sequencing Batch Reactor (SBR) activated sludge process, which completes all unit process steps within the same reactor, eliminating the need for both secondary clarifiers and a sludge recycle system. The SBR process provides for inherent flow equalization and flow blending, and greatly reduces operator skill and attention requirements.

In a true batch SBR, there are five basic cycles in each batch.

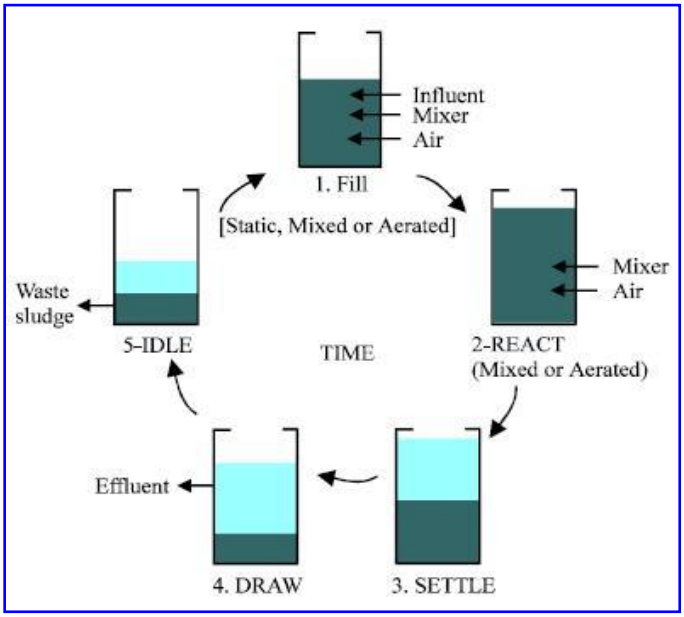

During **Anoxic Fill**, the basin is loaded with food and the soluble BOD is absorbed and stored by the facultative, rapid settling biomass. In these anoxic conditions poor settling filamentous bacteria cannot readily absorb the soluble BOD creating an inherent advantage for the facultative bacteria. The selective pressures exhibited on the biomass of zero D.O. in Anoxic Fill allows good settling, facultative organisms to predominate. If given enough time, Anoxic Fill will turn anaerobic triggering phosphorus release from the PAO's, a precursor for phosphorus luxury uptake during the aerated portions of the cycle maximizing bio-P removal.

During **Aerated Fill** the blowers and pumps are automatically turned on to provide air and complete mixing. This initiates the "feast" environment for the biomass. The biomass begins to metabolize the food they have absorbed. They utilize the oxygen provided very rapidly with high D.O. uptake rates and low residual D.O. values. Simultaneous nitrification / de-nitrification occurs when aerated fill is initiated since both anoxic and aerobic zones are present within the reactor.

React begins after the basin has completed filling, and the influent flow has been diverted to another SBR tank. No more food (influent) enters the reactor basin during React. This forces the organisms to scour for any remaining BOD. Aeration continues in the full reactor until complete biodegradation is achieved. React continues until the food is consumed and the

biomass enters its "famine" state. True batch React (no influent, no effluent) is critical to achieve intense famine conditions for optimum organism selection.

Next, the biomass is allowed to **Settle** in perfect quiescent conditions; no influent is introduced during settle and no effluent is decanted. Since the reactor is under true quiescent conditions during settle, 100% of the reactor capacity is available for liquid/solids separation.

Following the Settle cycle, the **Decant** cycle begins. Decant is initiated by opening an automatic valve and treated effluent is discharged through the decanter from 18 inches below the surface, avoiding discharge of any surface contaminates. Decant continues until approximately the upper 1/5th of the basin is discharged. While the reactor waits in **Idle** to receive the next batch, settled sludge is wasted from the reactor.

Floating Effluent Decanter

The Jet Tech Floating Effluent Decanter from Evoqua is a "solids excluding" decanter that prohibits suspended solids from entering the effluent piping. The flexible "knee joint" mechanism allows vertical travel and is braced to eliminate any lateral movement. There are no electro mechanical components in the reactor increasing safety and ease of maintenance.

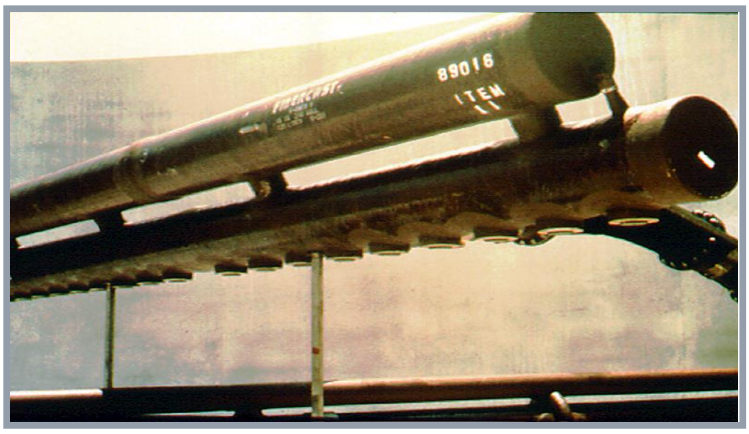

Jet Aeration

The jet aeration system used for the diffusion of oxygen in the **Omniflo®** SBR process has the flexibility to either aerate or mix independently, without the need for additional equipment. Air to the system can be varied, or completely shut off, and the pumps will provide the required mixing action, enhancing process control. Jet aeration is a very low maintenance option and can last in excess of 20 years with no replacement or reduction in OTE unlike fine bubble diffusers.

INFLUENT DISTRIBUTION MANIFOLDS

The Jet Tech **Influent Distribution Manifold (ID)** from Evoqua is designed to distribute the influent flow evenly across the reactor floor during the "anoxic fill" portion of the operating cycle. This feature ensures that the influent comes in intimate contact with the concentrated biomass, offering better organism selection and settling control as well as added flexibility in the anoxic cycle for phosphorus removal. This manifold also greatly increases the system's flexibility by allowing for a "filled decant" mode during single-tank operation or high-flow conditions, without disturbing the sludge blanket. Other SBR systems using baffle walls and fixed volume “anoxic contact zones” decrease anoxic times at increased flows, causing process problems. Conversely, the **Omniflo®** SBR process from Evoqua preserves the anoxic fill time during increased flow rates with the ID manifold.

CONTROLS

The **Omniflo®** SBR **Operating Strategy and Control System** from Evoqua is unique to the industry because of its flow proportional capability. The various process steps are controlled by a microprocessor which receives continuous signals from level monitoring devices in each reactor basin. Based on the fill time between adjustable set points, the microprocessor determines the influent flow rate and controls the process accordingly. The control system operates the plant according to a preset treatment strategy which is field adjustable to meet changing conditions or requirements. The **Omniflo®** SBR Strategy maintains true batch characteristics up to peak hydraulic flows of 3 times design.

The controls also include *Failure Response* which provides a safety net when the operators are away. *Failure Response* continuously monitors the system for critical failures. If a critical failure is observed, the controls will alarm and activate a simple set point countdown timer. When this timer ends, if the operator has not acknowledged or fixed the failure, the *Failure Response* will take the affected basin out of service and automatically readjust the cycle structure until the operator completes the necessary repairs thus avoiding decanting a bad batch.

DESIGN BASIS

The design was based on the influent flows and loads as well as the required effluents outlined on page 1. We are proposing a two (2) tank SBR system with Jet Aeration that will be utilized for both Tier 1 and Tier 2 effluent requirements. Due to the strict TN limit of the Tier 2 requirements the SBR system will need to be followed by a Denite Filter (continuous backwash sand filter) in order to reliably meet the 3 mg/l TN limit. This will have the added benefit of helping achieve the 1 mg/l TP requirement through further TSS removal. The Tier 1 effluent limits can be achieved from the SBR system, but a Forty-X Disc filter is recommended as extra protection.

Phase I will operate as a standard 2-tank SBR system, but the influent and effluent equipment have been sized for Phase II (1 MGD ADF & 2 MGD Peak day). Phase II will operate as a 4-tank SBR system with identical equipment. Finally, for the ultimate expansion to 2 MGD (4 MGD Peak) the flow will require a flow splitter where 50% goes to the existing Phase II 4-tank system, and the other 50% goes to an additional Phase III 4-tank system with identical equipment from Phase I & II. The end result will be a 2-train system each operating with (4) SBR basins.

Sizing for a Post Equalization basin, if done for the ultimate flow of 2 MGD, will be very nearly equal to the footprint of a single SBR basin as seen on the provided design calculations. The design spreadsheet also shows details regarding the process steps, equipment sizing, and estimated power costs. The design includes assumed values that will need to be confirmed as the project moves forward.

SBR Process Layout and Dimensions		
Parameter	**Value**	**Units**
Number of SBR basins	2	
Normal Top Water Level at ADF	22	Feet
Bottom Water Level at Design	18.67	Feet
Maximum High Water Level	23.5	Feet
Recommended TOW Elevation	24	Feet
Length	50	Feet
Width	50	Feet
Total SBR Volume at ADF	0.83	MG

Design Parameters		
Parameter	**Value**	**Units**
Aerobic Solids Retention Time (SRT)	10.3	days
Hydraulic Retention Time (HRT)	39.7	hours
Mixed Liquor Suspended Solids (MLSS)	3,500	mg/l
Site Elevation	7,000	feet
Cycles per day	8	
Length of Cycles at ADF	6	Hours

Process Operation		
Parameter	**Value**	**Units**
Lbs O2 per lb BOD removed	1.34	lbs
Lbs O2 per lb TKN oxidized	4.6	lbs
Denitrification Oxygen Credit (80%)	291	lbs
Actual Oxygen Required (AOR)	2,056	lbs/day
D.O.	2.0	mg/l
Alpha	0.85	
Beta	0.95	
Temperature	20	C
SOR	4,034	lbs/day
Hours per day aeration per basin	10.8	Hours/basin
Oxygenation rate	187	SOR Lbs/Hr/Basin
SOTR	25.7	%
Air rate per basin	700	SCFM

SCOPE OF SUPPLY

SBR Process Equipment:

Aeration Header: Two (2) JET TECH Model BDM1240-16 Aeration Headers shall be provided. Each header will include sixteen (16) Model 40 jet aerators, and will be constructed of FRP. Header liquid manifold shall terminate with a 12" flanged connection. In-basin vertical air drop pipe is included, and will be constructed of 6" FRP. In-basin drop pipe will begin at the top of the tank wall, immediately above the aeration header, with a 6" flanged connection, and terminate at the air duct of the aeration header. All other in-basin air and liquid piping shall be provided by others.

Blowers and Accessories: Two (2) Rotary Positive Displacement Blowers (one as a standby) shall be provided. Each blower will be selected to deliver 700 SCFM at 9.55 PSIG when operated at 95°F and 7,000 ft. ASL. Each blower will be furnished complete with inlet filter, inlet silencer, discharge silencer, inlet and discharge sleeve type expansion joints, butterfly valve, check valve, pressure relief valve, base plate, V-belt drive, and a 60 Hp, 1800 RPM, 460 volt, 3 ph, 60 hz, TEFC, horizontal motor.

Jet Motive Liquid Pump: Two (2) Horizontal, Centrifugal Dry-Pit Pumps shall be provided. Each pump will be selected to deliver 2,929 GPM at a total pump head of 21 ft. Each pump will be furnished complete with mechanical seals, mounting plate, 10" discharge flange, and a 25 Hp, 460 volt, 3 ph, 60 hz, TEFC motor. Water lubrication lines shall be furnished by others. Pumps shall also be capable of Vacflush® operation when used in conjunction with the valves listed in the valve section of this proposal.

Decanter: Two (2) JET TECH Model FLED10-1800 Floating Effluent Decanters shall be provided. Also included will be decanter supports, automatic control valves, and in-basin discharge piping. The in-basin discharge piping of the decanter shall terminate with a 10" flange and connect to the flanged wall penetration supplied by others.

Influent Distribution Manifold: Two (2) JET TECH Model ID10-1400 Manifolds including supports shall be provided, and will be 10" diameter constructed of FRP. Manifold shall terminate with a 10" flange and connect the flanged wall penetration supplied by others.

Suction Bell: Two (2) 14" suction bells, one for each jet motive pump, shall be provided, and will be constructed of FRP. Suction bell shall terminate with a 14" flange and connect to the flanged wall penetration by others.

Waste Sludge Pump: Two (2) Submersible Sewage Pumps shall be provided for sludge wasting (one per SBR). Each pump will be selected to deliver between 250 GPM at a total pump head of 16 ft. Each pump will be furnished complete with a 4" discharge connection, 30 ft. power cable, thermal overload protection, retrieval guide bars and guide bar brackets, stainless steel lifting cable, and a 460 volt, 3 ph, 60 hz, submersible motor.

Vacflush® Aerator Cleaning System: Two (2) Vacflush® Header Cleaning Systems shall be utilized. All necessary valves for operation of the Vacflush® System shall be provided by Evoqua and shall be as described in the below valve section. All out-of-basin liquid piping and accessories, including the crossover pipe, air release valve, connection hardware and supports to complete the system are not included, and shall be furnished by others.

Valves: Valves shall be DeZurik and furnished per the following schedule. All automatic valves will have 460 volt 3 phase AUMA actuators with local control buttons. Power for valves shall be provided by the installing contractor. Valves shall not be powered by the SBR control panel.

Two (2) 8" automatic plug valves (influent control).
Two (2) 10" automatic butterfly valves (effluent control).
Two (2) 6" automatic butterfly valves (air control).
Four (4) 12" manual plug valves (pump isolation).
Four (4) 10" manual plug valves (Vacflush®)
Note: WAS piping, basin drains, and Post-EQ piping valves are by others

Field Joint Material: Materials necessary to complete field joints of the in-basin FRP process equipment supplied by Evoqua shall be supplied in sufficient quantity and quality for the intended application. Labor for completing field joints shall be provided by the installing contractor.

Supports: All necessary supports for the in-basin equipment supplied by Evoqua and described above are included. Supports will be constructed of Type 304 stainless steel. Field welding of supports shall be by the installing contractor.

Hardware: Necessary anchor bolts, gaskets, and fastening hardware for mounting and connecting in-basin equipment supplied by Evoqua are included. Anchor bolts and connecting hardware shall be Type 18-8 stainless steel. Note: Not included in our scope of supply are the hardware and gaskets at Evoqua/Contractor interfacing flanged connections, which shall be supplied by the installing contractor.

Post Equalization Equipment:

Effluent Transfer Pump: Three (3) Submersible Sewage Pumps shall be provided (1 as a standby). Each pump will be selected to deliver 350 GPM at a total pump head of 16 ft. Each operating pump will be furnished complete with 4" discharge connection, 30 ft. of power cable, thermal overload protection, retrieval guide bars and guide bar brackets, stainless steel lifting cable, and a 460 volt, 3 ph, 60 hz, submersible motor.

Ancillary Equipment & Services:

Manufacturer Service: Eighteen (18) man-days of start-up and operator training service are included. Service will be provided in six (6) trips to the job site. Service shall consist of dry installation inspection, wet start-up, controls start-up, and operator process training.

Process Control Panel: One (1) Pre-programmed process control panel capable of directing operation of all SBR functions shall be provided. Features include the following:

- NEMA 12 Enclosure
- Allen Bradley PLC, I/O modules, and power supply
- Color touchscreen HMI
- Control / Monitoring for Equipment listed in this proposal (including Post-EQ pumps)
- HOA Switches
- Indicating Lights
- Remote Access Modem
- (3) Level Transducers with stilling well for (1 per basin including Post-EQ)
- (5) Level Floats (including 3 for Post-EQ)
- Flow Proportional Control Software
- Failure Response

Submittals and O&M Manuals: Six (6) Equipment Submittals and four (4) O&M Manuals shall be provided.

BUDGETARY PRICING

Budgetary Pricing	
Item	**Price**
Equipment and Services as described in this Proposal	$610,000
Adder for Blower Sound Enclosures	*+$20,000*

The scope of supply and pricing are based on Evoqua's standard equipment selection, standard terms of sale and warranty terms. Any variations from these standards may affect this budgetary quotation. Additionally, please note that this budgetary quotation is for review and informational purposes only and does not constitute an offer for acceptance.

Items Not Included:

This proposal includes equipment of Evoqua standard design, and materials of construction as stated herein. Other materials of construction can be used upon request at additional costs. This proposal does not include:

- Tertiary Filters
- Post-EQ aeration or mixing equipment or controls for such equipment
- Installation.
- Sales or use taxes.
- Tanks and tank wall penetrations.
- Out-of-basin air or liquid piping.
- Chemical feed equipment.
- Interconnecting electrical wiring.
- Hardware at in-basin/out-of-basin interfacing flange connection.
- Motor starters & related electrical controls.
- Any items not specifically listed in this proposal.

CLARIFICATIONS:

- Decanter wall penetrations must be cast in place (not link seal). Contractor must provide a ¾" hose connection to be tapped between the basin wall and effluent valve to submerge decanter. Decanter outlet piping must be designed with a submerged outlet or traps to prevent air from entering.
- Basin floor / walls must be designed to accommodate a 5-5/8" anchor bolt embedment.
- All equipment is quoted with manufacturer's standard coatings.
- Power for all valve actuators shall be the responsibility of the installing contractor. Provisions for valve power through the SBR control panel have not been included. Voltage requirements for automatic valves are noted in the valve section of this proposal.
- All welding shall be per AWS standards (ASME welding procedures for pressure piping do not apply).
- Pricing is based on providing Evoqua's standard controls package. Control and/or monitoring for other system components can be readily incorporated into the SBR control panel. Any additional control and/or monitoring will result in an increase to the quoted price.
- Chemical feed equipment has not been included. Any required chemical feed systems for nutrient addition, chemical P removal, alkalinity supplementation, pH adjustment, or methanol addition can be provided at additional cost.
- Contractor shall be responsible for providing 120V power to the blower enclosure vent fan motor.
- Freeze protection is not included. Contractor shall be responsible for providing freeze protection for any piping subject to freezing.

SCHEDULE:

Approval Drawings: 8-12 weeks* after signature of Agreement by Evoqua and Purchaser.
Shipment: 14-18 weeks* after approval

*Schedules for submittals and equipment delivery to be adjusted at time of order based upon existing order backlog.

Evoqua Water Technologies LLC Confidential Information

All of the information set forth in this quotation (including drawings, designs and specifications) is confidential and/or proprietary and has been prepared for your use solely in considering the purchase of the equipment and/or services described herein. Transmission of all or any part of this information to others, or use by you, for other purposes is expressly prohibited without our prior written consent.

PHASE I DESIGN CALCULATIONS

Omniflo® Sequencing Batch Reactor Design Calculations

Project:	Santa Fe County WWTP	Date:	12-Dec-2016
Engineer:	HDR	Designer:	N. Barczewski

2 Basin SBR System with Jets - Phase I

I. DESIGN PARAMETERS:

Influent & Effluent Characteristics

Average Daily Flow (ADF)	=	0.50	MGD	1,893	m3/day
Peak Daily Flow	=	1.00	MGD	3,785	m3/day
BOD to SBR	=	323	mg/l *		
	=	1,347	lbs/day	611	kg/day
Effluent BOD	<	10	mg/l		
TSS to SBR	=	215	mg/l *		
	=	897	lbs/day	407	kg/day
Inert TSS fraction	=	40	% *		
Effluent TSS	<	10	mg/l		
Influent dissolved solids, TDS	=	500	mg/l *		
Influent NH4-N	=	34	mg/l *		
	=	140	lbs/day	64	kg/day
Influent TKN	=	42	mg/l		
	=	175	lbs/day	79	kg/day
Effluent NH3-N	<		not required	Summer	
	<		not required	Winter	
Effluent Total Nitrogen	<	5	mg/l		
			Assumed standard uninhibited nitrification rate*		
Influent Phosphorus	=	9	mg/l		
	=	38	lbs/day	17	kg/day
Effluent Phosphorus	<	1.0	mg/l with Chemical addition		
Min. Water Temperature	=	12 °C			
Max. Water Temperature	=	20 °C			

*Notes assumed values, which may need to be confirmed.

Private and Confidential

Omniflo® Sequencing Batch Reactor Design Calculations

Project:	Santa Fe County WWTP	Date:	12-Dec-2016
Engineer:	HDR	Designer:	N. Barczewski

Reactor & Process Characteristics

Design MLSS	=	3,500	mg/l @ Top Water Level		
		4,123	mg/l @ Bottom Water Level		
Hydr. Retention Time provided	=	1.65	Days	39.7	Hours
Aerobic Sludge Age (SRTox)	=	10.3	Days min. SRTox		
System SRT	=	22.9	Days		
Biosolids yield factor	=	0.54	gVSS/gBODr/d		
Aerobic or Oxic F:M	=	0.12	gBOD/gMLSS/d		
System F:M	=	0.06	gBOD/gMLSS/d		
Elevation	=	7,000	ft. MSL*	2133.6	m MSL*
Average barometric pressure	=	11.33	psia*	78.14	kPa*

II. PROCESS PARAMETERS:

Avg net sludge yield (bio+inerts)	=	1,057	lbs/d based on BODr*	479	kg/day
Required aerobic mass	=	10,869	lbs MLSS		kg MLSS
Required aerobic volume	=	0.37	MG	1,409	m3
Aerated portion of cycle	=	45.0	%		
Required total SBR volume	=	0.83	MG	3,132	m3

III. SBR BASIN DESIGN:

Number of SBR basins	=	2			
If Rectangular Basins are used :					
Length/Width Ratio	=	1.00	: 1		
Length	=	50	ft	15.28	m
Width	=	50	ft	15.28	m
If Round Tanks are used :					
Diameter	=	57	ft	17.25	m
Normal Top Water Level	=	22.0	ft	6.71	m
Nominal Bottom Water Level	=	18.7	ft	5.69	m
Total Volume in SBR's	=	0.83	MG	3,132	m^3
Total Retention Time in SBR's	=	39.7	Hours		
		1.65	Days		

*Notes assumed values, which may need to be confirmed.

Private and Confidential

IV. OXYGEN REQUIREMENT:

lbs. O2/lb. BOD removed	=	1.34		1.34	kg O2/kg
lbs. O2/lb. TKN oxidized	=	4.60		4.60	kg O2/kg
lbs. O2/lb. NO3x denitrified	=	-2.86	(Denite efficiency = 80%)	-2.86	kg O2/kg
Actual Oxygen Required, AOR	=	2,056	lbs./Day	932	kg/Day
DESIGN AOR	=	**2,056**	**lbs. O2/Day**	**932**	**kg O2/Day**

Convert Process, or Actual Oxygen Requirement (AOR), to Standard Oxygen (SOR) :

Conversion Formula from ASCE Manual of Practice :

$$SOR = \frac{AOR * Cs}{a * (ßCsd - DO) * Ø^{(T-20)}}$$

Where:

Cs = DO saturation at Std Conditions
= 9.07*(1+0.4*D/34)
=11.45 mg/l

Csd = DO saturation at design conditions
Csd = Cst*(Fe+0.4*D/34)
where : Cst = DO saturation at liquid Temp & 1 sea level
Cst = 9.07 mg/l
Fe = 0.77 Elevation Factor

Therefore, Csd = 9.33 mg/l

Alpha, a	= 0.85 *	SWD, D	= 22.0 ft
D.O., mg/l	= 2.0 mg/l	Beta, ß	= 0.95 *
Liquid Temp, T	= 20 °C	Theta, Ø	= 1.024

Therefore:

Standard Oxygen Required, SOR = 4,034 lbs. O2/Day

V. PROCESS DESIGN:

CYCLE TIMES

No. of batches/day/SBR	=	4	per SBR		
Maximum Fill time	=	3.0	Hours per basin		
Fill time at ADF	=	3.0	Hours		
Anoxic Fill time	=			1.5 Hours	*50% of Fill is anoxic.*
Aerated Fill	=			1.5 Hours	*45% of Cycle is aerated.*
React time	=	1.2	Hours		
Settle time	=	1.00	Hours		
Decant time	=	0.60	Hours		
Idle time	=	0.20	Hours		
Complete Cycle time	=	6.0	Hours per basin		

*Notes assumed values, which may need to be confirmed.

Private and Confidential

VI. AERATION SYSTEM DESIGN:

Aerator elevation	=	2.50	ft	0.76	m
Nozzle Cant	=	30	º		
Avg aerator submergence	=	19.04	ft	5.80	m
Total aeration time	=	2.70	Hours/cycle		
	=	10.80	Hours/Basin/Day		
SOR for aeration design	=	187	lb/hr/basin	85	kg/hr/basin
Design gassing rate	=	43.8	SCFM/jet	74.5	Nm³/hr/jet
Site gassing rate	=	50.7	ICFM/jet	86.2	m³/hr/jet
Absorption efficiency	=	25.7	%		
Design air flow	=	701	SCFM	1,192	Nm³/hr
Jets required per basin	=	16	Model 40 Jets		
Jet headers per basin	=	1	Type : Bi-Directional		
			Orientation : Length		
Jets per header	=	16	Model 40 Jets		

VII. BLOWER DESIGN CALCULATIONS:

Operating blowers	=	1	per aerating basin		
Type of Blowers :	=	Rotary, Positive Displacement			
Total Number of Blowers	=	2	(1) Duty, (1) Stand-by		
Air flow per blower	=	701	SCFM	1,192	Nm³/hr
Inlet losses	=	0.30	psig *	2.07	kPa (gauge) *
Net inlet pressure	=	11.03	psia	76.07	kPa (absolute)
Discharge piping losses	=	0.70	psig *	4.83	kPa (gauge) *
Static head + Aerator loss	=	8.34	psig average	57.52	kPa (gauge)
	=	8.54	psig @ Max. WL	58.89	kPa (gauge)
	=	7.10	psig @ Min. WL	48.97	kPa (gauge)
Total discharge pressure	=	9.34	psig Average	64.41	kPa (gauge)
		9.54	psig Maximum	65.79	kPa (gauge)
		8.10	psig Minimum	55.87	kPa (gauge)
Design ambient temp.	=	95	°F Maximum	35.0	°C
		0	°F Minimum	-17.8	°C

*Notes assumed values, which may need to be confirmed.

Private and Confidential

Site air flow required	=	982	ICFM Average	1,669	m³/hr
Equiv. sea level pressure	=	12.87	psig Average	88.71	kPa (gauge)
Nominal blower efficiency	=	64	% *		
BHp per blower	=	48.5	BHp/Blower	36.2	BkW
				38.5	kW @ 94% ME

VIII. PUMP DESIGN CALCULATIONS:

Number of pumps	=	1	per basin		
Type of Pumps :	= Dry Pit Centrifugal				
Total number of pumps	=	2			
Flow per pump	=	2,929	GPM	665.3	m³/hr
Required jet head	=	17.0	ft	5.18	m
System headloss	=	4.0	ft *	1.22	m*
Total pump head	=	21.0	ft	6.40	m
Assumed pump efficiency	=	76	% *		
BHp per pump	=	20.4	BHp/Pump	15.2	BkW
				16.2	kW @ 94% ME

IX. AERATION SYSTEM SUMMARY:

Standard Oxygen Required	=	4,034	lbs./Day	1,829	kg/Day
Avg. BHp for 24 hrs.	=	62	BHp**	49	kW
Assume Cost of Power	=	0.06	$/kW		
Max. Annual Cost of Power**	=	$25,176	assuming 94% motor efficiencies		

** *Actual power draw is typically less due to Demand-Proportional aeration process control*

X. DECANTER SIZING:

Cycles per day	=	8.0			
Volume per decant	=	62,500	Gallons at ADF	237	m³
		62,500	Gallons Decantable	237	m³
Decant time	=	0.60	Hours		
Average decant flow	=	1,736	GPM	394.3	m³/hr
Decanters per basin	=	1			
Flow per decanter	=	1,736	GPM	394.3	m³/hr

XI. PHOSPHORUS REMOVAL:

BOD vs Phosphorus :

Assume TSSi inert fraction is as shown under 'DESIGN PARAMETERS'.

Check BOD to P ratios :

Based on total influent values : BODi:P = 35:1

Based on soluble influent values : SBODi:P = 23:1

Approximate mg BODi/mg P required = 29:1 at oxic SRT selected

Assuming only bio-P removal :

Effluent P conc. achievable biologically = < 1 mg/l

*Although an adequate BODi:P ratio may exist to achieve desired effluent P limits, we recommend a chemical backup system for any P limit <2.0 mg/l

XII. ALKALINITY REQUIREMENT CALCULATIONS:

Assume waste biosolids contain 10% N. Also, 7.14 mg/l alkalinity per 1 mg/l nitrate generated and 3.57 mg/l alkalinity recovered per 1 mg/l nitrate denitrified.

Total TKN oxidized to nitrate	=	28	mg/l	mg/l @ TKNi - (0.10*dXv)		
	or =	118	lbs./Day		54	kg/Day
Alkalinity req'd for nitrification	=	202	mg/l			
Alkalinity recovered from denite	=	81	mg/l	80 % *Denitrification Eff.*		
Alkalinity lost in process	=	121	mg/l			
Influent alkalinity concentration	=	200	mg/l *			
Alkalinity as buffer	=	75	mg/l			
Additional alkalinity required	=	0	mg/l *			

XIII. ULTIMATE POST EQ SIZING:

Batches per Day	=	8			
Batch Size for Phase III 2 MGD	=	125,000	Gallons	473	m³
Suggested Safety Factor	=	2			
Suggested EQ Basin Volume	=	0.25	MG	946	m³
HRT		0.50	Days @ Phase I ADF (0.5 MGD)	12.0	Hours
Top Water Level	=	15	ft	4.57	m

If Rectangular Basins are used :

Length/Width Ratio	=	1.0	: 1		
Length	=	47	ft	14.39	m
Width	=	47	ft	14.39	m

If Round Tanks are used :

Diameter	=	53	ft	16.24	m

PHASE II DESIGN CALCULATIONS

Omniflo® Sequencing Batch Reactor Design Calculations

Project:	Santa Fe County WWTP	Date:	12-Dec-2016
Engineer:	HDR	Designer:	N. Barczewski

4 Basin SBR System with Jets - Phase II

I. DESIGN PARAMETERS:

Influent & Effluent Characteristics

Average Daily Flow (ADF)	=	1.00	MGD	3,785	m3/day
Peak Daily Flow	=	2.00	MGD	7,570	m3/day
BOD to SBR	=	323	mg/l *		
	=	2,694	lbs/day	1,222	kg/day
Effluent BOD	<	10	mg/l		
TSS to SBR	=	215	mg/l *		
	=	1,793	lbs/day	813	kg/day
Inert TSS fraction	=	40	% *		
Effluent TSS	<	10	mg/l		
Influent dissolved solids, TDS	=	500	mg/l *		
Influent NH4-N	=	34	mg/l *		
	=	280	lbs/day	127	kg/day
Influent TKN	=	42	mg/l		
	=	350	lbs/day	159	kg/day
Effluent NH3-N	<		not required	Summer	
	<		not required	Winter	
Effluent Total Nitrogen	<	5	mg/l		
			Assumed standard uninhibited nitrification rate*		
Influent Phosphorus	=	9	mg/l		
	=	77	lbs/day	35	kg/day
Effluent Phosphorus	<	1.0	mg/l with Chemical addition		
Min. Water Temperature	=	12 °C			
Max. Water Temperature	=	20 °C			

*Notes assumed values, which may need to be confirmed.

Private and Confidential

Omniflo® Sequencing Batch Reactor Design Calculations

Project:	Santa Fe County WWTP	Date:	12-Dec-2016
Engineer:	HDR	Designer:	N. Barczewski

Reactor & Process Characteristics

Design MLSS	=	3,500	mg/l @ Top Water Level		
		4,123	mg/l @ Bottom Water Level		
Hydr. Retention Time provided	=	1.65	Days	39.7	Hours
Aerobic Sludge Age (SRTox)	=	10.3	Days min. SRTox		
System SRT	=	22.9	Days		
Biosolids yield factor	=	0.54	gVSS/gBODr/d		
Aerobic or Oxic F:M	=	0.12	gBOD/gMLSS/d		
System F:M	=	0.06	gBOD/gMLSS/d		
Elevation	=	7,000	ft. MSL*	2133.6	m MSL*
Average barometric pressure	=	11.33	psia*	78.14	kPa*

II. PROCESS PARAMETERS:

Avg net sludge yield (bio+inerts)	=	2,113	lbs/d based on BODr*	958	kg/day
Required aerobic mass	=	21,738	lbs MLSS		kg MLSS
Required aerobic volume	=	0.74	MG	2,819	m3
Aerated portion of cycle	=	45.0	%		
Required total SBR volume	=	1.65	MG	6,264	m3

III. SBR BASIN DESIGN:

Number of SBR basins	=	4			
If Rectangular Basins are used :					
Length/Width Ratio	=	1.00	: 1		
Length	=	50	ft	15.28	m
Width	=	50	ft	15.28	m
If Round Tanks are used :					
Diameter	=	57	ft	17.25	m
Normal Top Water Level	=	22.0	ft	6.71	m
Nominal Bottom Water Level	=	18.7	ft	5.69	m
Total Volume in SBR's	=	1.65	MG	6,264	m^3
Total Retention Time in SBR's	=	39.7	Hours		
		1.65	Days		

*Notes assumed values, which may need to be confirmed.

Private and Confidential

IV. OXYGEN REQUIREMENT:

lbs. O2/lb. BOD removed	=	1.34		1.34	kg O2/kg
lbs. O2/lb. TKN oxidized	=	4.60		4.60	kg O2/kg
lbs. O2/lb. NO3x denitrified	=	-2.86	(Denite efficiency = 80%)	-2.86	kg O2/kg
Actual Oxygen Required, AOR	=	4,111	lbs./Day	1,865	kg/Day
DESIGN AOR	=	**4,111**	**lbs. O2/Day**	**1,865**	**kg O2/Day**

Convert Process, or Actual Oxygen Requirement (AOR), to Standard Oxygen (SOR) :

Conversion Formula from ASCE Manual of Practice :

$$SOR = \frac{AOR * Cs}{a * (ßCsd - DO) * Ø^{(T-20)}}$$

Where:

Cs = DO saturation at Std Conditions
= 9.07*(1+0.4*D/34)
=11.45 mg/l

Csd = DO saturation at design conditions
Csd = Cst*(Fe+0.4*D/34)
where : Cst = DO saturation at liquid Temp & 1 sea level
Cst = 9.07 mg/l
Fe = 0.77 Elevation Factor

Therefore, Csd = 9.33 mg/l

Alpha, a	= 0.85 *	SWD, D	= 22.0 ft
D.O., mg/l	= 2.0 mg/l	Beta, ß	= 0.95 *
Liquid Temp, T	= 20 °C	Theta, Ø	= 1.024

Therefore:

Standard Oxygen Required, SOR = 8,068 lbs. O2/Day

V. PROCESS DESIGN:

CYCLE TIMES

No. of batches/day/SBR	=	4	per SBR	
Maximum Fill time	=	1.5	Hours per basin	
Fill time at ADF	=	1.5	Hours	
Anoxic Fill time	=		1.5 Hours	*100% of Fill is anoxic.*
Aerated Fill	=		0.0 Hours	*45% of Cycle is aerated.*
React time	=	2.7	Hours	
Settle time	=	1.00	Hours	
Decant time	=	0.60	Hours	
Idle time	=	0.20	Hours	
Complete Cycle time	=	6.0	Hours per basin	

*Notes assumed values, which may need to be confirmed.

Private and Confidential

VI. AERATION SYSTEM DESIGN:

Aerator elevation	=	2.50	ft	0.76	m
Nozzle Cant	=	30	º		
Avg aerator submergence	=	19.50	ft	5.94	m
Total aeration time	=	2.70	Hours/cycle		
	=	10.80	Hours/Basin/Day		
SOR for aeration design	=	187	lb/hr/basin	85	kg/hr/basin
Design gassing rate	=	42.6	SCFM/jet	72.4	Nm³/hr/jet
Site gassing rate	=	49.2	ICFM/jet	83.6	m³/hr/jet
Absorption efficiency	=	26.5	%		
Design air flow	=	681	SCFM	1,157	Nm³/hr
Jets required per basin	=	16	Model 40 Jets		
Jet headers per basin	=	1	Type : Bi-Directional		
			Orientation : Length		
Jets per header	=	16	Model 40 Jets		

VII. BLOWER DESIGN CALCULATIONS:

Operating blowers	=	1	per aerating basin		
Type of Blowers :	=	Rotary, Positive Displacement			
Total Number of Blowers	=	3	(2) Duty, (1) Stand-by		
Air flow per blower	=	681	SCFM	1,157	Nm³/hr
Inlet losses	=	0.30	psig *	2.07	kPa (gauge) *
Net inlet pressure	=	11.03	psia	76.07	kPa (absolute)
Discharge piping losses	=	0.70	psig *	4.83	kPa (gauge) *
Static head + Aerator loss	=	8.54	psig average	58.89	kPa (gauge)
	=	8.54	psig @ Max. WL	58.89	kPa (gauge)
	=	7.10	psig @ Min. WL	48.97	kPa (gauge)
Total discharge pressure	=	9.54	psig Average	65.79	kPa (gauge)
		9.54	psig Maximum	65.79	kPa (gauge)
		8.10	psig Minimum	55.87	kPa (gauge)
Design ambient temp.	=	95	°F Maximum	35.0	°C
		0	°F Minimum	-17.8	°C

*Notes assumed values, which may need to be confirmed.

Site air flow required	=	954	ICFM Average	1,621	m³/hr
Equiv. sea level pressure	=	13.14	psig Average	90.63	kPa (gauge)
Nominal blower efficiency	=	64	% *		
BHp per blower	=	47.9	BHp/Blower	35.7	BkW
				38.0	kW @ 94% ME

VIII. PUMP DESIGN CALCULATIONS:

Number of pumps	=	1	per basin		
Type of Pumps :	= Dry Pit Centrifugal				
Total number of pumps	=	4			
Flow per pump	=	2,929	GPM	665.3	m³/hr
Required jet head	=	17.0	ft	5.18	m
System headloss	=	4.0	ft *	1.22	m*
Total pump head	=	21.0	ft	6.40	m
Assumed pump efficiency	=	76	% *		
BHp per pump	=	20.4	BHp/Pump	15.2	BkW
				16.2	kW @ 94% ME

IX. AERATION SYSTEM SUMMARY:

Standard Oxygen Required	=	8,068	lbs./Day	3,659	kg/Day
Avg. BHp for 24 hrs.	=	123	BHp**	98	kW
Assume Cost of Power	=	0.06	$/kW		
Max. Annual Cost of Power**	=	$49,935	assuming 94% motor efficiencies		

** *Actual power draw is typically less due to Demand-Proportional aeration process control*

X. DECANTER SIZING:

Cycles per day	=	16.0			
Volume per decant	=	62,500	Gallons at ADF	237	m³
		62,500	Gallons Decantable	237	m³
Decant time	=	0.60	Hours		
Average decant flow	=	1,736	GPM	394.3	m³/hr
Decanters per basin	=	1			
Flow per decanter	=	1,736	GPM	394.3	m³/hr

XI. PHOSPHORUS REMOVAL:

BOD vs Phosphorus :

Assume TSSi inert fraction is as shown under 'DESIGN PARAMETERS'.
Check BOD to P ratios :

Based on total influent values : BODi:P = 35:1
Based on soluble influent values : SBODi:P = 23:1

Approximate mg BODi/mg P required = 29:1 at oxic SRT selected
Assuming only bio-P removal :

Effluent P conc. achievable biologically = < 1 mg/l

*Although an adequate BODi:P ratio may exist to achieve desired effluent P limits, we recommend a chemical backup system for any P limit <2.0 mg/l

XII. ALKALINITY REQUIREMENT CALCULATIONS:

Assume waste biosolids contain 10% N. Also, 7.14 mg/l alkalinity per 1 mg/l nitrate generated and 3.57 mg/l alkalinity recovered per 1 mg/l nitrate denitrified.

Total TKN oxidized to nitrate	=	28	mg/l	mg/l @ TKNi - (0.10*dXv)		
	or =	236	lbs./Day		107	kg/Day
Alkalinity req'd for nitrification	=	202	mg/l			
Alkalinity recovered from denite	=	81	mg/l	80 % *Denitrification Eff.*		
Alkalinity lost in process	=	121	mg/l			
Influent alkalinity concentration	=	200	mg/l *			
Alkalinity as buffer	=	75	mg/l			
Additional alkalinity required	=	0	mg/l *			

XIII. ULTIMATE POST EQ SIZING

Batches per Day	=	16			
Batch Size for Phase III 2 MGD	=	125,000	Gallons	473	m³
Suggested Safety Factor	=	2			
Suggested EQ Basin Volume	=	0.25	MG	946	m³
HRT		0.25	Days @ Phase II ADF (1 MGD)	6.0	Hours
Top Water Level	=	15	ft	4.57	m

If Rectangular Basins are used :

Length/Width Ratio	=	1.0	: 1		
Length	=	47	ft	14.39	m
Width	=	47	ft	14.39	m

If Round Tanks are used :

Diameter	=	53	ft	16.24	m

PLAN VIEW

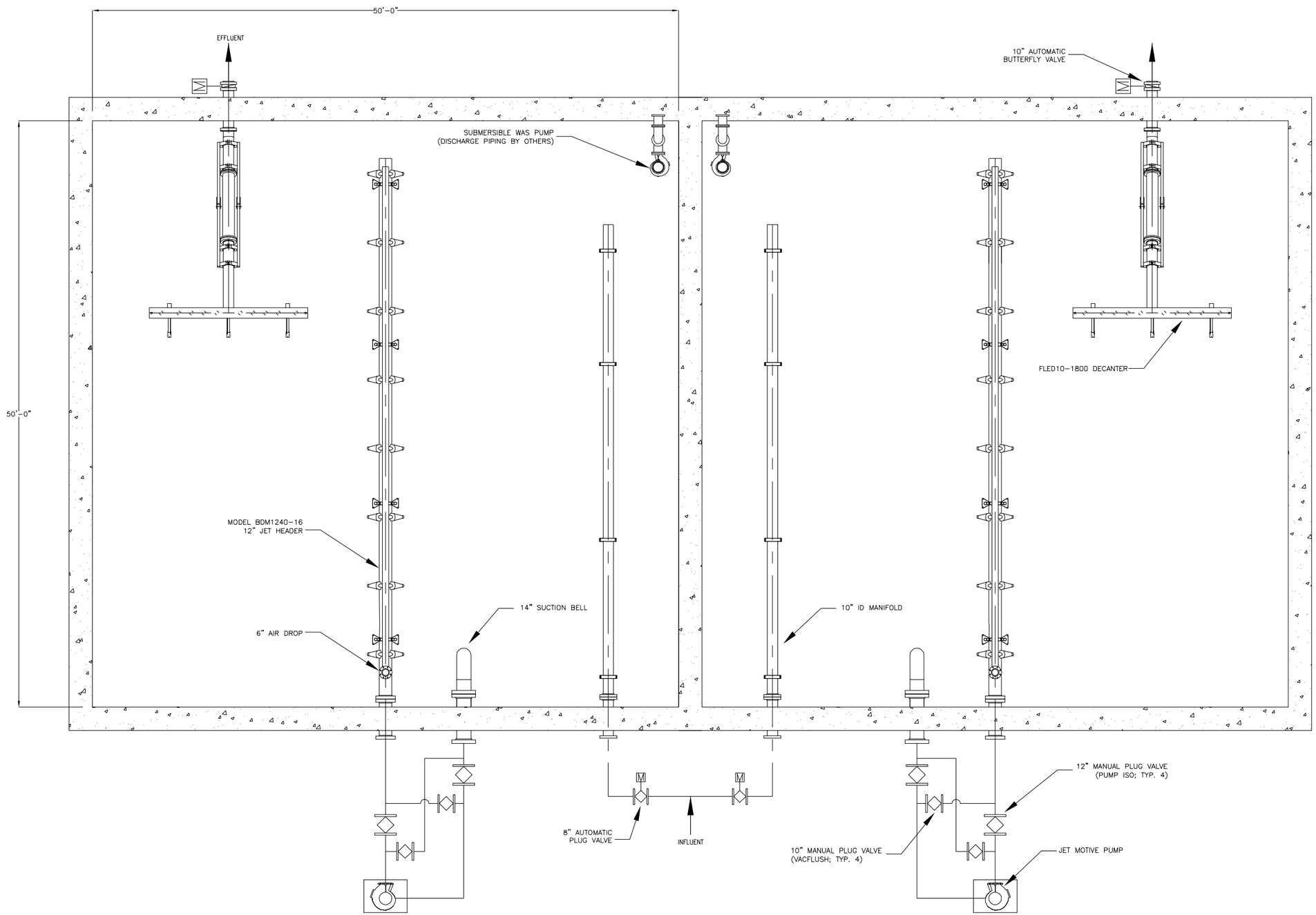

PRELIMINARY
NOT TO BE USED FOR CONSTRUCTION PURPOSES

REV	DESCRIPTION	DATE	DWN	CHKD	APVD	ECN

COMPANY CONFIDENTIAL
DOCUMENT AND ALL INFORMATION CONTAINED HEREIN ARE THE PROPERTY OF EVOQUA AND/OR ITS AFFILIATES. THE DESIGN CONCEPTS AND INFORMATION CONTAINED HEREIN ARE PROPRIETARY TO EVOQUA AND ARE SUBMITTED IN CONFIDENCE. THEY ARE NOT TRANSFERABLE AND MUST BE USED ONLY FOR THE PURPOSE FOR WHICH THE DOCUMENT IS EXPRESSLY LOANED. THEY MUST NOT BE DISCLOSED, REPRODUCED, LOANED OR USED IN ANY OTHER MANNER WITHOUT THE EXPRESS WRITTEN CONSENT OF EVOQUA. IN NO EVENT SHALL THEY BE USED IN ANY MANNER DETRIMENTAL TO THE INTEREST OF EVOQUA. ALL PATENT RIGHTS ARE RESERVED. UPON THE DEMAND OF EVOQUA, THIS DOCUMENT, ALONG WITH ALL COPIES AND EXTRACTS, AND ALL RELATED NOTES AND ANALYSES, MUST BE RETURNED TO EVOQUA OR DESTROYED, AS INSTRUCTED BY EVOQUA. ACCEPTANCE OF THE DELIVERY OF THIS DOCUMENT CONSTITUTES AGREEMENT TO THESE TERMS.

DESIGNER	NAB	12/12/16
CHECKER		
ENGINEER		
MANAGER		
FILE:		
SCALE: 1/4" = 1'-0"		

TITLE GENERAL ARRANGEMENT PLAN VIEW

CLIENT SANTA FE COUNTY, NM
HDR

evoqua WATER TECHNOLOGIES
WATER TECHNOLOGIES
WAUKESHA, WI
262-547-0141

PROJECT	CODE	DRAWING	SHEET	REV
–	SBR	101	1 OF 1	

STD: BORDER-0106-24X36D1 | INTL REF: | 12/12/2016 – 4:36 PM | BAR = 1" AT PLOT SCALE

OMNIFLO® INFORMATION

OMNIFLO® SEQUENCING BATCH REACTOR (SBR) JET TECH SBR TECHNOLOGY

PROVEN PERFORMANCE UNDER DEMANDING CONDITIONS

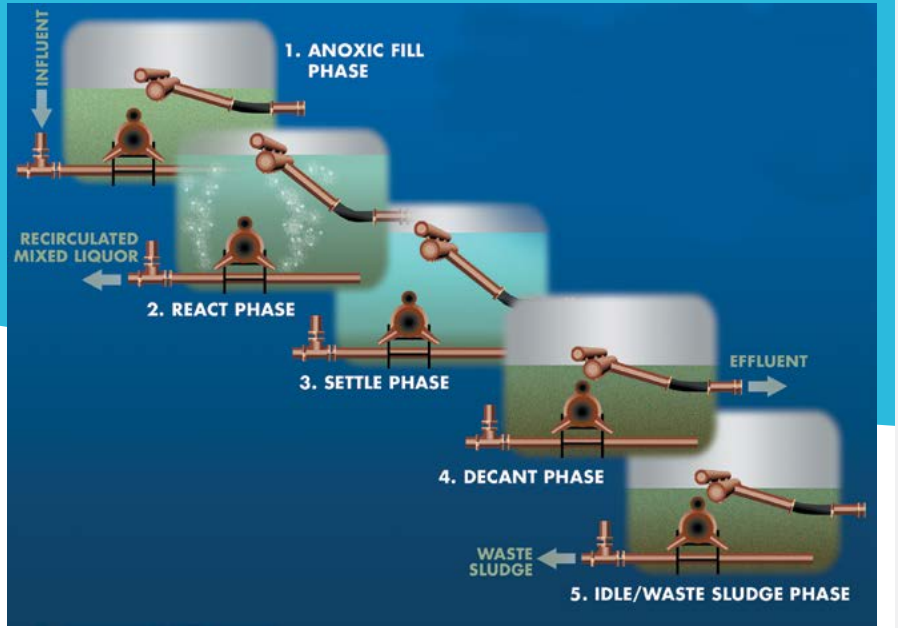

The OMNIFLO® SBR Cycle effectively utilizes a single reactor

OMNIFLO® SBR Benefits

- Biological Nutrient Removal (BNR)
- High quality effluent at widely varying flows and loadings
- No sludge recycle system
- Perfect quiescent settling
- Optimum energy efficiency
- No clarifiers
- No short circuiting
- Small footprint
- Flexible design
- Retrofits of existing tanks
- Biological phosphorous removal

SUPERIOR TECHNOLOGY IN WASTEWATER TREATMENT

The OMNIFLO® Sequencing Batch Reactor (SBR) utilizes state-of-the-art equipment and controls to deliver superior performance under the most demanding conditions, while offering important benefits to plant owners and operators.

Operating Principals

The OMNIFLO SBR is a fill-and-draw, non-steady state activated sludge process in which one or more reactor basins are filled with wastewater during a discrete time period, and then operated in a batch treatment mode. In a single reactor basin the OMNIFLO SBR accomplishes equalization, aeration, and clarification in a timed sequence. In a conventional continuous flow process, multiple structures are required to obtain the same treatment objectives.

A single cycle for each reactor consists of five discrete periods, Fill, React, Settle, Decant, and Idle. The OMNIFLO SBR system is unique in its ability to handle influent flows and a wide range of organic loads and industrial pollutants. The OMNIFLO SBR is ideally suited when nitrification, denitrification and biological phosphorous removal are necessary.

The operating strategy provides process control over a wide range of flows. By varying the operating strategy, aerobic or anoxic conditions can be achieved to encourage the growth of desirable microorganisms. Microorganisms can also be acclimated to a wide range of industrial and chemical processing wastes.

OMNIFLO® SBR Cycle

Anoxic Fill Phase

During Anoxic fill influent is distributed throughout the settled sludge through the Influent Distribution/Sludge Collection Manifold (ID/SC) and biodegration is initiated. The reactor is filled with wastewater and fill can be aerated, anoxic, or a combination of aerated and anoxic.

React Phase

Influent flow is terminated. Aeration and mixing continue in the full reactor until complete biodegration is achieved.

Settle Phase

Aeration and mixing are turned off and perfect quiescent conditions allow the biomass to settle, leaving the treated supernatant above.

Decant Phase

Effluent is removed from just below the liquid surface by the Floating Solids Excluding Decanter.

Idle/Waste Sludge Phase

The reactor waits to receive flow. Settled sludge is drawn through the ID/SC and removed from the SBR reactor.

These types of state-of-the-art control strateies meet specific needs.

OMNIFLO® SBR Control Features

- Reduction of operator time (fully automated)
- Consistent, efficient process
- Additional PC/SCADA systems (optional)
- Equipment failure alarms and automated responses
- Phone modem for remote process service capability (standard)
- Continuous liquid level indication (standard on flow proportional)
- D.O. control (optional)
- Surge protection
- Flexibility for operator to change set points

OMNIFLO® SBR System Controls

The heart of the OMNIFLO® SBR is the control system. The control system focuses on an operating strategy that optimizes the SBR process capabilities while minimizing required operator time and decision making. We currently offer three types of control systems:

Flow Proportional Control – This state-of-the-art control system features a PLC with a simple to use operator interface. Pressure transducers are used to continuously monitor the rate of fill in each SBR reactor. As the flow changes, the aeration time is adjusted proportional to the flow. This strategy ensures that oxygen is available when needed, but does not waste power during low flow periods. The flow proportional control system also provides automatic alarm and failure response. For example, if an influent valve fails to open, the influent pump station would be pumping against a closed valve. This feature would place the affected reactor out of service and divert the flow to another in-service basin until the failure is manually acknowledged and corrected. The controls adjust the operating strategy and setpoints to provide optimal treatment with the remaining reactors.

~~**Slug Feed Control** – The slug feed control strategy utilizes intermittent, rapid fill periods, which maximizes available aeration time during each cycle. This PLC based control system is applicable for treatment plants that have adequate influent holding capacity (influent equalization basin) prior to the SBR.~~

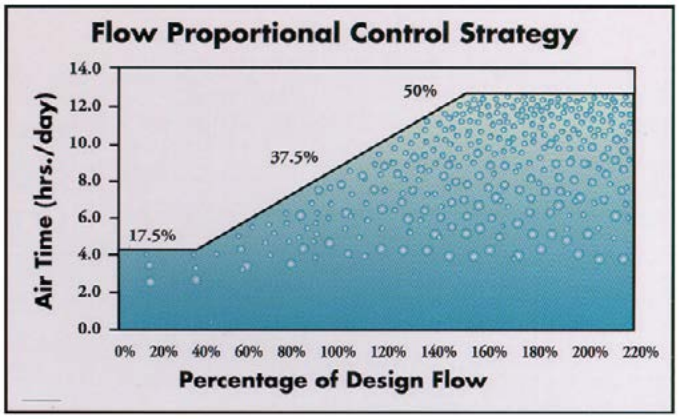

Aeration time is adjusted proportionally to flow to ensure the right amount of oxygen is available when needed.

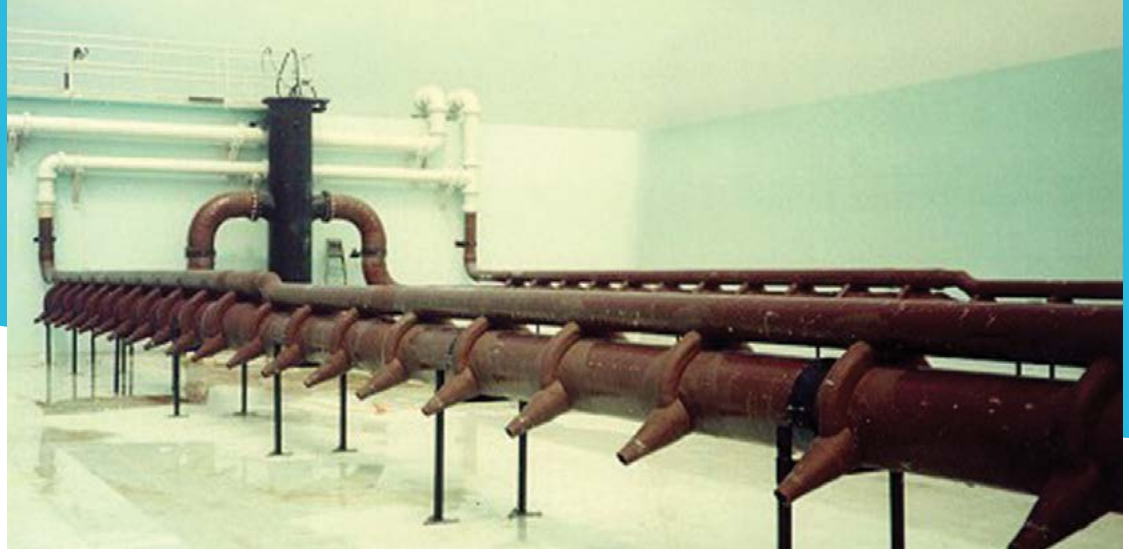

VARI-CANT® Jet Aeration System

SUPERIOR EQUIPMENT FOR PROCESS PERFORMANCE

Jet Aeration Desgns

The VARI-CANT® jet aeration system from Evoqua utilizes proven principles of jet aeration, combined with state-of-the-art design and materials, resulting in a system with superior performance, efficiency and trouble-free operation. The jet aeration system operates by intermixing air with a motive liquid and injecting the stream into the wastewater. The motive liquid – recirculated mixed liquor – is discharged from an inner nozzle into an outer nozzle. Compressed atmospheric air is introduced, and sheared into tiny bubbles which are entrained in the motive liquid stream and injected back into the basin.

Diffused Aeration Designs

We offer both fine and coarse bubble SBR installations with fixed and retrievable diffuser assemblies available. Most fine and coarse bubble designs used in SBR's require some sort of mixing device to achieve complete mix in the basin during aeration. OMNIFLO® SBR systems are designed without a mixing device when the density of the diffusers achieve full floor coverage and the ID/SC manifold is used to distribute the influent evenly across the basin floor. Reliable and durable floating surface aerators and mixers are also available for special applications with SBR technology.

AERATION/ MIXING OPTIONS

- Jets with submersible or dry pit pumps
- Full floor coverage with fine & coarse bubble diffusers
- High-speed floating aerators
- Fixed fine and coarse bubble diffusers with mixers
- Mixers
- Retrievable fine and coarse bubble diffusers with mixers

OMNIFLO® SBR with Fine Bubble Diffusers

OMNIFLO® SBR with Fine Bubble Diffusers

Influent distribution manifold

Influent Distribution/ ~~Sludge Collection Manifold~~ (ID/SC)

The ID/SC manifold allows intimate contact of the influent (food) with the settled biomass in the sludge blanket throughout the length of the basin. During this time, the soluble BOD is absorbed and stored by the facultative biomass until air is received to metabolize the food. The selective pressures exerted on the biomass assists in good settling and facultative organisms to predominate. ~~The ID/SC manifold is also used to withdraw sludge from multiple points across the basin floor. This yields the thickest sludge possible, reducing side stream sludge treatment operation and maintenance.~~ Finally, the ID/SC prevents disruption of the sludge blanket during Filled Decant periods necessitated by high flow rates or emergency single tank operation.

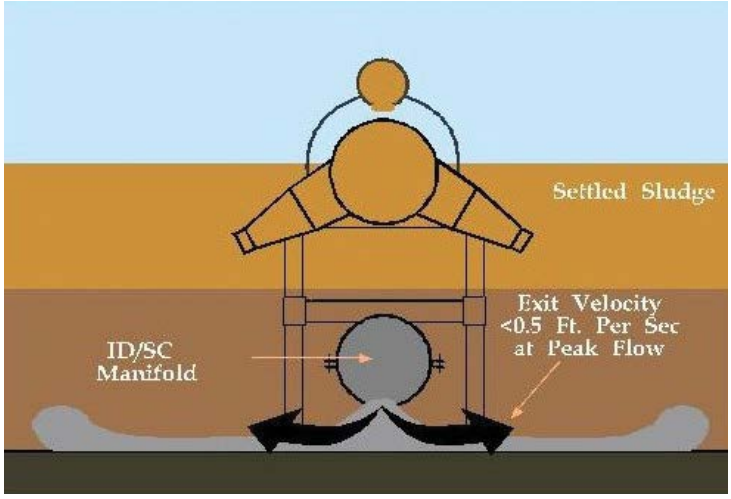

OMNIFLO® SBR KEY ADVANTAGES

- Licensed plant operators available for customer service 24 hrs/day, 7 days/week
- Choice of aeration / mixing devices
- Influent distribution / sludge collection manifold (ID/SC)
- Non-Electro mechanical solids excluding floating decanter
- State-of-the-art controls
- Retrofits available for any basin geometry
- Experience, Reputation, & Reliability

Floating solids excluding decanter

Draw tube with solids excluding plug valves.

Floating Solids Excluding Decanter

The Jet Tech™ floating solids excluding decanter is the only true solids excluding decanter in the industry that does not utilize electro-mechanical equipment in the basin. This state-of-the-art design utilizes multiple orifices to keep velocities at a minimum, and pulls treated effluent from below the surface to eliminate the possibility of entraining floatables. The decanters are constructed of high quality, durable, corrosive resistant materials with a manual override that is unique in the industry and requires no routine maintenance.

~~Fixed Decanter~~

~~The fixed decanter operates similarly to the floating decanter, except it is attached to the basin wall at a fixed elevation below the bottom water level. This eliminates the flexible hose connector, knee brace and decanter rest support. In SBR systems, the fixed decanter requires the availability of a longer settling time since the solids must settle below the bottom water level before decanting.~~

~~Non Solids Excluding Decanter~~

~~The non solids excluding decanter is constructed similarly to the solids excluding decanter, however it does not contain the spring loaded valves. This type of decanter is installed in applications when it is not important if some solids are left in the decanted effluent.~~

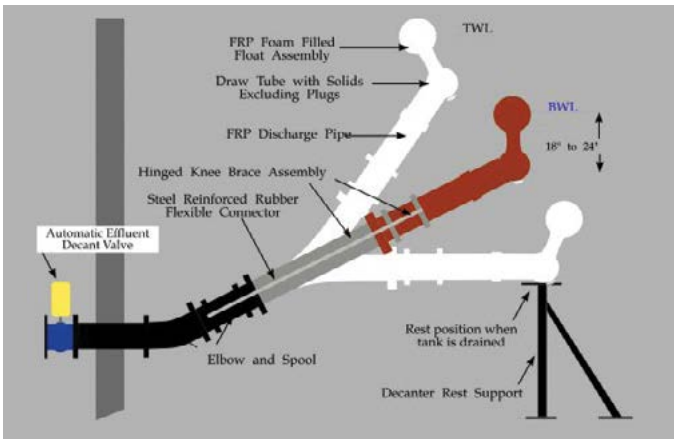

Jet Tech™ decanters are unique in the industry and require no routine maintenance.

DECANTER ADVANTAGES

- Innovative designs, engineered specifically for each project.
- Simple safe operation
- No in-basin electromechanical devices requiring maintenance
- Consistent quality performance
- Years of reliable operating experience in the field with installations worldwide

The 2.4 MGD Pima Utility Wastewater Treatment Plant meets Title 22 effluent quality standards.

PROVEN TECHNOLOGY AND EXPERIENCE

Pima Utility

The Pima Utility Wastewater Treatment Plant located in a retirement community in Arizona was designed to treat 2.4 million gallons per day (MGD), and produce a high quality effluent with disinfection, low turbidity and nitrogen levels to meet Title 22 effluent quality standards. The rectangular process basins were designed to be low profile and covered for environmental aesthetics with mechanical equipment installed in an enclosed building to eliminate any noise.

Rahr Malting

The Rahr Malting Company located in Shakopee, MN is one of the world's largest malt producers. Since 1999, an OMNIFLO® SBR has been installed which has consistently met their wastewater treatment requirements. The Rahr Malting Co., also worked with the Minnesota Pollution Control Agency in cleaning up the river where the wastewater effluent is discharged to make sure oxygen consuming compounds were removed.

Fruitland, Maryland

The City of Fruitland, Maryland installed an OMNIFLO® SBR system to expand its capacity of its wastewater treatment plant and to meet the requirements for the Chesapeake Bay initiative. The OMNIFLO SBR system was selected because of its compact footprint and ability to achieve enhanced nutrient removal within a two-tank layout. This system also includes the patented VARI-CANT® Jet Aeration system from Evoqua as well.

OMNIFLO® SBR PRIMARY MARKETS

- Municipal
- Food & Beverage
- Pulp & Paper
- Petrochemical & Oil Refining
- Pharmaceutical
- Chemical / CPI
- Landfill /Leachate Applications
- Textile Industry

OMNIFLO® SBR installed at Rahr Malting

Fruitland, Maryland Wastewater Treatment Plant

Visit www.evoqua.com/omniflo to connect with an expert.

2607 N. Grandview Blvd, Suite 130, Waukesha, Wisconsin 53188

+1 (866) 926-8420 (toll-free) **+1 (978) 614-7233** (toll) **www.evoqua.com**

Jet Tech, OMNIFLO and VARI-CANT are trademarks of Evoqua, its subsidiaries or affiliates, in some countries. Equipment and features described are protected under U.S. Patents 6,244,574; 6,464,211; 7,243,912; 7,550,076; and 7,655,144.

All information presented herein is believed reliable and in accordance with accepted engineering practices. Evoqua makes no warranties as to the completeness of this information. Users are responsible for evaluating individual product suitability for specific applications. Evoqua assumes no liability whatsoever for any special, indirect or consequential damages arising from the sale, resale or misuse of its products.

© 2014 Evoqua Water Technologies LLC Subject to change without notice BC-SBR-BR-0914

EVOQUA FORTY-X DISC FILTER
BUDGET PROPOSAL

Project Name:	Santa Fe County, NM	Date:	12/13/2016
Proposal Number:	170072-A0		

Process Performance Requirements:

Avg. Daily Flow:	**0.5**	mgd	=	347 gpm
Peak Daily Flow:	**1**	mgd	=	694 gpm
Influent Avg. TSS:	**10**	mg/l		
Influent Peak TSS:	**10**	mg/l		
Effluent TSS:	**5**	mg/l		

Forty-X Filter Sizing and Selection:

Number of Filters:	**2**	(1 duty, 1 standby)
Filter Model Number:	**E1403T**	
Avg. Hydraulic Loading Rate:	**2.57**	gpm
Avg. Solids Loading Rate at Avg. Flow:	**0.31**	mg/l
Max Solids Loading Rate at Avg. Flow:	**0.31**	mg/l
Peak Hydraulic Loading Rate:	**5.15**	gpm
Avg. Solids Loading Rate at Peak Flow:	**0.62**	mg/l
Max Solids Loading Rate at Peak Flow:	**0.62**	mg/l

Forty-X Filter Specs:

Submergence:	**65%**	
Effective Filter Surface Area	**135**	ft^2 / filter
Drum Rotational Speed	**1-3**	rpm
Drum Drive Motor	**2**	Hp, 480V, 3ph, 60Hz
Backwash Pump	**38**	gpm at 100+ psi
Backwash Pump Motor	**5**	Hp, 480V, 3ph, 60Hz
Material of Construction:		
Filter Frame	**304**	**SS**
Central drum	**304**	**SS**
Sliding Cover	**304**	**SS**
Filter Cloth	**Polyester**	
Filter Panel Box	**ABS / PPE**	
Backwash Trough	**304**	**SS**
Spray Manifold	**304**	**SS**

Evoqua Additional Scope:

Each filter to have individual control panel (of Evoqua's standard design and components). Control Panel mounted by others.

Level probe for automatic backwash operation

Standard equipment spare parts including 7 filter panels and 10 spray nozzles

Equipment startup and operator training, 2 days on site, 1 trip

Supplied by Others

Civil construction and installation; including piping, concrete works, and electrical connections
Other instrumentations not described herein
Control Panel stands or mounting
Effluent/ Bypass Weirs
Equipment Access Platform or Grating
Equipment Freeze Protection
Any necessary bid bonding requirements
Influent feed pumps or influent isolation valves
Any other items not explicitly indicated in this proposal

Equipment Budget Pricing:

Two (2) Evoqua Forty-X Disc Filter and scope as defined above……. $ 280,000 US Dollars
F.O.B. Thomasville, Georgia. Freight is included. Budget is +/- 5%
Taxes and Duties are Not Included.
Price and delivery estimate valid only for 90 days from date of this proposal.

Delivery:

Submittals: 4-6 weeks from mutually agreed upon and signed contract for submittal delivery.
Equipment: 20-22 weeks from approved submittals for equipment delivery.

The scope of supply and pricing are based on Evoqua's standard equipment selection, standard terms of sale and warranty terms. Any variations from these standards may affect this budgetary quotation. Additionally, please note that this budgetary quotation is for review and informational purposes only and does not constitute an offer for acceptance.

BAR = 1" AT PLOT SCALE

DATA

1) 3 DISCS, 134 SQ FT
2) BACKWASH PUMP, 5 HP
3) BACKWASH RATE, 33 GPM @ 100+ PSI
4) DRIVE, 1.5 HP VFD
5) DRY WEIGHT, 6,800 LBS
6) OPERATING WEIGHT, 15,700 LBS
7) ALL FLANGES ARE 150 LB
8) UNIT IS SHIPPED FULLY ASSEMBLED

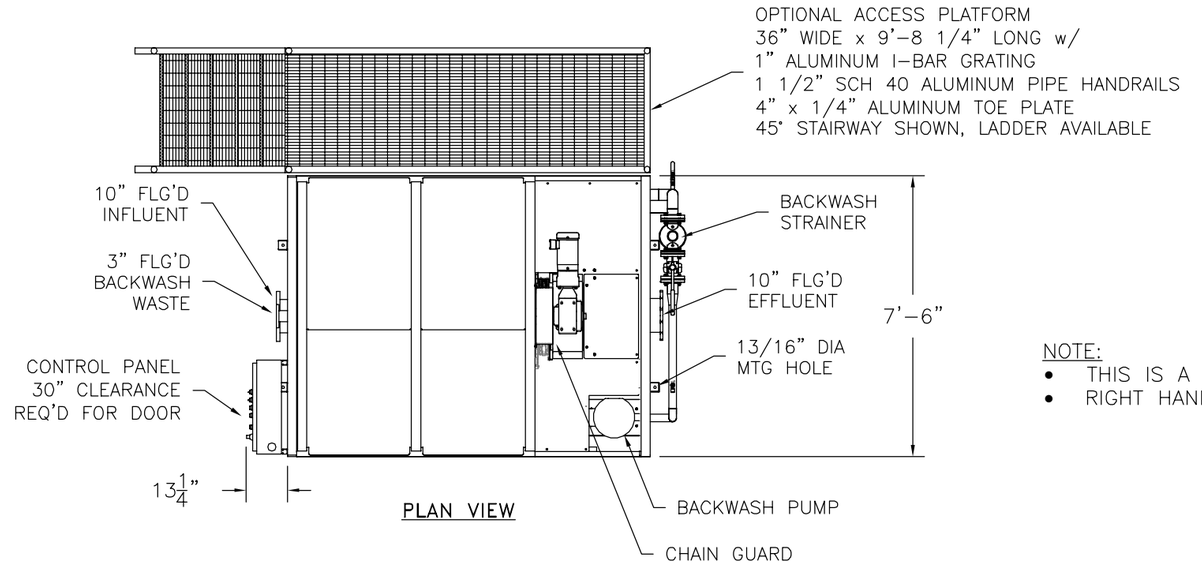

PLAN VIEW

NOTE:
- THIS IS A LEFT HAND UNIT.
- RIGHT HAND UNIT IS MIRROR IMAGE.

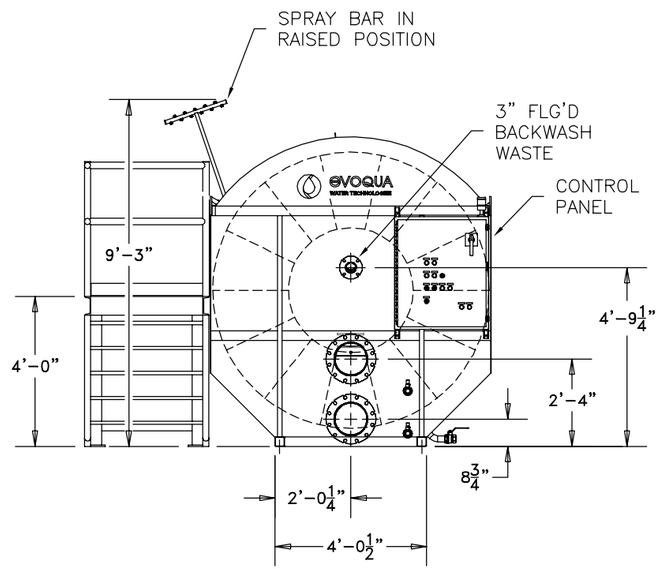

INFLUENT VIEW

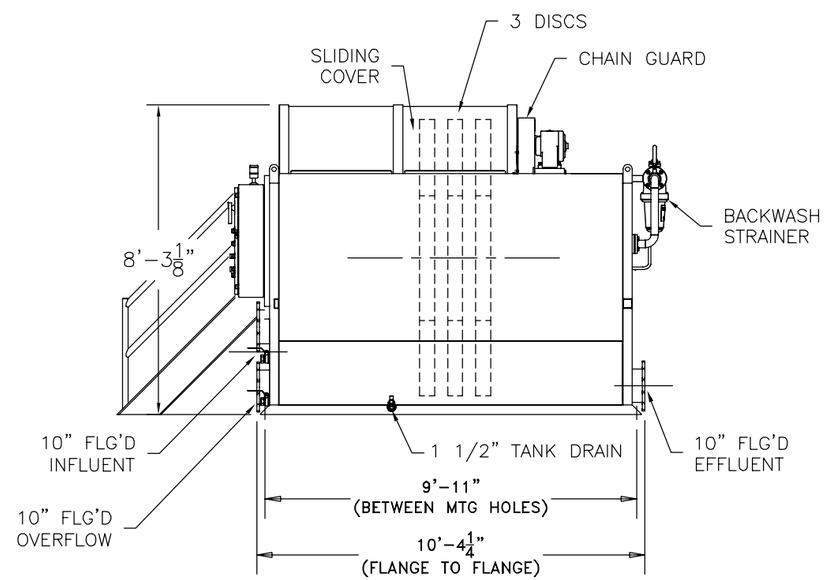

SIDE VIEW

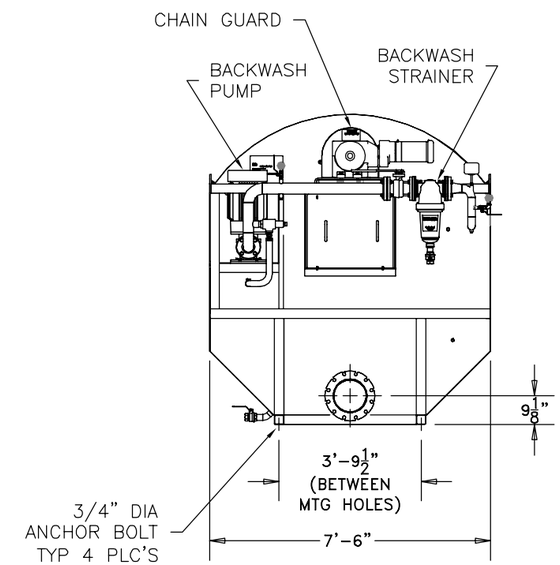

EFFLUENT VIEW

FOR INFORMATION ONLY
NOT FOR CONSTRUCTION

REV	DESCRIPTION	DATE	DWN	CHKD	APVD	ECN

COMPANY CONFIDENTIAL
DOCUMENT AND ALL INFORMATION CONTAINED HEREIN ARE THE PROPERTY OF EVOQUA AND/OR ITS AFFILIATES. THE DESIGN CONCEPTS AND INFORMATION CONTAINED HEREIN ARE PROPRIETARY TO EVOQUA AND ARE SUBMITTED IN CONFIDENCE. THEY ARE NOT TRANSFERABLE AND MUST BE USED ONLY FOR THE PURPOSE FOR WHICH THE DOCUMENT IS EXPRESSLY LOANED. THEY MUST NOT BE DISCLOSED, REPRODUCED, LOANED OR USED IN ANY OTHER MANNER WITHOUT THE EXPRESS WRITTEN CONSENT OF EVOQUA. IN NO EVENT SHALL THEY BE USED IN ANY MANNER DETRIMENTAL TO THE INTEREST OF EVOQUA. ALL PATENT RIGHTS ARE RESERVED. UPON THE DEMAND OF EVOQUA, THIS DOCUMENT, ALONG WITH ALL COPIES AND EXTRACTS, AND ALL RELATED NOTES AND ANALYSES, MUST BE RETURNED TO EVOQUA OR DESTROYED, AS INSTRUCTED BY EVOQUA. ACCEPTANCE OF THE DELIVERY OF THIS DOCUMENT CONSTITUTES AGREEMENT TO THESE TERMS.

DESIGNER	BAC	DATE 7/28/14
CHECKER		DATE
ENGINEER		DATE
MANAGER		DATE
FILE:		
SCALE: 48		

TITLE
1403TL DISC FILTER WITH BYPASS
STANDARD PRODUCT FORM DRAWING

CLIENT

evoqua WATER TECHNOLOGIES
WATER TECHNOLOGIES
Thomasville, GA
1-800-841-1550

PROJECT	CODE	DRAWING	SHEET	REV
		PF1403TL		000

Continuous Backwash Sand Filter
Budget Proposal

Project Name: Santa Fe County, NM
Date: 12/13/16

We would suggest providing concrete tanks with our 50 ft2 modules.

Process Requirements:

peak flow 1042 gpm
- filtration area required 200ft2
- hydraulic loading 5.21 gpm/ft2

average flow 347 gpm
- hydraulic loading 1.74 gpm/ft2

To accommodate the requirement for a redundant filter train, we would suggest two (2) filter modules in three (3) filter trains, resulting in 6 total filter modules. Standard operation will have 4 filters online and 1 train is off.

Equipment Budget Pricing:

Six (6) CB465-20 Filters (arranged in 3 cells of 2 filters each) _____ $300,000

Scope includes:

- Internals for 8 CB465-20 Filters
- Filter Media
- Weir Plates
- Supports and Grating / Covers over filter cells
- Pneumatic Control Panels
- Air Compressor
- Freight
- Startup, Warranty, Manuals

Does not include any concrete tankage of any kind.

Does not include any piping, chemical feed, instrumentation or installation.

See attached drawings for reference of a prior job that is arranged in 3 cells of 2 modules each.

BAR = 1" AT PLOT SCALE

BILL OF MATERIAL				
ITEM	PART	DESCRIPTION	UNIT	QTY

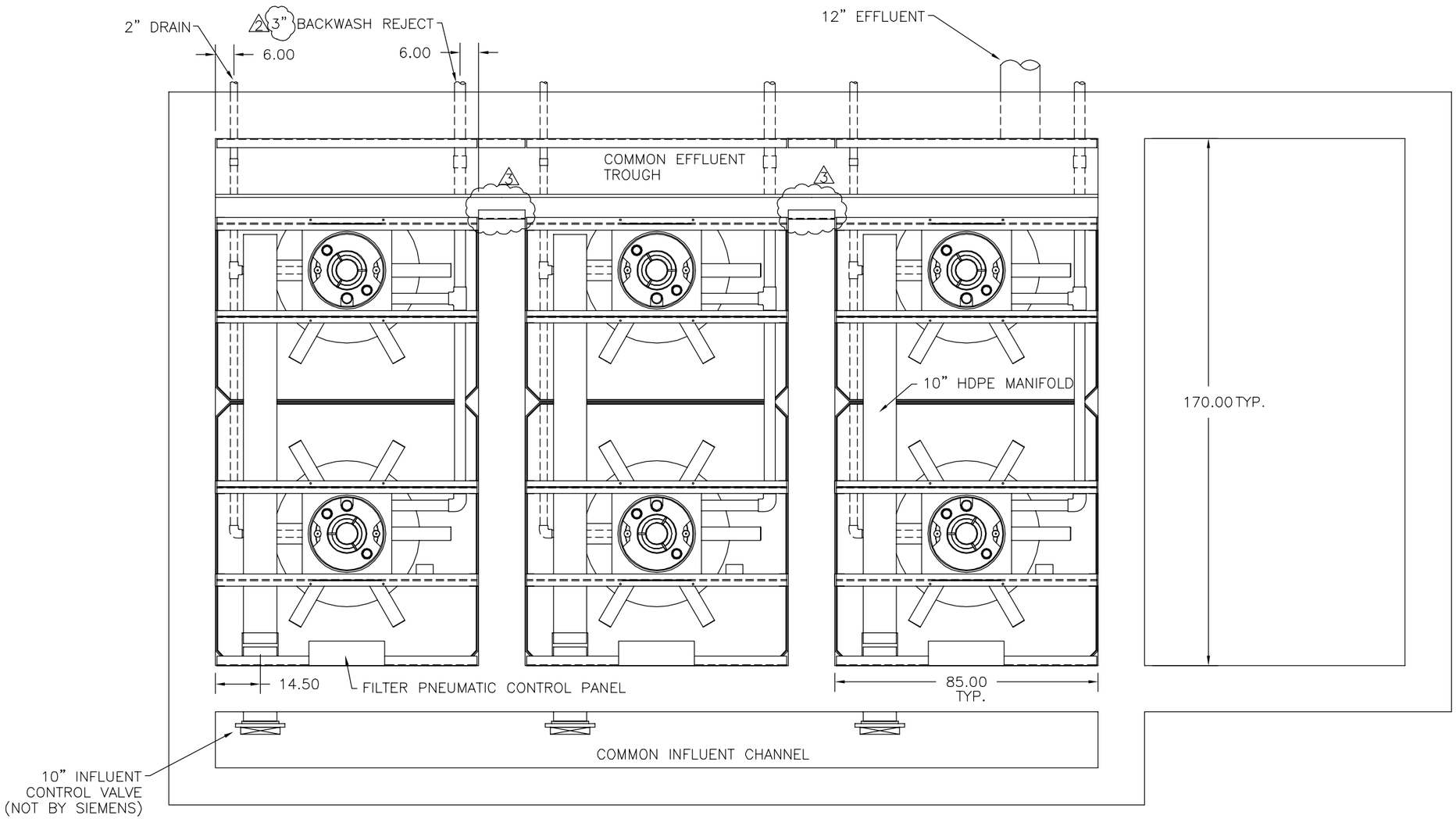

PLAN VIEW

REV	DESCRIPTION	BY	DATE
003	REV WALL CONFIGURATION @ EFFLUENT TROUGHT	JHB	09/23/2013
002	REV LABEL OF BACKWASH REJECT PIPING TO 3"	JHB	01/10/2013
001	ADDED HORIZONTAL DIMENSIONS TO NOZZLES	JHB	08/23/2012

COMPANY CONFIDENTIAL

THIS DOCUMENT AND ALL INFORMATION CONTAINED HEREIN ARE THE PROPERTY OF SIEMENS WATER TECHNOLOGIES CORP. AND/OR ITS AFFILIATES ("SIEMENS"). THE DESIGN CONCEPTS AND INFORMATION CONTAINED HEREIN ARE PROPRIETARY TO SIEMENS AND ARE SUBMITTED IN CONFIDENCE. THEY ARE NOT TRANSFERRABLE AND MUST BE USED ONLY FOR THE PURPOSE FOR WHICH THE DOCUMENT IS EXPRESSLY PROVIDED. THEY MUST NOT BE DISCLOSED, REPRODUCED, LOANED OR USED IN ANY OTHER MANNER WITHOUT THE EXPRESS WRITTEN CONSENT OF SIEMENS. IN NO EVENT SHALL THEY BE USED IN ANY MANNER DETRIMENTAL TO THE INTEREST OF SIEMENS. ALL PATENT RIGHTS ARE RESERVED. UPON THE DEMAND OF SIEMENS, THIS DOCUMENT, ALONG WITH ALL COPIES AND EXTRACTS, AND ALL RELATED NOTES AND ANALYSES, MUST BE RETURNED TO SIEMENS OR DESTROYED, AS INSTRUCTED BY SIEMENS. ACCEPTANCE OF THE DELIVERY OF THIS DOCUMENT CONSTITUTES AGREEMENT TO THESE TERMS AND CONDITIONS. IF THIS DOCUMENT COMES INTO THE POSSESSION OF A THIRD-PARTY THAT IS NOT A PARTY TO A NON-DISCLOSURE AGREEMENT WITH SIEMENS OR OTHERWISE AUTHORIZED TO POSSESS OR USE THIS DOCUMENT, SUCH PARTY MUST IMMEDIATELY RETURN THIS DOCUMENT TO SIEMENS AND SHALL NOT USE THIS DOCUMENT FOR ANY PURPOSE WHATSOEVER UNLESS AND UNTIL AUTHORIZED IN WRITING BY SIEMENS TO DO SO. IF SUCH THIRD-PARTY DOES USE THIS DOCUMENT FOR AN UNAUTHORIZED PURPOSE, SIEMENS WILL PURSUE ANY AND ALL REMEDIES AVAILABLE TO IT, AT LAW OR IN EQUITY, UNDER FEDERAL LAW AND/OR UNDER THE LAWS OF THE COMMONWEALTH OF MASSACHUSETTS OR OTHER APPLICABLE LAW.

DESIGNER	DATE
J.BEATY	02/10/2012
CHECKER	DATE
ENGINEER	DATE
MANAGER	DATE
FILE:	UPDATE:
SCALE: 40	SIZE: B

TITLE
PLAN VIEW (3) CELLS OF (2) 50 SQ. FT. MODULES

CLIENT
RISING SUN WWTP

evoqua WATER TECHNOLOGIES
WATER TECHNOLOGIES
WAUKESHA, WI
262-547-0141

PROJECT	CODE	DRAWING	SHEET	REV
		2033-44-B1		003

BAR = 1" AT PLOT SCALE

BILL OF MATERIAL				
ITEM	PART	DESCRIPTION	UNIT	QTY

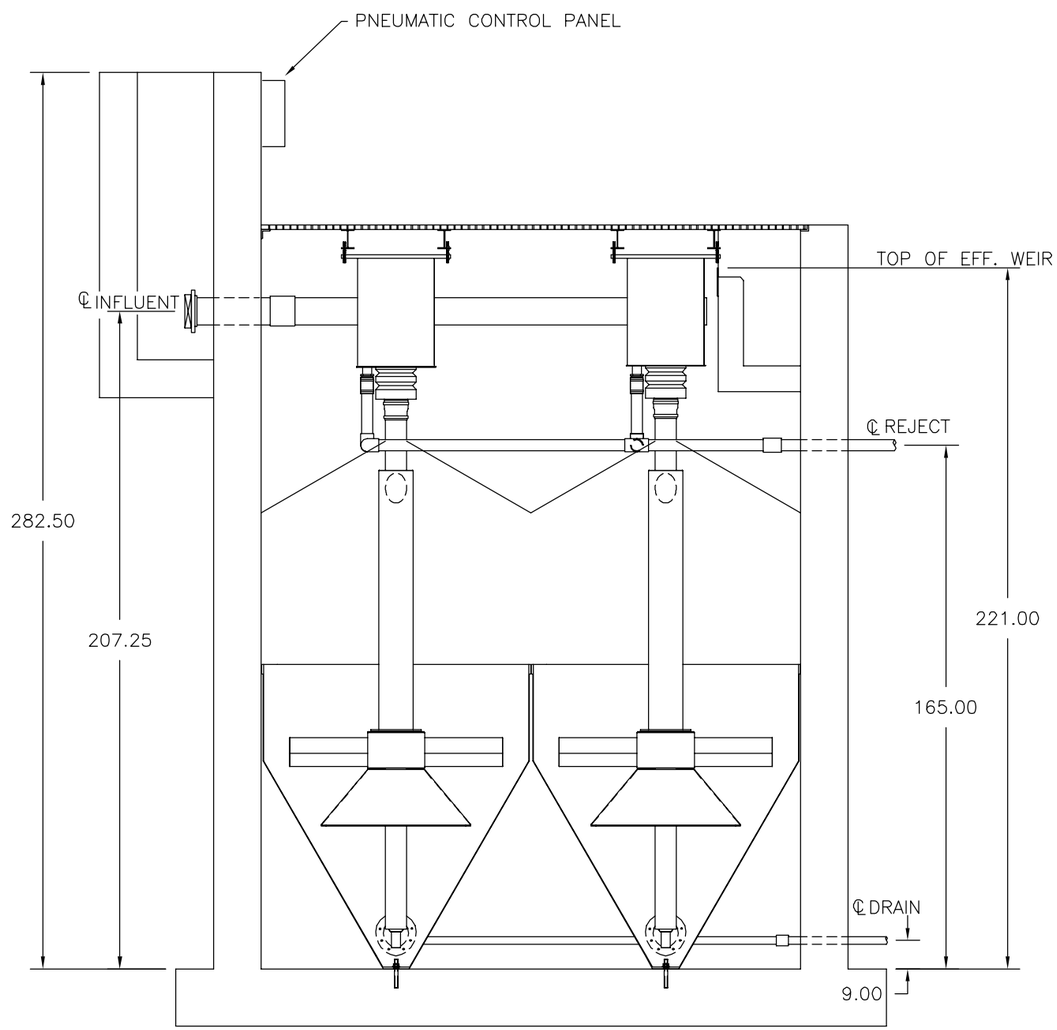

SECTION A–A

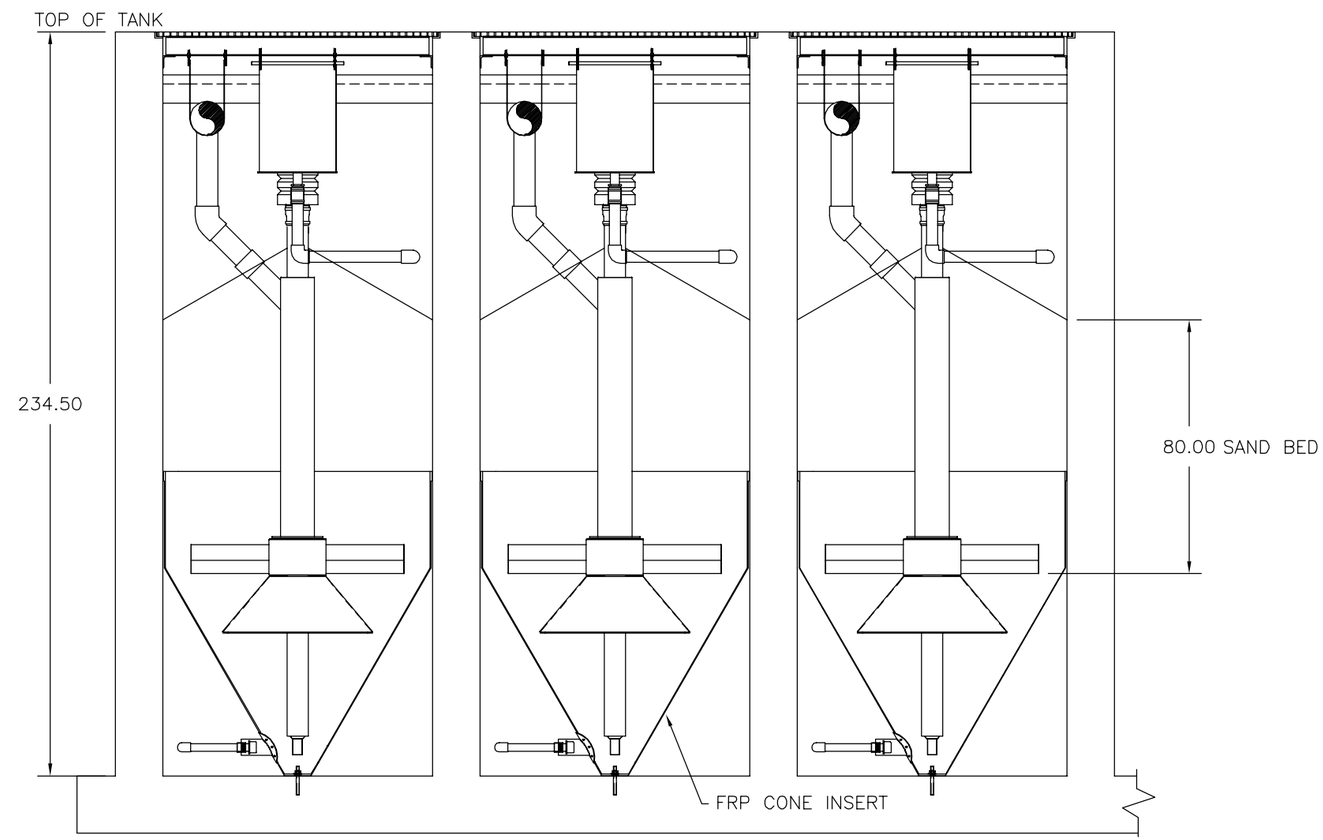

SECTION B–B

DIMENSIONS IN INCHES UNLESS SPECIFIED	
TOLERANCES UNLESS OTHERWISE SPECIFIED	
TWO (2) PLACE DEC.	±.06
THREE (3) PLACE DEC.	±.005
ANGULAR	±.50
STRUCTURAL DIMENSIONS	±1/16
MACHINED SURFACES	250

ESTIMATED WEIGHT ??????? LBS.

COPY ROUTINGS FROM DWG # ???????

REV	DESCRIPTION	BY	DATE
001	REVISED GRATING FITUP PER AS BUILT TANKS	J.BEATY	05/02/2013

COMPANY CONFIDENTIAL

THIS DOCUMENT AND ALL INFORMATION CONTAINED HEREIN ARE THE PROPERTY OF SIEMENS WATER TECHNOLOGIES CORP. AND/OR ITS AFFILIATES ("SIEMENS"). THE DESIGN CONCEPTS AND INFORMATION CONTAINED HEREIN ARE PROPRIETARY TO SIEMENS AND ARE SUBMITTED IN CONFIDENCE. THEY ARE NOT TRANSFERRABLE AND MUST BE USED ONLY FOR THE PURPOSE FOR WHICH THE DOCUMENT IS EXPRESSLY PROVIDED. THEY MUST NOT BE DISCLOSED, REPRODUCED, LOANED OR USED IN ANY OTHER MANNER WITHOUT THE EXPRESS WRITTEN CONSENT OF SIEMENS. IN NO EVENT SHALL THEY BE USED IN ANY MANNER DETRIMENTAL TO THE INTEREST OF SIEMENS. ALL PATENT RIGHTS ARE RESERVED. UPON THE DEMAND OF SIEMENS, THIS DOCUMENT, ALONG WITH ALL COPIES AND EXTRACTS, AND ALL RELATED NOTES AND ANALYSES, MUST BE RETURNED TO SIEMENS OR DESTROYED, AS INSTRUCTED BY SIEMENS. ACCEPTANCE OF THE DELIVERY OF THIS DOCUMENT CONSTITUTES AGREEMENT TO THESE TERMS AND CONDITIONS. IF THIS DOCUMENT COMES INTO THE POSSESSION OF A THIRD–PARTY THAT IS NOT A PARTY TO A NON–DISCLOSURE AGREEMENT WITH SIEMENS OR OTHERWISE AUTHORIZED TO POSSESS OR USE THIS DOCUMENT, SUCH PARTY MUST IMMEDIATELY RETURN THIS DOCUMENT TO SIEMENS AND SHALL NOT USE THIS DOCUMENT FOR ANY PURPOSE WHATSOEVER UNLESS AND UNTIL AUTHORIZED IN WRITING BY SIEMENS TO DO SO. IF SUCH THIRD–PARTY DOES USE THIS DOCUMENT FOR AN UNAUTHORIZED PURPOSE, SIEMENS WILL PURSUE ANY AND ALL REMEDIES AVAILABLE TO IT, AT LAW OR IN EQUITY, UNDER FEDERAL LAW AND/OR UNDER THE LAWS OF THE COMMONWEALTH OF MASSACHUSETTS OR OTHER APPLICABLE LAW.

DESIGNER	J.BEATY	DATE 02/14/2012
CHECKER		DATE
ENGINEER		DATE
MANAGER		DATE
FILE:		UPDATE:
SCALE: 50		SIZE: B

TITLE
CONTINUOUS BACKWASH FILTER SECTIONAL ELEVATIONS 2 METER SAND BED DEPTH

CLIENT
RISING SUN WWTP

evoqua WATER TECHNOLOGIES
WATER TECHNOLOGIES
WAUKESHA, WI
262–547–0141

PROJECT	CODE	DRAWING	SHEET	REV
		2033.44B–2		001

Leopold elimi-NITE® 2.0 denitrification system

THE NEXT GENERATION IN NUTRIENT REMOVAL

The Leopold elimi-NITE® 2.0 system is the next step in reducing nutrients in the effluent stream of a wastewater treatment plant. The elimi-NITE® 2.0 system builds on the existing elimi-NITE® denitrification system by adding additional features and increased efficiency as follows:

- Feedback control of the carbon source
- Several types of level control
- Optimum media selection
- Backwash optimization
- Run time optimization

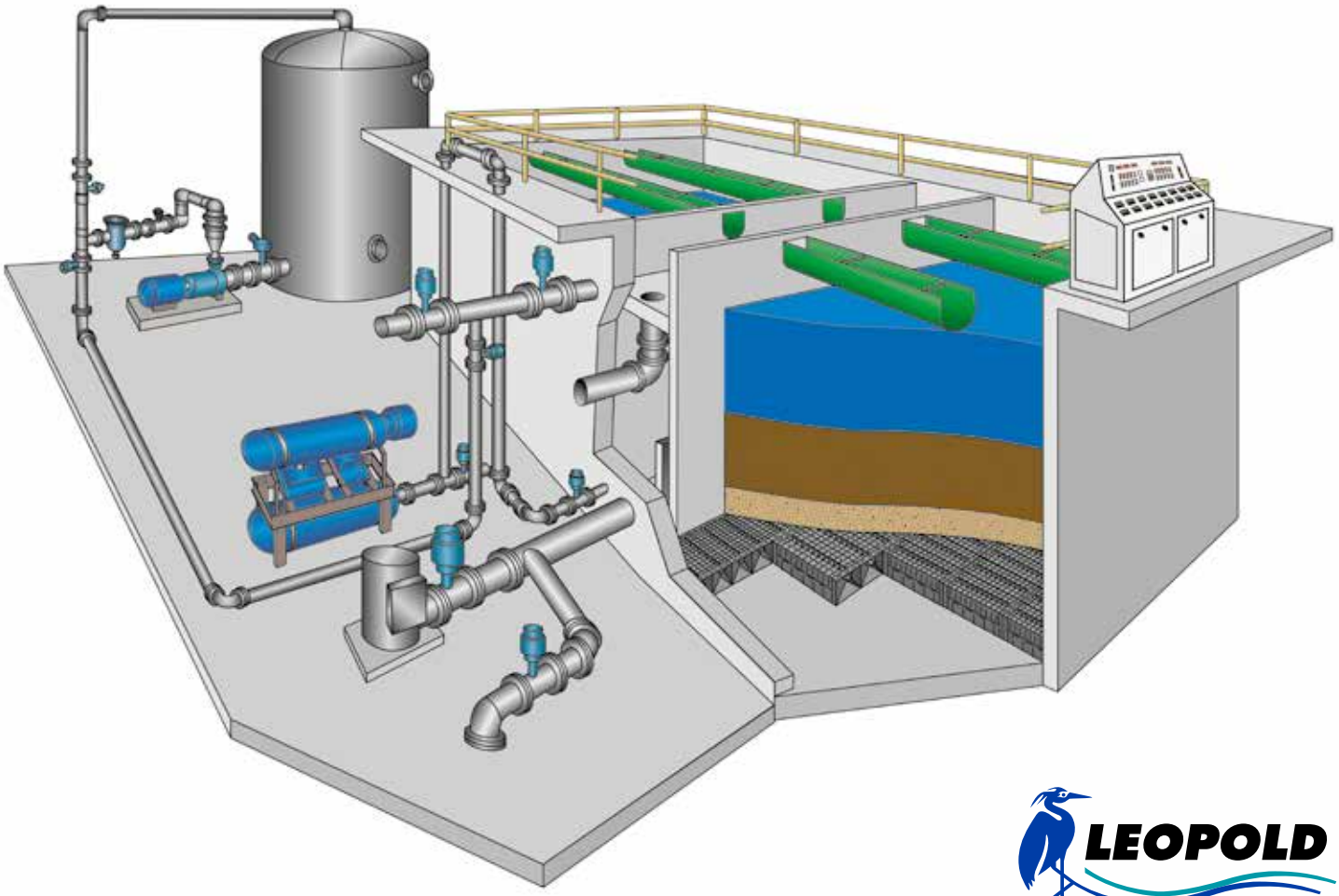

LEOPOLD
a xylem brand

The next generation in nutrient removal

The Leopold® elimi-NITE® 2.0 denitrification system is an effective method of reducing nitrogen in the effluent stream of a wastewater treatment plant by converting nitrate nitrogen to nitrogen gas. The biological conversion is done in an attached growth, downflow, deep bed, mono-media filter. Particulate matter is removed so insoluble phosphorus is removed as well. Since free oxygen will inhibit the activity of the denitrifying process, dissolved oxygen is biologically removed first, thereby creating an anoxic environment for denitrification. A supplemental carbon source or microbiological food is needed because the preceding wastewater treatment processes have removed nearly all of the degradable carbonaceous material from the wastewater. The elimi-NITE® 2.0 system features the following:

Feedback control of the carbon source

The carbon source can be fed based on a mass basis using the filter influent flow rate and nitrate concentration or feed-forward control. Another control loop measuring the filter effluent nitrate concentration can be used in a feedback control system. The elimi-NITE® 2.0 system offers feed-forward control coupled with feedback control to provide an optimal use of methanol that can surpass a feed-forward only control scheme. The elimi-NITE® 2.0 methanol consumption can be near 100% of theoretical values and generally doesn't exceed 110% of overall consumption. As an added benefit, the feedback portion of the unique elimi-NITE® 2.0 control algorithm can achieve and control effluent nitrate concentration at a desired set-point under variable hydraulic and nitrate influent loads. In other words, a desired effluent nitrate concentration can be set and held.

Several types of level control

Constant water level control affords the least amount of dissolved oxygen gain in the feed-water by avoiding splashing of the influent flow. This lowers the overall amount of carbon source needed to achieve process goals. Variable level, while at most times increases the overall methanol usage due to influent splash, can result in somewhat longer run times. The elimi-NITE® 2.0 system design uses variable level and the selection is determined by contaminant loadings and media selection.

Media selection

After comprehensive testing using a state-of-the-art pilot unit and full scale operation, Leopold has the expertise to select the "proper" media for the process application and to meet the treatment goals by balancing regulatory requirements with filter performance.

Backwash optimization

Since media fluidization is not necessary, the filter can use very low backwash rates, sometimes as low as 6 gpm/ ft2 (15 m/h). Air scour rates to augment the backwash cycle can be as low as 5 SCFM/ ft2 (91 m/h).

Run time optimization

Depending on overall system design, run times can approach 100% of theoretical filter bed loading limits.

1612 • Leopold elimi-NITE® 2.0 Denitrification System • Master• 01/2013

xylem
Let's Solve Water

Leopold is a brand of Xylem, whose 12,000 employees are addressing the most complex issues in the global water market.

www.xyleminc.com

Xylem, Inc.
227 South Division Street
Zelienople, PA 16063 USA
Tel. (724) 452-6300
Fax (724) 452-1377
www.fbleopold.com

© 2013 Xylem, Inc. All rights reserved. Leopold is a trademark of Xylem Inc. or one of its subsidiaries.

Appendix E.

Estimate of Probable Construction Costs

This page intentionally left blank.

Santa Fe County
Quill Wastewater Treatment Facility Upgrades
Preliminary Estimate of Probable Construction Costs

SUMMARY including NMGRT/CONSTRUCTION/DESIGN	ESTIMATED TOTAL COST	
1.0 MGD - MBR WWTF	$	10,933,226
0.5 MGD - MBR WWTF	$	8,582,670
1.0 MGD - SBR WWTF	$	10,850,045
0.5 MGD - SBR WWTF	$	7,175,597

Santa Fe County
Quill Wastewater Treatment Facility Upgrades
Preliminary Estimate of Probable Construction Costs
MBR Summary - 0.5 MGD

SYSTEM COMPONENT	ESTIMATED COST	
MBR WWTF (not including Additive Alternates)	$	5,907,955
Contingency - 20%	$	1,181,591
Total Estimated Construction Cost	**$**	**7,089,546**
Engineering Design - 10%	$	708,955
Survey & Geotechnical	$	10,000
Construction Related Services - 3%	$	212,686
Subtotal Estimated Project Cost	**$**	**8,021,187**
NMGRT at 7%	$	561,483
Total Estimated Project Cost	**$**	**8,582,670**

Santa Fe County
Quill Wastewater Treatment Facility Upgrades
Preliminary Estimate of Probable Construction Costs
MBR WWTF - 0.5 MGD

ITEM No.	DESCRIPTION	UNIT	EST. QTY.	UNIT PRICE	ESTIMATED COST
1.0	**GENERAL**				
1	Mobilization/Demobilization	LS	1	5%	$ 280,855
				Subtotal for 1.0 Bid Items	**$ 280,855**

0

2.0	**SITE WORK**				
1	Erosion Control	LS	1	$ 10,000	$ 10,000
2	Site Clearing and Grubbing	AC	4	$ 1,300	$ 5,200
3	Yard Piping	LS	1	$ 250,000	$ 250,000
4	Backup Generator	LS	1	$ 125,000	$ 125,000
5	Site Electrical	LS	1	$ 50,000	$ 50,000
6	Base Course	SY	5,400	$ 7	$ 37,800
				Subtotal for 2.0 Bid Items	**$ 478,000**

3.0	**EXISTING WASTEWATER PONDS**				
1	Existing Aeration Lagoon No. 2, remove and dispose, including liner and regrading, compl.	LS	1	$ 20,000	$ 20,000
				Subtotal for 3.0 Bid Items	**$ 20,000**

Santa Fe County
Quill Wastewater Treatment Facility Upgrades
Preliminary Estimate of Probable Construction Costs
MBR WWTF - 0.5 MGD

ITEM No.	DESCRIPTION	UNIT	EST. QTY.	UNIT PRICE	ESTIMATED COST
4.0	**FINE SCREEN AND GRIT BUILDING**				
1	Metal Building (50' x 50')	SF	2,500	$ 100	$ 250,000
2	Fine Screen - 1 MGD; (2 MGD =$205k each)	EA	2	$ 165,000	$ 330,000
3	Installation	LS	1	$ 16,500	$ 16,500
4	Grit Removal Equipment (2 MGD)	LS	1	$ 135,000	$ 135,000
5	Installation	LS	1	$ 13,500	$ 13,500
6	HVAC / Plumbing	LS	1	$ 25,000	$ 25,000
7	Electrical	LS	1	$ 50,000	$ 50,000
8	Influent Lift Station - 1.0 MGD duplex equipment $70k; 2.0 MGD duplex equipment $118k	LS	1	$ 225,000	$ 225,000
9	Influent Splitter Box	EA	1	$ 50,000	$ 50,000
				Subtotal for 4.0 Bid Items	**$ 1,095,000**

*Included in MBR Equipment, Bid Item 7.0, Line 2

5.0	**OPERATIONS BUILDING**				
1	Metal Building (50' x 100')	SF	5,000	$ 100	$ 500,000
2	Blowers*	EA			$ -
3	RAS Pumps*	EA			$ -
4	Sodium Hypochlorite/Citric Acid Equipment*	EA			$ -
5	Air Piping	LS	1	$ 40,000	$ 40,000
6	UV Equipment - 1.0 MGD with redundancy; (2.0 MGD $208k no redundancy; $288k-300k)	LS	1	$ 181,000	$ 181,000
7	Installation	LS	1	$ 18,100	$ 18,100
8	HVAC / Plumbing	LS	1	$ 50,000	$ 50,000
9	Electrical	LS	1	$ 200,000	$ 200,000
				Subtotal for 5.0 Bid Items	**$ 989,100**

Santa Fe County
Quill Wastewater Treatment Facility Upgrades
Preliminary Estimate of Probable Construction Costs
MBR WWTF - 0.5 MGD

ITEM No.	DESCRIPTION	UNIT	EST. QTY.	UNIT PRICE	ESTIMATED COST
6.0	**BIOLOGICAL BASINS**				
1	Biological Trains - 0.5 MGD; (1.0 MGD = $600k)	CY	300	$ 1,000	$ 300,000
2	Air Piping	LS	1	$ 80,000	$ 80,000
3	Bridge/Handrails	LS	1	$ 25,000	$ 25,000
4	Electrical	LS	1	$ 35,000	$ 35,000
				Subtotal for 6.0 Bid Items	**$ 440,000**
7.0	**MBR BASIN**				
1	(2) MBR Basins	CY	52	$ 1,000	$ 52,000
2	MBR Equipment - 0.5 MGD with one train/reduction in membranes; 0.5 MGD = $1.55M for two trains BNR/reduction in membranes; 1.0 MGD = $1.725M	LS	1	$ 1,300,000	$ 1,300,000
3	Installation	LS	1	$ 130,000	$ 130,000
4	Bridge Crane	LS	1	$ 80,000	$ 80,000
5	Misc Process Piping	LS	1	$ 100,000	$ 100,000
6	Electrical	LS	1	$ 50,000	$ 50,000
				Subtotal for 7.0 Bid Items	**$ 1,712,000**
8.0	**AEROBIC DIGESTERS**				
1	(1) Basins - 0.5 MGD (1.0 MGD = $455,000)	CY	228	$ 1,000	$ 227,500
2	Coarse Bubble Aeration	LS	1	$ 50,000	$ 50,000
3	Installation	LS	1	$ 7,500	$ 7,500
4	Submersible Pumps	EA	1	$ 20,000	$ 20,000
5	Installation	LS	1	$ 5,000	$ 5,000
6	Electrical	LS	1	$ 20,000	$ 20,000
				Subtotal for 8.0 Bid Items	**$ 330,000**
9.0	**SLUDGE DRYING BEDS**				
1	(2) Sludge Drying Beds Concrete	LS	1	$ 268,000	$ 268,000
				Subtotal for 9.0 Bid Items	**$ 268,000**

Santa Fe County
Quill Wastewater Treatment Facility Upgrades
Preliminary Estimate of Probable Construction Costs
MBR WWTF - 0.5 MGD

ITEM No.	DESCRIPTION	UNIT	EST. QTY.	UNIT PRICE	ESTIMATED COST
10.0	**MISCELLANEOUS**				
1	SWPPP Permit	LS	1	$ 5,000	$ 5,000
2	Contractor's Bond	LS	1	$ 50,000	$ 50,000
3	Insurance	LS	1	$ 20,000	$ 20,000
4	Start-Up	LS	1	$ 10,000	$ 10,000
5	Testing Allowance	LS	1	$ 10,000	$ 10,000
6	Instrumentation	LS	1	$ 200,000	$ 200,000
				Subtotal for 10.0 Bid Items	**$ 295,000**

Subtotal of Bid Items	**$ 5,907,955**

11.0	**ADDITIVE ALTERNATES**				
1	Existing Aeration Lagoon No. 1, remove and dispose, including liner and regrading, compl.	SY	2,600	$ 10	$ 26,000
2	Existing Aeration Lagoon No. 1, sludge removal and dewatering, remove and dispose, compl.	GAL	1,265,000	$ 0.07	$ 88,550
3	Existing Secondary Pond, remove and dispose, including liner and regrading, compl.	SY	11,000	$ 10	$ 110,000
4	Existing Secondary Pond, sludge removal and dewatering, remove and dispose, compl.	GAL	2,720,000	$ 0.07	$ 190,400
5	Existing Primary Pond, remove and dispose, including liner and regrading, compl.	SY	11,000	$ 10	$ 110,000
6	Existing Primary Pond, sludge removal and dewatering, remove and dispose, compl.	GAL	2,720,000	$ 0.07	$ 190,400
				Subtotal for 11.0 Bid Items	**$ 715,350**

Santa Fe County
Quill Wastewater Treatment Facility Upgrades
Preliminary Estimate of Probable Construction Costs
SBR Summary - 0.5 MGD

SYSTEM COMPONENT	ESTIMATED COST	
SBR WWTF (not including Additive Alternates)	$	4,938,175
Contingency - 20%	$	987,635
Total Estimated Construction Cost	**$**	**5,925,810**
Engineering Design - 10%	$	592,581
Survey & Geotechnical	$	10,000
Construction Related Services - 3%	$	177,774
Subtotal Estimated Project Cost	**$**	**6,706,165**
NMGRT at 7%	$	469,432
Total Estimated Project Cost	**$**	**7,175,597**

Santa Fe County
Quill Wastewater Treatment Facility Upgrades
Preliminary Estimate of Probable Construction Costs
SBR WWTF - 0.5 MGD

ITEM No.	DESCRIPTION	UNIT	EST. QTY.	UNIT PRICE	ESTIMATED COST
1.0	**GENERAL**				
1	Mobilization/Demobilization	LS	1	5%	$ 234,675
				Subtotal for 1.0 Bid Items	**$ 234,675**

0

2.0	**SITE WORK**				
1	Erosion Control	LS	1	$ 10,000	$ 10,000
2	Site Clearing and Grubbing	AC	4	$ 1,300	$ 5,200
3	Yard Piping	LS	1	$ 300,000	$ 300,000
4	Backup Generator	LS	1	$ 125,000	$ 125,000
5	Site Electrical	LS	1	$ 50,000	$ 50,000
6	Base Course	SY	12,100	$ 7	$ 84,700
				Subtotal for 2.0 Bid Items	**$ 574,900**

3.0	**EXISTING WASTEWATER PONDS**				
1	Existing Aeration Lagoon No. 2, remove and dispose, including liner and regrading, compl.	LS	1	$ 20,000	$ 20,000
				Subtotal for 3.0 Bid Items	**$ 20,000**

Santa Fe County
Quill Wastewater Treatment Facility Upgrades
Preliminary Estimate of Probable Construction Costs
SBR WWTF - 0.5 MGD

ITEM No.	DESCRIPTION	UNIT	EST. QTY.	UNIT PRICE	ESTIMATED COST
4.0	**GRIT BUILDING**				
1	Metal Building (25' x 25')	SF	625	$ 100	$ 62,500
2	Grit Removal Equipment (2 MGD)	LS	1	$ 135,000	$ 135,000
3	Installation	LS	1	$ 13,500	$ 13,500
4	HVAC / Plumbing	LS	1	$ 25,000	$ 25,000
5	Electrical	LS	1	$ 50,000	$ 50,000
6	Influent Lift Station - 1.0 MGD duplex equipment $70k; 2.0 MGD duplex equipment $118k	LS	1	$ 225,000	$ 225,000
7	Influent Splitter Box	EA	1	$ 50,000	$ 50,000
				Subtotal for 4.0 Bid Items	**$ 561,000**
5.0	**OPERATIONS BUILDING**				
1	Metal Building (40' x 60')	SF	2,400	$ 100	$ 240,000
2	Blowers*	EA			$ -
3	Air Piping	LS	1	$ 40,000	$ 40,000
4	HVAC / Plumbing	LS	1	$ 50,000	$ 50,000
5	Electrical	LS	1	$ 125,000	$ 125,000
				Subtotal for 5.0 Bid Items	**$ 455,000**

*Included in SBR Equipment, Bid Item 7.0, Line 2

6.0	**UV BUILDING**				
1	Metal Building (30' x 30')	SF	900	$ 100	$ 90,000
2	UV Equipment - 1.0 MGD with redundancy; (2.0 MGD $208k no redundancy; $288k-300k)	LS	1	$ 181,000	$ 181,000
3	Installation	LS	1	$ 18,100	$ 18,100
4	HVAC / Plumbing	LS	1	$ 25,000	$ 25,000
5	Electrical	LS	1	$ 25,000	$ 25,000
				Subtotal for 6.0 Bid Items	**$ 339,100**

Santa Fe County
Quill Wastewater Treatment Facility Upgrades
Preliminary Estimate of Probable Construction Costs
SBR WWTF - 0.5 MGD

ITEM No.	DESCRIPTION	UNIT	EST. QTY.	UNIT PRICE	ESTIMATED COST
7.0	**SBR / BIOLOGICAL BASIN**				
1	(1) SBR Trains - 0.5 MGD (1.0 MGD = $1,630,000)	CY	815	$ 1,000	$ 815,000
2	SBR Equipment - 0.5 MGD (1.0 MGD = $1,260,000)	LS	1	$ 630,000	$ 630,000
3	Installation	LS	1	$ 63,000	$ 63,000
4	Misc Process Piping	LS	1	$ 70,000	$ 70,000
5	Electrical	LS	1	$ 40,000	$ 40,000
				Subtotal for 7.0 Bid Items	**$ 1,618,000**

8.0	**EFFLUENT FILTER**				
1	(3) Basins - 0.5 MGD (1.0 MGD = $50k)	CY	100	$ 500	$ 50,000
2	Sand Filter Equipment - 0.5 MGD (1.0 MGD = $300k)	LS	1	$ 150,000	$ 150,000
3	Installation	LS	1	$ 22,500	$ 22,500
4	Misc Process Piping	LS	1	$ 20,000	$ 20,000
				Subtotal for 8.0 Bid Items	**$ 242,500**

9.0	**AEROBIC DIGESTERS**				
1	(1) Basins - 0.5 MGD (1.0 MGD = $455,000)	CY	228	$ 1,000	$ 227,500
2	Coarse Bubble Aeration	LS	1	$ 50,000	$ 50,000
3	Installation	LS	1	$ 7,500	$ 7,500
4	Submersible Pumps	EA	1	$ 20,000	$ 20,000
5	Installation	LS	1	$ 5,000	$ 5,000
6	Electrical	LS	1	$ 20,000	$ 20,000
				Subtotal for 9.0 Bid Items	**$ 330,000**

10.0	**SLUDGE DRYING BEDS**				
1	(2) Sludge Drying Beds Concrete	LS	1	$ 268,000	$ 268,000
				Subtotal for 10.0 Bid Items	**$ 268,000**

Santa Fe County
Quill Wastewater Treatment Facility Upgrades
Preliminary Estimate of Probable Construction Costs
SBR WWTF - 0.5 MGD

ITEM No.	DESCRIPTION	UNIT	EST. QTY.	UNIT PRICE	ESTIMATED COST
11.0	**MISCELLANEOUS**				
1	SWPPP Permit	LS	1	$ 5,000	$ 5,000
2	Contractor's Bond	LS	1	$ 50,000	$ 50,000
3	Insurance	LS	1	$ 20,000	$ 20,000
4	Start-Up	LS	1	$ 10,000	$ 10,000
5	Testing Allowance	LS	1	$ 10,000	$ 10,000
6	Instrumentation	LS	1	$ 200,000	$ 200,000
				Subtotal for 11.0 Bid Items	**$ 295,000**

Subtotal of Bid Items	**$ 4,938,175**

12.0	**ADDITIVE ALTERNATIVES**				
2	Existing Aeration Lagoon No. 1, sludge removal and dewatering, remove and dispose, compl.	GAL	1,265,000	$ 0.07	$ 88,550
3	Existing Secondary Settling Pond, remove and dispose, including liner and regrading, compl.	SY	11,000	$ 10	$ 110,000
4	Existing Secondary Settling Pond, sludge removal and dewatering, remove and dispose, compl.	GAL	2,720,000	$ 0.07	$ 190,400
5	Existing Primary Settling Pond, remove and dispose, including liner and regrading, compl.	SY	11,000	$ 10	$ 110,000
6	Existing Primary Settling Pond, sludge removal and dewatering, remove and dispose, compl.	GAL	2,720,000	$ 0.07	$ 190,400
				Subtotal for 12.0 Bid Items	**$ 689,350**

Santa Fe County
Quill Wastewater Treatment Facility Upgrades
Preliminary Estimate of Probable Construction Costs
MBR Summary - 1.0 MGD

SYSTEM COMPONENT	ESTIMATED COST	
MBR WWTF (not including Additive Alternates)	$	7,528,000
Contingency - 20%	$	1,505,600
Total Estimated Construction Cost	**$**	**9,033,600**
Engineering Design - 10%	$	903,360
Survey & Geotechnical	$	10,000
Construction Related Services - 3%	$	271,008
Subtotal Estimated Project Cost	**$**	**10,217,968**
NMGRT at 7%	$	715,258
Total Estimated Project Cost	**$**	**10,933,226**

Santa Fe County
Quill Wastewater Treatment Facility Upgrades
Preliminary Estimate of Probable Construction Costs
MBR WWTF - 1.0 MGD

ITEM No.	DESCRIPTION	UNIT	EST. QTY.	UNIT PRICE	ESTIMATED COST
1.0	**GENERAL**				
1	Mobilization/Demobilization	LS	1	5%	$ 358,000
				Subtotal for 1.0 Bid Items	**$ 358,000**

0

2.0	**SITE WORK**				
1	Erosion Control	LS	1	$ 10,000	$ 10,000
2	Site Clearing and Grubbing	AC	4	$ 1,300	$ 5,200
3	Yard Piping	LS	1	$ 250,000	$ 250,000
4	Backup Generator	LS	1	$ 125,000	$ 125,000
5	Site Electrical	LS	1	$ 50,000	$ 50,000
6	Base Course	SY	5,400	$ 7	$ 37,800
				Subtotal for 2.0 Bid Items	**$ 478,000**

3.0	**EXISTING WASTEWATER PONDS**				
1	Existing Aeration Lagoon No. 2, remove and dispose, including liner and regrading, compl.	LS	1	$ 20,000	$ 20,000
				Subtotal for 3.0 Bid Items	**$ 20,000**

Santa Fe County
Quill Wastewater Treatment Facility Upgrades
Preliminary Estimate of Probable Construction Costs
MBR WWTF - 1.0 MGD

ITEM No.	DESCRIPTION	UNIT	EST. QTY.	UNIT PRICE	ESTIMATED COST
4.0	**FINE SCREEN AND GRIT BUILDING**				
1	Metal Building (50' x 50')	SF	2,500	$ 100	$ 250,000
2	Fine Screen (2 MGD)	EA	2	$ 205,000	$ 410,000
3	Installation	LS	1	$ 20,500	$ 20,500
4	Grit Removal Equipment (2 MGD)	LS	1	$ 135,000	$ 135,000
5	Installation	LS	1	$ 13,500	$ 13,500
6	HVAC / Plumbing	LS	1	$ 25,000	$ 25,000
7	Electrical	LS	1	$ 50,000	$ 50,000
8	Influent Lift Station (2 MGD)	LS	1	$ 250,000	$ 250,000
9	Influent Splitter Box	EA	1	$ 50,000	$ 50,000
				Subtotal for 4.0 Bid Items	**$ 1,204,000**

*Included in MBR Equipment, Bid Item 7.0, Line 2

5.0	**OPERATIONS BUILDING**				
1	Metal Building (50' x 100')	SF	5,000	$ 100	$ 500,000
2	Blowers*	EA			$ -
3	RAS Pumps*	EA			$ -
4	Sodium Hypochlorite/Citric Acid Equipment*	EA			$ -
5	Air Piping	LS	1	$ 40,000	$ 40,000
6	UV Equipment (2 MGD)	LS	1	$ 235,000	$ 235,000
7	Installation	LS	1	$ 23,500	$ 23,500
8	HVAC / Plumbing	LS	1	$ 50,000	$ 50,000
9	Electrical	LS	1	$ 200,000	$ 200,000
				Subtotal for 5.0 Bid Items	**$ 1,048,500**

Santa Fe County
Quill Wastewater Treatment Facility Upgrades
Preliminary Estimate of Probable Construction Costs
MBR WWTF - 1.0 MGD

ITEM No.	DESCRIPTION	UNIT	EST. QTY.	UNIT PRICE	ESTIMATED COST
6.0	**BIOLOGICAL BASINS**				
1	(2) Biological Trains	CY	600	$ 1,000	$ 600,000
2	Air Piping	LS	1	$ 100,000	$ 100,000
3	Bridge/Handrails	LS	1	$ 50,000	$ 50,000
4	Electrical	LS	1	$ 50,000	$ 50,000
				Subtotal for 6.0 Bid Items	**$ 800,000**
7.0	**MBR BASIN**				
1	(2) MBR Basins	CY	52	$ 1,000	$ 52,000
2	MBR Equipment	LS	1	$ 1,725,000	$ 1,725,000
3	Installation	LS	1	$ 172,500	$ 172,500
4	Bridge Crane	LS	1	$ 80,000	$ 80,000
5	Misc Process Piping	LS	1	$ 100,000	$ 100,000
6	Electrical	LS	1	$ 50,000	$ 50,000
				Subtotal for 7.0 Bid Items	**$ 2,179,500**
8.0	**AEROBIC DIGESTERS**				
1	(2) Basins	CY	455	$ 1,000	$ 455,000
2	Coarse Bubble Aeration	LS	2	$ 50,000	$ 100,000
3	Installation	LS	1	$ 15,000	$ 15,000
4	Submersible Pumps	EA	2	$ 20,000	$ 40,000
5	Installation	LS	1	$ 5,000	$ 5,000
6	Electrical	LS	1	$ 30,000	$ 30,000
				Subtotal for 8.0 Bid Items	**$ 645,000**
9.0	**SLUDGE DRYING BEDS**				
1	(3) Sludge Drying Beds Concrete	LS	1	$ 400,000	$ 400,000
				Subtotal for 9.0 Bid Items	**$ 400,000**

Santa Fe County
Quill Wastewater Treatment Facility Upgrades
Preliminary Estimate of Probable Construction Costs
MBR WWTF - 1.0 MGD

ITEM No.	DESCRIPTION	UNIT	EST. QTY.	UNIT PRICE	ESTIMATED COST
10.0	**MISCELLANEOUS**				
1	SWPPP Permit	LS	1	$ 5,000	$ 5,000
2	Contractor's Bond	LS	1	$ 50,000	$ 50,000
3	Insurance	LS	1	$ 20,000	$ 20,000
4	Start-Up	LS	1	$ 10,000	$ 10,000
5	Testing Allowance	LS	1	$ 10,000	$ 10,000
6	Instrumentation	LS	1	$ 300,000	$ 300,000
				Subtotal for 10.0 Bid Items	**$ 395,000**

Subtotal of Bid Items	**$ 7,528,000**

11.0	**ADDITIVE ALTERNATES**				
1	Existing Aeration Lagoon No. 1, remove and dispose, including liner and regrading, compl.	SY	2,600	$ 10	$ 26,000
2	Existing Aeration Lagoon No. 1, sludge removal and dewatering, remove and dispose, compl.	GAL	1,265,000	$ 0.07	$ 88,550
3	Existing Secondary Pond, remove and dispose, including liner and regrading, compl.	SY	11,000	$ 10	$ 110,000
4	Existing Secondary Pond, sludge removal and dewatering, remove and dispose, compl.	GAL	2,720,000	$ 0.07	$ 190,400
5	Existing Primary Pond, remove and dispose, including liner and regrading, compl.	SY	11,000	$ 10	$ 110,000
6	Existing Primary Pond, sludge removal and dewatering, remove and dispose, compl.	GAL	2,720,000	$ 0.07	$ 190,400
				Subtotal for 11.0 Bid Items	**$ 715,350**

Santa Fe County
Quill Wastewater Treatment Facility Upgrades
Preliminary Estimate of Probable Construction Costs
SBR Summary - 1.0 MGD

SYSTEM COMPONENT	ESTIMATED COST	
SBR WWTF (not including Additive Alternates)	$	7,470,670
Contingency - 20%	$	1,494,134
Total Estimated Construction Cost	**$**	**8,964,804**
Engineering Design - 10%	$	896,480
Survey & Geotechnical	$	10,000
Construction Related Services - 3%	$	268,944
Subtotal Estimated Project Cost	**$**	**10,140,229**
NMGRT at 7%	$	709,816
Total Estimated Project Cost	**$**	**10,850,045**

Santa Fe County
Quill Wastewater Treatment Facility Upgrades
Preliminary Estimate of Probable Construction Costs
SBR WWTF - 1.0 MGD

ITEM No.	DESCRIPTION	UNIT	EST. QTY.	UNIT PRICE	ESTIMATED COST
1.0	**GENERAL**				
1	Mobilization/Demobilization	LS	1	5%	$ 355,270
				Subtotal for 1.0 Bid Items	**$ 355,270**

0

2.0	**SITE WORK**				
1	Erosion Control	LS	1	$ 10,000	$ 10,000
2	Site Clearing and Grubbing	AC	4	$ 1,300	$ 5,200
3	Yard Piping	LS	1	$ 300,000	$ 300,000
4	Backup Generator	LS	1	$ 125,000	$ 125,000
5	Site Electrical	LS	1	$ 50,000	$ 50,000
6	Base Course	SY	12,100	$ 7	$ 84,700
				Subtotal for 2.0 Bid Items	**$ 574,900**

3.0	**EXISTING WASTEWATER PONDS**				
1	Existing Aeration Lagoon No. 2, remove and dispose, including liner and regrading, compl.	LS	1	$ 20,000	$ 20,000
				Subtotal for 3.0 Bid Items	**$ 20,000**

Santa Fe County
Quill Wastewater Treatment Facility Upgrades
Preliminary Estimate of Probable Construction Costs
SBR WWTF - 1.0 MGD

ITEM No.	DESCRIPTION	UNIT	EST. QTY.	UNIT PRICE	ESTIMATED COST
4.0	**GRIT BUILDING**				
1	Metal Building (25' x 25')	SF	625	$ 100	$ 62,500
2	Grit Removal Equipment (2 MGD)	LS	1	$ 135,000	$ 135,000
3	Installation	LS	1	$ 13,500	$ 13,500
4	HVAC / Plumbing	LS	1	$ 25,000	$ 25,000
5	Electrical	LS	1	$ 50,000	$ 50,000
6	Influent Lift Station (2 MGD)	LS	1	$ 250,000	$ 250,000
7	Influent Splitter Box	EA	1	$ 50,000	$ 50,000
				Subtotal for 4.0 Bid Items	**$ 586,000**
5.0	**OPERATIONS BUILDING**				
1	Metal Building (40' x 60')	SF	2,400	$ 100	$ 240,000
2	Blowers*	EA			$ -
3	Air Piping	LS	1	$ 40,000	$ 40,000
4	HVAC / Plumbing	LS	1	$ 50,000	$ 50,000
5	Electrical	LS	1	$ 125,000	$ 125,000
				Subtotal for 5.0 Bid Items	**$ 455,000**
6.0	**UV BUILDING**				
1	Metal Building (30' x 30')	SF	900	$ 100	$ 90,000
2	UV Equipment	LS	1	$ 235,000	$ 235,000
3	Installation	LS	1	$ 23,500	$ 23,500
4	HVAC / Plumbing	LS	1	$ 25,000	$ 25,000
5	Electrical	LS	1	$ 25,000	$ 25,000
				Subtotal for 6.0 Bid Items	**$ 398,500**

*Included in SBR Equipment, Bid Item 7.0, Line 2

Santa Fe County
Quill Wastewater Treatment Facility Upgrades
Preliminary Estimate of Probable Construction Costs
SBR WWTF - 1.0 MGD

ITEM No.	DESCRIPTION	UNIT	EST. QTY.	UNIT PRICE	ESTIMATED COST
7.0	**SBR / BIOLOGICAL BASIN**				
1	(2) SBR Trains	CY	1,630	$ 1,000	$ 1,630,000
2	SBR Equipment	LS	1	$ 1,260,000	$ 1,260,000
3	Installation	LS	1	$ 126,000	$ 126,000
4	Misc Process Piping	LS	1	$ 100,000	$ 100,000
5	Electrical	LS	1	$ 50,000	$ 50,000
				Subtotal for 7.0 Bid Items	**$ 3,166,000**

8.0	**EFFLUENT FILTER**				
1	(6) Basins	CY	100	$ 1,000	$ 100,000
2	Sand Filter Equipment	LS	1	$ 300,000	$ 300,000
3	Installation	LS	1	$ 45,000	$ 45,000
4	Misc Process Piping	LS	1	$ 30,000	$ 30,000
				Subtotal for 8.0 Bid Items	**$ 475,000**

9.0	**AEROBIC DIGESTERS**				
1	(2) Basins	CY	455	$ 1,000	$ 455,000
2	Coarse Bubble Aeration	LS	2	$ 50,000	$ 100,000
3	Installation	LS	1	$ 15,000	$ 15,000
4	Submersible Pumps	EA	2	$ 20,000	$ 40,000
5	Installation	LS	1	$ 5,000	$ 5,000
6	Electrical	LS	1	$ 30,000	$ 30,000
				Subtotal for 9.0 Bid Items	**$ 645,000**

10.0	**SLUDGE DRYING BEDS**				
1	(3) Sludge Drying Beds Concrete	LS	1	$ 400,000	$ 400,000
				Subtotal for 10.0 Bid Items	**$ 400,000**

Santa Fe County
Quill Wastewater Treatment Facility Upgrades
Preliminary Estimate of Probable Construction Costs
SBR WWTF - 1.0 MGD

ITEM No.	DESCRIPTION	UNIT	EST. QTY.	UNIT PRICE	ESTIMATED COST
11.0	**MISCELLANEOUS**				
1	SWPPP Permit	LS	1	$ 5,000	$ 5,000
2	Contractor's Bond	LS	1	$ 50,000	$ 50,000
3	Insurance	LS	1	$ 20,000	$ 20,000
4	Start-Up	LS	1	$ 10,000	$ 10,000
5	Testing Allowance	LS	1	$ 10,000	$ 10,000
6	Instrumentation	LS	1	$ 300,000	$ 300,000
				Subtotal for 11.0 Bid Items	**$ 395,000**

Subtotal of Bid Items	**$ 7,470,670**

12.0	**ADDITIVE ALTERNATIVES**				
2	Existing Aeration Lagoon No. 1, sludge removal and dewatering, remove and dispose, compl.	GAL	1,265,000	$ 0.07	$ 88,550
3	Existing Secondary Settling Pond, remove and dispose, including liner and regrading, compl.	SY	11,000	$ 10	$ 110,000
4	Existing Secondary Settling Pond, sludge removal and dewatering, remove and dispose, compl.	GAL	2,720,000	$ 0.07	$ 190,400
5	Existing Primary Settling Pond, remove and dispose, including liner and regrading, compl.	SY	11,000	$ 10	$ 110,000
6	Existing Primary Settling Pond, sludge removal and dewatering, remove and dispose, compl.	GAL	2,720,000	$ 0.07	$ 190,400
				Subtotal for 12.0 Bid Items	**$ 689,350**

Appendix F.

Quill WWTF Staffing

This page intentionally left blank

STAFFING ESTIMATE WORKSHEET FOR EXISTING WWTF (Aerated Lagoons)

DATE: 4/17 **LOCATION: Santa Fe County Quill WWTF** **Avg Design Flow = 0.28 MGD**
Reference: Based on the Estimating Staffing for Municipal Wastewater Treatment Facilities (US EPA)

I. ADJUSTMENT FOR LOCAL CONDITIONS

LOCAL CONDITION	COMMENT	ADJUSTMENT					
		OPERATIONS	MAINTENANCE	SUPERVISORY	CLERICAL	LABORATORY	YARDWORK
PLANT LAYOUT	Average; Minimal Grass	-10%	-	-	-	-	-50%
UNIT PROCESSES	Standard	-	-	-	-	-	-
LEVEL OF TREATMENT	Secondary	-	-	-	-	-	-
TYPE OF WASTE REMOVAL REQUIREMENT	BOD 30/TSS 30	-	-	-	-	-	-
INDUSTRIAL WASTES	None	-	-	-	-	-	-
PRODUCTIVITY	Average	-	-	-	-	-	-
CLIMATE	Moderate Winters	-	-	-	-	-	-
TRAINING	Certification	-	-	-	-	-	-
AUTO. MONITORING	None	-	-	-	-	-	-
AUTO. SAMPLING	None	-	-	-	-	-	-
OFF-PLANT LABORATORY	For Permit Compliance	-	-	-	-	-90%	-
OFF-PLANT MAINTENANCE	Corrective Maintenance Only	-	-25%	-	-	-	-
AGE OF EQUIPMENT	Relatively old; Well cared for	-	10%	-	-	-	-
STORM INFILTRATION	None	-	-	-	-	-	-
TOTAL		-10%	-15%	0%	0%	-90%	-50%

II. ANNUAL MANHOURS FOR MBR

	(FROM TABLES D-5 TO D-33)		(FROM TABLES D-1 TO D-4)			
UNIT PROCESS	**OPERATIONS**	**MAINTENANCE**	**SUPERVISORY**	**CLERICAL**	**LABORATORY**	**YARDWORK**
RAW SEWAGE PUMPING AT PLANT	40	300	-	-	-	-
SCREENING AND GRINDING	40	40	-	-	-	-
AERATED LAGOONS	400	200	-	-	-	-
SETTLING PONDS	200	200	-	-	-	-
CHLORINATION	200	100	-	-	-	-
TOTAL	880	840	400	80	250	400
ADJUSTMENT (FROM I)	-88	-126	0	0	-225	-200
ADJUSTED TOTAL	792	714	400	80	25	200
TOTAL HOURS COMBINED	2,211					

III. STAFFING SUGGESTION FOR EXISTING

	TOTAL HOURS PER YEAR *	ESTIMATED COST	NUMBER OF STAFF
III. STAFFING SUGGESTION FOR MBR	792	$ 15,840	0.5
MAINTENANCE	714	$ 14,280	0.5
SUPERVISORY	400	$ 8,000	0.3
CLERICAL	80	$ 1,600	0.1
LABORATORY	25	$ 500	0.0
YARDWORK	200	$ 4,000	0.1
TOTAL	**2,211**	**$ 44,220**	**1**

*ASSUMES 1500 HOURS PER YEAR PER STAFF (EPA) AT $20/HR

STAFFING ESTIMATE WORKSHEET FOR PROPOSED MBR

DATE: 4/17 **LOCATION: Santa Fe County Quill WWTF** **Avg Design Flow = 0.50 MGD**
Reference: Based on the Estimating Staffing for Municipal Wastewater Treatment Facilities (US EPA)

I. ADJUSTMENT FOR LOCAL CONDITIONS

LOCAL CONDITION	COMMENT	ADJUSTMENT					
		OPERATIONS	MAINTENANCE	SUPERVISORY	CLERICAL	LABORATORY	YARDWORK
PLANT LAYOUT	Average; Minimal Grass	-10%	-	-	-	-	-50%
UNIT PROCESSES	Standard	20%	20%	-	-	-	-
LEVEL OF TREATMENT	Secondary/Advanced	20%	20%	-	-	10%	-
TYPE OF WASTE REMOVAL REQUIREMENT	TN 3/TP 1	20%	20%	-	-	10%	-
INDUSTRIAL WASTES	None	-	-	-	-	-	-
PRODUCTIVITY	Average	-	-	-	-	-	-
CLIMATE	Moderate Winters	-	-	-	-	-	-
TRAINING	Certification	10%	-	10%	-	-	-
AUTO. MONITORING	Monitoring with Feedback	-	5%	-	-	-	-
AUTO. SAMPLING	Of Influent and Effluent	-5%	-	-	-	-	-
OFF-PLANT LABORATORY	For Permit Compliance	-	-	-	-	-75%	-
OFF-PLANT MAINTENANCE	Corrective Maintenance Only	-	-25%	-	-	-	-
AGE OF EQUIPMENT	New	-	-	-	-	-	-
STORM INFILTRATION	None	-	-	-	-	-	-
TOTAL		55%	40%	10%	0%	-55%	-50%

II. ANNUAL MANHOURS FOR MBR

	(FROM TABLES D-5 TO D-33)		(FROM TABLES D-1 TO D-4)			
UNIT PROCESS	**OPERATIONS**	**MAINTENANCE**	**SUPERVISORY**	**CLERICAL**	**LABORATORY**	**YARDWORK**
RAW SEWAGE PUMPING AT PLANT	40	300	-	-	-	-
SCREENING AND GRINDING	80	40	-	-	-	-
GRIT REMOVAL	120	20	-	-	-	-
AERATION BASINS	400	300	-	-	-	-
MBR	200	100	-	-	-	-
UV DISINFECTION	200	100	-	-	-	-
AEROBIC DIGESTION	50	10	-	-	-	-
SLUDGE DRYING BEDS	200	-	-	-	-	-
NITRIFICATION/DENTRIFICATION	3,000	400	-	-	-	-
TOTAL	4,290	1,270	500	160	500	400
ADJUSTMENT (FROM I)	2,360	508	50	0	-275	-200
ADJUSTED TOTAL	6,650	1,778	550	160	225	200
TOTAL HOURS COMBINED	9,563					

III. STAFFING SUGGESTION FOR MBR

	TOTAL HOURS PER YEAR *	ESTIMATED COST	NUMBER OF STAFF
OPERATIONS	6,650	$ 132,990	4.4
MAINTENANCE	1,778	$ 35,560	1.2
SUPERVISORY	550	$ 11,000	0.4
CLERICAL	160	$ 3,200	0.1
LABORATORY	225	$ 4,500	0.2
YARDWORK	200	$ 4,000	0.1
TOTAL	**9,563**	**$ 191,250**	**6**

*ASSUMES 1500 HOURS PER YEAR PER STAFF (EPA) AT $20/HR