MOLZEN-CORBIN & ASSOCIATES 2019 - COPYRIGHT ©

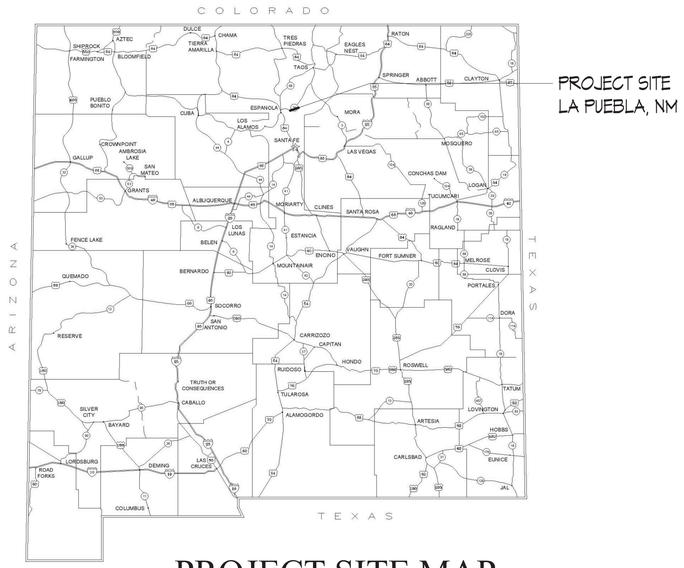

PROJECT SITE MAP

SANTA FE COUNTY
102 GRANT AVENUE
SANTA FE, NEW MEXICO

JUNE 12,2019

construction plans for the

LA PUEBLA FIRE STATION ADDITION

31 Fire House Road
La Puebla, New Mexico

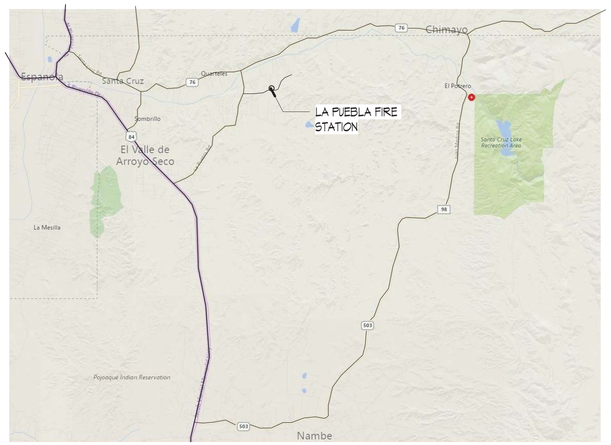

VICINITY PLAN

NORTH

DESCRIPTION	REV DATE	REV NO	NUMERIC SCALE CONFIRMATION
		△	DRAWINGS ARE DEPICTED AT INTENDED NUMERIC SCALES IF THIS BAR EQUALS ONE INCH

SANTA FE COUNTY PUBLIC WORKS
424 NM SR 599
SANTA FE, NEW MEXICO 87504
TELEPHONE NO.: 505-992-3010

SANTA FE COUNTY APPROVALS

SFC Fire Marshal _____ Date: _____

SFC P/W Director _____ Date: _____

SFC Water Utilites Division Director _____ Date: _____

SFC Land Use Director _____ Date: _____

INSPECTION OF EXISTING CONDITIONS

BY SUBMISSION OF A BID THE CONTRACTOR IS ASSERTING THAT IT HAS CONDUCTED A PROPER AND REASONABLE INSPECTION OF EXISTING CONDITIONS. IF THAT INSPECTION REVEALS A VISIBLE PHYSICAL CONDITION THAT IS NOT SPECIFICALLY REFERENCED IN THE CONTRACT DOCUMENTS, THAN THAT CONDITION IS NOT CONSIDERED UNFORESEEN, UNKNOWN OR OF AN UNUSUAL NATURE AND THE CONDITION WILL NOT BE JUSTIFICATION FOR CHANGES TO THE WORK AS DEFINED BY THE CONTRACT FOR CONSTRUCTION.

BY SUBMISSION OF A BID THE CONTRACTOR ACKNOWLEDGES THAT IT HAS SATISFIED ITSELF AS TO THE CHARACTER, QUALITY AND QUANTITY OF MATERIALS OR OBSTACLES TO BE ENCOUNTERED INSOFAR AS THIS INFORMATION IS REASONABLY ASCERTAINABLE FROM AN INSPECTION OF THE SITE IN CONJUNCTION WITH REVIEW OF THESE DRAWINGS AND SPECIFICATIONS. ANY FAILURE OF THE CONTRACTOR TO TAKE THE ACTIONS DESCRIBED AND ACKNOWLEDGED BY THESE PARAGRAPHS WILL NOT RELIEVE THE CONTRACTOR FROM RESPONSIBILITY FOR ESTIMATING PROPERLY, THE DIFFICULTY AND COST OF SUCCESSFULLY PERFORMING THE WORK, OR FOR PROCEEDING TO SUCCESSFULLY PERFORM THE WORK WITHOUT ADDITIONAL EXPENSE TO THE OWNER.

FAILURE TO CONDUCT AN INSPECTION DOES NOT CONSTITUTE GROUNDS FOR CLAIM OF ADDITIONAL FEES TO REMOVE, PROTECT, OR PATCH VISIBLE EXISTING CONDITIONS IMPACTED BY THE WORK OF THE CONTRACT.

REGARDING HAZARDOUS MATERIALS:
IF MATERIALS SUSPECTED OF CONTAINING HAZARDOUS MATERIALS ARE ENCOUNTERED, DO NOT DISTURB; IMMEDIATELY NOTIFY THE OWNER. HAZARDOUS MATERIALS WILL BE REMOVED BY OWNER UNDER A SEPARATE CONTRACT.

THESE DRAWINGS DO NOT INCLUDE NECESSARY COMPONENTS FOR THE CONSTRUCTION SAFETY WHICH SHALL REMAIN THE RESPONSIBILITY OF THE CONTRACTOR.

ALL IDEAS, DESIGNS, ARRANGEMENTS, AND PLANS INDICATED OR REPRESENTED BY THIS INSTRUMENT ARE OWNED BY AND THE PROPERTY OF MOLZEN-CORBIN & ASSOCIATES, AND WERE CREATED AND DEVELOPED FOR USE ON AND IN CONNECTION WITH THE SPECIFIED PROJECT. THESE IDEAS, DESIGNS, ARRANGEMENTS OR PLANS SHALL NOT BE USED BY ANY PERSON, FIRM, OR CORPORATION FOR ANY PURPOSE WHATSOEVER WITHOUT THE WRITTEN CONSENT OF MOLZEN-CORBIN & ASSOCIATES.

THESE DRAWINGS REFLECT INFORMATION ON UTILITIES GATHERED BY SITE INSPECTION, DISCUSSIONS WITH MUNICIPAL OFFICIALS, AND PREVIOUS CONSTRUCTION DOCUMENTS. IT IS POSSIBLE THAT THE EXACT LOCATION OF LINES AND UTILITY CONNECTION POINTS IN THE VICINITY OF REQUIRED WORK MAY BE DIFFERENT FROM THE LOCATION SHOWN ON THESE DRAWINGS. PRIOR TO CONSTRUCTION THE CONTRACTOR SHALL EXCAVATE AND VERIFY THE HORIZONTAL AND VERTICAL LOCATIONS OF ALL OBSTRUCTIONS SHALL A CONFLICT EXIST THE CONTRACTOR SHALL NOTIFY THE ENGINEER SO THE CONFLICT CAN BE RESOLVED WITH A MINIMUM AMOUNT OF DELAY.

PROJECT MANAGER
RON SANDOVAL

ARCHITECT/LANDSCAPE ARCHITECT
Molzen Corbin
JOHN QUINN PATE, RLA / RA

CIVIL ENGINEER
Molzen Corbin
STEVEN K. MORROW, P.E.

STRUCTURAL ENGINEER
ABQ Engineering, Inc

MECHANICAL ENGINEER
Molzen Corbin
PAUL M. ROMERO, P.E.

ELECTRICAL ENGINEER
Molzen Corbin
DANIEL GONZALES, P.E.

CERTIFICATION:
I, JOHN QUINN PATE, REGISTERED PROFESSIONAL ARCHITECT NO. 1784 HEREBY CERTIFY THAT THE FOLLOWING PLANS AND DESIGNS WERE MADE UNDER MY SUPERVISION AND DIRECTION AND THAT SAME IS TRUE AND CORRECT TO THE BEST OF MY KNOWLEDGE AND BELIEF.

STATE OF NEW MEXICO
JOHN QUINN PATE
NO. 1784
REGISTERED ARCHITECT

6/12/19

N.M.R.A NO. 1784

MOLZENCORBIN
ENGINEERS | ARCHITECTS | PLANNERS
2701 Miles Road SE, Albuquerque, New Mexico 87106 505 242 5700 office 505 242 0673 fax

Molzen Corbin Project Number: SFC182-11

G-001
Sheet

I:\SANTA FE COUNTY\SFC182-11 La Puebla Fire\DWGS\2019-05-28 ALP-BPxx-.rvt
6/14/2019 11:18:20 AM

INDEX OF DRAWINGS

SHEET	SHEET NUMBER	SHEET NAME
	GENERAL	
1	G-001	COVERSHEET
2	G-002	SHEET INDEX
3	G-101	LIFE & SAFETY EGRESS PLAN & BUILDING CRITERIA
	CIVIL	
4	C-101	DEMOLITION PLAN
5	C-102	DRAINAGE PLAN
6	C-103	CIVIL SITE PLAN
7	C-104	UTILITY PLAN
8	C-501	DETAILS
9	C-502	DETAILS
	STRUCTURAL	
10	S-001	GENERAL STRUCTURAL NOTES
11	S-002	GENERAL STRUCTURAL NOTES
12	S-003	GENERAL STRUCTURAL NOTES AND DETAILS
13	S-301	FOUNDATION DETAILS
14	S-302	FRAMING DETAILS
15	S-501	TYPICAL FRAMING DETAILS
	ARCHITECTURAL	
16	A-101D	DEMOLITION FLOOR PLAN
17	A-101	FLOOR PLAN AND WALL TYPES
18	A-103	REFLECTED CEILING PLAN
19	A-104	ROOF PLAN
20	A-201	EXTERIOR ELEVATIONS
21	A-210	INTERIOR ELEVATIONS
22	A-301	BUILDING SECTIONS
23	A-310	WALL SECTIONS
24	A-401	ENLARGED KITCHEN PLAN & SCHEDULE
25	A-402	ENLARGED LAVATORY PLAN, ELEVATIONS, & SCHEDULES
26	A-501	CASEWORK DETAILS
27	A-511	ROOF DETAILS
28	A-521	WALL DETAILS
29	A-531	CEILING AND PLAN DETAILS
30	A-541	DOOR AND WINDOW DETAILS
31	A-601	SCHEDULES
	FIRE	
32	F-101	FIRE SUPPRESSION SYSTEM PLAN BASE FOR DELEGATED DESIGN
33	F-102	FIRE ALARM AND DETECTION SYSTEM BASE PLAN & DELEGATED DESIGN
	PLUMBING	
34	P-101D	PLUMBING DEMOLITION PLAN
35	P-101	PLUMBING SEWER AND VENT PLAN
36	P-102	PLUMBING WATER AND LP GAS PLAN
37	P-103	PLUMBING AND CONDENSATE DRAIN PLAN
38	P-201	PLUMBING SCHEMATICS
39	P-501	PLUMBING DETAILS
40	P-502	PLUMBING DETAILS
41	P-601	PLUMBING SCHEDULES
	MECHANICAL	
42	M-101D	HVAC DEMOLITION PLAN
43	M-101	HVAC PLAN
44	M-501	MECHANICAL DETAILS
45	M-601	MECHANICAL EQUIPMENT SCHEDULES
	ELECTRICAL	
46	E-101	DEMOLITION SITE PLAN
47	E-102	SITE PLAN MODIFICATIONS
48	E-103	POWER PLAN
49	E-104	ROOF POWER PLAN
50	E-105	LIGHTING PLAN
51	E-106	DATA PLAN
52	E-601	ONE LINE DIAGRAM AND SCHEDULES
53	E-602	MISCELLANEOUS SCHEDULES

MOLZENCORBIN

2701 Miles Road SE
Albuquerque, New Mexico 87106
505 242 5700 office
505 242 0673 fax
MolzenCorbin.com

NOTICE OF EXTENDED PAYMENT PROVISION:
THIS CONTRACT ALLOWS THE OWNER TO MAKE PAYMENT WITHIN 45 DAYS AFTER SUBMISSION OF AN UNDISPUTED REQUEST FOR PAYMENT

NUMERIC SCALE CONFIRMATION

DRAWINGS ARE DEPICTED AT INTENDED NUMERIC SCALES IF THIS BAR EQUALS ONE INCH

STATE OF NEW MEXICO
JOHN QUINN PATE
NO. 1784
REGISTERED ARCHITECT
6/12/19

REV NO	REV DATE	DESCRIPTION

PROJECT NUMBER: SFC182-11
DESIGNED BY: JSA
DRAWN BY: IWS
CHECKED BY: JQP
PRIME DESIGN PROFESSIONAL: JOHN Q. PATE
PROJECT DATE: JUNE 12, 2019

SHEET INDEX

LA PUEBLA FIRE STATION ADDITION
SANTA FE COUNTY
LA PUEBLA, NEW MEXICO

G-002
SHEET

© COPYRIGHT

6/14/2019 11:19:18 AM I:\SANTA FE COUNTY\SFC182-11 La Puebla Fire\DWGS\2019-05-28 ALP-BPxx-.rvt

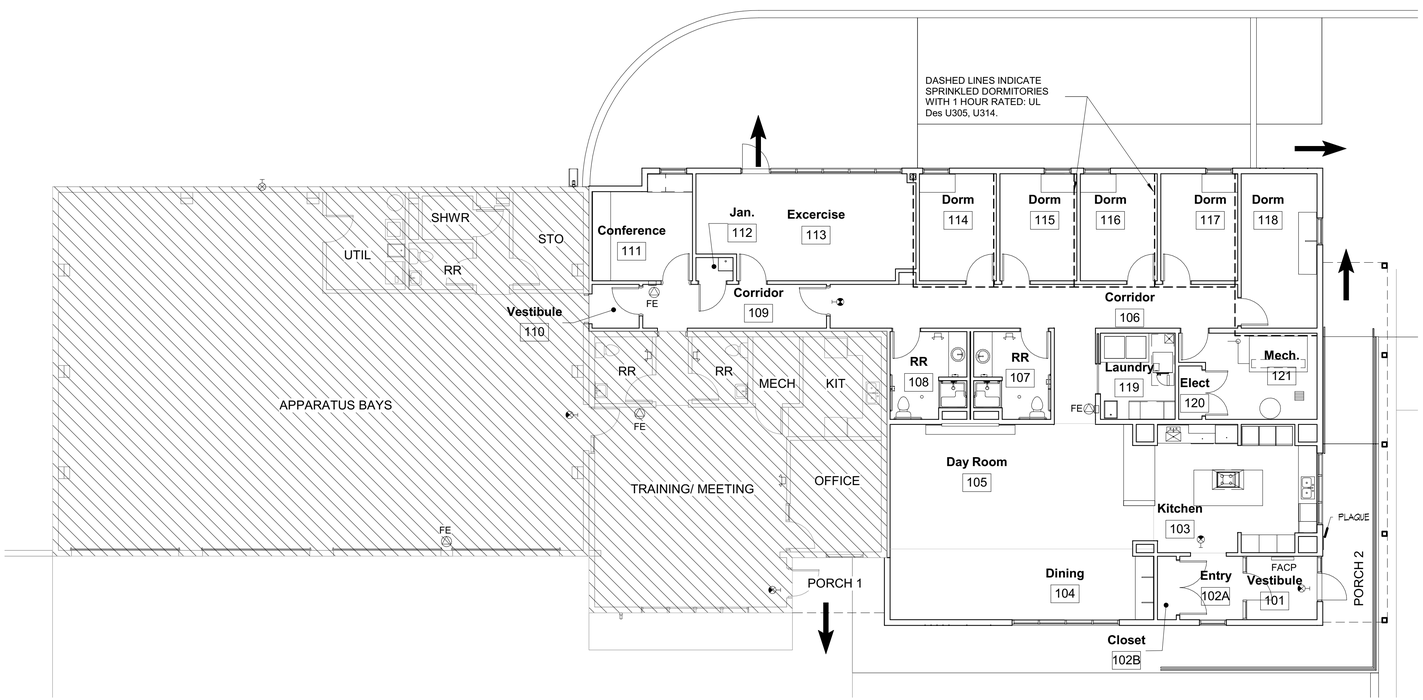

1 LIFE SAFETY AND EGRESS PLAN

Scale: 1/8" = 1'-0"

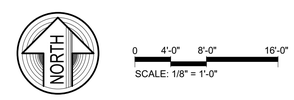

Occupancy Load Schedule

Number	Room	Area	Occupant Load Factor
101	Vestibule	57 SF	
102A	Entry	53 SF	
102B	Closet	15 SF	
103	Kitchen	240 SF	100
104	Dining	232 SF	100
105	Day Room	388 SF	100
106	Corridor	272 SF	
107	RR	79 SF	
108	RR	79 SF	
109	Corridor	102 SF	
110	Vestibule	27 SF	
111	Conference	122 SF	15
112	Jan.	11 SF	300
113	Excercise	277 SF	100
114	Dorm	103 SF	50
115	Dorm	103 SF	50
116	Dorm	103 SF	50
117	Dorm	103 SF	50
118	Dorm	147 SF	50
119	Laundry	81 SF	300
120	Elect	16 SF	300
121	Mech.	130 SF	300
Occupants		2740 SF	

Existing Occupancy Load Schedule

Number	Room	Area	Occupant Load Factor
201	Apparatus Bays	2017 SF	200
202	Utility Room	96 SF	300
203	RR	37 SF	
204	Shower	27 SF	
205	Storage	4 SF	300
206	Storage	84 SF	300
207	Corridor	35 SF	
208	Traning / Meeting	482 SF	20
209	RR	48 SF	
210	Janitor	9 SF	300
211	RR	47 SF	
212	Corridor	18 SF	
213	Mechanical	39 SF	300
214	Kitchen	103 SF	100
215	Office	129 SF	100
Occupants		3175 SF	

LEGEND:

- EXISTING 1-HOUR FIRE RATED CONSTRUCTION
- EXIT
- FE — FIRE EXTINGUISHER LOCATION
- EMERGENCY EGRESS LIGHT FIXTURE WITH BATTERY PACK & OUTLET
- ILLUMINATED EXIT SIGNAGE

BUILDING CRITERIA

LA PUEBLA FIRE STATION

DESIGNED TO MEET:
2015 NMCBC/IBC
2009 NMECC/IECC
2015 NMPC/UPC
2015 NMMC/UMC, AND IFC
2017 NMEC/NEC
2009 ANSI A117.1 CURRENT EDITION

TYPE

BUILDING USE — FIRE STATION

OCCUPANCY CLASSIFICATION:

PER 14.7.2.11 NMAC, NMCBC CLASSIFIES FIRESTATIONS AS A BUSINESS: B
SLEEPING ROOMS WILL BE CONSIDERED CONGREGATE LIVING AREAS : R-2
APPARATUS BAYS AS A STORAGE: S-1

TYPE OF CONSTRUCTION — COMBUSTIBLE VB

BUILDING ATTRIBUTES IBC CHAPTER 5

NEW CONSTUCTION BUILDING FLOOR AREA - SEPARATED MIXED OCCUPANCY
B - Non Sprinklered — 2,122 SF
R-2 - Sprinklered; 1 Hour Seperation per IBC 508.4; Seperated Occupancies — 572 SF
TOTAL ADDITION AREA — 2,694 SF

EXISTING CONSTUCTION BUILDING FLOOR AREA
B - Non Sprinklered — 874 SF
S-1 - Non Sprinklered — 2 ,301 SF
TOTAL EXISTING AREA — 3,175 SF

COMBINED TOTAL AREA ADDITION + EXISTING — 5,869 SF

PORCH 1 AND PORCH 2 — 342 SF

ACTUAL NUMBER OF STORIES — SINGLE STORY
ACTUAL BUILDING HEIGHT — 28 FT
ALLOWABLE AREA PER FLOOR FOR B CLASSIFICATION — 9,000 SF
(MOST RESTRICTIVE CLASSIFICATION)
ALLOWABLE BUILDING HEIGHT — 40 FT

EXTERIOR PROTECTION

FIRE SEPARATION DISTANCES — 15 FT ON NORTH TO THE PROPERTY LINE; >30 FT ON EAST, SOUTH, AND WEST TO THE PROPERTY LINE

FIRE RESISTANCE RATING FOR EXTERIOR WALLS BASED ON DISTANCE — NOT REQUIRED

INTERIOR PROTECTION

PORTABLE FIRE EXTINGUISHERS PER IFC SECTION 906 — REQUIRED: 2A UNITS EA 1500 SF FLOOR AREA; 8A UNITS AT 75FT MAX SPACING REQUIRED; 2 - 4A:80B:C EXTINGUISHERS PROVIDED

AUTOMATIC FIRE SUPPRESSION — FIRE PROTECTION SYSTEMS WILL BE DESIGNED
FIRE DETECTION AND FIRE ALARM SYSTEMS — AND CONSTRUCTED WITH THE PROJECT

FIRE SEPARATIONS: — FIRE PARTITIONS: 1 HR AROUND SLEEPING ROOMS; FIRE DAMPERS ARE REQUIRED

DESIGN OCCUPANT LOAD MEANS OF EGRESS

FUNCTION OF SPACE / SF PER OCCUPANT	OCCUPANT LOAD	
BUSINESS AREA AT 100 GROSS SF	BUSINESS 1383 SF / 100 SF PER OCCUPANT	= 14
	CONFERENCE 121 SF / 20 SF PER OCCUPANT	= 8
	TRAINING RM 482 SF / 20 SF PER OCUPANT	= 24
SLEEPING ROOM	DOMITORIES 568 SF / 50 SF PER OCCUPANT	= 11
APPARATUS AND EQUIPMENT RM	STORAGE 2195 SF / 300 SF PER OCCUPANT	= 10
STORAGE	STORAGE 122 SF / 300 SF PER OCCUPANT	= 1
ACCESSORY AREA		
MECHANICAL / ELECTRICAL	85 SF / 300 SF PER OCCUPANT	= 1
TOILET FACILITES	318 SF	
CIRCULATION	547 SF	
TARE / COVER PORCH(S)	542 SF	
TOTAL OCCUPANT LOAD		70

MEANS OF EGRESS REQUIRED AT 36" WIDE EACH: 2
EXITS TO PUBLIC WAY PROVIDED: 3

PLUMBING FIXTURES TABLES 2902.1

PLUMBING FACILITIES CLASSIFICATION:
BUSINESS — OCCUPANT LOAD = 40; 35 MEN / 35 WOMEN
WATER CLOSETS REQUIRED: — 1/25 FOR FIRST 50 AND 1/50 FOR REMAINDER = 3 TOTAL
WATER CLOSETS PROVIDED: — 5 TOTAL
LAVATORIES REQUIRED: — 1/40 FOR FIRST 80 AND 1/80 FOR REMAINDER = 2 TOTAL
LAVATORIES PROVIDED: — 5 TOTAL
DRINKING FOUNTAIN REQUIRED: — 1 PER 100 = 1 TOTAL
DRINKING FOUNTAINS PROVIDED: — BOTTLED WATER PROVIDED & BOTTLE FILLER
SERVICE SINKS REQUIRED: — 1 SERVICE SINK
SERVICE SINKS AND OTHER FIXTURES PROVIDED: — 1 JANITOR, 1 LAUNDRY, (3) KITCHEN SINKS, 2 SHOWERS

INSULATION VALUES NMECC

CLIMATE ZONE: — LA PUEBLA, SANTA FE COUNTY, NEW MEXICO, ZONE 5B
ROOF: — R-20 MIN CONTINUOUS ABOVE
WOOD FRAMED WALLS: — R 13 MIN IN CAVITY PLUS 3.8 MIN CONTINUOUS INSULATION
METAL FRAMED WALLS: — R 13 MIN IN CAVITY PLUS 7.5 MIN CONTINUOUS INSULATION
PERIMETER: — R -7.5 CONTINOUS INSULATION
SLAB: — NOT REQUIRED
OPENINGS: — U-0.70 MAX, FOR SWING DOORS; U-0.50 MAX FOR ROLL UP DOORS

ACCESSIBILITY
BUILDING AND VISITOR PARKING ARE DESIGNED TO MEET CURRENT ADA, ANSI

MOLZENCORBIN
2701 Miles Road SE
Albuquerque, New Mexico 87106
505 242 5700 office
505 242 0673 fax
MolzenCorbin.com

NOTICE OF EXTENDED PAYMENT PROVISION:
THIS CONTRACT ALLOWS THE OWNER TO MAKE PAYMENT WITHIN 45 DAYS AFTER SUBMISSION OF AN UNDISPUTED REQUEST FOR PAYMENT

NUMERIC SCALE CONFIRMATION
DRAWINGS ARE DEPICTED AT INTENDED NUMERIC SCALES IF THIS BAR EQUALS ONE INCH

STATE OF NEW MEXICO — JOHN QUINN PATE NO. 1784 — REGISTERED ARCHITECT — 6/26/19

REV NO	REV DATE	DESCRIPTION

PROJECT NUMBER: SFC182-11
DESIGNED BY: JSA
DRAWN BY: IWS
CHECKED BY: JQP
PRIME DESIGN PROFESSIONAL: JOHN Q. PATE
PROJECT DATE: JUNE 12, 2019

LIFE & SAFETY EGRESS PLAN & BUILDING CRITERIA

LA PUEBLA FIRE STATION ADDITION
SANTA FE COUNTY
LA PUEBLA, NEW MEXICO

G-101
SHEET

© COPYRIGHT

I:\SANTA FE COUNTY\SFC182-11 La Puebla Fire\DWGS\2019-05-28 ALP-BPxx-.rvt
6/26/2019 8:14:17 AM

CAUTION:
NOTE THAT ALL EXISTING UTILITIES MAY NOT BE SHOWN. EXISTING SERVICE CONNECTIONS ARE NOT SHOWN. ANY EXISTING UTILITIES THAT ARE SHOWN ARE SHOWN IN APPROXIMATE LOCATION ONLY. IT SHALL BE THE RESPONSIBILITY OF THE CONTRACTOR TO CONTACT ALL THE UTILITY OWNERS AND TO CONDUCT ALL NECESSARY FIELD INVESTIGATIONS PRIOR TO ANY EXCAVATION TO DETERMINE THE ACTUAL LOCATION OF UTILITIES AND OTHER IMPROVEMENTS.

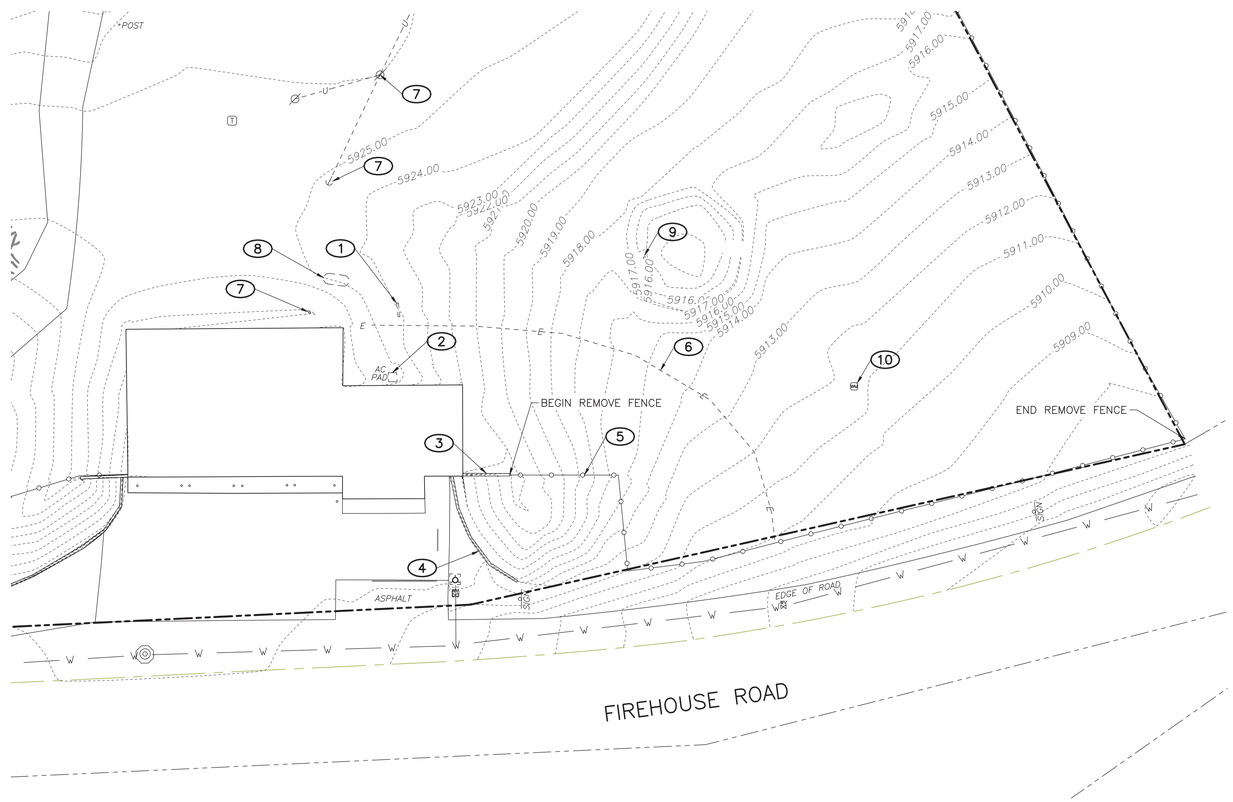

KEYED NOTES

1. REMOVE AND DISPOSE OF ELECTRICAL PANEL, SEE E-101.
2. REMOVE AND RELOCATE AC AND PAD, SEE M-101 AND E-101.
3. REMOVE AND DISPOSE OF WINGWALL.
4. REMOVE AND DISPOSE OF RETAINING WALL.
5. REMOVE FENCE (L=217.57').
6. REMOVE AND DISPOSE OF ELECTRIC SERVICE.
7. RELOCATE ANTENNA.
8. REMOVE AND RELOCATE PROPANE TANK.
9. REMOVE AND DISPOSE OF SEPTIC TANK.
10. REMOVE AND DISPOSE OF WATER METER.

LEGEND:

BEARINGS ARE ON BOUNDARY SURVEY PREPARED FOR SANTA FE COUNTY, SHOWING LOT 23, WITHIN LA PUEBLA SANTA FE NEW MEXICO RECORDED FEBRUARY 13, 2018 IN PLAT Bk.829, Pg.40 OFFICE OF THE SANTA FE COUNTY CLERK.

ELEVATIONS ARE BASED ON SANTA FE CONTROL MONUMENT SF-7. PUBLISHED ELEVATION OF 5786.31.

- *DENOTES GOVERNMENT MONUMENT AS SHOWN*
- *F DENOTES FOUND REBAR AS SHOWN*
- *DENOTES CAP/REBAR SET THIS SURVEY AS SHOWN*
- *WM DENOTES WATER METER*
- *WV DENOTES WATER VALVE*
- *DENOTES FIRE HYDRANT*
- *T DENOTES TELEPHONE BOX*
- *—U— —OH— DENOTES OVERHEAD UTILITY LINE, POLE & ANCHOR*
- *—E— DENOTES BURIED ELECTIC LINE MARKERS*
- *DENOTES CHAIN LINK FENCE*
- *DENOTES BOUNDARY OF LANDS DEALT WITH BY THIS PLAT INFORMATION OUTSIDE OF THIS BOUNDARY IS BACKGROUND INFORMATION ONLY, NOT VERIFIED FOR ACCURACY AND IS NOT PART OF THIS PLAT.*

UTILITY MARKER WERE PRESENT ON SITE AT THE TIME OF THIS SURVEY, DAWSON SURVEYS MAKES NO STATEMENT AS TO THE ACCURACY OF THEIR LOCATION.

THIS MAP SUBJECT TO ALL VALID RESTRICTIONS, COVENANTS AND EASEMENTS OF RECORD.

MOLZENCORBIN
2701 Miles Road SE
Albuquerque, New Mexico 87106
505 242 5700 office
505 242 0673 fax
MolzenCorbin.com

NUMERIC SCALE CONFIRMATION
DRAWINGS ARE DEPICTED AT INTENDED NUMERIC SCALES
IF THIS BAR EQUALS ONE INCH

STEVEN K. MORROW NEW MEXICO 13679 PROFESSIONAL ENGINEER
6-13-19

REV NO.	REV DATE	DESCRIPTION

PROJECT NUMBER: SFC182-11
DESIGNED BY: SRL
DRAWN BY: SRL
CHECKED BY: SKM
PRIME DESIGN PROFESSIONAL: JOHN Q. PATE
PROJECT DATE: JUNE 2019

DEMOLITION PLAN

LA PUEBLA FIRE STATION ADDITION
SANTA FE COUNTY
LA PUEBLA, NEW MEXICO

C-101
SHEET

© COPYRIGHT

PLOT DATE: 6/13/2019 1:05 PM
SAVE DATE: 6/12/2019 11:51 AM
I:\SANTA FE COUNTY\SFC182-11 LA PUEBLA FIRE\DWGS\C-101

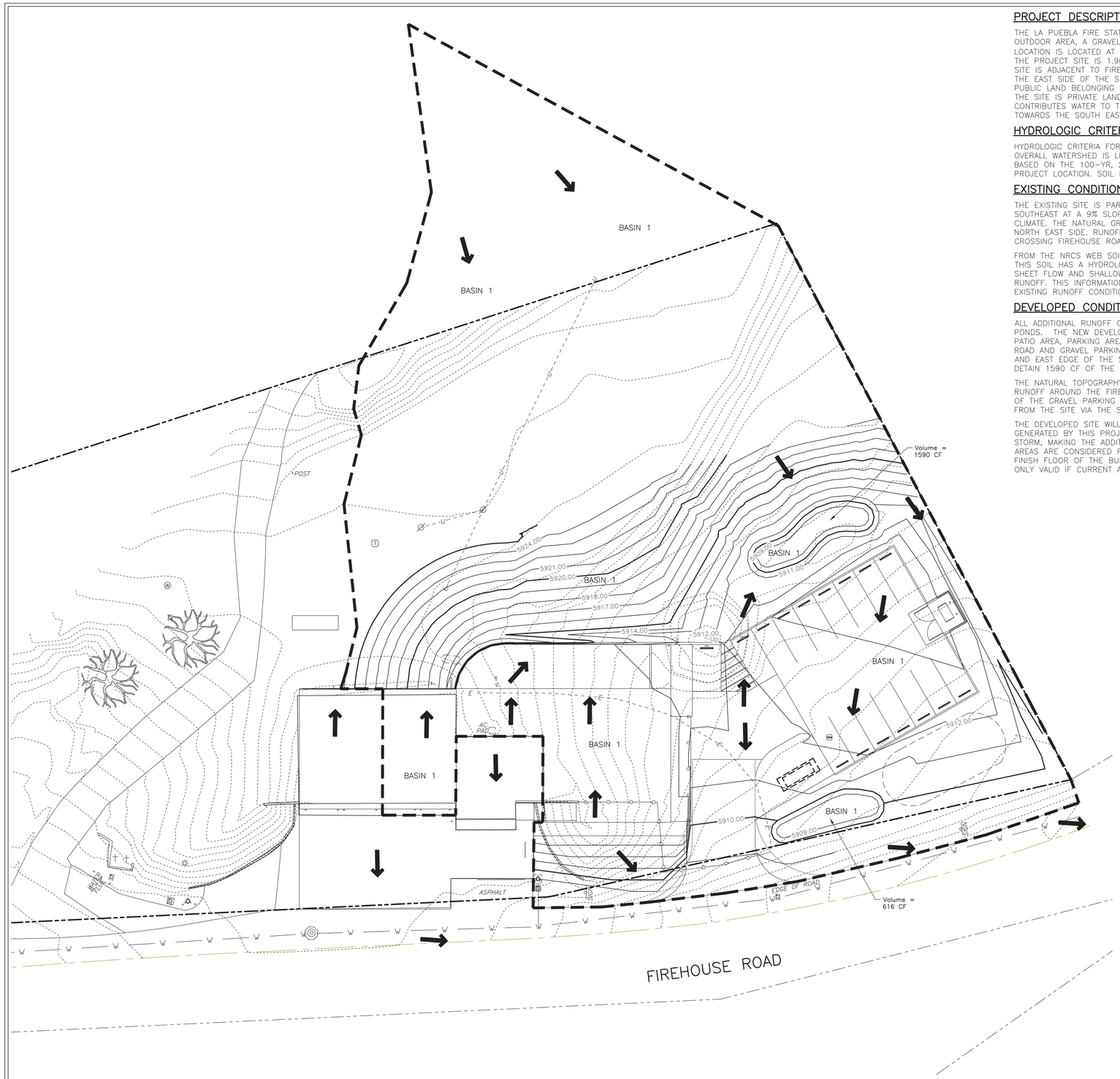

PROJECT DESCRIPTION & SITE LOCATION:

THE LA PUEBLA FIRE STATION ADDITION PROJECT CONSISTS OF A NEW ADDITION PAVED ACCESS ROAD, PAVED ADA SPACES, OUTDOOR AREA, A GRAVEL PARKING AREA, DRAINAGE DETENTION PONDS, AND A NEW SEPTIC SYSTEM. THE PROJECT LOCATION IS LOCATED AT #31 FIREHOUSE RD. IN THE VILLAGE OF LA PUEBLA EAST OF ESPANOLA, NM. THE LOT SIZE OF THE PROJECT SITE IS 1.90 ACRES, WHILE IMPROVEMENTS WILL BE MADE TO APPROXIMATELY 0.67 ACRES. THE PROJECT SITE IS ADJACENT TO FIREHOUSE ROAD, AND BOUNDED ON ITS SOUTH SIDE BY THE RIGHT OF WAY OF FIREHOUSE ROAD. THE EAST SIDE OF THE SITE IS BOUND BY THE PUBLIC PROPERTY OF THE COMMUNITY CENTER. THE NORTH BOUNDARY IS PUBLIC LAND BELONGING TO THE QUATRO VILLAS MUTUAL DOMESTIC WATER USERS ASSOCIATION. THE WEST BOUNDARY OF THE SITE IS PRIVATE LAND. ALL CONSTRUCTION SHALL REMAIN WITHIN THE SITE. THE OFFSITE WATERSHED BASIN THAT CONTRIBUTES WATER TO THIS SITE IS RELATIVELY SMALL AT 0.19 ACRES, AND FLOWS FROM UPHILL OF THE SITE, SOUTH TOWARDS THE SOUTH EAST CORNER OF THE SITE, WHERE IT CROSSES FIREHOUSE ROAD

HYDROLOGIC CRITERIA:

HYDROLOGIC CRITERIA FOR THIS DRAINAGE REPORT WERE DETERMINED USING THE NRCS TR-55 RUNOFF METHOD. THE OVERALL WATERSHED IS LESS THAN 40 ACRES, WHICH ALLOWS FOR THIS METHOD. HYDROLOGIC CALCULATIONS WERE BASED ON THE 100-YR, 24-HR STORM AND PRECIPITATION DATA COLLECTED FROM THE NOAA ATLAS SPECIFIC TO THE PROJECT LOCATION. SOIL INFORMATION FOR THE SITE WAS OBTAINED USING THE NRCS WEB SOIL SURVEY.

EXISTING CONDITIONS:

THE EXISTING SITE IS PARTIALLY DEVELOPED, THE TERRAIN IS HILLY, SLOPING GENERALLY FROM NORTHWEST TO SOUTHEAST AT A 9% SLOPE. THE EXISTING PROJECT SITE IS CLASSIFIED AS PINION-JUNIPER RANGELAND IN A SEMIARID CLIMATE. THE NATURAL GRADE OF THE SITE IS FAIRLY STEEP. THE BASIN DRAINS AROUND THE FIRES STATION ON THE NORTH EAST SIDE. RUNOFF THAT CONTRIBUTES TO THE ROADSIDE DITCH COMES FROM SITE AND ADJACENT PARK, CROSSING FIREHOUSE ROAD INTO AN EXISTING DRAINAGE.

FROM THE NRCS WEB SOIL SURVEY THE SOIL IS AN OJITO-KOSHARE-QUARTELES COMPLEX, 5 TO 50 PERCENT SLOPES. THIS SOIL HAS A HYDROLOGIC RATING OF B, WHICH CORRELATES TO A CURVE NUMBER OF 73. MANNINGS EQUATION FOR SHEET FLOW AND SHALLOW CONCENTRATED FLOW WERE USED FOR ESTIMATING LAG TIME OF THE ON AND OFFSITE RUNOFF. THIS INFORMATION WAS INPUTTED INTO THE HEC-HMS HYDROLOGIC MODELING PROGRAM TO COMPUTE THE EXISTING RUNOFF CONDITIONS.

DEVELOPED CONDITIONS:

ALL ADDITIONAL RUNOFF GENERATED BY THIS PROJECT IN THE 100-YR, 24-HR STORM WILL BE STORED IN DETENTION PONDS. THE NEW DEVELOPMENT WILL INCLUDE THE CONSTRUCTION OF AN ADDITION TO THE EXISTING FIRE STATION, REAR PATIO AREA, PARKING AREA, NEW SEPTIC TANK, AND DETENTION PONDS. IN ADDITION TO THE BUILDING, A GRAVEL ACCESS ROAD AND GRAVEL PARKING AREA WILL BE CONSTRUCTED. A DRAINAGE SWALE WILL BE CONSTRUCTED ALONG THE NORTH AND EAST EDGE OF THE SITE, TO DIRECT OFFSITE RUNOFF AWAY FROM THE SITE. The POND NORTH OF THE SITE WILL DETAIN 1590 CF OF THE GENERATED DISCHARGE, AND THE SOUTH POND WILL DETAIN 616 CF.

THE NATURAL TOPOGRAPHY DRAINS THROUGH THE SITE. THE SITE WILL BE GRADED IN A MANNER THAT DIVERTS THE RUNOFF AROUND THE FIRE STATION. THE NEWLY CONSTRUCTED SITE WILL DRAIN ITS RUNOFF TO THE NEW POND NORTH OF THE GRAVEL PARKING AREA, THE PARKING AREA WILL DRAIN TO THE NEW POND SOUTHWEST OF THE LOT, OR AWAY FROM THE SITE VIA THE SWALE.

THE DEVELOPED SITE WILL GENERATE ROUGHLY 2.1 CFS IN THE 100-YR, 24-HR STORM, MAKING THE ADDITIONAL RUNOFF GENERATED BY THIS PROJECT .03 CFS. THE DEVELOPED SITE WILL PRODUCE .147 AC-FT FROM THE 100-YR, 24-HR STORM, MAKING THE ADDITIONAL VOLUME PRODUCED BY THIS PROJECT 0.047 AC-FT OR 2047.5 CU. FT. THE OFFSITE AREAS ARE CONSIDERED FULLY DEVELOPED PUBLIC LANDS AND ARE UNCHANGED FROM THE EXISTING CONDITIONS. THE FINISH FLOOR OF THE BUILDING IS 5913.86, AND THE SITE IS NOT IN A MAPPED FLOOD ZONE. THIS DRAINAGE PLAN IS ONLY VALID IF CURRENT AND NEW DRAINAGE STRUCTURES ARE MAINTAINED.

SITE CONDITIONS

DESCRIPTION	AREA (ACRES)	RUNOFF VOLUME (ACRE-FT)	PEAK DISCHARGE (CFS)
EXISTING CONDITION	1.90	0.10	1.8
DEVELOPED CONDITION BASIN 1 TO POND	1.90	0.15	2.1

LEGEND

5321	EX. INTERMEDIATE CONTOUR
5326.5	PROPOSED INDEX CONTOUR
5326.5	PROPOSED INTERMEDIATE CONTOUR
	DRAINAGE BASIN BOUNDARY
	FLOW DIRECTION ARROW
BASIN-X	DRAINAGE BASIN IDENTIFIER

0 2' 5' 10' 20' 40'
1"=20'-0"

N

MOLZENCORBIN
2701 Miles Road SE
Albuquerque, New Mexico 87106
505 242 5700 office
505 242 0673 fax
MolzenCorbin.com

NUMERIC SCALE CONFIRMATION
DRAWINGS ARE DEPICTED AT INTENDED NUMERIC SCALES
IF THIS BAR EQUALS ONE INCH

STEVEN R. MORROW NEW MEXICO 13679 REGISTERED PROFESSIONAL ENGINEER
6-13-19

REV NO	REV DATE	DESCRIPTION

PROJECT NUMBER: SFC182-11
DESIGNED BY: SRL
DRAWN BY: SRL
CHECKED BY: SKM
PRIME DESIGN PROFESSIONAL: JOHN Q. PATE
PROJECT DATE: JUNE 2019

DRAINAGE PLAN

LA PUEBLA FIRE STATION ADDITION
SANTA FE COUNTY
LA PUEBLA, NEW MEXICO

C-102
SHEET

© COPYRIGHT

PLOT DATE: 6/13/2019 1:06 PM
SAVE DATE: 6/13/2019 11:38 AM
I:\SANTA FE COUNTY\SFC182-11 LA PUEBLA FIRE\DWGS\CLP-102

CONSTRUCTION NOTES

1. FOR DRAWING SYMBOLS AND LEGEND, SURVEY CONTROL, SEE SHEET C–101.
2. FOR EXISTING UTILITIES, SEE SHEET C–101.
3. FOR DEMOLITION AND REMOVALS PLAN, SEE SHEET C–101.

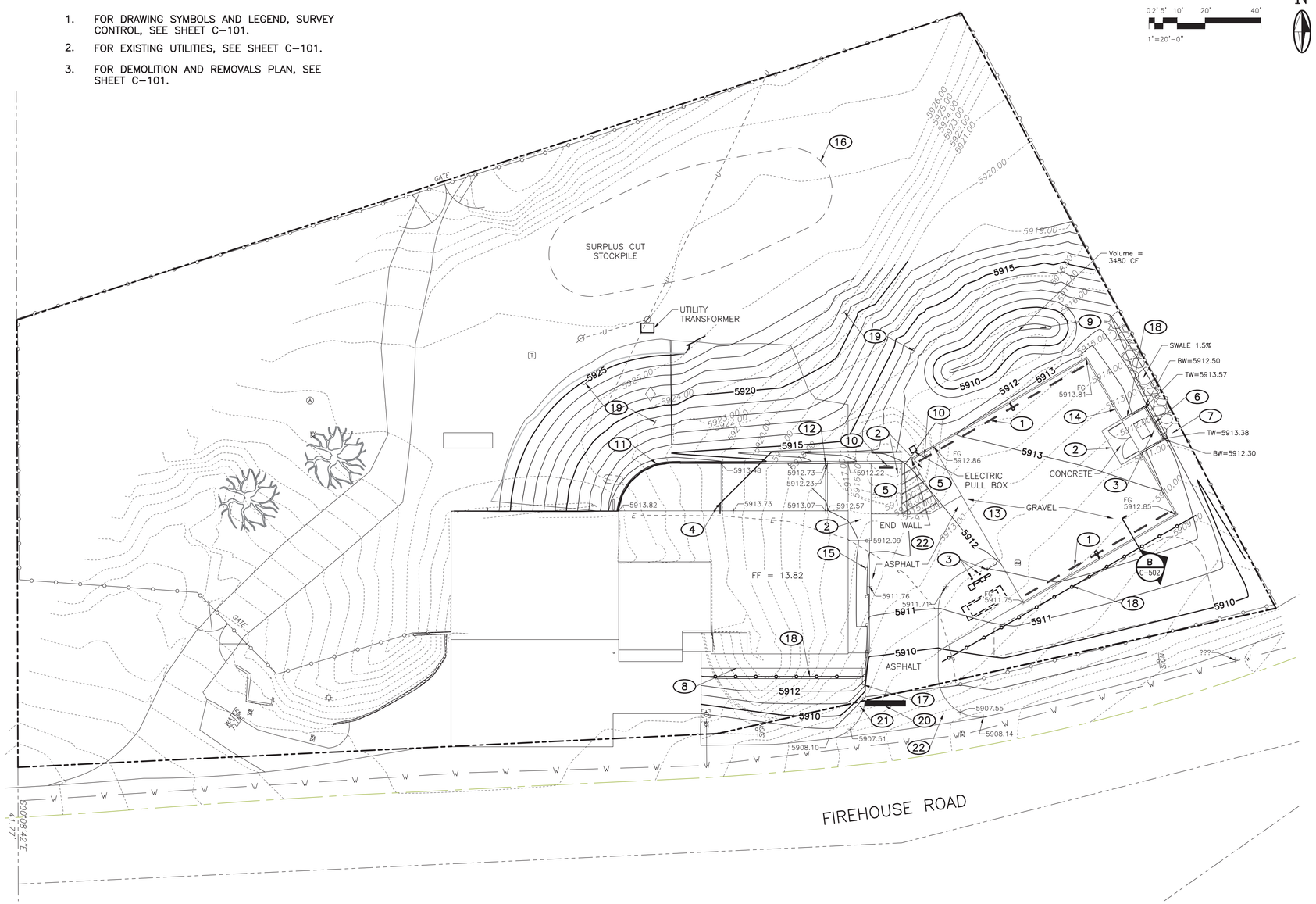

KEYED NOTES

1. WHEEL STOP, SEE SHEET C–501.
2. 6" CONCRETE SLAB, SEE SHEET C–501.
3. BOLLARDS, SEE SHEET C–501.
4. ROOF DRAIN, SEE SHEET C–104.
5. ADA PARKING SPOTS, SEE SHEET G–111.
6. REFUSE ENCLOSURE DETAIL, SEE SHEET C–501.
7. RIP RAP SWALE, SEE SHEET C–502.
8. SIDEWALK DETAIL, SEE SHEET C–502.
9. DETENTION POND.
10. HANDICAP SIGN R7–8, "RESERVED PARKING", WITH SYMBOL.
11. RETAINING WALL, SEE DETAIL SHEET S–502. (HEIGHT = 48")
12. RETAINING WALL, SEE DETAIL SHEET S–502. (TRANSITION HEIGHT = 24")
13. 6" GRAVEL PAVING DETAIL, SEE SHEET C–502.
14. 6" CURB AROUND GRAVEL PAVING DETAIL, SEE SHEET C–502.
15. ROOF SUPPORT, SEE SHEET C–501,S–301.
16. EXCESS DIRT TO BE MOVED TO STOCKPILE.
17. RETAINING WALL, SEE DETAIL 9 SHEET S–301.
18. COYOTE FENCE, SEE SHEET C–501. (L=196'–0")
19. REVEGETATIVE SEEDING OF DISTURBED AREAS.
20. APPLY 24" WIDE SOLID WHITE PAVEMENT MARKING (STOP BAR).
21. INSTALL NEW BASE, POST AND STOP SIGN (R1–1).
22. 4" SPIV ASPHALT PAVING, SEE SHEET C–501.

MOLZENCORBIN
2701 Miles Road SE
Albuquerque, New Mexico 87106
505 242 5700 office
505 242 0673 fax
MolzenCorbin.com

NUMERIC SCALE CONFIRMATION
DRAWINGS ARE DEPICTED AT INTENDED NUMERIC SCALES
IF THIS BAR EQUALS ONE INCH

STEVEN R. MORROW NEW MEXICO 13879 REGISTERED PROFESSIONAL ENGINEER 8-6-19

REV NO	REV DATE	DESCRIPTION

PROJECT NUMBER:	SFC182–11
DESIGNED BY:	SRL
DRAWN BY:	SRL
CHECKED BY:	SKM
PRIME DESIGN PROFESSIONAL:	JOHN Q. PATE
PROJECT DATE:	JUNE 2019

CIVIL SITE PLAN

LA PUEBLA FIRE STATION ADDITION
SANTA FE COUNTY
LA PUEBLA, NEW MEXICO

C-103
SHEET

PLOT DATE: 8/6/2019 4:07 PM
SAVE DATE: 8/6/2019 12:48 PM
I:\SANTA FE COUNTY\SFC182-11 LA PUEBLA FIRE\DWGS\CLP-103

© COPYRIGHT

CONSTRUCTION NOTES

1. FOR DRAWING SYMBOLS AND LEGEND, SURVEY CONTROL, SEE SHEET C–101.
2. FOR EXISTING UTILITIES, SEE SHEET C–101.
3. FOR DEMOLITION AND REMOVALS PLAN, SEE SHEET C–101.
3. CONTRACTOR SHALL CONTACT VENCES ABEYTA OF THE CUATRO VILLAS MDWUA AT (505) 660–5577 PRIOR TO CONSTRUCTION. CONTRACTOR SHALL COORDINATE WITH CUATRO VILLAS MDWUA TO ARRANGE FOR A CUATRO VILLAS REPRESENTATIVE TO BE ONSITE DURING INSTALLATION OF WATERLINE IN THE PUBLIC RIGHT–OF–WAY.

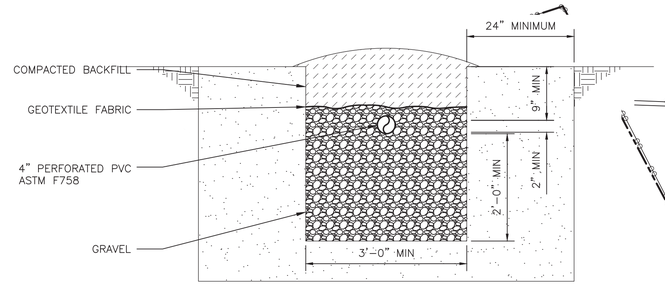

GENERAL NOTES FOR DISPOSAL FIELD TRENCH:
1. NMED AUTHORIZATION REQUIRED PRIOR TO BACKFILLING OVER AGGREGATE AND GEOTEXTILE FABRIC.
2. SEE SPECIFICATIONS FOR MATERIAL REQUIREMENTS.

DISPOSAL FIELD TRENCH DETAIL
N.T.S.

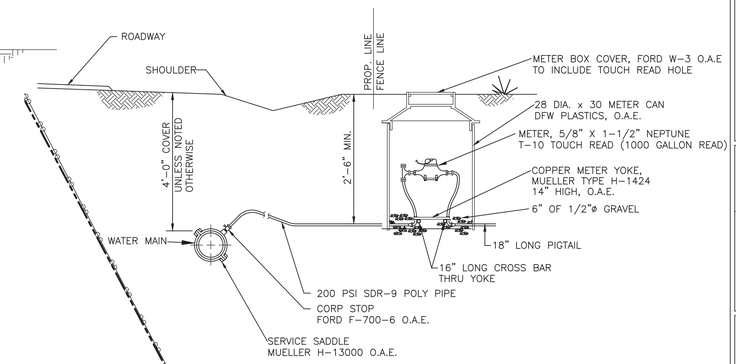

WATER SERVICE CONNECTION DETAIL
N.T.S.

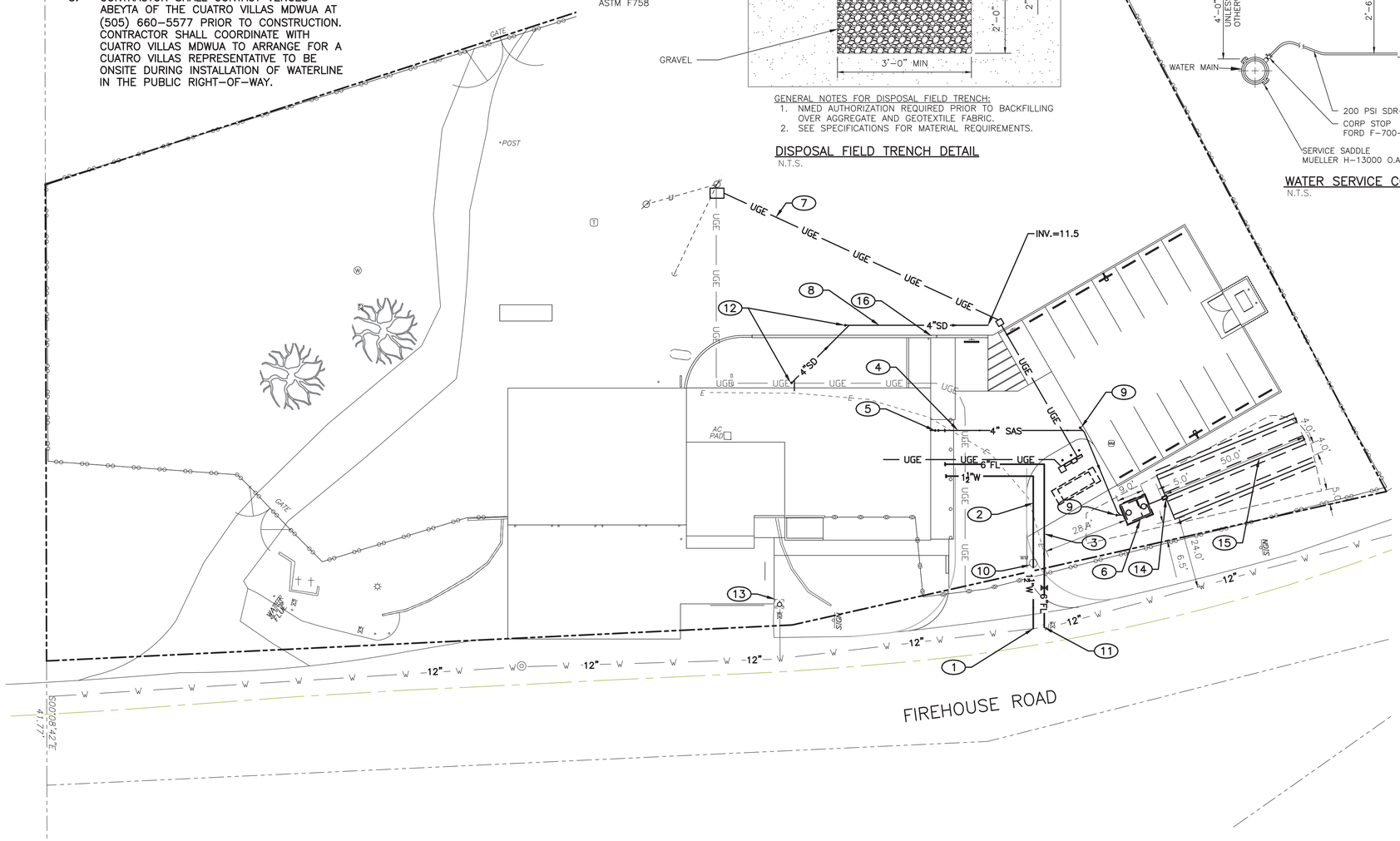

NOTES:
ALL MJ FITTINGS SHALL HAVE MEGALUG™ MJ RESTRAINTS

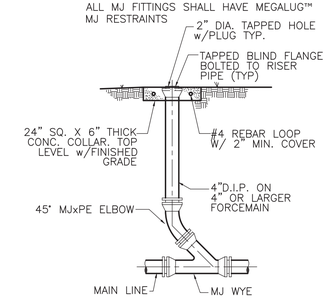

SINGLE TRAFFIC RATED CLEAN–OUT
N.T.S.

LEGEND

–U–	OVERHEAD ELECTRIC
–W–	EXISTING WATER
–G–	EXISTING GAS
SAS	EXISTING SEWER
–E–	EXISTING BURIED ELECTRIC
WM	EXISTING WATER METER
	EXISTING WATER MANHOLE
	EXISTING WATER VALVE
6"FL	NEW 6" DUCTILE IRON FIRE WATERLINE @ 3' MIN. BURY w/ MEGALUG RESTRAINTS
1–1/2"W	NEW 1–1/2" SCH 80 PVC OR HDPE DR9 WATERLINE @ 3' MIN. BURY.
4"SD	NEW 4" STORM DRAIN
WM	NEW 1–1/2" WATER METER
	NEW 6" GATE VALVE w/ RESTRAINTS

KEYED NOTES

1. WET TAP CONNECT 1 1/2" WATERLINE TO EXISTING 12" WATERLINE WITH SADDLE TAP AND CORP STOP.
2. 1–1/2" SCHEDULE 80 PVC WATERLINE, 3' MINIMUM COVER, COLD WATER SUPPLY. SEE SHEET P–102 FOR BUILDING CONNECTION.
3. 6" FIRE PROTECTION SUPPLY. SEE SHEET P–102 FOR BUILDING CONNECTION.
4. 4" SDR 35 PVC SANITARY SEWER, 3' MINIMUM COVER, CONNECT TO NEW SEPTIC SYSTEM.
5. 4" SANITARY DOUBLE CLEANOUT, SEE SHEET P–502.
6. 1500 GALLON H–20 RATED SEPTIC TANK INSTALLED CIP, ALBUQUERQUE VAULT O.A.E.
7. ELECTRICAL CONDUIT, SEE SHEET E–102
8. 4" HDPE PIPE, CONNECT TO ROOF DRAIN MAINTAIN 2% MIN. SLOPE. 10" MIN BURY.
9. 4" HDPE CLEAN OUT, TRAFFIC RATED, SEE DETAIL THIS SHEET.
10. 1–1/2" WATER METER AND ENCLOSURE. CONTRACTOR SHALL COORDINATE WITH THE CUATRO VILLAS MDWUA TO ORDER METER AND FINALIZE INSTALLATION. CONTACT VENCES ABEYTA (505) 660–5577.
11. WET TAP CONNECT 6" FIRE WATERLINE TO EXISTING 12" WATERLINE WITH TAPPING SLEEVE, VALVE, AND VALVE BOX.
12. 4" HDPE CLEAN OUT, ADS OR ERE. SEE DETAIL C–502.
13. EXISTING FIRE HYDRANT TO REMAIN UNDISTURBED
14. DISTRIBUTION BOX
15. (3) SEPTIC SYSTEM DISPOSAL FIELD LINES, 50' LENGTH, SEE DETAIL THIS SHEET.
16. ABANDON EXISTING SEPTIC SYSTEM PER NMED STANDARDS

0 2' 5' 10' 20' 40'
1"=20'–0"

N

CAUTION:
NOTE THAT ALL EXISTING UTILITIES MAY NOT BE SHOWN. EXISTING SERVICE CONNECTIONS ARE NOT SHOWN. ANY EXISTING UTILITIES THAT ARE SHOWN ARE SHOWN IN APPROXIMATE LOCATION ONLY. IT SHALL BE THE RESPONSIBILITY OF THE CONTRACTOR TO CONTACT ALL THE UTILITY OWNERS AND TO CONDUCT ALL NECESSARY FIELD INVESTIGATIONS PRIOR TO ANY EXCAVATION TO DETERMINE THE ACTUAL LOCATION OF UTILITIES AND OTHER IMPROVEMENTS.

MOLZENCORBIN
2701 Miles Road SE
Albuquerque, New Mexico 87106
505 242 5700 office
505 242 0673 fax
MolzenCorbin.com

NUMERIC SCALE CONFIRMATION
DRAWINGS ARE DEPICTED AT INTENDED NUMERIC SCALES
IF THIS BAR EQUALS ONE INCH

STEVEN R. MORRON NEW MEXICO 13679 REGISTERED PROFESSIONAL ENGINEER
11-14-19

REV NO	REV DATE	DESCRIPTION

PROJECT NUMBER: SFC182–11
DESIGNED BY: SRL
DRAWN BY: SRL
CHECKED BY: SKM
PRIME DESIGN PROFESSIONAL: JOHN Q. PATE
PROJECT DATE: JUNE 2019

UTILITY PLAN

LA PUEBLA FIRE STATION ADDITION
SANTA FE COUNTY
LA PUEBLA, NEW MEXICO

C-104
SHEET

© COPYRIGHT

PLOT DATE: 11/4/2019 4:29 PM
SAVE DATE: 9/26/2019 1:32 PM
U:\SANTA FE COUNTY\SFC182-11 LA PUEBLA FIRE\DWGS\CLP-104

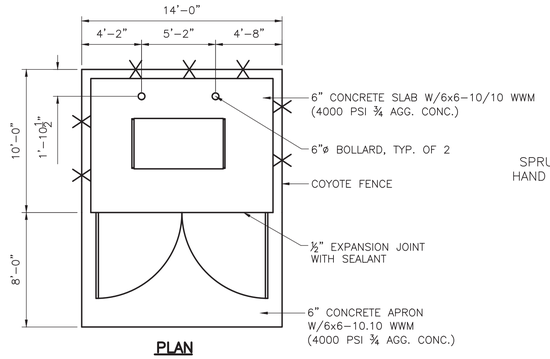

PLAN

A C-103 REFUSE ENCLOSURE PLAN

SCALE: NONE

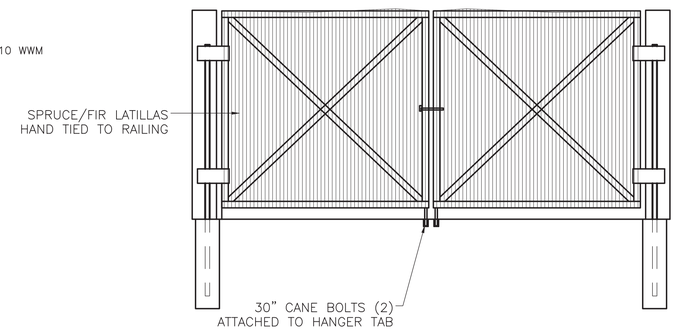

ELEVATION

REFUSE ENCLOSURE GATES

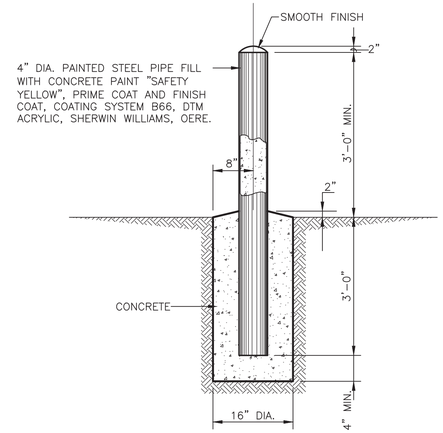

PIPE BOLLARD DETAIL

SCALE: NONE

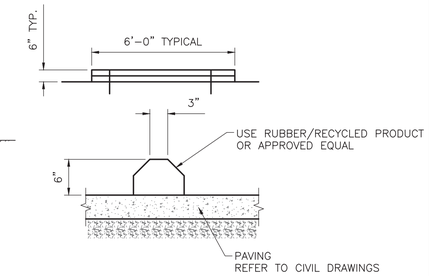

C C-103 DETAIL

SCALE: NONE

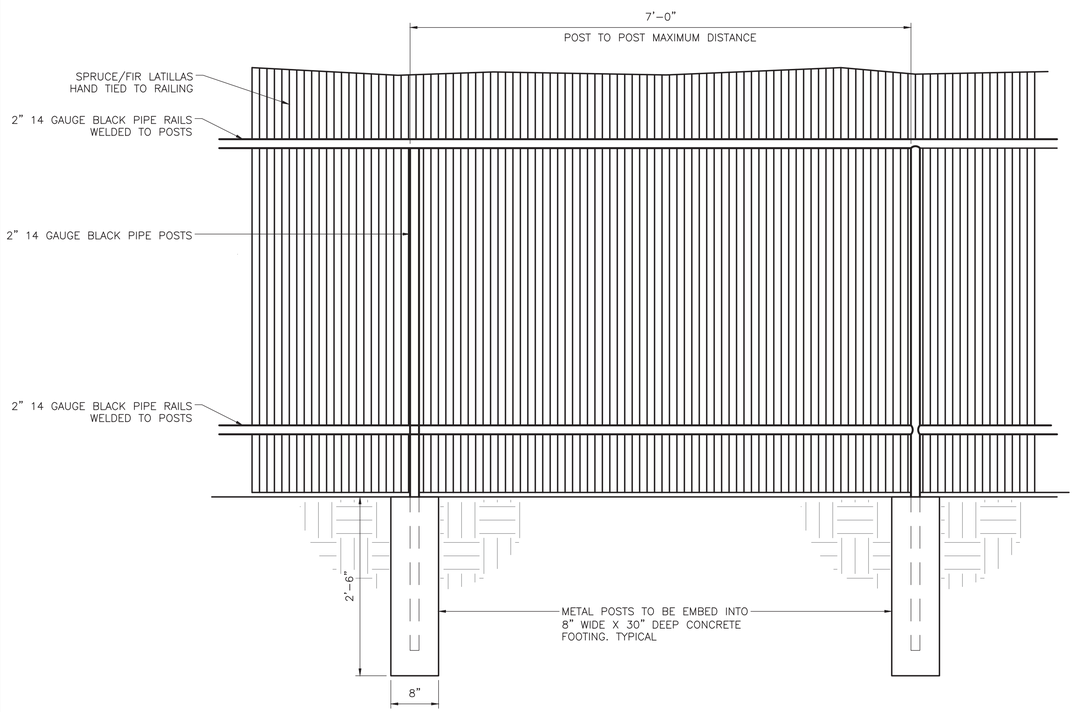

D C-103 DETAIL

SCALE: NONE

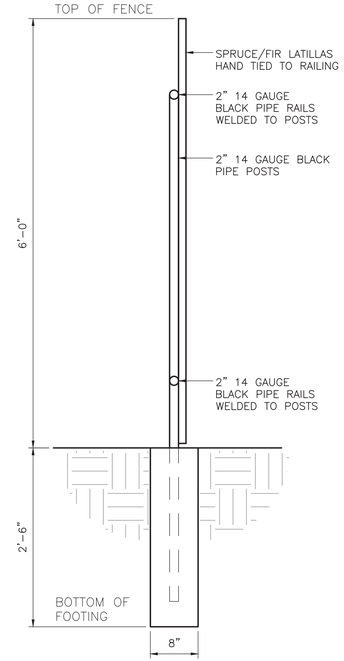

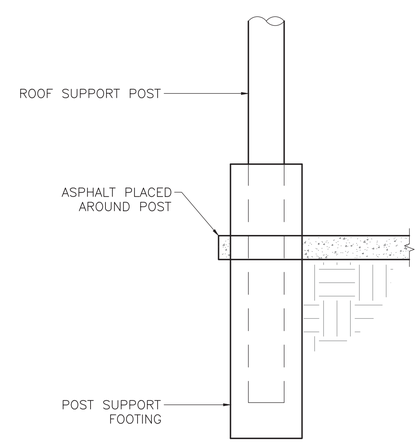

E C-103 DETAIL

SCALE: NONE

MOLZENCORBIN

2701 Miles Road SE
Albuquerque, New Mexico 87106
505 242 5700 office
505 242 0673 fax
MolzenCorbin.com

NUMERIC SCALE CONFIRMATION

DRAWINGS ARE DEPICTED AT INTENDED NUMERIC SCALES
IF THIS BAR EQUALS ONE INCH

STEVEN K. MORROW NEW MEXICO 13679 REGISTERED PROFESSIONAL ENGINEER 6-13-19

REV NO	REV DATE	DESCRIPTION

PROJECT NUMBER:	SFC182-11
DESIGNED BY:	SRL
DRAWN BY:	SRL
CHECKED BY:	SKM
PRIME DESIGN PROFESSIONAL:	JOHN Q. PATE
PROJECT DATE:	JUNE 2019

DETAILS

LA PUEBLA FIRE STATION ADDITION
SANTA FE COUNTY
LA PUEBLA, NEW MEXICO

C-501

SHEET

PLOT DATE: 6/13/2019 1:07 PM
SAVE DATE: 6/13/2019 11:41 AM
I:\SANTA FE COUNTY\SFC182-11 LA PUEBLA FIRE\DWGS\CLP-501

© COPYRIGHT

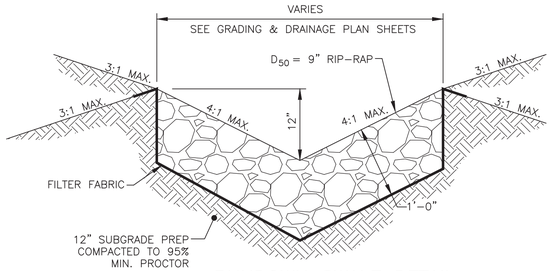

RUNDOWN SWALE DETAIL

SCALE: 1"=1'

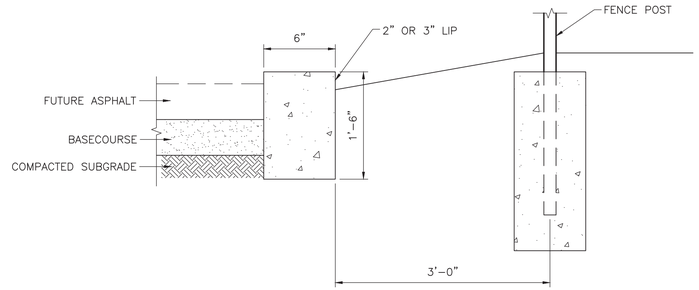

B / C-103 DETAIL

SCALE: NONE

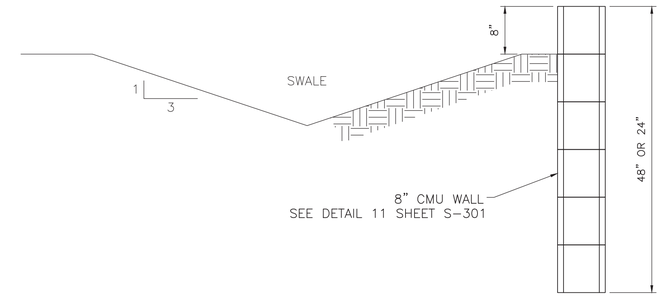

SITE RETAINING WALL DETAIL

SCALE: 1"=1'

NOTE:
FABRICATED FITTINGS ARE AVAILABLE IN TEES, WYES, REDUCERS, 45° BENDS.

WATERTIGHT (WT) JOINTS SHOWN. SOIL-TIGHT (ST) FITTINGS ARE ALSO AVAILABLE.

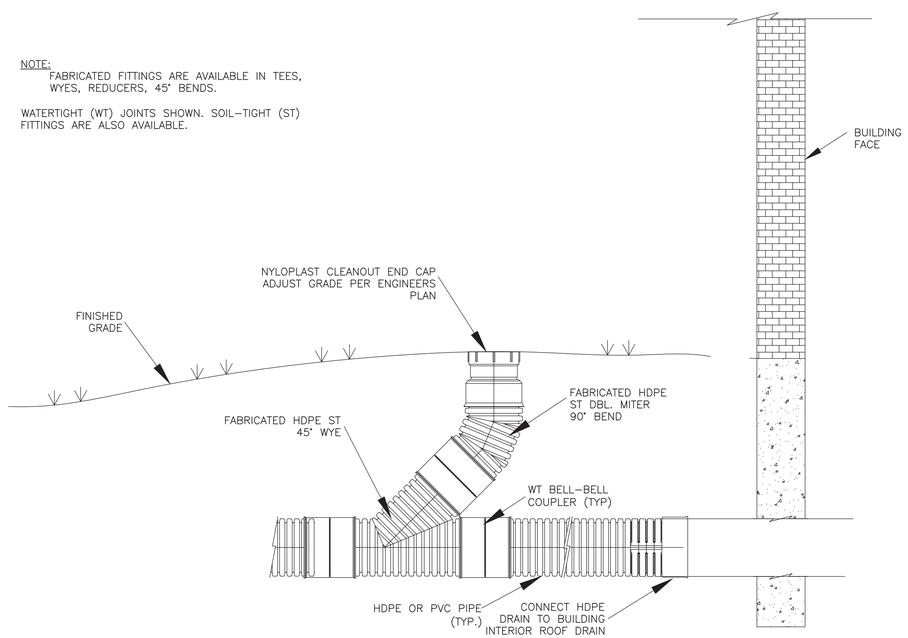

©2007 ADS, INC.

REV	DESCRIPTION	BY	REV DATE	CHK'D
REV.	DESCRIPTION	BY	MM/DD/YY	CHK'D

ADVANCED DRAINAGE SYSTEMS, INC. ("ADS") HAS PREPARED THIS DETAIL BASED ON INFORMATION PROVIDED TO ADS. THIS DRAWING IS INTENDED TO DEPICT THE COMPONENTS AS REQUESTED. ADS HAS NOT PERFORMED ANY ENGINEERING OR DESIGN SERVICES FOR THIS PROJECT, NOR HAS ADS INDEPENDENTLY VERIFIED THE INFORMATION SUPPLIED. THE INSTALLATION DETAILS PROVIDED HEREIN ARE GENERAL RECOMMENDATIONS AND ARE NOT SPECIFIC FOR THIS PROJECT. THE DESIGN ENGINEER SHALL REVIEW THESE DETAILS PRIOR TO CONSTRUCTION. IT IS THE DESIGN ENGINEERS RESPONSIBILITY TO ENSURE THE DETAILS PROVIDED HEREIN MEETS OR EXCEEDS THE APPLICABLE NATIONAL, STATE, OR LOCAL REQUIREMENTS AND TO ENSURE THAT THE DETAILS PROVIDED HEREIN ARE ACCEPTABLE FOR THIS PROJECT.

PROJECT LOCATION

DRAWING NUMBER: DRAWING#

ADS. ADVANCED DRAINAGE SYSTEMS, INC. 4640 TRUEMAN BLVD HILLIARD, OHIO 43026

DRAWN BY: ABC
DATE: DATE
DES BY: ENG
SCALE: NTS
SHEET: DF

OR APPROVED EQUAL

DOWNSPOUT ADAPTER DETAIL

SCALE: N.T.S.

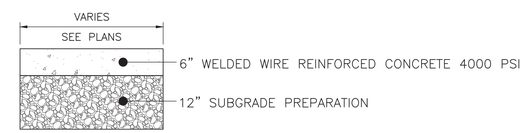

CONCRETE SLAB/PAVING DETAIL

SCALE: NONE

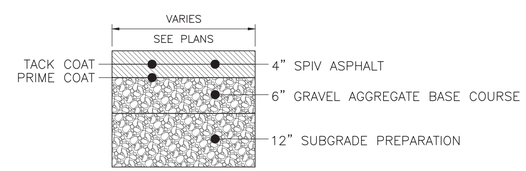

ASPAHLT/GRAVEL PAVING DETAIL

SCALE: NONE

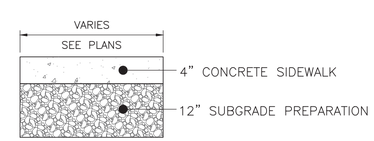

SIDEWALK DETAIL

SCALE: NONE

MOLZENCORBIN
2701 Miles Road SE
Albuquerque, New Mexico 87106
505 242 5700 office
505 242 0673 fax
MolzenCorbin.com

NUMERIC SCALE CONFIRMATION
DRAWINGS ARE DEPICTED AT INTENDED NUMERIC SCALES
IF THIS BAR EQUALS ONE INCH

STEVEN R. MORROW NEW MEXICO 13679 PROFESSIONAL ENGINEER
6-13-19

REV NO	REV DATE	DESCRIPTION

PROJECT NUMBER: SFC182-11
DESIGNED BY: SRL
DRAWN BY: SRL
CHECKED BY: SKM
PRIME DESIGN PROFESSIONAL: JOHN Q. PATE
PROJECT DATE: JUNE 2019

DETAILS

LA PUEBLA FIRE STATION ADDITION
SANTA FE COUNTY
LA PUEBLA, NEW MEXICO

C-502
SHEET

PLOT DATE: 6/13/2019 1:08 PM
SAVE DATE: 6/13/2019 11:41 AM
I:\SANTA FE COUNTY\SFC182-11 LA PUEBLA FIRE\DWGS\CLP-502

© COPYRIGHT

GENERAL CRITERIA

1. DESIGN LOADS SHALL BE CONFIGURED USING INTERNATIONAL BUILDING CODE (IBC) 2015 EDITION, AND ASCE 7-10 MINIMUM DESIGN LOADS FOR BUILDING AND OTHER STRUCTURES.
   A. SNOW LOAD DESIGN DATA
   GROUND SNOW LOAD 20 psf
   SNOW EXPOSURE FACTOR (Ce) 1.0
   SNOW IMPORTANCE FACTOR (Is) 1.1
   THERMAL FACTOR (Ct) 1.1
   B. WIND LOAD DATA
   BASIC WIND SPEED, V*ult* 110 MPH 3sec-gust
   WIND IMPORTANCE FACTOR 1.5
   WIND EXPOSURE C
   BUILDING CLASSIFICATION IV
   TOPOGRAPHIC FACTOR, Kzt 1.0
   WIND DESIGN PRESSURE, p h=17 Horz. (Z4)max =17 psf, Vert. (Z2)max= 24 psf

   C. EARTHQUAKE DESIGN DATA
   RISK CATEGORY IV
   IMPORTANCE FACTOR (Ie) 1.5
   Ss 0.517
   S1 0.152
   SITE CLASS D
   SDs 0.478
   SD1 0.223
   SEISMIC DESIGN CATEGORY D
   SEISMIC FORCE-RESISTING SYSTEM A13
   SEISMIC COEFFICIENT, CS 0.1216
   SEISMIC COEFFICIENT, R 6.5

   D. DESIGN LOADS FLOOR & ROOF
   ROOF
   DEAD LOAD 15 psf
   LIVE LOAD 20 psf (SNOW)
   FLOOR
   LIVE LOAD 40 psf (Office Space)
   LIVE LOAD 100 psf (Corridors)

2. CAST-IN-PLACE CONCRETE:
   A. F'c = 4000psi @ 28 DAYS (AIR ENTRAINED) - ALL EXTERIOR BUILDING
   B. F'c = 3000psi @ 28 DAYS (NONE AIR ENTRAINED) - ALL BUILDING

3. REINFORCING SHALL CONFORM TO THE REQUIREMENTS OF ASTM A615 OR A706, GRADE 60.

4. UNLESS NOTED OTHERWISE, LAP SPLICED OR EMBEDMENT LENGTHS SHALL CONFORM TO TABLE A, CLASS B SPLICE. SEE THIS SHEET, TABLE A.

5. UNLESS NOTED OTHERWISE, CONCRETE COVER OVER STEEL REINFORCEMENT SHALL CONFORM TO THE MINIMUMS REQUIRED BY CURRENT ADDITION OF ACI 318.

6. REINFORCEMENT DETAILING AND PLACEMENT SHALL CONFORM TO ACI 318 AND ACI 315, EXCEPT WHERE OTHERWISE INDICATED.

7. COVER: UNLESS OTHERWISE NOTED OR DETAILED, THE FOLLOWING MINIMUM CONCRETE COVER SHALL BE PROVIDED FOR REINFORCEMENT

EXPOSURE	MINIMUM COVER (IN.)
A. CONCRETE CAST AGAINST AND PERMANENTLY EXPOSED TO EARTH:	3
B. CONCRETE EXPOSED TO EARTH OR WEATHER:	
#6 - #18 BARS	2
#5 - AND SMALLER	1 1/2
C. CONCRETE NOT EXPOSED TO WEATHER OR NOT IN CONTACT WITH GROUND:	
SLABS, WALLS, JOISTS:	
#11 AND SMALLER	3/4
BEAMS, COLUMNS:	
TIES, STIRRUPS, PRIMARY REINFORCEMENT	1 1/2

FOUNDATION NOTES

1. DESIGN FOUNDATION BEARING PRESSURE (NET) 2000 PSF DEAD + LIVE LOAD. DESIGN PRESSURE MAY BE INCREASED BY 1/3 FOR COMBINED VERTICAL AND WIND/SEISMIC LOADS. SEE GEO-TECHNICAL REPORT BY GEO-TEST INC. JOB # 1-70510, DATED 6-19-07 AND ALSO SEE IBC. CONTRACTOR SHALL BE RESPONSIBLE TO REVIEW THE GEO-TECHNICAL REPORT AND SHALL FOLLOW THE RECOMMENDATIONS SPECIFIED THEREIN AND AS SHOWN IN DETAIL 8/S301.

2. REINFORCEMENT SHALL BE PLACED MID-DEPTH OF SLAB, U.N.O. CHAMFER EXPOSED EDGES OF CONCRETE 3/4", AT EXPOSED EDGES UNLESS OTHERWISE NOTED.

3. SUB-GRADE PREPARATION:
   A. EXISTING FOUNDATIONS AND UTILITIES AT ANY POINT BENEATH OR WITHIN 3'-0" OF THE NEW STRUCTURES SHALL BE REMOVED ENTIRELY. ANY FILL MATERIAL FROM PREVIOUS CONSTRUCTION ACTIVITIES WHICH IS ENCOUNTERED WITHIN THE BUILDING FOOTPRINT SHOULD ALSO BE REMOVED ENTIRELY. EXPOSED SUB-GRADE AT THE BASE OF REQUIRED EXCAVATION WHICH IS TO RECEIVE FILL SHALL BE COMPACTED TO NOT LESS THAN 90% MAXIMUM LAB DENSITY FOR COHESIVE MATERIAL, AND 95% MAXIMUM LAB DENSITY FOR COHESION-LESS MATERIAL, TO A MINIMUM DEPTH OF 8". SEE EXCAVATION/FILL DETAIL THIS SHEET.

4. FILL: ALL FILL PLACED UNDER BUILDING SLABS SHALL BE NON-EXPANSIVE AND SHALL BE COMPACTED TO NOT LESS THAN 95% MAXIMUM DENSITY ACCORDING TO ASTM D-1557. SEE GEO-TECHNICAL REPORT FOR COMPLETE INFORMATION.

MASONRY

1. UNLESS OTHERWISE NOTED, ALL CONCRETE MASONRY UNITS (CMU) SHALL BE 2-CELL BLOCK AND HAVE A 28 DAY MINIMUM COMPRESSIVE STRENGTH OF 1900 PSI ON NET AREA, AND MASONRY GROUT SHALL TYPE S WITH A COMPRESSIVE STRENGTH OF 1800 psi.

2. ALL MASONRY BOND BEAMS, LINTELS AND BLOCKS WITH EMBEDDED ANCHOR BOLTS SHALL BE FILLED WITH 2000 PSI GROUT.

3. LAP ALL MASONRY REINFORCING BARS 40 DIAMETERS OR 18" MINIMUM UNLESS OTHERWISE NOTED.

4. VERTICAL CELLS TO BE FILLED SHALL BE VERTICAL ALIGNMENT SUFFICIENT TO MAINTAIN A CLEAR UNOBSTRUCTED CONTINUOUS VERTICAL CELL NOT LESS THAN 2"x3" IN PLAN DIMENSIONS.

5. FOUNDATION DOWELS SHALL EXTEND A MINIMUM OF 40 DIAMETERS OR 24" MINIMUM INTO THE FOUNDATION CONCRETE AND 40 DIAMETERS INTO THE MASONRY WALL OR PARTITION. LAPS OR SPLICES OF REINFORCING STEEL IN MASONRY SHALL BE 2'-0" OR 40 DIAMETERS WHICHEVER IS GREATER. THERE SHALL BE A FOUNDATION DOWEL FOR EACH VERTICAL REINFORCING BAR.

6. VERTICAL WALL REINFORCING SHALL EXTEND CONTINUOUSLY FROM THE TOP OF FOUNDATION TO EMBED AT LEAST 6" INTO TOP OF WALL BOND BEAM.

7. AN ADDITIONAL VERTICAL BAR WITH FOUNDATION DOWEL, SAME SIZE AND LENGTH AS NORMAL REINFORCING BAR, SHALL BE PLACED.
   A. ON EACH SIDE OF CONTROL JOINTS.
   B. AT INTERSECTION OF EXTERIOR WALLS.

8. BOND BEAM REINFORCING STEEL FOR INTERIOR AND EXTERIOR WALLS SHALL BE CONTINUOUS THROUGHOUT.
   A. AT CONTROL JOINTS INTERMEDIATE BOND BEAM REINFORCEMENT SHALL BE CONTINUOUS. REINFORCEMENT IN BOND SEAMS AT FLOOR AND ROOF DIAPHRAGM LEVELS SHALL BE CONTINUOUS.
   B. AT ISOLATION JOINTS ALL BOND BEAM REINFORCING STEEL SHALL BE CONTINUOUS.

9. DETAILS OF MASONRY WALL CONTROL AND ISOLATION JOINTS ARE SHOWN ON STRUCTURAL DETAIL SHEETS. LOCATIONS OF MASON JOINTS WILL ALIGN WITH THE LOCATIONS OF EXTERIOR WALL FINISH CONTROL JOINTS AS SHOWN ON ARCHITECTURAL ELEVATION DRAWINGS.

10. BARS AROUND PERIMETER OF OPENINGS SHALL EXTEND NOT LESS THAN 40 BAR DIAMETERS OR 24", WHICHEVER IS LARGER, BEYOND CORNER OF OPENING. FOUNDATION DOWELS ARE ONLY REQUIRED WHEN BAR DEVELOPMENT LENGTH DOES NOT EXIST BELOW THE OPENING.

11. HORIZONTAL REINFORCING SHALL BE SPACED NO GREATER THAT 48" O.C. UNLESS NOTED OTHERWISE ON THE DRAWINGS.

12. A-BOLTS CAN NOT BE SUBSTITUTED FOR WITH EXPANSION ANCHORS.

STRUCTURAL STEEL

1. ALL STRUCTURAL STEEL MEMBERS SUCH AS COLUMNS, BEAMS, GIRTS AND BRACES SHALL BE PER SCHEDULE OF CONSTRUCTION MATERIALS THIS SHEET. MISCELLANEOUS STEEL ITEMS SHALL BE ASTM A36. MISCELLANEOUS STEEL TUBES SHALL BE ASTM A500, GRADE B.

2. ALL WELDING SHALL BE DONE IN ACCORDANCE WITH AWS CODE.

3. ALL BOLTS FOR BEAM CONNECTIONS SHALL BE ASTM A325 WITH A MINIMUM DIAMETER OF 3/4", UNLESS NOTED OTHERWISE. ALL BOLTED CONNECTIONS SHALL BE BEARING TYPE CONNECTIONS. WASHERS SHALL BE INSTALLED UNDER NUTS OF FASTENERS WHEN REQUIRED BY THE SPECIFICATION FOR JOINTS.

4. ALL FIELD WELDS SHALL BE INSPECTED PER SHEET S-002.

5. STEEL BEAMS SHALL BE CONCENTRIC WITH COLUMNS, UNLESS OTHERWISE NOTED.

6. ALL ANCHOR BOLTS SHALL BE ASTM A36 OR A307, UNLESS NOTED OTHERWISE.

7. NO OPENINGS SHALL BE CUT IN STRUCTURAL MEMBERS UNLESS SHOWN ON THE DRAWINGS.

8. BUILDING STEEL ROOF BEAMS AND SUPPORT POST ARE NON-SELF-SUPPORTING. THE ROOF METAL DECK, VERTICAL STEEL BRACING AND MASONRY WALLS ARE REQUIRED TO PROVIDE LATERAL STABILITY FOR THE STEEL BEAMS AND COLUMNS. CONTRACTOR SHALL PROVIDE ALL TEMPORARY BRACING REQUIRED TO MAINTAIN STABILITY OF THE POST AND BEAM SYSTEM UNTIL THESE BRACING ELEMENTS ARE IN PLACE.

SCHEDULE OF CONSTRUCTION MATERIALS

	LOCATION	28-DAY COMPRESSIVE STRENGTH
CONCRETE	EXTERIOR CONCRETE (EXPOSED TO FREEZING AND/OR DE-ICERS)	4,000 P.S.I. MIX TYPE D
	EXTERIOR CONCRETE (NOT EXPOSED TO FREEZING)	3,000 P.S.I. MIX TYPE A
	FOOTINGS	3,000 P.S.I. MIX TYPE A
	FOUNDATION WALLS	3,000 P.S.I. MIX TYPE D
	INTERIOR SLABS ON GRADE	3,000 P.S.I. MIX TYPE E
	NOTE: CONCRETE STRENGTH USED IN DESIGN IS 3,000 P.S.I.	
STRUCTURAL STEEL	APPLICATION	MATERIAL
	SQUARE OR RECTANGULAR HSS	ASTM A500 (46ksi) GRADE B
	WIDE FLANGES SECTIONS	ASTM A992 (50ksi)
	OTHER SHAPES AND PLATES	ASTM A36 (36ksi)
REINFORCING STEEL	BARS SHOWN ON DRAWING TO BE FIELD BENT	ALL OTHER BARS
	ASTM A615, GRADE 40 OR GRADE 60 (SEE LAP SPLICE SCHEDULE D/S003 FOR LAP LENGTHS	ASTM A615, GRADE 60 (SEE LAP SPLICE SCHEDULE D/S003 FOR LAP LENGTHS)

Type A - Water reducing admixture. This is used to reduce the quantity of mixing water at a given workability or increase workability at a given water content.
Type B - Retarding admixture used for increasing setting time of concrete.
Type C - Accelerating admixture used for decreasing setting time and to develop early strength gain.
Type D - Water reducing and retarding admixture has the effects of both A and B.
Type E - Water reducing and accelerating admixtures has the effects of both A and C.

WOOD DIMENSION LUMBER

APPLICATION	SPECIES AND MINIMUM GRADE			
TOP PLATES STRUTS ROOF JOISTS FLOOR JOISTS MISC. FRAMING HEADERS BEAMS LEDGERS	DOUGLAS FIR-LARCH HEM FIR SPRUCE-PINE-FIR MSR 1650F	#2 OR BETTER #2 OR BETTER #2 OR BETTER 1.5E OR BETTER		
BLOCKING	DOUGLAS FIR-LARCH HEM FIR SPRUCE-PINE-FIR MSR 1650F	#2 OR BETTER #2 OR BETTER #2 OR BETTER 1.5E OR BETTER		
POSTS AND TIMBERS 5"x5" AND LARGER	DOUGLAS FIR-LARCH SOUTHERN PINE	#2 OR BETTER #2 OR BETTER		
SILL PLATES	2x4's		2x6's OR GREATER	
	DOUGLAS FIR-LARCH HEM FIR SPRUCE-PINE-FIR SCL	STANDARD OR BETTER STANDARD OR BETTER STANDARD OR BETTER 1.3E	DOUGLAS FIR-LARCH HEM FIR SPRUCE-PINE-FIR SCL	#2 OR BETTER #2 OR BETTER #2 OR BETTER 1.5E
TRUSSED RAFTERS (CHORDS AND WEBS)	DOUGLAS FIR-LARCH HEM FIR SPRUCE-PINE-FIR MSR 1650F	#2 OR BETTER #2 OR BETTER #2 OR BETTER 1.5E OR BETTER		
EXTERIOR WALL STUDS & INTERIOR STRUCTURAL WALL STUDS	DOUGLAS FIR-LARCH HEM FIR SPRUCE-PINE-FIR	STUD GRADE OR BETTER. SEE NOTE 3 STUD GRADE OR BETTER. SEE NOTE 3 STUD GRADE OR BETTER. SEE NOTE 3		
INTERIOR NON-STRUCTURAL WALL STUDS	DOUGLAS FIR-LARCH HEM FIR SPRUCE-PINE-FIR	STANDARD, UTILITY, CONSTRUCTION OR BETTER. SEE NOTE 3 STANDARD, UTILITY, CONSTRUCTION OR BETTER. SEE NOTE 3 STANDARD, UTILITY, CONSTRUCTION OR BETTER. SEE NOTE 3		

APPLICATION			DESIGN VALUES (SEE NOTE 1) - P.S.I.					
			Fb	Fv	Fc ⊥	Fc ∥	E x 10 6	
STRUCTURAL COMPOSITE LUMBER (SCL)	1-1/2" x=< 5-1/2"		1700	285	680	1400	1.3	
	1-1/2" x ALL DEPTHS		2,250	285	750	2,175	1.5	
	1-3/4" x ALL DEPTHS		2,600	285	750	2,510	1.9	
	3-1/2" x ALL DEPTHS		1,700	285	680	1,400	1.3	
GLUED LAMINATED BEAMS				ALLOWABLE STRESSES - P.S.I.				
				Fb TENSION ZONE	Fb COMPRESSION ZONE STRESSED IN TENSION	Fv	Fc	E x 10 6
	ALL BEAMS	24F-V4 DF/DF OR 24F-V3 SP/SP (W/ STRESS CLASS) OR 24F-1.8E		2,400 (MIN.)	1450 (MIN.) SEE NOTE 2	265 (MIN.)	1,600 (MIN.)	1.8 (MIN.)

NOTES:
1. DESIGN VALUES ARE FOR NORMAL DURATION. REPETITIVE FRAMING FACTORS AND SIZE FACTORS HAVE NOT BEEN APPLIED.
2. 1850 FOR DF/DF COMBINATION AND 1950 FOR SP/SP COMBINATION.
3. FOR 2x6 AND LARGER, USE #2 GRADE OR BETTER FOR ANY OF THE THREE WOOD TYPES.

ABQ Engineering
Civil ▪Structural ▪Mechanical ▪Plumbing ▪Electrical
8102 Menaul Blvd. NE, Suite D, Albuquerque, NM 87110
tele: 505.255.7802 Proj. No.: 18-010 www.abqeng.com

MOLZENCORBIN
2701 Miles Road SE
Albuquerque, New Mexico 87106
505 242 5700 office
505 242 0673 fax
MolzenCorbin.com

NUMERIC SCALE CONFIRMATION
DRAWINGS ARE DEPICTED AT INTENDED NUMERIC SCALES
IF THIS BAR EQUALS ONE INCH

JOHN CRAIG HAGELGANS NEW MEXICO 15559 PROFESSIONAL ENGINEER
6/12/19

REV NO	REV DATE	DESCRIPTION

PROJECT NUMBER: SFC182-11
DESIGNED BY: JCH
DRAWN BY: DM
CHECKED BY: JCH
PRIME DESIGN PROFESSIONAL: JOHN PATE
PROJECT DATE: JUNE 2019

GENERAL STRUCTURAL NOTES

LA PUEBLA FIRE STATION ADDITION
SANTA FE COUNTY
LA PUEBLA, NEW MEXICO

S-001
SHEET 1 of 7

© COPYRIGHT

PLOT DATE: 6/13/2019 10:06 AM
SAVE DATE: 6/11/2019 10:01 AM
K:\PROJECTS\2018\18-010\STRUCTURAL\STRUCTURAL SET UPTS

DEFINITIONS

THE FOLLOWING DEFINITIONS COVER THE MEANINGS OF CERTAIN TERMS USED IN THESE NOTES:

'ARCHITECT/ENGINEER' - THE ARCHITECT OF RECORD AND THE STRUCTURAL ENGINEER OF RECORD.

- 'STRUCTURAL ENGINEER OF RECORD' (SER) - THE STRUCTURAL ENGINEER WHO IS LICENSED TO STAMP AND SIGN THE STRUCTURAL DOCUMENTS FOR THE PROJECT. THE SER IS RESPONSIBLE FOR THE DESIGN OF THE PRIMARY STRUCTURAL SYSTEM.
- 'SUBMIT FOR REVIEW' - SUBMIT TO THE ARCHITECT/ENGINEER FOR REVIEW PRIOR TO FABRICATION OR CONSTRUCTION.
- 'PER PLAN' - INDICATES REFERENCES TO THE STRUCTURAL PLANS, ELEVATIONS AND STRUCTURAL GENERAL NOTES.
- 'SPECIALTY STRUCTURAL ENGINEER' (SSE) - A PROFESSIONAL ENGINEER (PE OR SE), LICENSED IN THE STATE WHERE THE PROJECT IS LOCATED, (TYPICALLY NOT THE SER), WHO PERFORMS SPECIALTY STRUCTURAL ENGINEERING SERVICES FOR SELECTED SPECIALTY-ENGINEERED ELEMENTS IDENTIFIED IN THE CONTRACT DOCUMENTS, AND WHO HAS EXPERIENCE AND TRAINING IN THE SPECIALTY. DOCUMENTS STAMPED AND SIGNED BY THE SSE SHALL BE COMPLETED BY OR UNDER THE DIRECT SUPERVISION OF THE SSE.
- 'BIDDER-DESIGNED' - COMPONENTS OF THE STRUCTURE THAT REQUIRE THE GENERAL CONTRACTOR, SUBCONTRACTOR, OR SUPPLIER WHO IS RESPONSIBLE FOR THE DESIGN, FABRICATION AND INSTALLATION OF SPECIALTY-ENGINEERED ELEMENTS IDENTIFIED IN THE CONTRACT DOCUMENTS TO RE-RETAIN THE SERVICES OF AN SSE. SUBMITTALS OF 'BIDDER-DESIGNED' ELEMENTS SHALL BE STAMPED AND SIGNED BY THE SSE.

OTHER DRAWINGS: REFER TO THE ARCHITECTURAL, MECHANICAL, ELECTRICAL, CIVIL AND PLUMBING DRAWINGS FOR ADDITIONAL INFORMATION INCLUDING BUT NOT LIMITED TO: DIMENSIONS, ELEVATIONS, SLOPES, DOOR AND WINDOW OPENINGS, NON-BEARING WALLS, STAIRS, FINISHES, DRAINS, WATERPROOFING, RAILINGS, MECHANICAL UNIT LOCATIONS, AND OTHER NON-STRUCTURAL ITEMS.

STRUCTURAL DETAILS: THE STRUCTURAL DRAWINGS ARE INTENDED TO SHOW THE GENERAL CHARACTER AND EXTENT OF THE PROJECT AND ARE NOT INTENDED TO SHOW ALL DETAILS OF THE WORK.

STRUCTURAL RESPONSIBILITIES: THE STRUCTURAL ENGINEER (SER) IS RESPONSIBLE FOR THE STRENGTH AND STABILITY OF THE PRIMARY STRUCTURE IN ITS COMPLETED FORM.

COORDINATION: THE CONTRACTOR IS RESPONSIBLE FOR COORDINATING DETAILS AND ACCURACY OF THE WORK; FOR CONFIRMING AND CORRELATING ALL QUANTITIES AND DIMENSIONS; FOR SELECTING FABRICATION PROCESSES; FOR TECHNIQUES OF ASSEMBLY; AND FOR PERFORMING WORK IN A SAFE AND SECURE MANNER.

MEANS, METHODS AND SAFETY REQUIREMENTS: THE CONTRACTOR IS RESPONSIBLE FOR THE MEANS AND METHODS OF CONSTRUCTION AND ALL JOB RELATED SAFETY STANDARDS SUCH AS OSHA AND DOSH (DEPARTMENT OF OCCUPATIONAL SAFETY AND HEALTH).

BRACING/SHORING DESIGN ENGINEER: THE CONTRACTOR SHALL, AT HIS DISCRETION EMPLOY AN SSE, A REGISTERED PROFESSIONAL ENGINEER FOR THE DESIGN OF ANY TEMPORARY BRACING AND SHORING.

TEMPORARY SHORING, BRACING: THE CONTRACTOR IS RESPONSIBLE FOR THE STRENGTH AND STABILITY OF THE STRUCTURE DURING CONSTRUCTION AND SHALL PROVIDE TEMPORARY SHORING, BRACING AND OTHER ELEMENTS REQUIRED TO MAINTAIN STABILITY UNTIL THE STRUCTURE IS COMPLETE. IT IS THE CONTRACTOR'S RESPONSIBILITY TO BE FAMILIAR WITH THE WORK REQUIRED IN THE CONSTRUCTION DOCUMENTS AND THE REQUIREMENTS FOR EXECUTING IT PROPERLY.

CONSTRUCTION LOADS: LOADS ON THE STRUCTURE DURING CONSTRUCTION SHALL NOT EXCEED THE DESIGN LOADS AS NOTED IN DESIGN CRITERIA & LOADS BELOW OR THE CAPACITY OF PARTIALLY COMPLETED CONSTRUCTION AS DETERMINED BY THE CONTRACTOR'S SSE FOR BRACING/SHORING.

CHANGES IN LOADING: THE CONTRACTOR HAS THE RESPONSIBILITY TO NOTIFY THE SER OF ANY ARCHITECTURAL, MECHANICAL, ELECTRICAL, OR PLUMBING LOAD IMPOSED ONTO THE STRUCTURE THAT DIFFERS FROM, OR THAT IS NOT DOCUMENTED ON THE ORIGINAL CONTRACT DOCUMENTS (ARCHITECTURAL / STRUCTURAL / MECHANICAL / ELECTRICAL OR PLUMBING DRAWINGS). PROVIDE DOCUMENTATION OF LOCATION, LOAD, SIZE AND ANCHORAGE OF ALL UNDOCUMENTED LOADS IN EXCESS OF 400 POUNDS. PROVIDE MARKED-UP STRUCTURAL PLAN INDICATING LOCATIONS OF ANY NEW EQUIPMENT OR LOADS. SUBMIT PLANS TO THE ARCHITECT/ENGINEER FOR REVIEW PRIOR TO INSTALLATION.

NOTE PRIORITIES: PLAN AND DETAIL NOTES AND SPECIFIC LOADING DATA PROVIDED ON INDIVIDUAL PLANS AND DETAIL DRAWINGS SUPPLEMENTS INFORMATION IN THE STRUCTURAL GENERAL NOTES.

DISCREPANCIES: IN CASE OF DISCREPANCIES BETWEEN THE GENERAL NOTES, SPECIFICATIONS, PLAN/DETAILS OR REFERENCE STANDARDS, THE ARCHITECT/ENGINEER SHALL DETERMINE WHICH SHALL GOVERN. DISCREPANCIES SHALL BE BROUGHT TO THE ATTENTION OF THE ARCHITECT/ENGINEER BEFORE PROCEEDING WITH THE WORK. SHOULD ANY DISCREPANCY BE FOUND IN THE CONTRACT DOCUMENTS, THE CONTRACTOR WILL BE DEEMED TO HAVE INCLUDED IN THE PRICE THE MOST EXPENSIVE WAY OF COMPLETING THE WORK, UNLESS PRIOR TO THE SUBMISSION OF THE PRICE, THE CONTRACTOR ASKS FOR A DECISION FROM THE ARCHITECT AS TO WHICH SHALL GOVERN. ACCORDINGLY, ANY CONFLICT IN OR BETWEEN THE CONTRACT DOCUMENTS SHALL NOT BE A BASIS FOR ADJUSTMENT IN THE CONTRACT PRICE.

SITE VERIFICATION: THE CONTRACTOR SHALL VERIFY ALL DIMENSIONS AND CONDITIONS AT THE SITE. CONFLICTS BETWEEN THE DRAWINGS AND ACTUAL SITE CONDITIONS SHALL BE BROUGHT TO THE ATTENTION OF THE ARCHITECT/ENGINEER BEFORE PROCEEDING WITH THE WORK.

ADJACENT UTILITIES: THE CONTRACTOR SHALL DETERMINE THE LOCATION OF ALL ADJACENT UNDERGROUND UTILITIES PRIOR TO EARTHWORK, FOUNDATIONS, SHORING, AND EXCAVATION. ANY UTILITY INFORMATION SHOWN ON THE DRAWINGS AND DETAILS IS APPROXIMATE AND NOT NECESSARILY COMPLETE.

ALTERNATES: ALTERNATE PRODUCTS OF SIMILAR STRENGTH, NATURE, AND FORM FOR SPECIFIED ITEMS MAY BE SUBMITTED WITH ADEQUATE TECHNICAL DOCUMENTATION TO THE ARCHITECT/ENGINEER FOR REVIEW. ALTERNATE MATERIALS THAT ARE SUBMITTED WITHOUT ADEQUATE TECHNICAL DOCUMENTATION OR THAT SIGNIFICANTLY DEVIATE FROM THE DESIGN INTENT OF MATERIALS SPECIFIED MAY BE RETURNED WITHOUT REVIEW. ALTERNATES THAT REQUIRE SUBSTANTIAL EFFORT TO REVIEW WILL NOT BE REVIEWED UNLESS AUTHORIZED BY THE OWNER.

SUBMITTALS

SUBMIT FOR REVIEW: SUBMITTALS OF SHOP DRAWINGS, AND PRODUCT DATA ARE REQUIRED FOR ITEMS NOTED IN THE INDIVIDUAL MATERIALS SECTIONS AND FOR BIDDER DESIGNED ELEMENTS.

SUBMITTAL REVIEW PERIOD: SUBMITTALS SHALL BE MADE IN TIME TO PROVIDE A MINIMUM OF TWO WEEKS FOR REVIEW BY THE ARCHTECT/ENGINEER PRIOR TO THE ONSET OF FABRICATION.

GENERAL CONTRACTOR'S PRIOR REVIEW: PRIOR TO SUBMISSION TO THE ARCHITECT/ENGINEER, THE CONTRACTOR SHALL REVIEW THE SUBMITTAL FOR COMPLETENESS. DIMENSIONS AND QUANTITIES ARE NOT REVIEWED BY THE 'SER', AND THEREFOR, MUST BE VERIFIED BY THE GENERAL CONTRACTOR. CONTRACTOR SHALL PROVIDE ANY NECESSARY DIMENSIONAL DETAILS REQUESTED BY THE DETAILER AND PROVIDE THE CONTRACTOR'S REVIEW STAMP AND SIGNATURE BEFORE FORWARDING TO THE ARCHITECT/ENGINEER.

SHOP DRAWING REVIEW: ONCE THE CONTRACTOR HAS COMPLETED THE REQUIRED PRIOR REVIEW, THE 'SER' WILL REVIEW THE SUBMITTAL FOR GENERAL CONFORMANCE WITH THE DESIGN INTENT AND THE CONTRACT DOCUMENTS OF THE BUILDING AND WILL STAMP THE SUBMITTAL ACCORDINGLY. MARKINGS OR COMMENTS SHALL NOT BE CONSTRUED AS RELIEVING THE CONTRACTOR FROM COMPLIANCE WITH THE PROJECT PLANS AND SPECIFICATIONS, NOR THE DEPARTURES THERE FROM.

SHOP DRAWING DEVIATIONS: WHEN SHOP DRAWINGS (COMPONENT DESIGN DRAWINGS) DIFFER FROM OR ADD TO THE REQUIREMENTS OF THE STRUCTURAL DRAWINGS THEY SHALL BE DESIGNED AND STAMPED BY THE RESPONSIBLE 'SSE'.

DEFERRED SUBMITTALS

BIDDER-DESIGNED ELEMENTS
SUBMIT "BIDDER-DESIGNED" DEFERRED SUBMITTALS TO THE ARCHITECT AND 'SER' FOR REVIEW PRIOR TO SUBMISSION TO THE APPROVING AGENCY.

DESIGN OF PREFABRICATED, "BIDDER-DESIGNED", MANUFACTURED, PRE-ENGINEERED, OR OTHER FABRICATED PRODUCTS SHALL COMPLY WITH THE FOLLOWING REQUIREMENTS:

1. DESIGN CONSIDERS TRIBUTARY DEAD, LIVE, WIND AND EARTHQUAKE LOADS IN COMBINATIONS REQUIRED BY IBC.
2. DESIGN WITHIN THE DEFLECTION LIMITS NOTED HEREIN AND AS SPECIFIED OR REFERENCED IN THE IBC.
3. DESIGN SHALL CONFORM TO THE SPECIFICATIONS AND REFERENCE STANDARDS OF THE GOVERNING CODE.
4. SUBMITTAL SHALL INCLUDE:
   a. CALCULATIONS PREPARED, STAMPED AND SIGNED BY THE 'SSE' DEMONSTRATING CODE CONFORMANCE.
   b. ENGINEERED COMPONENT DESIGN DRAWINGS ARE PREPARED, STAMPED AND SIGNED BY THE 'SSE'.
   c. PRODUCT DATA, TECHNICAL INFORMATION AND MANUFACTURER'S WRITTEN REQUIREMENTS AND AGENCY APPROVALS AS APPLICABLE.
   d. 'SSE' MAY SUBMIT TO THE ARCHITECT/ENGINEER, A REQUEST TO UTILIZE RELEVANT ALTERNATE DESIGN CRITERIA OF SIMILAR NATURE AND GENERALLY EQUIVALENCY WHICH IS RECOGNIZED BY THE CODE AND ACCEPTABLE TO THE AUTHORITY HAVING JURISDICTION. SUBMIT ADEQUATE DOCUMENTATION OF DESIGN.

DEFLECTION LIMITS:	VERTICAL	LIMIT
	ROOF MEMBERS, DEAD + LIVE OR SNOW OR WIND, TOTAL LOAD (TL) DEFLECTION	L / 240, WHERE (L IS SPAN LENGTH, INCHES)
	ROOF, LIVE OR SNOW OR WIND LOAD (RLL)	L / 360
	FLOOR MEMBERS, TOTAL LOAD (TL) uno	L / 240
	FLOOR LIVE LOAD (LL) uno	L / 360
	HORIZONTAL	LIMIT AND FOOTNOTE
	MEMBERS SUPPORTING BRITTLE FINISHES	L / 240 (1)
	MEMBERS SUPPORTING FLEXIBLE FINISHES	L / 180 (1)

(1) WIND LOAD IS REDUCIBLE TO 0.6 TIMES THE COMPONENT AND CLADDING LOADS PER TABLE 1604.3 FOOTNOTE f.

GENERAL CONTRACTOR'S PRIOR REVIEW: ONCE THE CONTRACTOR HAS COMPLETED THE REVIEW OF THE 'SSE' COMPONENT DRAWINGS, THE 'SER' WILL REVIEW THE SUBMITTAL FOR GENERAL CONFORMANCE WITH THE DESIGN OF THE BUILDING AND WILL STAMP THE SUBMITTAL ACCORDINGLY. REVIEW OF THE SPECIALTY STRUCTURAL ENGINEER'S 'SSE' SHOP DRAWINGS (COMPONENT DESIGN DRAWINGS) IS FOR COMPLIANCE WITH DESIGN CRITERIA AND COMPATIBILITY WITH THE DESIGN OF THE PRIMARY STRUCTURE AND DOES NOT RELIEVE THE 'SSE' OF RESPONSIBILITY FOR THAT DESIGN. ALL NECESSARY BRACING, TIES, ANCHORAGE, PROPRIETARY PRODUCTS SHALL BE FURNISHED AND INSTALLED PER MANUFACTURER'S INSTRUCTIONS OR THE 'SSE'S' DESIGN DRAWINGS AND CALCULATIONS. THESE ELEMENTS INCLUDE BUT ARE NOT LIMITED TO THE FOLLOWING:

"BIDDER-DESIGNED" DEFERRED SUBMITTALS

- TEMPORARY SHORING SYSTEMS

QUALITY ASSURANCE (TESTING AND INSPECTION)

QUALITY ASSURANCE (TESTING AND INSPECTION) AS REQUIRED BY THE OWNER AND SECTIONS 1704 THRU 1709 OF THE IBC, SHALL BE PROVIDED BY A QUALIFIED AGENCY SELECTED BY THE OWNER. THE CONTRACTOR SHALL COORDINATE AND COOPERATE WITH THE REQUIRED INSPECTIONS. ALL TESTING AND INSPECTION REPORTS SHALL BE SENT WITHIN 24 HOURS OF THE TEST OR INSPECTION TO THE OWNER, ARCHITECT, APPLICABLE ENGINEER, BUILDING OFFICIAL AND GENERAL CONTRACTOR. ITEMS REQUIRING QUALITY ASSURANCE (TESTING AND INSPECTION) ARE:

1. SOILS/ENGINEERED FILL (IBC SECTION 1705.6 AND TABLE 1705.6):
   A. REFER TO SPECIFICATION SECTION 01 4523 FOR ADDITIONAL AND SPECIFIC TESTING AND INSPECTION REQUIREMENTS.
   B. PRIOR TO PLACEMENT OF THE PREPARED FILL, THE INSPECTOR SHALL DETERMINE THAT THE SITE HAS BEEN PREPARED IN ACCORDANCE WITH THE SOILS REPORT.
   C. DURING PLACEMENT AND COMPACTION OF THE FILL MATERIAL, THE INSPECTOR SHALL DETERMINE THAT THE MATERIAL BEING USED AND THE MAXIMUM LIFT THICKNESS COMPLIES WITH THE GEO-TECHNICAL'S REPORT.
   D. THE INSPECTOR SHALL DETERMINE THAT THE IN-PLACE DRY DENSITY OF THE ENGINEERED FILL MATERIAL COMPLIES WITH THE GEO-TECHNICAL REPORT.
      1. CONTINUOUS FOOTING ENGINEERED FILL: SEE SPECIFICATIONS.
      2. SPOT FOOTING ENGINEERED FILL: SEE SPECIFICATIONS.
      3. SITE WORK ENGINEERED FILL (PAVED AREAS, SIDEWALKS, TRENCHES, ETC.): SEE SPECIFICATIONS.
      4. BUILDING PAD ENGINEERED FILL: SEE SPECIFICATIONS.

2. CONCRETE (IBC SECTION 1705.3 AND TABLE 1705.3):
   A. REFER TO SPECIFICATION SECTION 01 4523 FOR ADDITIONAL AND SPECIFIC TESTING AND INSPECTION REQUIREMENTS.
   B. CYLINDERS, SLUMP, TEMPERATURE AND AIR-ENTRAINMENT SHALL BE DONE. PROVIDE SIX SAMPLES EACH FOR EXTERIOR SITE WORK CONCRETE, FOOTINGS, FOUNDATION WALLS AND INTERIOR SLABS ON GRADE.
   C. PROTECTION OF CONCRETE DURING COLD AND HOT WEATHER.

3. PREFABRICATED METAL PLATE WOOD TRUSSES (IBC SECTIONS 1705.5)
   A. REFER TO SPECIFICATION SECTION 06 1753 SHOP-FABRICATED WOOD TRUSSES: TRUSSED RAFTERS FOR CERTIFICATION REQUIREMENTS.
   B. THE INSPECTOR SHALL VERIFY THAT THE FABRICATOR MAINTAINS DETAILED FABRICATION AND QUALITY CONTROL PROCEDURES THAT PROVIDE A BASIS OF INSPECTION CONTROL OF THE WORKMANSHIP AND THE FABRICATORS ABILITY TO CONFORM TO APPROVED CONSTRUCTION DOCUMENTS AND REFERENCED STANDARDS.

4. WOOD DIAPHRAGMS AND SHEAR WALLS (IBC SECTION 1705.5)
   A. FOR WALLS AND ROOF AREAS WHERE THE NAIL SPACING IS 4 INCHES AND LESS ON CENTER, THE INSPECTOR SHALL VERIFY WOOD PANEL SHEATHING GRADE, THICKNESS AND NOMINAL SIZE OF FRAMING MEMBERS, ADJOINING PANEL EDGES, NAIL SIZE AND SPACING, BOLTING AND OTHER FASTENING OF COMPONENTS.

5. EPOXY ANCHORS (IBC SECTION 1706.1):
   A. REFER TO SPECIFICATION SECTION 01 4523 FOR ADDITIONAL AND SPECIFIC TESTING AND INSPECTION REQUIREMENTS.
   B. INSPECTION SHALL VERIFY ALL DRILLED HOLES SIZE AND DEPTH PRIOR TO INSTALLATION OF EPOXY AND ANCHOR ROD. SEE SPECIFICATIONS FOR QUANTITY OF TESTING.

6. STEEL (IBC SECTION 1705.2):
   A. INSPECTION DURING FABRICATION IS NOT REQUIRED IF THE FABRICATOR IS REGISTERED AND APPROVED TO PERFORM SUCH WORK WITHOUT INSPECTION. SPECIAL INSPECTION OF FIELD WELDS AS REQUIRED BY IBC SECTION 1704 .

7. MASONRY (IBC SECTION 1705.4):
   A. REFER TO SPECIFICATION SECTION 04 0000 FOR ADDITIONAL AND SPECIFIC TESTING AND INSPECTION REQUIREMENTS.
   B. SPECIAL INSPECTION OF MASONRY IS NOT REQUIRED.

MOLZENCORBIN
2701 Miles Road SE
Albuquerque, New Mexico 87106
505 242 5700 office
505 242 0673 fax
MolzenCorbin.com

NUMERIC SCALE CONFIRMATION
DRAWINGS ARE DEPICTED AT INTENDED NUMERIC SCALES
IF THIS BAR EQUALS ONE INCH

NEW MEXICO PROFESSIONAL ENGINEER JOHN CRAIG HAGELGANZ 15559
6/12/19

REV NO	REV DATE	DESCRIPTION

PROJECT NUMBER: SFC182-11
DESIGNED BY: JCH
DRAWN BY: DM
CHECKED BY: JCH
PRIME DESIGN PROFESSIONAL: JOHN PATE
PROJECT DATE: JUNE 2019

GENERAL STRUCTURAL NOTES

LA PUEBLA FIRE STATION ADDITION
SANTA FE COUNTY
LA PUEBLA, NEW MEXICO

ABQ Engineering
Civil ▪Structural ▪Mechanical ▪Plumbing ▪Electrical
8102 Menaul Blvd. NE, Suite D, Albuquerque, NM 87110
tele: 505.255.7802 Proj. No.: 18-010 www.abqeng.com

S-002
SHEET 2 of 7

© COPYRIGHT

PLOT DATE: 6/12/2019 10:06 AM
SAVE DATE: 6/11/2019 10:01 AM
K:\PROJECTS\2018\18-010\STRUCTURAL\STRUCTURAL SET LPFS

TABLE A - REINFORCEMENT TENSION LAPS, EMBEDMENT AND HOOK LENGTHS (1)

fy = 60000 psi f'c = 3000 psi (2) (3)

BAR SIZE (d)	CLEAR SPACING (IN) (4)			EMBEDMENT AND CLASS A LAP (IN) (5)(6)(7)						CLASS B LAP (IN) (6)(8)						HOOK (IN) (9)
				TOP BAR (10)			OTHER BARS			TOP BAR (10)			OTHER BARS			
	2d	3d	5d	2d<S<3d	S≥3d (11)	S≥5D (12)	2d<S<3d	S≥3d (11)	S≥5D (12)	2d<S<3d	S≥3d (11)	S≥5D (12)	2d<S<3d	S≥3d (11)	S≥5D (12)	
3	3/4	1 1/8	1 7/8	16	16	16	13	13	13	21	21	21	16	16	16	9
4	1	1 1/2	2 1/2	22	22	22	17	17	17	28	28	28	22	22	22	11
5	1 1/4	1 7/8	3 1/8	27	27	27	21	21	21	35	35	35	27	27	27	14
6	1 1/2	2 1/4	3 3/4	35	32	32	27	25	25	46	42	42	35	32	32	17
7	1 3/4	2 5/8	4 3/8	48	38	38	37	29	29	63	49	49	48	38	38	20
8	2	3	5	63	45	43	49	35	33	82	59	56	63	45	43	22
9	2.256	3 3/8	5 5/8	80	57	48	62	44	37	104	74	63	80	57	48	25
10	2.54	3.81	6.35	102	73	58	78	56	45	132	94	76	102	73	58	28
11	2.82	4.23	7.05	125	89	71	96	69	55	162	116	93	125	89	71	31

NOTES FOR TABLE A

1. LENGTHS SHOWN CONFORM WITH NON SEISMIC PROVISIONS OF ACI 318 FOR UNCOATED BARS NOT ENCLOSED BY CLOSELY SPACED SPIRALS OR TIES. DEVELOPMENT OF REINFORCEMENT NOT COVERED BY THE TABLE SHALL CONFORM WITH ACI 318.
2. MULTIPLY LENGTHS SHOWN BY 0.87 FOR 4000 PSI. CONCRETE, BUT LENGTH OF LAP SHALL NOT BE LESS THAN 12 INCH.
3. MULTIPLY LENGTHS SHOWN BY 1.3 FOR LIGHTWEIGHT AGGREGATE CONCRETE.
4. BAR CLEAR SPACING IS THE CENTER TO CENTER BAR SPACING MINUS TWO BAR DIAMETERS WHEN ALL BARS ARE LAPPED AT THE SAME LOCATION. WHEN BAR LAPS ARE STAGGERED, AND LAP HALF THE BARS ARE LAPPED AT THE SAME LOCATION, THE BAR CLEAR SPACING IS TWICE THE CENTER TO CENTER BAR SPACING MINUS TWO BAR DIAMETERS. WHEN ALL BARS ARE EMBEDDED AT THE SAME LOCATION, THE BAR CLEAR SPACING IS THE CENTER TO CENTER BAR SPACING MINUS ONE BAR DIAMETER.
5. CLASS A LAP LENGTHS APPLY ONLY WHERE NOTED ON THE DRAWINGS.
6. LAP AND EMBEDMENT LENGTHS SHOWN APPLY WHEN MINIMUM CONCRETE COVER OVER BARS CONFORMS WITH VALUES GIVEN IN THE TABLE FOR "CONCRETE COVER". THESE COVER VALUES CONFIRM WITH ACI 318.
7. CLASS A LAP AND EMBEDMENT LENGTH HAVE SAME VALUE.
8. CLASS B LAP LENGTHS APPLY FOR ALL SPLICES UNLESS NOTED OTHERWISE.
9. HOOK LENGTH GIVEN IS THE STRAIGHT LINE DISTANCE FROM THE LOCATION OF MAXIMUM STRESS IN THE BAR TO THE OUTSIDE END OF THE HOOK. MULTIPLY LENGTHS GIVEN BY 0.7 FOR HOOKS WITH SIDE COVER NORMAL TO THE HOOK NOT LESS THAN 2-1/2 INCH AND FOR 90 DEGREE HOOKS COVER ON BAR EXTENSION BEYOND HOOK NOT LESS THAN 2 INCH.
10. TOP BARS ARE HORIZONTAL REINFORCEMENT PLACED SO THAT MORE THAN 12 INCHES OF CONCRETE IS CAST BELOW THE REINFORCEMENT.
11. MULTIPLY LAP AND EMBEDMENT LENGTHS GIVEN BY 2.0 FOR BARS WITH CLEAR SPACING OF TWO BAR DIAMETERS OR LESS OR CONCRETE COVER OF ONE BAR DIAMETER OR LESS.
12. MINIMUM CONCRETE COVER FROM FACE OF MEMBER TO EDGE BAR SHALL NOT BE LESS THAN TWO AND ONE HALF BAR DIAMETERS.

(1) REBAR TYPICAL LAPS & NOTES

Scale: N.T.S.

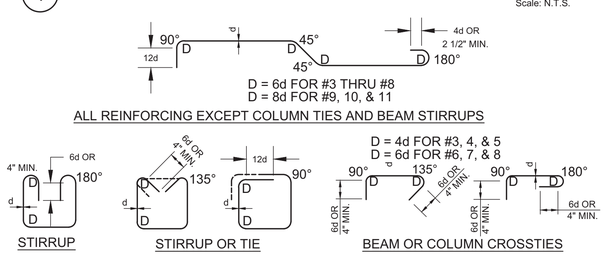

(2) REBAR TYPICAL BEND DETAILS

Scale: N.T.S.

TYPICAL ANCHOR BOLT SCHEDULE

INSTALLATION TYPE	CAST-IN-PLACE (PRE AUTHORIZED) [2]				DRILL-IN-OPTIONS (SUBMITTAL REQUIRED) [3]
BOLT TYPE	STANDARD J-BOLT	HEADED ANCHOR	THREADED ROD ANCHOR	SIMPSON "SSTB" ANCHOR BOLT	ADHESIVE ANCHOR
EMBEDMENT REQUIREMENTS (PROJECTION NOTE (1); MIN. EMBED UNO PER PLAN)	7 1/2"	12x DIA.; 1/4" MIN.	TACK	PER MFR	[4]; NOT ALLOWED AT P-T SLAB
LIMITS	3/4"Ø MAX	5/8"Ø THRU 2 1/2"Ø		FOR WOOD FRAME ONLY	5/8"Ø THRU 1"Ø
ANCHOR BOLT MATERIAL - A325 OR F1554 GRADE 36 MIN.					
DIA = ANCHOR BOLT DIAMETER (NOMINAL)					

(3) ANCHOR DETAILS

Scale: N.T.S.

NOTES:

1. CONTRACTOR SHALL DETERMINE THE REQUIRED THREAD PROJECTION SUITABLE FOR THE THICKNESS OF MATERIAL BEING FASTENED PLUS GROUT ALLOWANCE, IF ANY, AND CONSTRUCTION TOLERANCES, UNO.
2. CONTRACTOR MAY SELECT APPROPRIATE CAST-IN-PLACE ANCHOR BOLT OPTION WITHOUT SUBMITTAL.
3. DRILL-IN OPTIONS ARE NOT APPROPRIATE AT ALL CONDITIONS. IF DRILL-IN METHOD IS PREFERRED, SUBMIT MANUFACTURER'S INFORMATION, ALLOWABLE LOAD VS. EMBEDMENT DATA AND LOCATIONS OF WHERE SUBSTITUTIONS ARE REQUESTED. ENGINEER WILL DETERMINE IF SUBSTITUTION IS APPROPRIATE FOR LOCATION AND LOADING.
4. EMBEDMENT OF DRILL-IN ANCHORS SHALL BE PER ENGINEER'S SUBMITTAL REVIEW COMMENTS. EMBEDMENT SHALL BE (9) NINE TIMES THE NOMINAL ANCHOR DIAMETER, UNO.
5. AT PRESSURE TREATED SILLS, PROVIDE HOT DIPPED GALVANIZED OR STAINLESS STEEL ANCHORS.

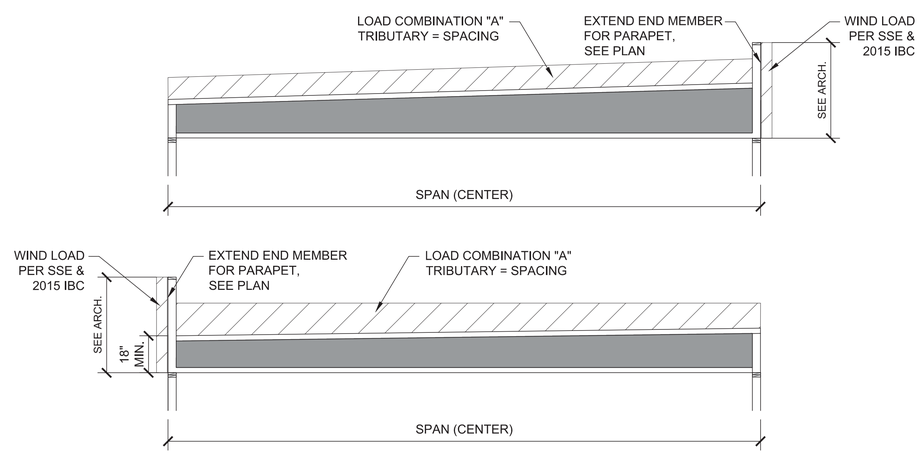

ROOF TRUSS SCHEDULE

MARK	SPACING	SPAN CENTER	LOAD COMBINATION	NOTES
TR1	24" O.C.	18'-3 1/2"	A	PARAPET AT EXTER. WALL
TR2	24" O.C.	15'-6 1/2"	A	PARAPET AT EXTER. WALL
TR3	24" O.C.	33'-1"	A	PARAPET AT EXTER. WALL

COORDINATE WITH MECHANICAL FOR UNIT WEIGHTS, SIZES AND LOCATIONS.

LOAD COMBINATION "A"
Dead Load: 15 p.s.f.
Live Load: 20 p.s.f.
Total Load: 35 p.s.f.

(4) PRE-FABRICATED METAL PLATED ROOF TRUSSES

Scale: N.T.S.

MOLZENCORBIN
2701 Miles Road SE
Albuquerque, New Mexico 87106
505 242 5700 office
505 242 0673 fax
MolzenCorbin.com

NUMERIC SCALE CONFIRMATION
DRAWINGS ARE DEPICTED AT INTENDED NUMERIC SCALES
IF THIS BAR EQUALS ONE INCH

NEW MEXICO REGISTERED PROFESSIONAL ENGINEER JAMES CRAIG HAGELGANS 15559
6/12/19

REV NO	REV DATE	DESCRIPTION

PROJECT NUMBER: SFC182-11
DESIGNED BY: JCH
DRAWN BY: DM
CHECKED BY: JCH
PRIME DESIGN PROFESSIONAL: JOHN PATE
PROJECT DATE: JUNE 2019

GENERAL STRUCTURAL NOTES AND DETAILS

LA PUEBLA FIRE STATION ADDITION
SANTA FE COUNTY
LA PUEBLA, NEW MEXICO

ABQ Engineering
Civil ▪Structural ▪Mechanical ▪Plumbing ▪Electrical
8102 Menaul Blvd. NE, Suite D, Albuquerque, NM 87110
tele: 505.255.7802 Proj. No.: 18-010 www.abqeng.com

S-003
SHEET 3 of 7

© COPYRIGHT

PLOT DATE: 6/13/2019 10:06 AM
SAVE DATE: 6/11/2019 10:01 AM
K:\PROJECTS\2018\18-010\STRUCTURAL\STRUCTURAL SET LPTS

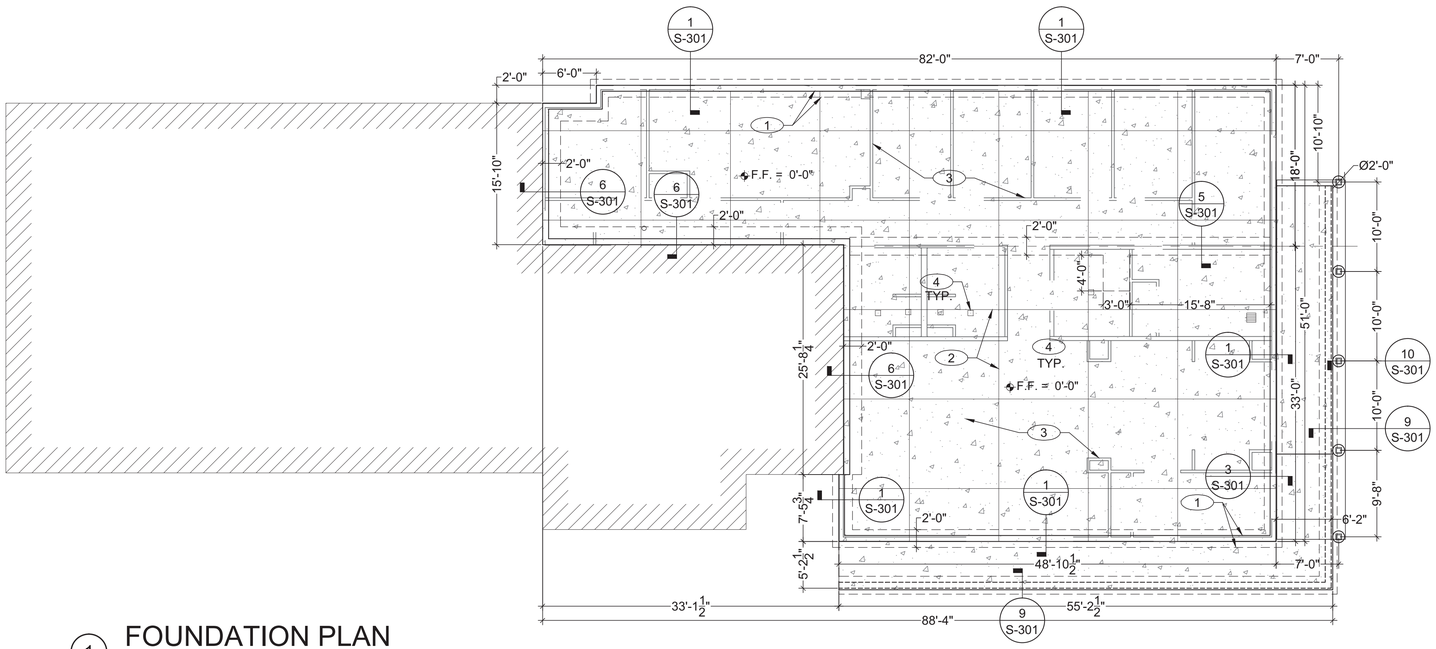

1 FOUNDATION PLAN

Scale: 1/8" = 1'-0"

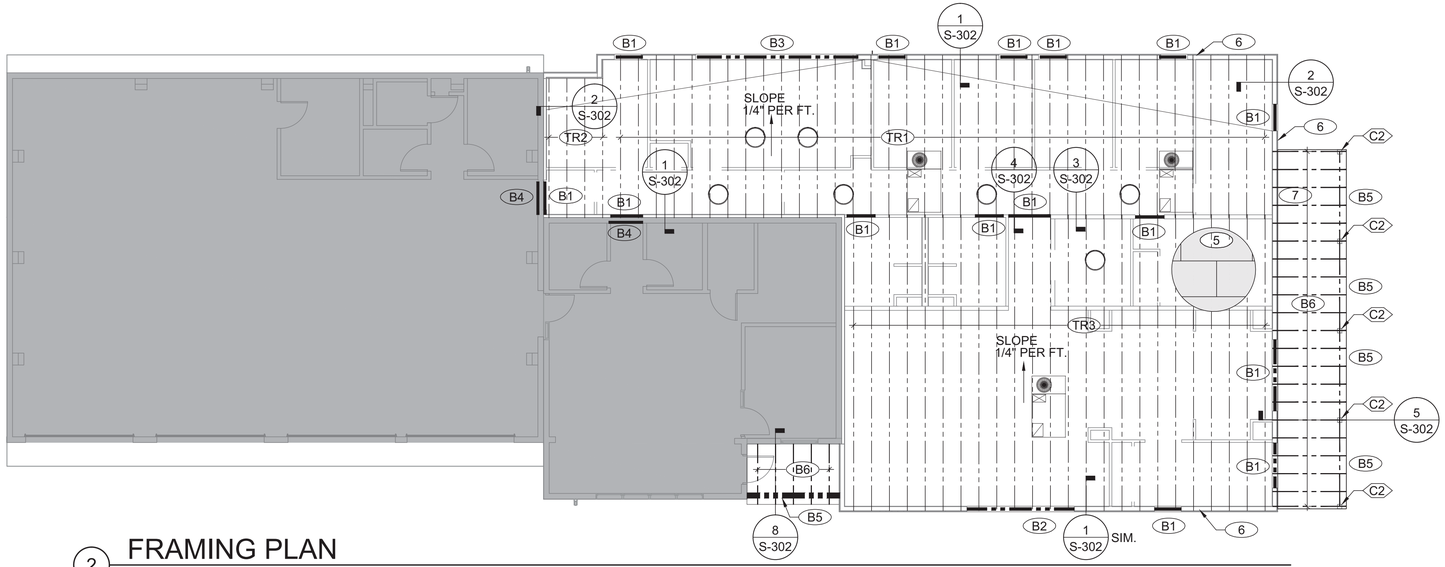

2 FRAMING PLAN

Scale: 1/8" = 1'-0"

BEAM SCHEDULE			
MARK	TYPE	SIZE	NOTES
B1	WOOD	(2)~2x12	SEE S-001,302,501
B2	SCL	5 1/4" x 11 1/4"	SEE S-001,302,501
B3	SCL	5 1/4" x 9 1/2"	SEE S-001,302,501
B4	STEEL HEADER	(2) 4x 4x 1/4" ANGLE	SEE S-001,7/302
B5	STEEL BEAM	TS 6x8x3/16"	SEE S-001,302
B6	STEEL BEAM	TS 2x6x3/16" @ 24"O.C.	SEE S-001,302

COLUMN SCHEDULE			
MARK	TYPE	SIZE	NOTES
C1	BUILT-UP	(3) - 2x6	SEE S-001,301,302
C2	POST - STEEL	6x6x3/16"	SEE S-001,301,302

0 2 4 8 16 24
1/8" = 1'-0"

General Notes

A. OVER-EXCAVATION OF SOIL REMOVED BELOW FOOTINGS SHALL BE REPLACED AND COMPACTED IN LAYERS TO 95% OF MODIFIED PROCTOR DENSITY. SEE 8/S-301.

B. INTERIOR CONCRETE SLABS ON GRADE, UNLESS OTHERWISE NOTED, SHALL BE REINFORCED WITH WELDED WIRE FABRIC MATS AS FOLLOWS:
4" SLAB - 6 x 6 W1.4 x W1.4
6" SLAB - 6 x 6 W2.1 x W2.1

C. ELECTRIC CONDUIT AND OTHER PIPES EMBEDDED IN THE CONCRETE FLOOR SHALL BE PLACED IN ACCORDANCE WITH THE REQUIREMENTS OF ACI 318, PARAGRAPH 6.3.

D. LOCATE ALL SLEEVES, DRAINS, OPENINGS, EMBEDDED ITEMS, ETC. THAT ARE INDICATED ON THE DRAWINGS. IT IS THE CONTRACTOR'S RESPONSIBILITY TO ENSURE THAT ALL SUCH ITEMS ARE CORRECTLY POSITIONED & INSTALLED PRIOR TO PLACEMENT OF CONCRETE.

F. SEE SHEET S-001 FOR ADDITIONAL NOTES AND LEGEND.

G. CONTRACTOR TO COORDINATE ALL BUILDING DIMENSIONS WITH ARCHITECTURAL DRAWING PRIOR TO FORMING.

H. CONTRACTOR TO COORDINATE ALL ROOF/FLOOR PENETRATIONS WITH MECHANICAL, ELECTRICAL AND ARCHITECTURAL DRAWINGS PRIOR TO CONSTRUCTION.

I. JOIST BEARING HEIGHTS - SEE ARCHITECTURAL DRAWINGS.

J. SEE SHEET S-501 FOR STANDARD STRUCTURAL FRAMING SECTIONS AND DETAILS.

Foundation Keyed Notes

1. OUTLINE OF CONCRETE FOUNDATION & FOOTING BELOW GRADE. SEE FOUNDATION PLAN & DETAILS FOR INFORMATION.

2. SAWN CONTROL JOINT. C.J. SHALL BE A MAXIMUM 12'-0" O.C. EACH WAY. SEE PLAN FOR LAYOUT AND DETAIL 7/S-301.

3. INTERIOR NON-LOADBEARING FRAMED WALLS WILL BE ANCHORED TO SLAB ON GRADE WITH 1/2" Ø A307 ANCHOR BOLTS @ 72" O.C. OR APPROVED EQUAL SEE SHEET 3/S-003. SEE ARCH. DRAWINGS FOR INTERIOR WALL LOCATIONS AND LAYOUT.

4. 4" SLAB ON GRADE. SEE ARCHITECTURAL AND MECHANICAL DRAWING FOR FLAB PENETRATIONS AND FLOOR DRAIN LOCATIONS. REFER TO GENERAL NOTE "F" THIS SHEET

Framing Keyed Notes:

5. ROOF SHEATHING SHALL BE 1/2", STRUCTURAL I PANELS (EXPOSURE 1, SPAN RATING 32/16), SEE 2/S-501

6. 2x6 WOOD STUDS @ 24" O.C. WALL SHEATHING SHALL BE 1/2" STRUCTURAL I PANELS (EXPOSURE 1), SEE 1/S-501 FOR ATTACHMENT.

7. ROOF SYSTEM ATTACHED DIRECTLY TO JOISTS, SEE ARCHITECTURAL DRAWINGS FOR TYPE AND STYLE..

Legend

- CONTROL JOINT @ 12'-0" O.C.E.W. MAXIMUM
- GRID LINE
- EDGE OF THICKEND SLAB
- EDGE OF STEM WALL
- EDGE OF TURNDOWN SLAB
- JOIST LINE
- BEAMS - SEE SCHEDULE
- RIM BOARD - SEE S302

ABQ Engineering
Civil ▪Structural ▪Mechanical ▪Plumbing ▪Electrical
8102 Menaul Blvd. NE, Suite D, Albuquerque, NM 87110
tele: 505.255.7802 Proj. No.: 18-010 www.abqeng.com

MOLZENCORBIN
2701 Miles Road SE
Albuquerque, New Mexico 87106
505 242 5700 office
505 242 0673 fax
MolzenCorbin.com

NUMERIC SCALE CONFIRMATION
DRAWINGS ARE DEPICTED AT INTENDED NUMERIC SCALES
IF THIS BAR EQUALS ONE INCH

JAMES CRAIG HAGELGANZ NEW MEXICO 15559 PROFESSIONAL ENGINEER
6/12/19

REV NO	REV DATE	DESCRIPTION

PROJECT NUMBER: SFC182-11
DESIGNED BY: JCH
DRAWN BY: DM
CHECKED BY: JCH
PRIME DESIGN PROFESSIONAL: JOHN PATE
PROJECT DATE: JUNE 2019

FOUNDATION PLAN AND FRAMING PLAN

LA PUEBLA FIRE STATION ADDITION
SANTA FE COUNTY
LA PUEBLA, NEW MEXICO

S-101
SHEET 4 of 7

© COPYRIGHT

PLOT DATE: 6/13/2019 10:06 AM
SAVE DATE: 6/11/2019 10:01 AM
K:\PROJECTS\2018\18-010\STRUCTURAL\STRUCTURAL SET LPTS

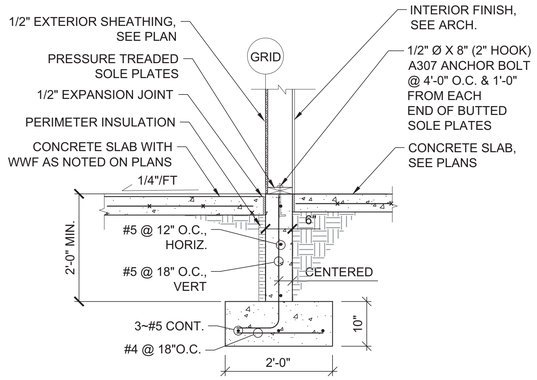

1 TYP. STEM WALL

Scale: 3/4" = 1'-0"

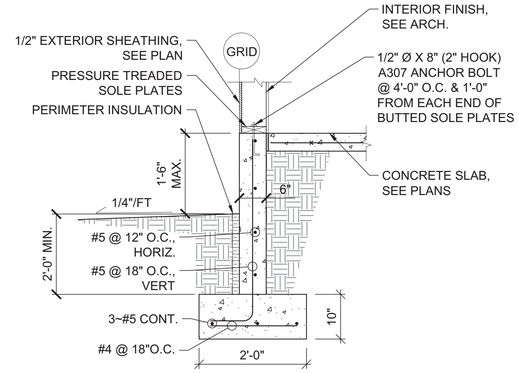

2 TYP. STEM WALL

Scale: 3/4" = 1'-0"

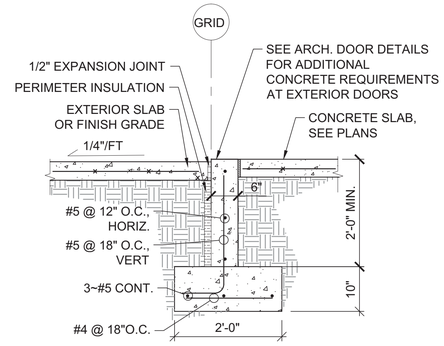

3 TYP. STEM WALL

Scale: 3/4"=1'-0"

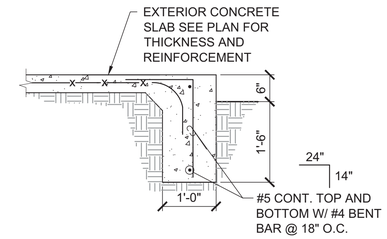

4 TYP. TURN DOWN

Scale: 3/4"=1'-0"

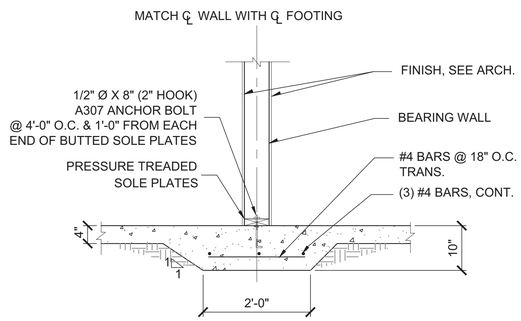

5 THICKENED SLAB WITH STEP

Scale: 3/4" = 1'-0"

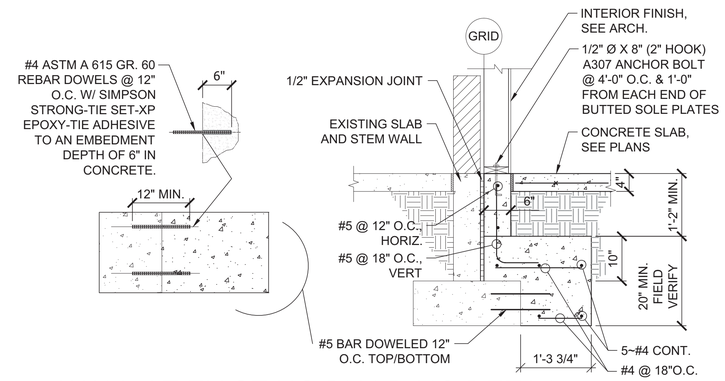

6 WALL AT EXISTING BUILDING DETAIL

Scale: 3/4" = 1'-0"

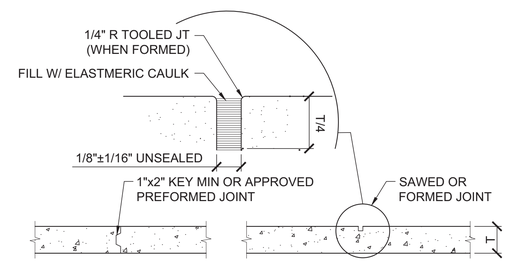

7 CONCRETE CONTROL JOINT DETAIL

Scale: 3/4" = 1'-0"

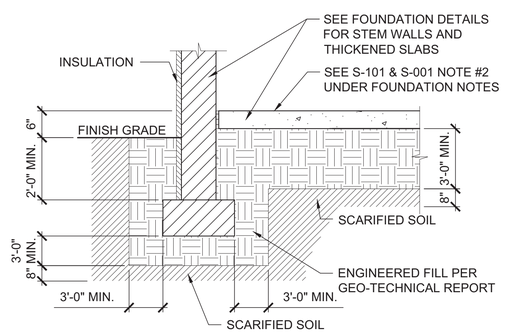

8 EXCAVATION/FILL DETAIL

Scale: N.T.S.

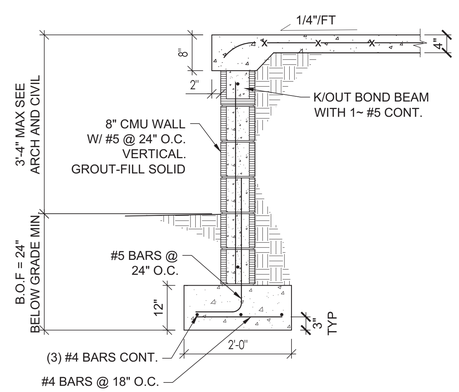

9 PATIO RAMP RETAINING DETAIL

Scale: 3/4" = 1'-0"

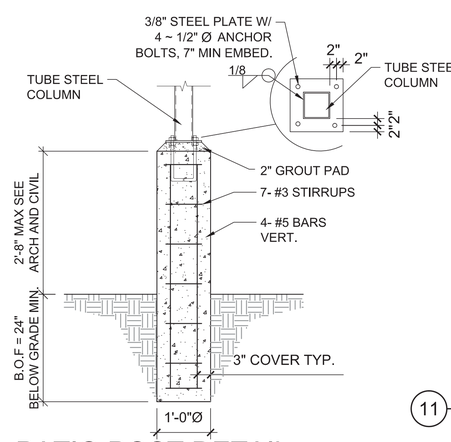

10 PATIO POST DETAIL

Scale: 3/4" = 1'-0"

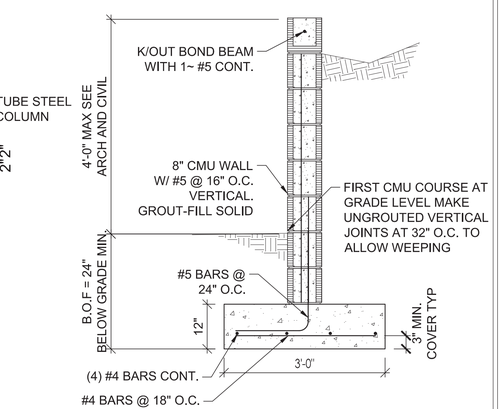

11 SITE RETAINING WALL DETAIL

Scale: 3/4" = 1'-0"

MOLZENCORBIN
2701 Miles Road SE
Albuquerque, New Mexico 87106
505 242 5700 office
505 242 0673 fax
MolzenCorbin.com

NUMERIC SCALE CONFIRMATION
DRAWINGS ARE DEPICTED AT INTENDED NUMERIC SCALES
IF THIS BAR EQUALS ONE INCH

NEW MEXICO 15559 JAMES CRAIG HAGELGANS PROFESSIONAL ENGINEER
6/12/19

REV NO	REV DATE	DESCRIPTION

PROJECT NUMBER: SFC182-11
DESIGNED BY: JCH
DRAWN BY: DM
CHECKED BY: JCH
PRIME DESIGN PROFESSIONAL: JOHN PATE
PROJECT DATE: JUNE 2019

FOUNDATION DETAILS

LA PUEBLA FIRE STATION ADDITION
SANTA FE COUNTY
LA PUEBLA, NEW MEXICO

ABQ Engineering
Civil ▪Structural ▪Mechanical ▪Plumbing ▪Electrical
8102 Menaul Blvd. NE, Suite D, Albuquerque, NM 87110
tele: 505.255.7802 Proj. No.: 18-010 www.abqeng.com

S-301

SHEET 5 of 7

© COPYRIGHT

PLOT DATE: 6/13/2019 10:06 AM
SAVE DATE: 6/11/2019 10:01 AM
K:\PROJECTS\2018\18-010\STRUCTURAL\STRUCTURAL SET UPTS

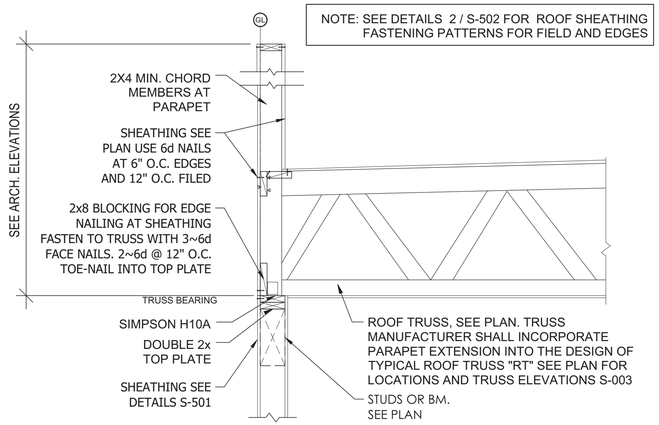

1 FRAMING DETAIL

Scale: 3/4" = 1'-0"

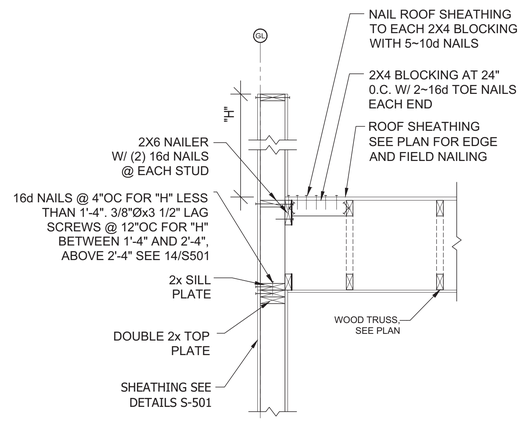

2 FRAMING DETAIL

Scale: 3/4" = 1'-0"

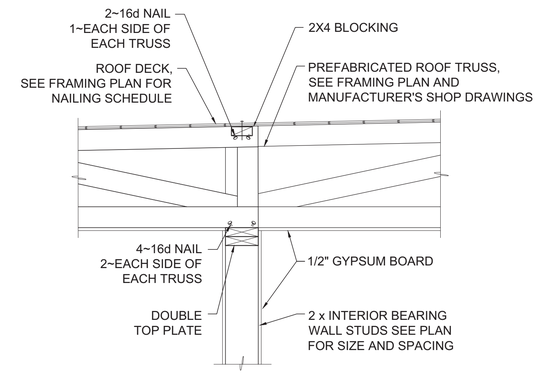

3 FRAMING DETAIL

Scale: 3/4" = 1'-0"

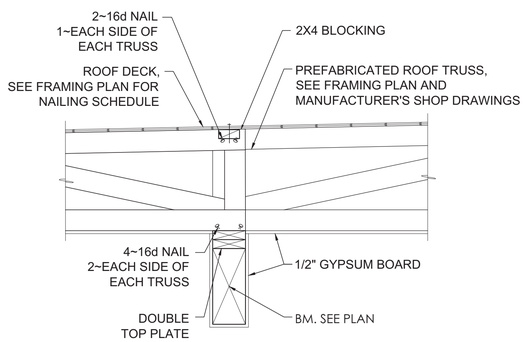

4 FRAMING DETAIL

Scale: 3/4" = 1'-0"

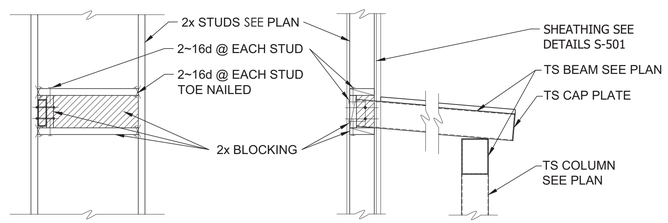

5 STEEL BEAM BEARING AT STUD WALL

Scale: 3/4" = 1'-0"

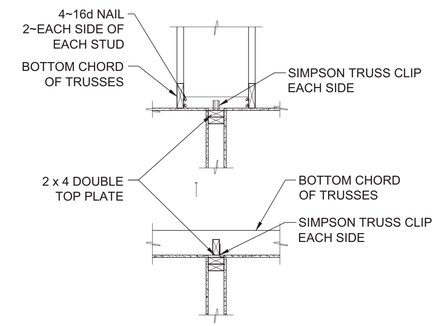

6 FRAMING DETAIL

Scale: 3/4" = 1'-0"

LINTEL HEADER SCHEDULE		
SPAN	ANGLE SIZE	SUPPORT
5'-0" MAX.	(2) 4" x 4" x 1/4"	(2) - ∠4x4x1/4"

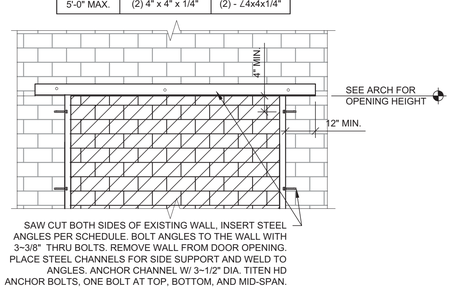

7 FRAMING DETAIL

Scale: 3/4" = 1'-0"

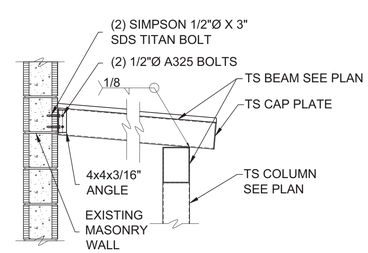

8 PATIO COVER AT CMU WALL

Scale: 3/4" = 1'-0"

MOLZENCORBIN
2701 Miles Road SE
Albuquerque, New Mexico 87106
505 242 5700 office
505 242 0673 fax
MolzenCorbin.com

NUMERIC SCALE CONFIRMATION
DRAWINGS ARE DEPICTED AT INTENDED NUMERIC SCALES
IF THIS BAR EQUALS ONE INCH

JAMES CRAIG HAGELGANZ NEW MEXICO 15559 PROFESSIONAL ENGINEER
6/12/19

REV NO	REV DATE	DESCRIPTION

PROJECT NUMBER: SFC182-11
DESIGNED BY: JCH
DRAWN BY: DM
CHECKED BY: JCH
PRIME DESIGN PROFESSIONAL: JOHN PATE
PROJECT DATE: JUNE 2019

FRAMING DETAILS

LA PUEBLA FIRE STATION ADDITION
SANTA FE COUNTY
LA PUEBLA, NEW MEXICO

ABQ Engineering
Civil ▪Structural ▪Mechanical ▪Plumbing ▪Electrical
8102 Menaul Blvd. NE, Suite D, Albuquerque, NM 87110
tele: 505.255.7802 Proj. No.: 18-010 www.abqeng.com

S-302

SHEET 6 of 7

© COPYRIGHT

PLOT DATE: 6/13/2019 10:06 AM
SAVE DATE: 6/11/2019 10:01 AM
K:\PROJECTS\2018\18-010\STRUCTURAL\STRUCTURAL SET UPS

NOTES:

1. STAGGER JOINTS AS SHOWN.
2. MIN SIZE OF SHEET SHALL BE 4'-0"x4'-0" EXCEPT AT ENDS.
3. NAILS SHALL BE DRIVEN TIGHT BUT SHALL NOT FRACTURE SURFACE OF SHEATHING.
4. TOLERANCE ON NAILING; THE AVERAGE NAIL SPACING OVER ANY 4'-0" LENGTH SHALL BE AT LEAST THAT NOTED.

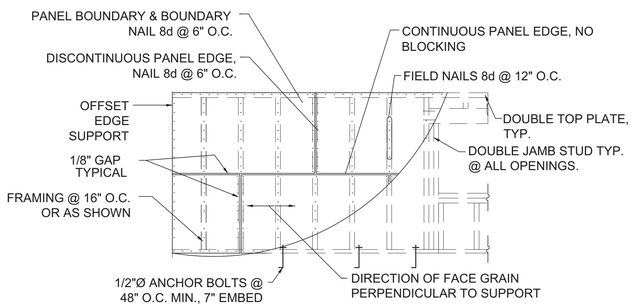

NOTE: EXTERIOR WALLS SHALL HAVE STRUCTURAL GRADE I SHEATHING. (OSB/PLYWOOD) CONTINUOUS.

1 INTERIOR SHEAR WALLS-NAILING DETAIL

Scale: N.T.S.

NOTES:

1. STAGGER JOINTS AS SHOWN.
2. MIN SIZE OF SHEET SHALL BE 4'-0"x4'-0" EXCEPT AT ENDS.
3. NAILS SHALL BE DRIVEN TIGHT BUT SHALL NOT FRACTURE SURFACE OF SHEATHING.
4. TOLERANCE ON NAILING; THE AVERAGE NAIL SPACING OVER ANY 4'-0" LENGTH SHALL BE AT LEAST THAT NOTED.

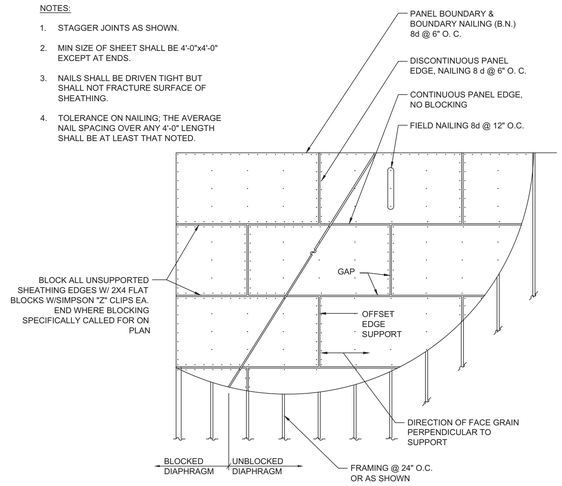

2 FLOOR/ROOF SHEATHING (NAILING)

Scale: N.T.S.

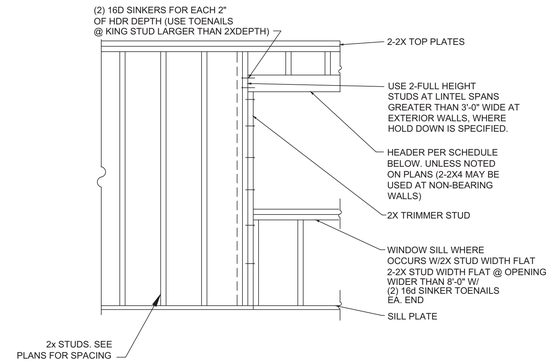

3 TYP. STUD WALL/WINDOW FRAMING

Scale: N.T.S.

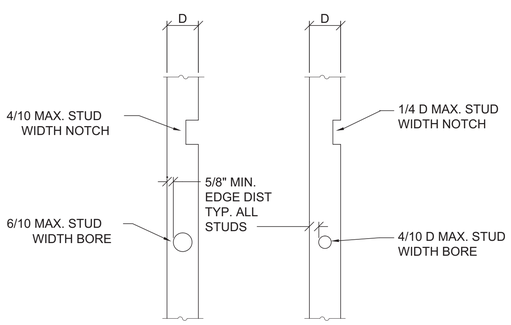

NOTCH OR BORE FRACTION OF STUD	2x4	2x6	2x8
1/4 D	7/8"	1 3/8"	1 3/4"
4/10 D	1 3/8"	2 1/8"	3"
6/10 D	2"	3 1/4"	4 1/4"

NOTE:
NOTCH AND BORE NOT TO OCCUR ON SAME STUD WITHIN 4ft OF EACH OTHER

4 NON -BEARING STUD WALL BELOW BEAM

Scale: 3/4"=1'-0"

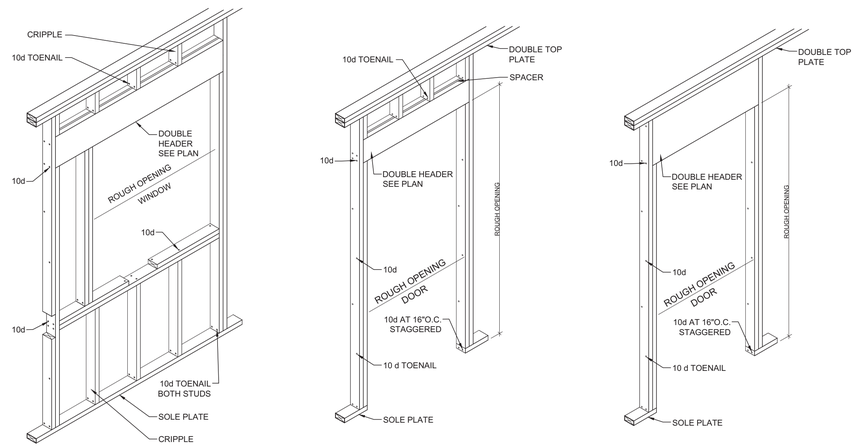

5 TYPICAL FRAMING AT OPENINGS

Scale: 3/4"=1'-0"

MOLZENCORBIN
2701 Miles Road SE
Albuquerque, New Mexico 87106
505 242 5700 office
505 242 0673 fax
MolzenCorbin.com

NUMERIC SCALE CONFIRMATION
DRAWINGS ARE DEPICTED AT INTENDED NUMERIC SCALES
IF THIS BAR EQUALS ONE INCH

JAMES CRAIG HACKELEMANN NEW MEXICO 15559
6/12/19

REV NO	REV DATE	DESCRIPTION

PROJECT NUMBER: SFC182-11
DESIGNED BY: JCH
DRAWN BY: DM
CHECKED BY: JCH
PRIME DESIGN PROFESSIONAL: JOHN PATE
PROJECT DATE: JUNE 2019

TYPICAL FRAMING DETAILS

LA PUEBLA FIRE STATION ADDITION
SANTA FE COUNTY
LA PUEBLA, NEW MEXICO

ABQ Engineering
Civil ▪Structural ▪Mechanical ▪Plumbing ▪Electrical
8102 Menaul Blvd. NE, Suite D, Albuquerque, NM 87110
tele: 505.255.7802 Proj. No.: 18-010 www.abqeng.com

S-501

© COPYRIGHT

PLOT DATE: 6/13/2019 10:06 AM
SAVE DATE: 6/11/2019 10:01 AM
K:\PROJECTS\2018\18-010\STRUCTURAL\STRUCTURAL SET LPTS

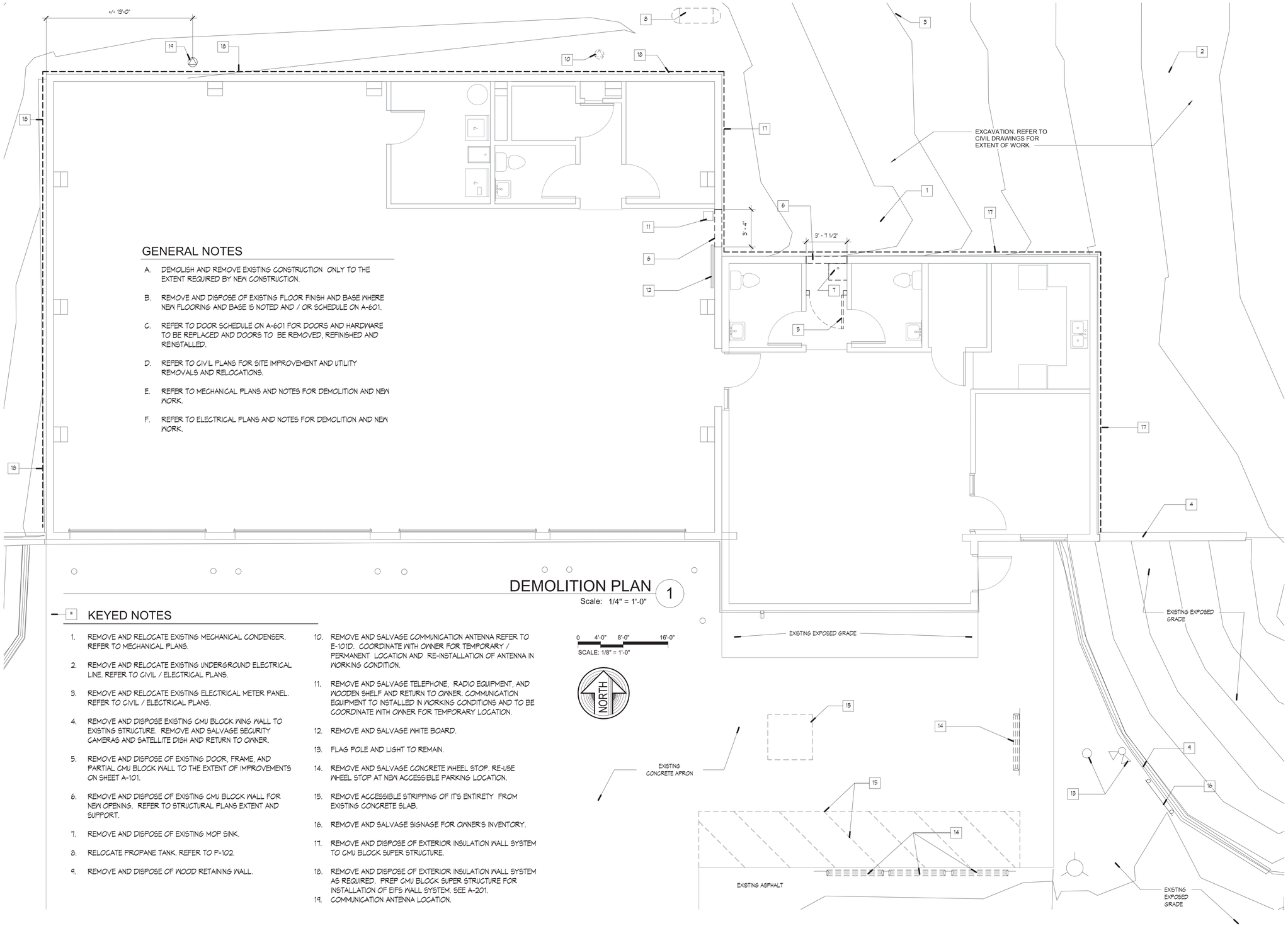

GENERAL NOTES

A. DEMOLISH AND REMOVE EXISTING CONSTRUCTION ONLY TO THE EXTENT REQUIRED BY NEW CONSTRUCTION.

B. REMOVE AND DISPOSE OF EXISTING FLOOR FINISH AND BASE WHERE NEW FLOORING AND BASE IS NOTED AND / OR SCHEDULE ON A-601.

C. REFER TO DOOR SCHEDULE ON A-601 FOR DOORS AND HARDWARE TO BE REPLACED AND DOORS TO BE REMOVED, REFINISHED AND REINSTALLED.

D. REFER TO CIVIL PLANS FOR SITE IMPROVEMENT AND UTILITY REMOVALS AND RELOCATIONS.

E. REFER TO MECHANICAL PLANS AND NOTES FOR DEMOLITION AND NEW WORK.

F. REFER TO ELECTRICAL PLANS AND NOTES FOR DEMOLITION AND NEW WORK.

DEMOLITION PLAN 1

Scale: 1/4" = 1'-0"

KEYED NOTES

1. REMOVE AND RELOCATE EXISTING MECHANICAL CONDENSER. REFER TO MECHANICAL PLANS.
2. REMOVE AND RELOCATE EXISTING UNDERGROUND ELECTRICAL LINE. REFER TO CIVIL / ELECTRICAL PLANS.
3. REMOVE AND RELOCATE EXISTING ELECTRICAL METER PANEL. REFER TO CIVIL / ELECTRICAL PLANS.
4. REMOVE AND DISPOSE EXISTING CMU BLOCK WING WALL TO EXISTING STRUCTURE. REMOVE AND SALVAGE SECURITY CAMERAS AND SATELLITE DISH AND RETURN TO OWNER.
5. REMOVE AND DISPOSE OF EXISTING DOOR, FRAME, AND PARTIAL CMU BLOCK WALL TO THE EXTENT OF IMPROVEMENTS ON SHEET A-101.
6. REMOVE AND DISPOSE OF EXISTING CMU BLOCK WALL FOR NEW OPENING. REFER TO STRUCTURAL PLANS EXTENT AND SUPPORT.
7. REMOVE AND DISPOSE OF EXISTING MOP SINK.
8. RELOCATE PROPANE TANK. REFER TO P-102.
9. REMOVE AND DISPOSE OF WOOD RETAINING WALL.
10. REMOVE AND SALVAGE COMMUNICATION ANTENNA REFER TO E-101D. COORDINATE WITH OWNER FOR TEMPORARY / PERMANENT LOCATION AND RE-INSTALLATION OF ANTENNA IN WORKING CONDITION.
11. REMOVE AND SALVAGE TELEPHONE, RADIO EQUIPMENT, AND WOODEN SHELF AND RETURN TO OWNER. COMMUNICATION EQUIPMENT TO INSTALLED IN WORKING CONDITIONS AND TO BE COORDINATE WITH OWNER FOR TEMPORARY LOCATION.
12. REMOVE AND SALVAGE WHITE BOARD.
13. FLAG POLE AND LIGHT TO REMAIN.
14. REMOVE AND SALVAGE CONCRETE WHEEL STOP. RE-USE WHEEL STOP AT NEW ACCESSIBLE PARKING LOCATION.
15. REMOVE ACCESSIBLE STRIPPING OF IT'S ENTIRETY FROM EXISTING CONCRETE SLAB.
16. REMOVE AND SALVAGE SIGNAGE FOR OWNER'S INVENTORY.
17. REMOVE AND DISPOSE OF EXTERIOR INSULATION WALL SYSTEM TO CMU BLOCK SUPER STRUCTURE.
18. REMOVE AND DISPOSE OF EXTERIOR INSULATION WALL SYSTEM AS REQUIRED. PREP CMU BLOCK SUPER STRUCTURE FOR INSTALLATION OF EIFS WALL SYSTEM. SEE A-201.
19. COMMUNICATION ANTENNA LOCATION.

MOLZENCORBIN

2701 Miles Road SE
Albuquerque, New Mexico 87106
505 242 5700 office
505 242 0673 fax
MolzenCorbin.com

NOTICE OF EXTENDED PAYMENT PROVISION:
THIS CONTRACT ALLOWS THE OWNER TO MAKE PAYMENT WITHIN 45 DAYS AFTER SUBMISSION OF AN UNDISPUTED REQUEST FOR PAYMENT

NUMERIC SCALE CONFIRMATION

DRAWINGS ARE DEPICTED AT INTENDED NUMERIC SCALES IF THIS BAR EQUALS ONE INCH

STATE OF NEW MEXICO
JOHN QUINN PATE
NO. 1784
REGISTERED ARCHITECT
6/12/19

REV NO	REV DATE	DESCRIPTION

PROJECT NUMBER: SFC182-11
DESIGNED BY: JSA
DRAWN BY: IWS
CHECKED BY: JQP
PRIME DESIGN PROFESSIONAL: JOHN Q. PATE
PROJECT DATE: JUNE 12, 2019

DEMOLITION FLOOR PLAN

LA PUEBLA FIRE STATION ADDITION
SANTA FE COUNTY
LA PUEBLA, NEW MEXICO

A-101D
SHEET

I:\SANTA FE COUNTY\SFC182-11 La Puebla Fire\DWGS\2019-05-28 ALP-BPxx-.rvt
6/13/2019 10:25:13 AM
© COPYRIGHT

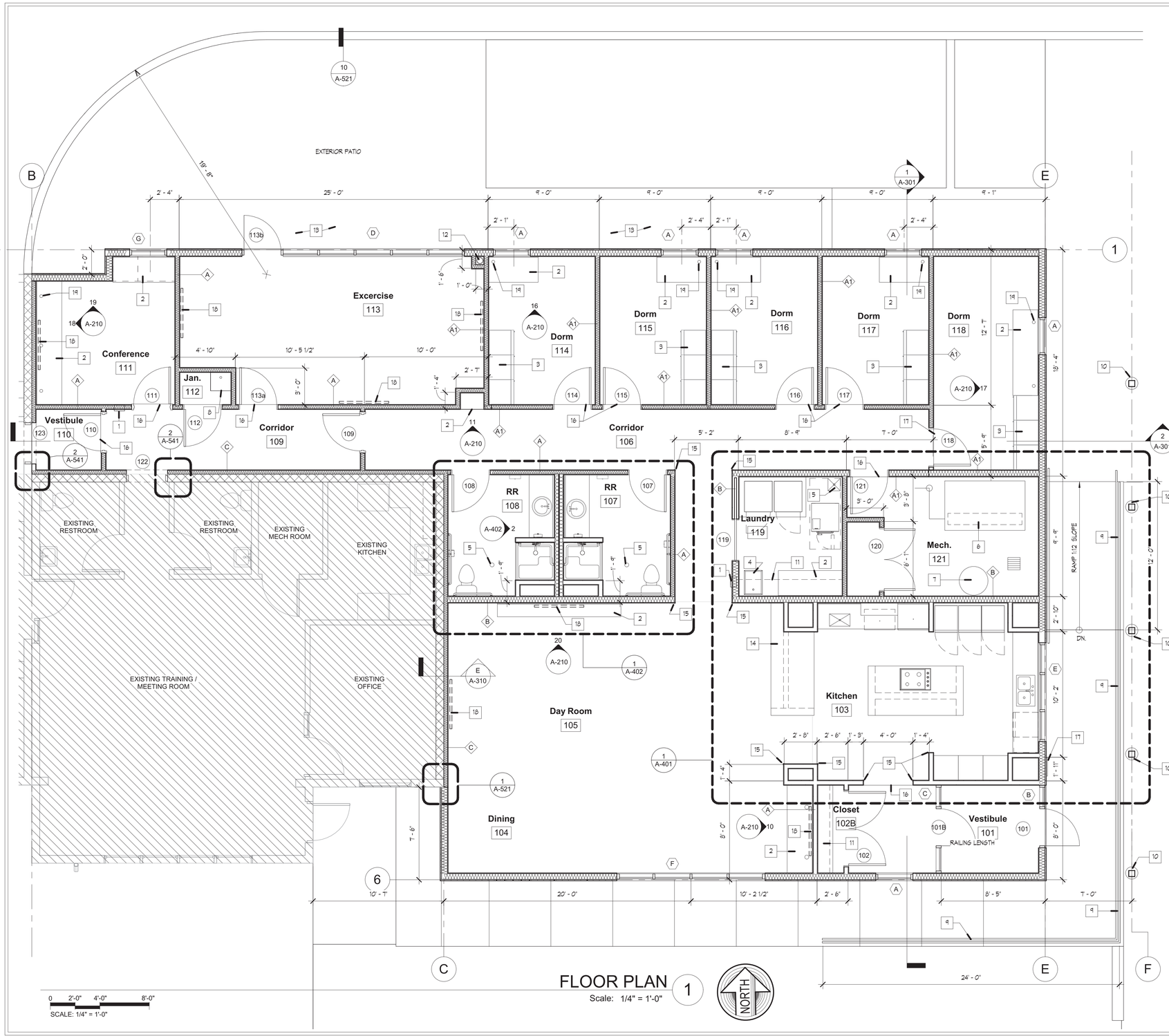

FLOOR PLAN 1

Scale: 1/4" = 1'-0"

GENERAL NOTES

A. REFER TO CIVIL DRAWINGS FOR EXTERIOR WALKS, RAMPS, AND STEPS.
B. EXTERIOR WALL DIMENSIONS AND GRID LINES ARE FACE OF SHEATHING. COORDINATE WITH STRUCTURAL DRAWINGS.
C. STUD FRAMED WALL DIMENSIONS ARE FACE TO STUD, EXCEPTION ARE NOTED.
D. CMU WALLS ARE TO DIMENSIONED TO FACE OF CMU.
E. CLEAR (CLR) DIMENSIONS ARE FACE OF FINISH.
F. CENTERLINE DIMENSIONS (CL) ARE CENTER OF DOORS, GLAZED UNITS, FIXTURES, OR COLUMNS.
G. INSTALL SOUND ATTENUATIONS BATTS AROUND AND BETWEEN DORMS, CONFERENCE, TOILETS ROOMS, MECHANICAL, LAUNDRY, AND EXERCISE ROOMS.
H. GYPSUM BOARD SHALL BE OF TYPES SPECIFIED; WATER RESISTANT AT PLUMBING WALLS, MOISTURE AND MOLD RESISTANT (TILE BACKER) BOARD AT TILED WALLS.
I. VERTICAL DIMENSIONS NOTED AS A.F.F. (ABOVE FINISH FLOOR) ARE DISTANCES FROM THE TOP OF THE FINISHED INTERIOR SLAB AND DO NOT TAKE FLOOR COVERING MATERIALS INTO ACCOUNT.
J. ELEVATION OF FINISHED INTERIOR SLAB IS NOTED ON THE C-101.
K. DORMS SHALL BE SEPARATED BY 1-HOUR FIRE PARTITION
L. REFER TO SHEET A-601 FOR OPENING SCHEDULE AND TYPES.
M. REFER TO SHEET A-610 FOR ROOM FINISH SCHEDULE.
N. PAINTING INCLUDES ACCESS PANELS EXPOSED BEAMS, JOISTS, COLUMN, BRACING, EXPOSED DUCT WORK, PIPING AND CONDUIT. REFER TO SPECIFICATIONS 09 90 00 FOR PAINT SCHEDULES.
O. STUD FRAMING AND GYPSUM BOARD SHALL BE USED ABO OPENINGS AND STOREFRONT AT CHANGES IN CEILINGS. EXTEND GYPSUM BOARD TO 4" MINIMUM ABOVE ADJACEN CEILINGS OR TO DECK.

KEYED NOTES

1. SEMI- RECESS FIRE EXTINGUISHER CABINET.
2. PLASTIC LAMINATE COUNTERTOP. REFER TO SHEET A-210 INTERIOR ELEVATIONS
3. STORAGE CASEWORK. REFER TO SHEET A-210 INTERIOR ELEVATIONS.
4. UTILITY SINK
5. FLOOR SINK. REFER TO PLUMBING SHEETS.
6. MECHANICAL UNIT
7. WATER HEATER
8. MOP SINK
9. METAL GUARDRAIL AND HANDRAIL
10. STEEL COLUMNS WITH CONCRETE SUPPORT. REFER TO SHEET STRUCTURAL DRAWINGS S-101.
11. ROD AND SHELF
12. ROOF DRAIN
13. CONCRETE PAD
14. PORCELAIN COUNTERTOP. REFER TO SHEET A-210 INTERIOR ELEVATIONS
15. CORNER GUARDS
16. METAL TRANSITION FLOOR STRIPS
17. DEDICATION WALL PLAQUE.
18. WALL MOUNTED TV LOCATIONS. PROVIDE POWER TO UNIT.
19. CASEWORK WIRE GROMMETS. TYP.

WALL TYPES

EXTERIOR WALL
2 X 6 STUDS WITH SHEATHING PER S-101 EXTERIOR INSULATION FINISH SYSTEM. INTERIOR FINISH 5/8" TYPE 'X' GYPSUM BATTS INSULATION IN CAVITY

A — WALL TYPE A
INTERIOR PARTITION
2 X 4 STUDS WITH 5/8" TYPE 'X' GYPSUM ON BOTH SIDES OF CAVITY WALL WITH SOUND ATTENUATION BATTS EXTEND WALL TO DECK

A1 — WALL TYPE A1
INTERIOR PARTITION
2 X 4 STUDS @16" O.C. WITH 5/8" TYPE 'X' GYPSUM ON BOTH SIDES OF CAVITY WALL WITH SOUND ATTENUATION BATTS EXTEND WALL TO DECK. SEAL ALL PENETRATIONS UL Des U305,& U314.

B — WALL TYPE B
INTERIOR PARTITION
2X6 FRAMING WITH TYPE 'X' GYPSUM BOARD ON EACH SIDE TO ROOF DECK. REFER TO WALL SECTION AS PROVIDED. WALL TO DECK

C — WALL TYPE C
FURRED WALL
EXISTING CMU BLOCK WALL WITH FURRED 2 X 4 STUDS WITH 5/8" TYPE 'X' GYPSUM ON INTERIOR SIDE OF WALL.

MOLZENCORBIN
2701 Miles Road SE
Albuquerque, New Mexico 87106
505 242 5700 office
505 242 0673 fax
MolzenCorbin.com

NOTICE OF EXTENDED PAYMENT PROVISION:
THIS CONTRACT ALLOWS THE OWNER TO MAKE PAYMENT WITHIN 45 DAYS AFTER SUBMISSION OF AN UNDISPUTED REQUEST FOR PAYMENT

NUMERIC SCALE CONFIRMATION
DRAWINGS ARE DEPICTED AT INTENDED NUMERIC SCALES IF THIS BAR EQUALS ONE INCH

STATE OF NEW MEXICO
JOHN QUINN PATE
NO. 1784
REGISTERED ARCHITECT
6/12/19

REV NO	REV DATE	DESCRIPTION

PROJECT NUMBER: SFC182-11
DESIGNED BY: JSA
DRAWN BY: IWS
CHECKED BY: JSA
PRIME DESIGN PROFESSIONAL: JOHN Q. PATE
PROJECT DATE: JUNE 12, 2019

FLOOR PLAN AND WALL TYPES

LA PUEBLA FIRE STATION ADDITION
SANTA FE COUNTY
LA PUEBLA, NEW MEXICO

A-101
SHEET

© COPYRIGHT

I:\SANTA FE COUNTY\SFC182-11 La Puebla Fire\DWGS\2019-05-28 ALP-BPxx.rvt
6/14/2019 11:14:58 AM

REFLECTED CEILING PLAN 1

Scale: 1/4" = 1'-0"

0 2'-0" 4'-0" 8'-0"
SCALE: 1/4" = 1'-0"

GENERAL NOTES

A. UNLESS NOTED OTHERWISE, EXISTING CEILINGS TO REMAIN. REPLACEMENT CEILING TO MATCH EXISTING AND SHALL REMAIN AT EXISTING CEILING HEIGHT.

B. SEE ELECTRICAL FOR LIGHTING TO BE REPLACED AND FIXTURE SCHEDULE.

C. SEE MECHANICAL FOR EXTENT OF HVAC SUPPLY, RETURN, AND EXHAUST FANS. NOT ALL EXISTING TO REMAIN ARE ON THIS SHOWN ON THIS PLAN

KEYED NOTES

1. ACOUSTICAL CEILINGS
2. EXHAUST FAN
3. TUBULAR DAY LIGHTING DEVICE-SKYLIGHT. TYP.
4. 12"X24" RETURN DIFFUSER. TYP.
5. 12"X24" SUPPLY DIFFUSER. TYP.
6. OPEN TO STRUCTURE. PAINT.
7. 24"X24" RETURN DIFFUSER. TYP.
8. 12"X12" SUPPLY DIFFUSER. TYP.
9. EXPOSED DUCT. PAINT.
10. GYPSUM BOARD CEILING. PAINT.
11. STEEL BEAM. REFER TO STRUCTURAL DRAWINGS. PAINT.
12. STEEL TUBE JOISTS WITH ENDS CLOSED. REFER TO STRUCTURAL DRAWINGS. PAINT.
13. STEEL COLUMN. REFER TO STRUCTURAL DRAWINGS. PAINT.
14. 4" CONDUIT THRU ROOF FOR EQUIPMENT.

LEGEND:

- RECESSED LIGHT FIXTURE
- 2x2 LAY-IN LIGHT FIXTURE
- 2x2 LAY-IN SUSPENDED CEILING SYSTEM,
- LIGHT FIXTURE. REFER TO SHEET E-105
- LIGHT FIXTURE. REFER TO SHEET E-105
- OUTDOOR LIGHT FIXTURE. REFER TO SHEET E-105
- BUILDING LIGHT FIXTURE. REFER TO SHEET E-105
- LIGHT FIXTURE. REFER TO SHEET E-105
- EMERGENCY EGRESS LIGHT FIXTURE WITH BATTERY PACK & OUTLET
- SL — TUBULAR DAY LIGHTING DEVICE SKYLIGHT WITH COVER
- ILLUMINATED EXIT SIGNAGE
- GYPSUM BOARD CEILING
- CEILING SUPPLY AIR OUTLET
- CEILING RETURN INLET

NORTH

MOLZENCORBIN
2701 Miles Road SE
Albuquerque, New Mexico 87106
505 242 5700 office
505 242 0673 fax
MolzenCorbin.com

NOTICE OF EXTENDED PAYMENT PROVISION:
THIS CONTRACT ALLOWS THE OWNER TO MAKE PAYMENT WITHIN 45 DAYS AFTER SUBMISSION OF AN UNDISPUTED REQUEST FOR PAYMENT

NUMERIC SCALE CONFIRMATION

DRAWINGS ARE DEPICTED AT INTENDED NUMERIC SCALES IF THIS BAR EQUALS ONE INCH

STATE OF NEW MEXICO
JOHN QUINN PATE
NO. 1784
REGISTERED ARCHITECT
6/12/19

REV NO	REV DATE	DESCRIPTION

PROJECT NUMBER: SFC182-11
DESIGNED BY: JSA
DRAWN BY: IWS
CHECKED BY: JSA
PRIME DESIGN PROFESSIONAL: JQP
PROJECT DATE: JUNE 12, 2019

REFLECTED CEILING PLAN

LA PUEBLA FIRE STATION ADDITION
SANTA FE COUNTY
LA PUEBLA, NEW MEXICO

A-103
SHEET

© COPYRIGHT

I:\SANTA FE COUNTY\SFC182-11 La Puebla Fire\DWGS\2019-05-28 ALP-BPxx-.rvt
6/14/2019 11:15:01 AM

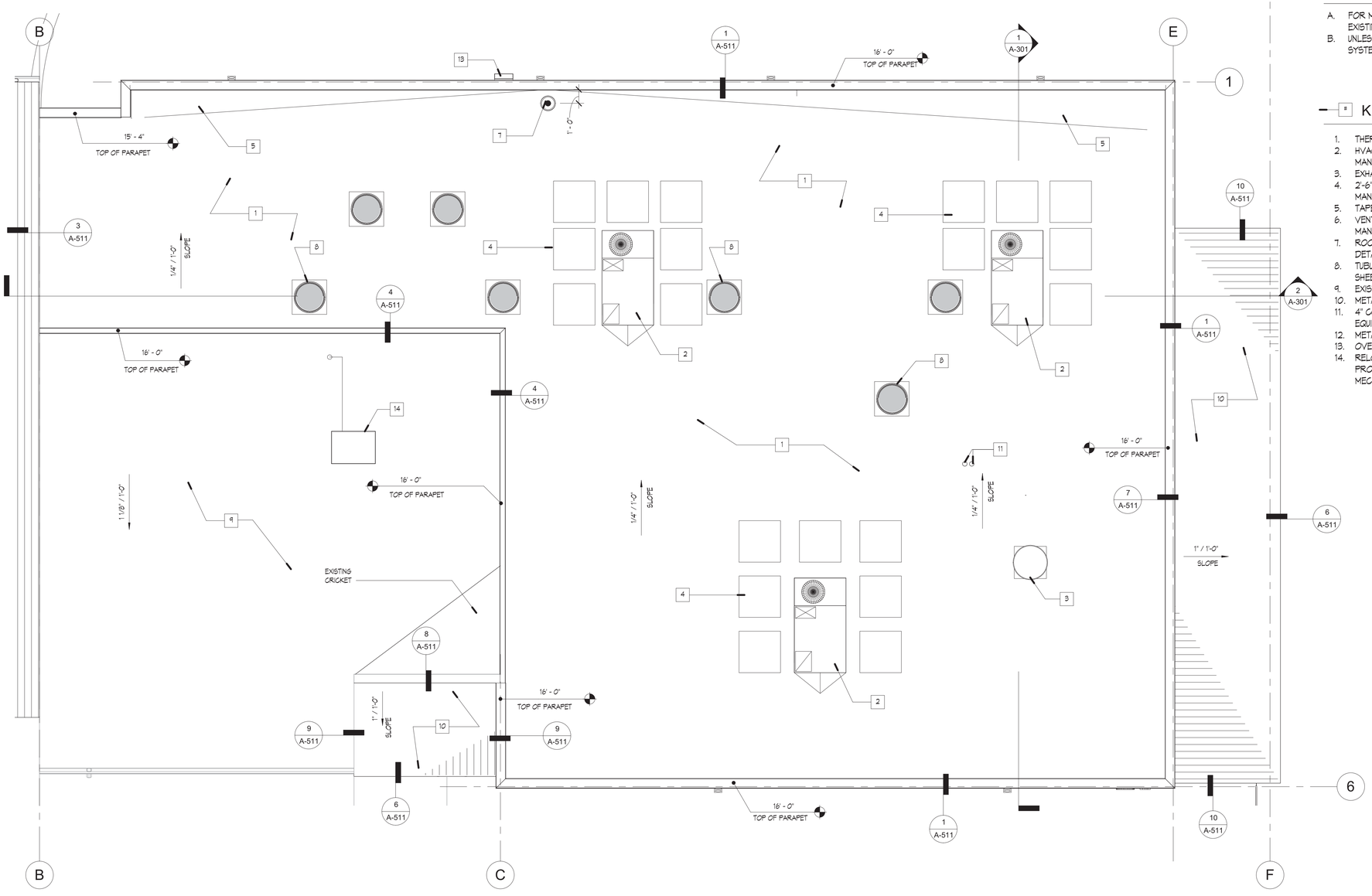

ROOF PLAN 1

Scale: 1/4" = 1'-0"

0 2'-0" 4'-0" 8'-0"

SCALE: 1/4" = 1'-0"

NORTH

GENERAL NOTES

A. FOR MECHANICAL PENETRATIONS AND MODIFICATIONS TO EXISTING, REFER TO MECHANICAL DRAWINGS.
B. UNLESS NOTED OTHERWISE, THE COLOR OF THE TPO ROOF SYSTEM TO BE: TAN

KEYED NOTES

1. THERMOPLASTIC POLYOLEFIN ROOFING SYSTEM (TPO).
2. HVAC UNIT, INSTALL PER MECHANICAL AND ROOF MANUFACTURE'S DETAILS.
3. EXHAUST VENT. REFER TO MECHANICAL DRAWINGS.
4. 2'-6" WIDE WALKWAY PAD BY ROOF SYSTEM MANUFACTURE, INSTALL ROUND MECHANICAL UNIT.
5. TAPERED INSULATION FOR POSITIVE DRAINAGE.
6. VENT THROUGH ROOF PER MECHANICAL AND ROOF MANUFACTURE'S DETAILS, TYPICAL.
7. ROOF DRAIN AND OVERFLOW DRAIN. REFER TO DETAILS ON SHEET 5/A-511.
8. TUBULAR SKYLIGHT ON CURB, REFER TO DETAILS ON SHEET 17/A-511.
9. EXISTING TPO ROOF SYSTEM.
10. METAL ROOF
11. 4" CONDUIT THROUGH ROOF FOR ELECTRICAL EQUIPMENT.
12. METAL COPING. REFER TO DETAIL ON SHEET 1/A-511.
13. OVERFLOW SCUPPER. REFER TO DETAIL 2/A-511.
14. RELOCATE EXISTING CONDENSER ON EXISTING ROOF. PROVIDE AND INSTALL ON 4" THICK PAD. REFER TO MECHANICAL DRAWINGS.

MOLZENCORBIN

2701 Miles Road SE
Albuquerque, New Mexico 87106
505 242 5700 office
505 242 0673 fax
MolzenCorbin.com

NOTICE OF EXTENDED PAYMENT PROVISION:
THIS CONTRACT ALLOWS THE OWNER TO MAKE PAYMENT WITHIN 45 DAYS AFTER SUBMISSION OF AN UNDISPUTED REQUEST FOR PAYMENT

NUMERIC SCALE CONFIRMATION

DRAWINGS ARE DEPICTED AT INTENDED NUMERIC SCALES IF THIS BAR EQUALS ONE INCH

STATE OF NEW MEXICO
JOHN QUINN PATE
NO. 1784
REGISTERED ARCHITECT
6/14/19

REV NO	REV DATE	DESCRIPTION

PROJECT NUMBER:	SFC182-11
DESIGNED BY:	JSA
DRAWN BY:	IWS
CHECKED BY:	JQP
PRIME DESIGN PROFESSIONAL:	JOHN Q. PATE
PROJECT DATE:	JUNE 12, 2019

ROOF PLAN

LA PUEBLA FIRE STATION ADDITION
SANTA FE COUNTY
LA PUEBLA, NEW MEXICO

A-104

SHEET

I:\SANTA FE COUNTY\SFC182-11 La Puebla Fire\DWGS\2019-05-28 ALP-BPxx-.rvt

6/14/2019 11:15:04 AM

© COPYRIGHT

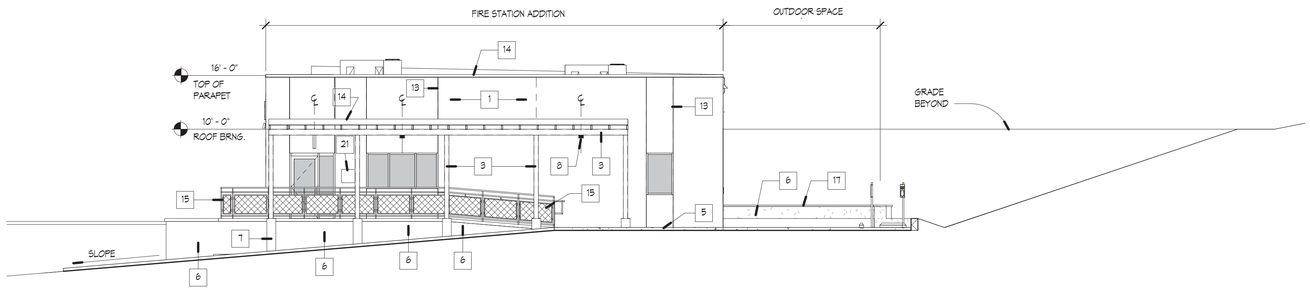

EAST ELEVATION (1)

Scale: 1/8" = 1'-0"

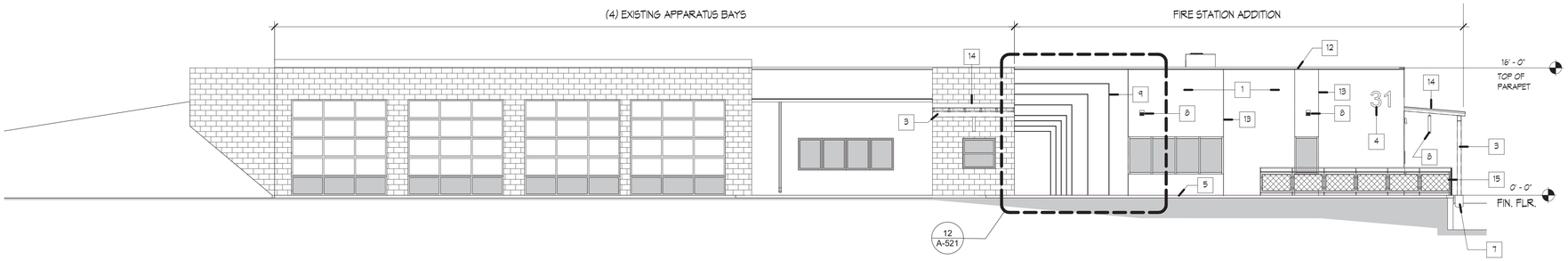

SOUTH ELEVATION (2)

Scale: 1/8" = 1'-0"

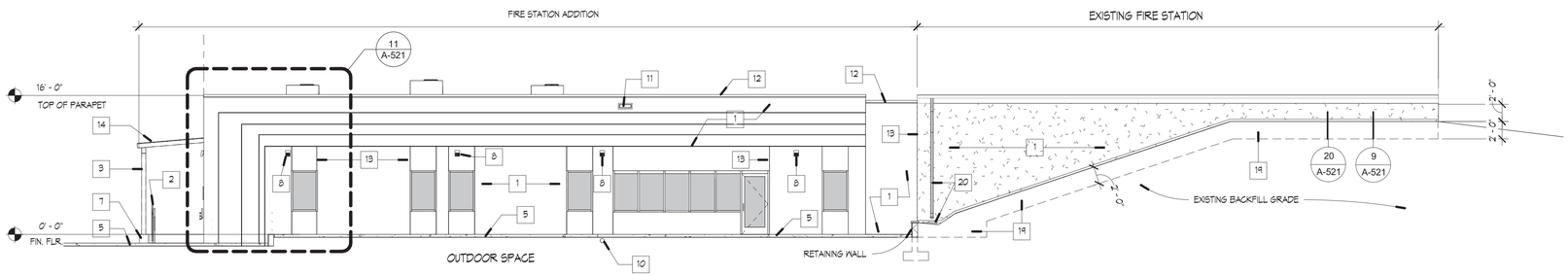

NORTH ELEVATION (3)

Scale: 1/8" = 1'-0"

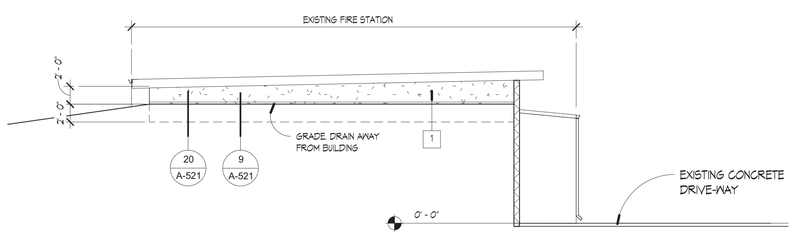

WEST ELEVATION (4)

Scale: 1/8" = 1'-0"

KEYED NOTES

1. EXTERIOR INSULATION FINISH SYSTEM
2. GUARD RAILING
3. STEEL TRELLIS COVERED ENTRY SYSTEM. REFER TO STRUCTURAL DRAWINGS.
4. EXTERIOR SIGNAGE
5. CONCRETE SLAB
6. ARCHITECTURAL COATING FINISH (ACF) ON CONCRETE CMU. TYPICAL.
7. CONCRETE COLUMN SUPPORT. PAINT
8. LIGHT FIXTURE. REFER TO ELECTRICAL DRAWINGS
9. ALUMINUM REVEAL
10. ROOF DRAIN TO DAY LIGHT. REFER TO CIVIL DRAWINGS FOR LOCATION.
11. OVER FLOW SCUPPER
12. METAL COPING
13. STUCCO JOINTS AS REQUIRED
14. METAL ROOF SYSTEM OVER METAL ROOF DECK
15. GUARD RAIL. REFER TO SHEET 18/A-521
16. RETAINING WALL BEYOND. REFER TO STRUCTURAL DRAWINGS.
17. 9 5/8" CMU CAP BLOCK.
18. EXPANSION JOINT AS REQUIRED.
19. RIGID INSULATION BELOW GRADE AS REQUIRED.
20. DOWNSPOUT WITH SPLASH BLOCK
21. DEDICATION PLAQUE LOCATION.

MOLZENCORBIN

2701 Miles Road SE
Albuquerque, New Mexico 87106
505 242 5700 office
505 242 0673 fax
MolzenCorbin.com

NOTICE OF EXTENDED PAYMENT PROVISION:
THIS CONTRACT ALLOWS THE OWNER TO MAKE PAYMENT WITHIN 45 DAYS AFTER SUBMISSION OF AN UNDISPUTED REQUEST FOR PAYMENT

NUMERIC SCALE CONFIRMATION

DRAWINGS ARE DEPICTED AT INTENDED NUMERIC SCALES IF THIS BAR EQUALS ONE INCH

STATE OF NEW MEXICO
JOHN QUINN PATE
NO. 1784
REGISTERED ARCHITECT
6/14/19

REV NO	REV DATE	DESCRIPTION

PROJECT NUMBER:	SFC182-11
DESIGNED BY:	JA
DRAWN BY:	IWS
CHECKED BY:	JQP
PRIME DESIGN PROFESSIONAL:	JOHN Q. PATE
PROJECT DATE:	JUNE 12, 2019

EXTERIOR ELEVATIONS

LA PUEBLA FIRE STATION ADDITION
SANTA FE COUNTY
LA PUEBLA, NEW MEXICO

A-201
SHEET

I:\SANTA FE COUNTY\SFC182-11 La Puebla Fire\DWGS\2019-05-28 ALP-BPxx-.rvt

6/14/2019 11:15:08 AM

© COPYRIGHT

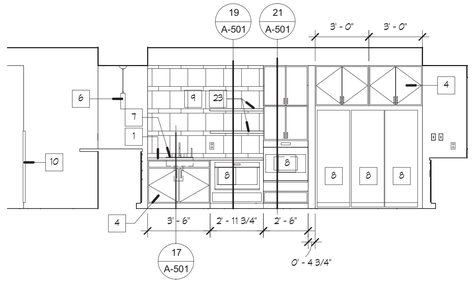

KITCHEN ELEVATION 5
Scale: 1/4" = 1'-0"

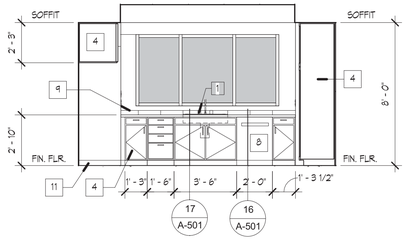

KITCHEN ELEVATION 4
Scale: 1/4" = 1'-0"

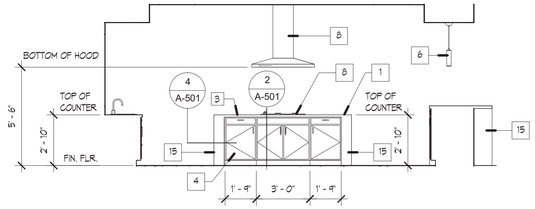

KITCHEN ELEVATION 3
Scale: 1/4" = 1'-0"

KEYED NOTES

1. PORCELAIN COUNTERTOP.
2. WARDROBE LOCKERS CASEWORK
3. PLASTIC LAMINATE COUNTERTOP
4. CUSTOM CASEWORK
5. FLOATING SHELF BRACKETS
6. LIGHT FIXTURE. TYPICAL.
7. PLUMBING FIXTURES, REFER TO PLUMBING DRAWINGS.
8. APPLIANCES. REFER TO DRAWING A-401.
9. TILING.
10. CORNER GUARDS
11. FLOOR BASE. REFER TO FINISH SCHEDULE
12. GYPSUM BOARD
13. PLASTIC LAMINATE
14. FIBERGLASS REINFORCED PANELS
15. PORCELAIN WATERFALL EDGE
16. PLASTIC LAMINATE SHELF AND ROD.
17. PLASTIC LAMINATE PLATFORM. REFER TO DETAIL 10/A-501
18. FURNITURE BY OWNER. NOT IN CONTRACT.
19. WALL MOUNTED TV OP01 PROVIDE BACKING
20. POWER AND DATA LOCATIONS. REFER TO ELECTRICAL DRAWINGS.
21. PROVIDE 3" CONDUIT CONNECTION FOR OWNER'S CONNECTIONS.
22. COMMERCIAL FAUCETS. REFER TO PLUMBING DRAWINGS.
23. FLOATING SHELVES. PLASTIC LAMINATE. REFER TO 19/A-501
24. WIRE GROMMETS AT COUNTERTOPS

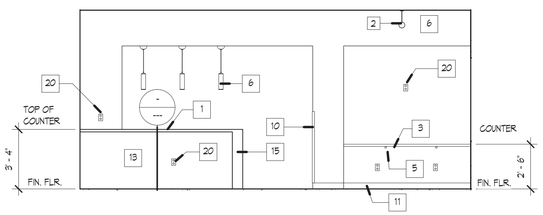

KITCHEN ELEVATION 10
Scale: 1/4" = 1'-0"

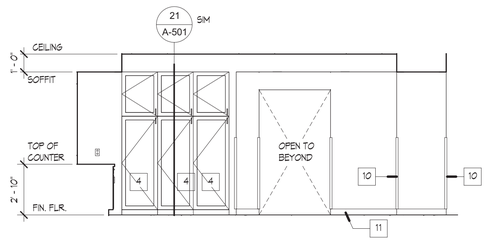

KITCHEN ELEVATION 8
Scale: 1/4" = 1'-0"

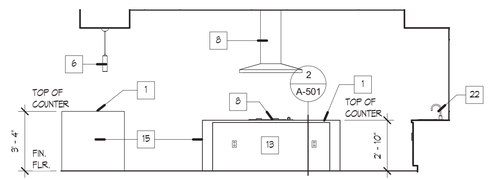

KITCHEN ELEVATION 7
Scale: 1/4" = 1'-0"

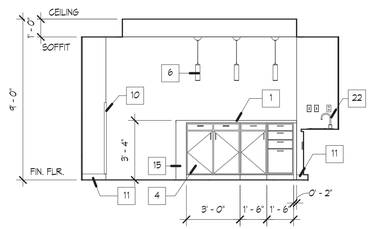

KITCHEN ELEVATION 6
Scale: 1/4" = 1'-0"

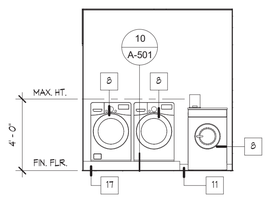

LAUNDRY RM ELEVATION 15
Scale: 1/4" = 1'-0"

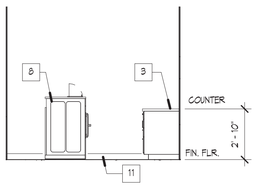

LAUNDRY RM ELEV 14
Scale: 1/4" = 1'-0"

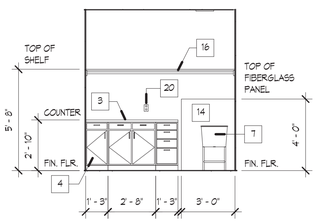

LAUNDRY RM ELEV 13
Scale: 1/4" = 1'-0"

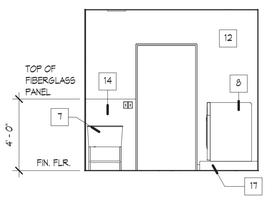

LAUNDRY RM ELEV 12
Scale: 1/4" = 1'-0"

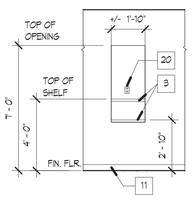

RADIO EQUIPMENT SHELF 11
Scale: 1/4" = 1'-0"

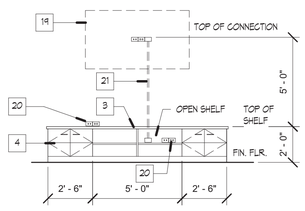

DAY ROOM 20
Scale: 1/4" = 1'-0"

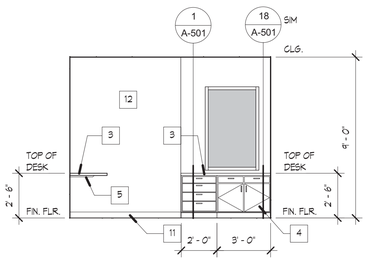

CONFERENCE ROOM 19
Scale: 1/4" = 1'-0"

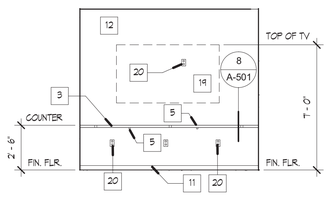

CONFERENCE ROOM 18
Scale: 1/4" = 1'-0"

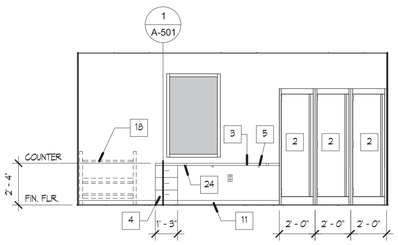

DORM CABINETRY 17
Scale: 1/4" = 1'-0"

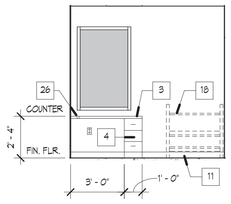

DORM CABINETRY 16
Scale: 1/4" = 1'-0"

MOLZENCORBIN

2701 Miles Road SE
Albuquerque, New Mexico 87106
505 242 5700 office
505 242 0673 fax
MolzenCorbin.com

NOTICE OF EXTENDED PAYMENT PROVISION:
THIS CONTRACT ALLOWS THE OWNER TO MAKE PAYMENT WITHIN 45 DAYS AFTER SUBMISSION OF AN UNDISPUTED REQUEST FOR PAYMENT

NUMERIC SCALE CONFIRMATION

DRAWINGS ARE DEPICTED AT INTENDED NUMERIC SCALES IF THIS BAR EQUALS ONE INCH

STATE OF NEW MEXICO
JOHN QUINN PATE
NO. 1784
REGISTERED ARCHITECT
6/12/19

REV NO	REV DATE	DESCRIPTION

PROJECT NUMBER: SFC182-11
DESIGNED BY: JSA
DRAWN BY: IWS
CHECKED BY: JQP
PRIME DESIGN PROFESSIONAL: JOHN Q. PATE
PROJECT DATE: JUNE 12, 2019

INTERIOR ELEVATIONS

LA PUEBLA FIRE STATION ADDITION
SANTA FE COUNTY
LA PUEBLA, NEW MEXICO

A-210
SHEET

© COPYRIGHT

I:\SANTA FE COUNTY\SFC182-11 La Puebla Fire\DWGS\2019-05-28 ALP-BPxx-.rvt
6/14/2019 11:15:12 AM

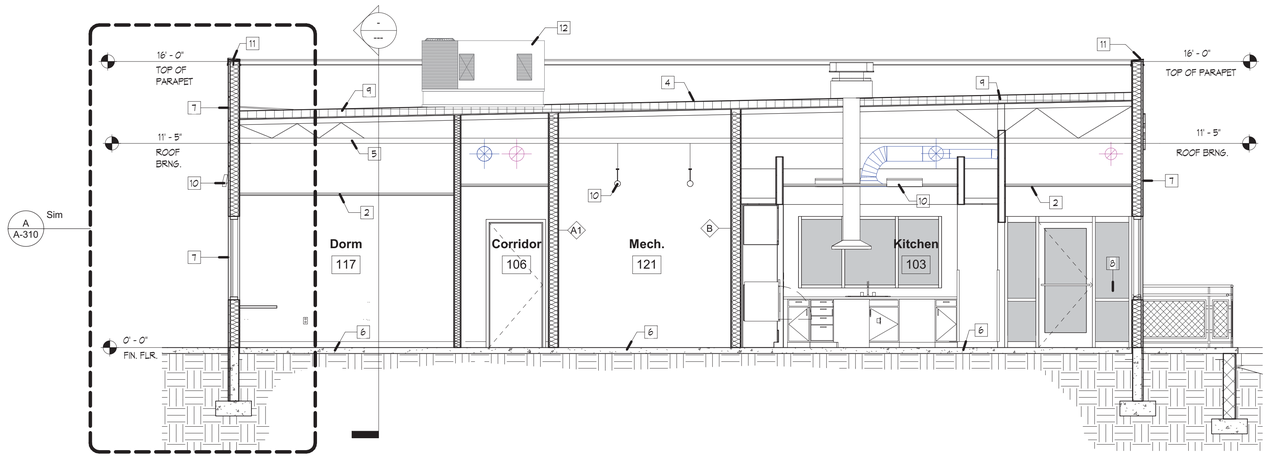

BUILDING SECTION 1

Scale: 1/4" = 1'-0"

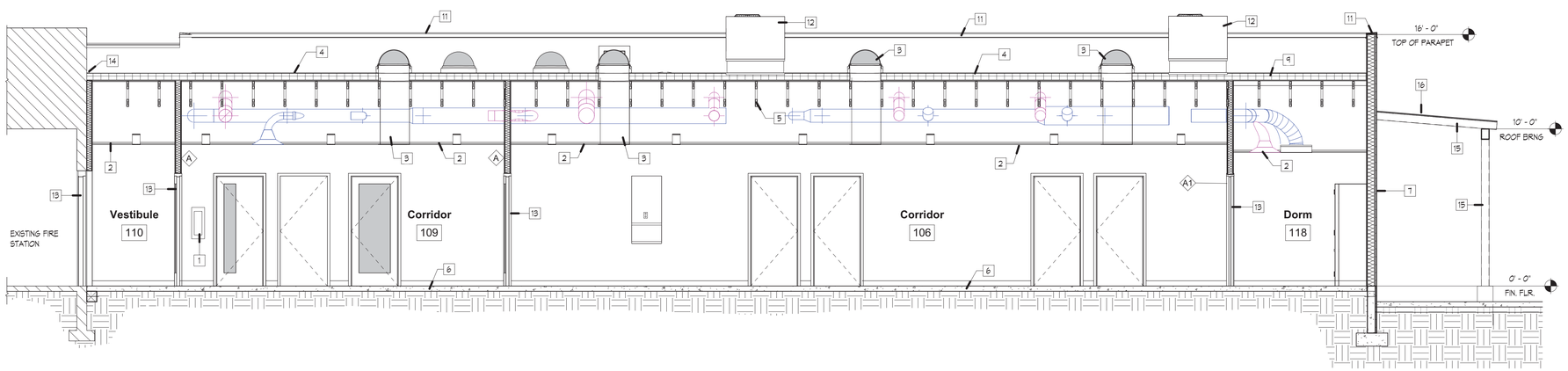

BUILDING SECTION 2

Scale: 1/4" = 1'-0"

KEYED NOTES

1. RECESSED FIRE EXTINGUISHER CABINET
2. ACOUSTICAL CEILINGS
3. TUBULAR DAYLIGHTING DEVICE-SKYLIGHT, TYP.
4. THERMOPLASTIC OLEFIN ROOFING SYSTEM
5. STRUCTURAL WOOD TRUSSES. REFER TO STRUCTURAL DRAWINGS
6. CONCRETE SLAB - REFER TO SHEET S-101.
7. EXTERIOR INSULATION AND FINISH SYSTEMS
8. METAL RAILINGS
9. ROOF AND DECK INSULATION
10. LIGHT FIXTURE, TYP
11. METAL COPING
12. ROOF TOP UNIT. REFER TO MECHANCAL SHEET M-101
13. DOOR AS SCHEDULED
14. EXPANSION JOINT COVER ASSEMBLIES
15. STRUCTURAL STEEL FRAMING
16. SHEET METAL ROOFING

MOLZENCORBIN

2701 Miles Road SE
Albuquerque, New Mexico 87106
505 242 5700 office
505 242 0673 fax
MolzenCorbin.com

NOTICE OF EXTENDED PAYMENT PROVISION:
THIS CONTRACT ALLOWS THE OWNER TO MAKE PAYMENT WITHIN 45 DAYS AFTER SUBMISSION OF AN UNDISPUTED REQUEST FOR PAYMENT

NUMERIC SCALE CONFIRMATION

DRAWINGS ARE DEPICTED AT INTENDED NUMERIC SCALES IF THIS BAR EQUALS ONE INCH

STATE OF NEW MEXICO
JOHN QUINN PATE
NO. 1784
REGISTERED ARCHITECT
6/12/19

REV NO	REV DATE	DESCRIPTION

PROJECT NUMBER:	SFC182-11
DESIGNED BY:	JSA
DRAWN BY:	IWS
CHECKED BY:	JQP
PRIME DESIGN PROFESSIONAL:	JOHN Q. PATE
PROJECT DATE:	JUNE 12, 2019

BUILDING SECTIONS

LA PUEBLA FIRE STATION ADDITION
SANTA FE COUNTY
LA PUEBLA, NEW MEXICO

A-301
SHEET

I:\SANTA FE COUNTY\SFC182-11 La Puebla Fire\DWGS\2019-05-28 ALP-BPxx-.rvt

6/14/2019 11:15:15 AM

© COPYRIGHT

KEYED NOTES

1. 5/8" TYPE "X" GYPSUM WALLBOARD
2. ACOUSTICAL CEILINGS
3. SHOP-FABRICATED STRUCTURAL WOOD
4. EXTERIOR INSULATION AND FINISH SYSTEMS
5. LIGHT FIXTURE, TYP
6. PLASTIC LAMINTATE COUNTERTOP
7. FLOOR BASE. REFER TO FINISH SCHEDULE
8. FLOOR FINISH. REFER TO FINISH SCHEDULE
9. THERMOPLASTIC OLEFIN ROOFING SYSTEM
10. RECOVERY BOARD
11. ROOF AND DECK INSULATION
12. METAL COPING
13. SHOP FABRICATED STRUCTURAL WOOD JOISTS. REFER TO SHEET S-101
14. SHEATHING
15. SUSPENSION WIRE
16. WOOD FRAMING
17. THERMAL INSULATION
18. ACOUSTICAL INSULATION - MIN. 3" SOUND ATTENUATION BATT TO 4" ABOVE CEILING. BATT THICKNESS SHALL MATCH STUD DEPTH
19. ALUMINUM CHANNEL REVEALS
20. FLOATING SHELF BRACKETS

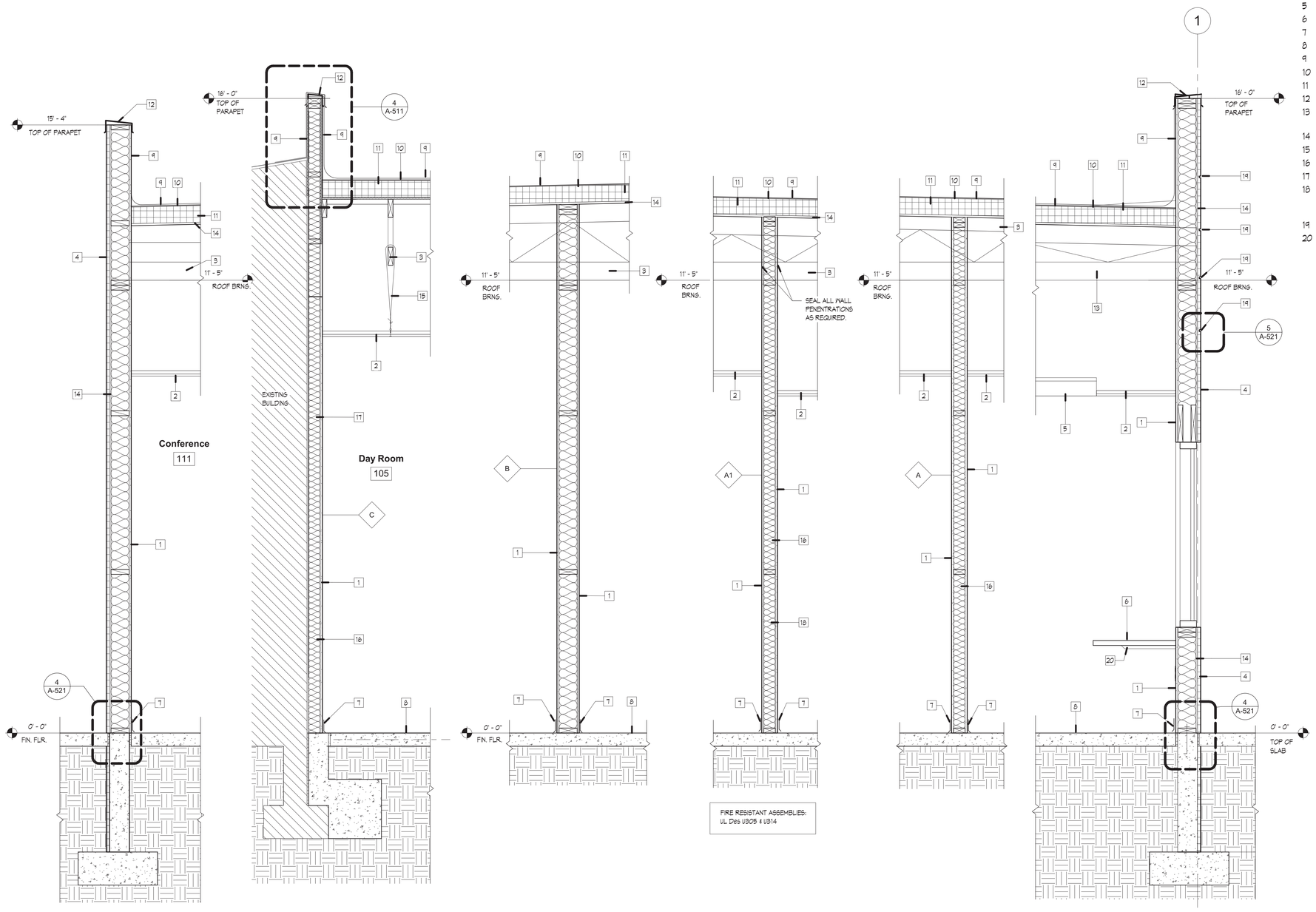

WALL SECTION F
Scale: 3/4" = 1'-0"

WALL TYPE C E
Scale: 3/4" = 1'-0"

WALL TYPE B D
Scale: 3/4" = 1'-0"

WALL TYPE A1 C
Scale: 3/4" = 1'-0"

WALL TYPE A B
Scale: 3/4" = 1'-0"

WALL SECTION A
Scale: 3/4" = 1'-0"

MOLZENCORBIN
2701 Miles Road SE
Albuquerque, New Mexico 87106
505 242 5700 office
505 242 0673 fax
MolzenCorbin.com

NOTICE OF EXTENDED PAYMENT PROVISION:
THIS CONTRACT ALLOWS THE OWNER TO MAKE PAYMENT WITHIN 45 DAYS AFTER SUBMISSION OF AN UNDISPUTED REQUEST FOR PAYMENT

NUMERIC SCALE CONFIRMATION
DRAWINGS ARE DEPICTED AT INTENDED NUMERIC SCALES IF THIS BAR EQUALS ONE INCH

STATE OF NEW MEXICO
JOHN QUINN PATE
NO. 1784
REGISTERED ARCHITECT
6/12/19

REV NO	REV DATE	DESCRIPTION

PROJECT NUMBER: SFC182-11
DESIGNED BY: JSA
DRAWN BY: IWS
CHECKED BY: JQP
PRIME DESIGN PROFESSIONAL: JOHN Q. PATE
PROJECT DATE: JUNE 12, 2019

WALL SECTIONS

LA PUEBLA FIRE STATION ADDITION
SANTA FE COUNTY
LA PUEBLA, NEW MEXICO

A-310
SHEET

© COPYRIGHT

I:\SANTA FE COUNTY\SFC182-11 La Puebla Fire\DWGS\2019-05-28 ALP-BPxx.rvt
6/14/2019 11:15:17 AM

KITCHEN EQUIPMENT AND APPLIANCE SCHEDULE

MARK	DESCRIPTION	MANUFACTURE / MODEL	NOTES	LOCATION
HV	Hood Vent	GE/ PV977NSS	ISLAND HOOD VENT	KITCHEN
RF	Refrigerator	GLE12HSLSS		
RF	Refrigerator	GLE12HSLSS		
RF	Refrigerator	GLE12HSLSS		
WO	Built-in Single Oven	PTS7000SNSS		
MW	Microwave Oven	PEB9159SJSS		KITCHEN
DW	Dishwasher	GE / GDT226SSLSS		
CT	Gas Cooktop	GE/ PGP9036SLSS	GAS COOKTOP	Appliance shall have propane conversion install to unit.
GD	Garbage Disposal	GE / GFC520V	VERIFY WITH PLUMBING AND ELECTRICAL	
EXT	Extractor	UCT020NN-UNIMAC	LAUNDRY WASHER	HARDMOUNT WASHER EXTRACTOR
WSH	Front Load Washer	GE / GFW450SSMWW		
DYR	Front Load Dryer	GE / GFD45ESSMWW	ELECTRIC DRYER	

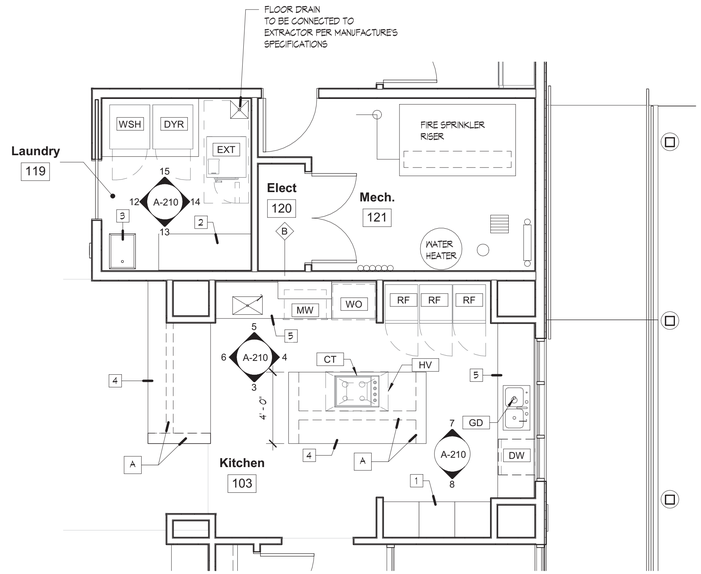

KITCHEN AND LAUNDRY ROOM PLAN (1)

Scale: 1/4" = 1'-0"

0 2'-0" 4'-0" 8'-0"
SCALE: 1/4" = 1'-0"

KEYED NOTES

1. CASEWORK TYP.
2. PLASTIC LAMINTATE COUNTERTOP
3. UTILITY SINK
4. PORCELAIN COUNTERTOP WITH WATERFALL EDGE
5. PORCELAIN COUNTERTOP

A. 2X FRAMING BELOW COUNTERTOP. REFER TO SHEET A-501 FOR DETAIL SECTIONS.

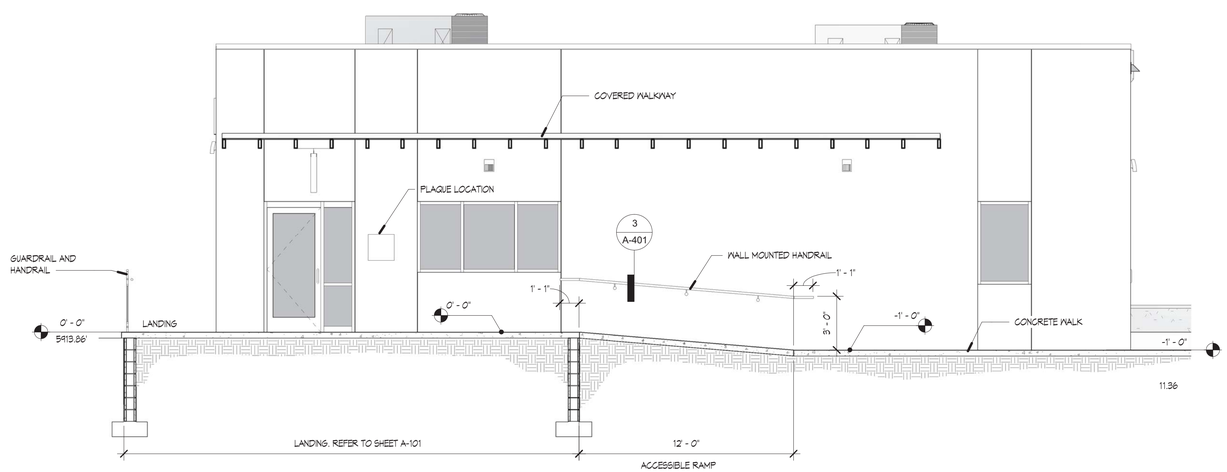

RAMP SECTION (2)

Scale: 1/4" = 1'-0"

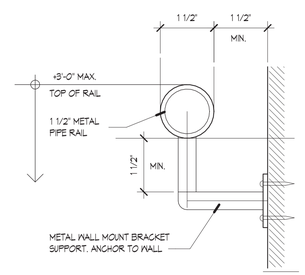

WALL MOUNT HANDRAIL DETAIL (3)

Scale: 6" = 1'-0"

MOLZENCORBIN
2701 Miles Road SE
Albuquerque, New Mexico 87106
505 242 5700 office
505 242 0673 fax
MolzenCorbin.com

NOTICE OF EXTENDED PAYMENT PROVISION:
THIS CONTRACT ALLOWS THE OWNER TO MAKE PAYMENT WITHIN 45 DAYS AFTER SUBMISSION OF AN UNDISPUTED REQUEST FOR PAYMENT

NUMERIC SCALE CONFIRMATION

DRAWINGS ARE DEPICTED AT INTENDED NUMERIC SCALES IF THIS BAR EQUALS ONE INCH

STATE OF NEW MEXICO
JOHN QUINN PATE
NO. 1784
REGISTERED ARCHITECT
6/14/19

REV NO	REV DATE	DESCRIPTION

PROJECT NUMBER: SFC182-11
DESIGNED BY: Designer
DRAWN BY: Author
CHECKED BY: Checker
PRIME DESIGN PROFESSIONAL: Approver
PROJECT DATE: JUNE 12, 2019

ENLARGED KITCHEN PLAN & SCHEDULE

LA PUEBLA FIRE STATION ADDITION
SANTA FE COUNTY
LA PUEBLA, NEW MEXICO

A-401
SHEET

I:\SANTA FE COUNTY\SFC182-11 La Puebla Fire\DWGS\2019-05-28 ALP-BPxx.rvt
6/14/2019 11:15:25 AM
© COPYRIGHT

NOTE:
CONTROLS ARE REQUIRED TO BE LOCATED ON CONTROL WALL. THE HORIZONTAL PLACEMENT MUST BE WITHIN 15" OF THE CENTER LINE OF THE SEAT LOCATED ON THE OPPOSING WALL

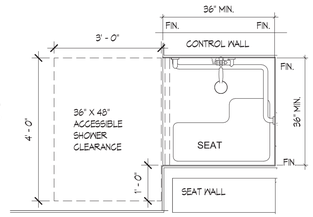

PLAN

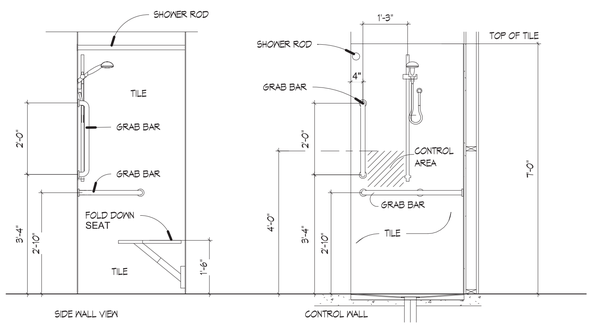

ELEVATION

TYPICAL ACCESSIBLE SHOWER (E)

Scale: 1/2" = 1'-0"

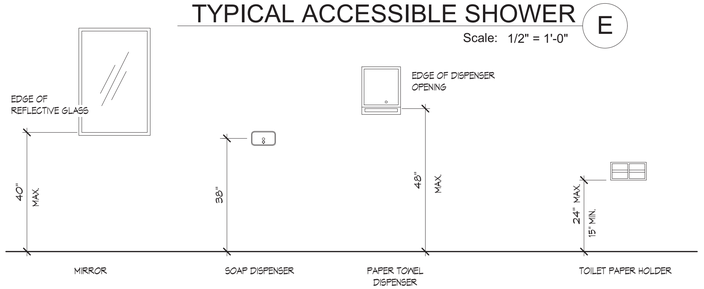

TYPICAL TOILET ACCESSORIES MOUNTING HEIGHTS

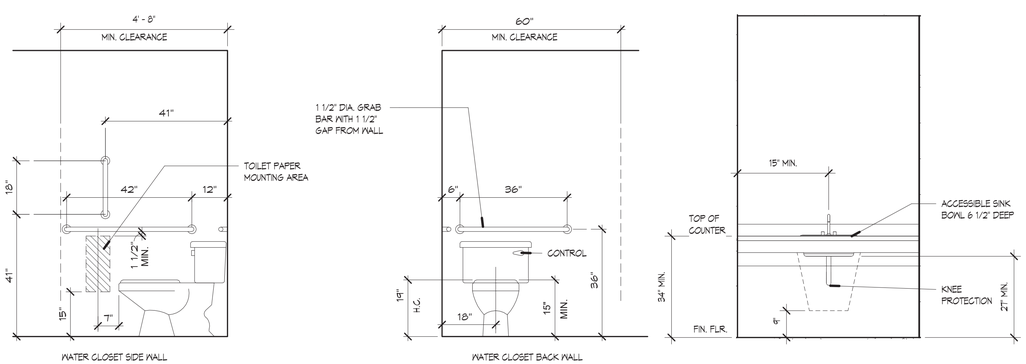

TYPICAL PLUMBING FIXTURES AND ACCESSORIES MOUNTING HEIGHTS

KEYED NOTES

1 WATER CLOSET
2 42" GRAB BAR (GB)
3 GRAB BAR
4 TOILET TISSUE DISPENSER (TTD)
5 PAPER TOWEL DISPENSER (TD)
6 COUNTERTOP
7 2X4 FRAMING @ 16" O.C.
8 LIGHT FIXTURE, TYP
9 LAVATORY
10 FOLDING SHOWER SEAT (SEAT)
11 TWO WALL SHOWER GRAB BAR (GB-1)
12 CERAMIC COUNTERTOP
13 18" VERTICAL GRAB BAR (GB)
14 GFCI RECEPTACLE
15 SOAP DISPENSER (SD)
16 COAT HOOK (HOOKS)

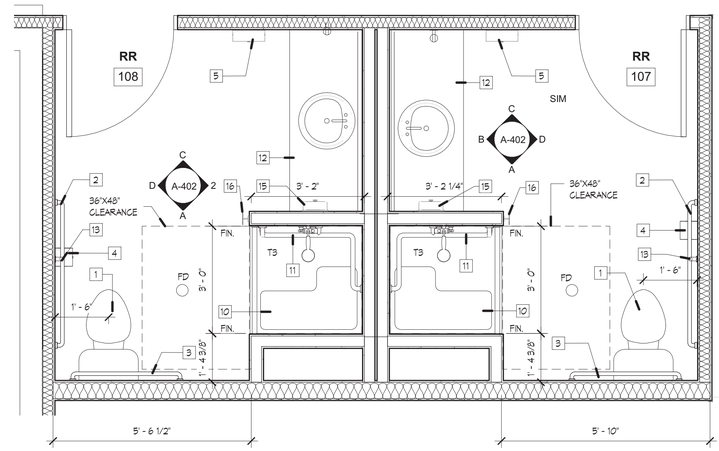

1 MEN AND WOMEN LAVATORY PLAN

Scale: 1/2" = 1'-0"

0 1'-0" 2'-0" 4'-0"
SCALE: 1/2" = 1'-0"

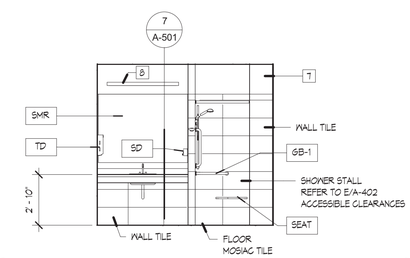

B LAVATORY ELEV

Scale: 1/4" = 1'-0"

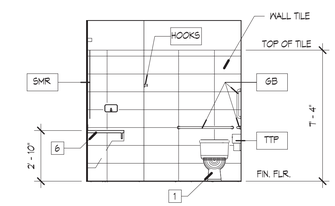

A LAVATORY ELEV

Scale: 1/4" = 1'-0"

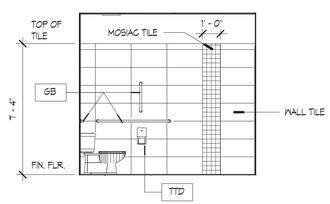

D LAVATORY ELEV

Scale: 1/4" = 1'-0"

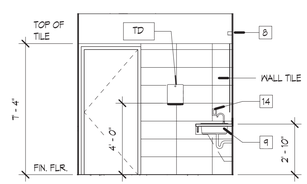

C LAVATORY ELEV

Scale: 1/4" = 1'-0"

TOILET ACCESSORIES SCHEDULE					
Mark	Description	Notes	Basis of Design Model #	Room...	Mounting
TD	Towel Dispenser	Manual Dispensing	Owner Provide, contactor to install	108 / 107	Surface
SD	Soap Dispenser		Owner Provide, contractor to install	*	Surface
TTD	Toilet Tissue Dispenser		Owner Provide, contractor to install	*	Surface
GB	Grab Bar	Refer to specifications	Bobrick B-6806.99	*	Surface
SMR	Mirror	Refer to specifications		*	Surface
Hooks	Hooks		Brobrick B 224-36	*	Surface
GB-1	Grab Bar				
SEAT	Folding Shower Seat				
REFER TO SHEET THIS SHEET FOR MOUNTING HEIGHT AND LOCATION REQUIREMENTS AND REFER TO PLUMBING SCHEDULES					

MOLZENCORBIN
2701 Miles Road SE
Albuquerque, New Mexico 87106
505 242 5700 office
505 242 0673 fax
MolzenCorbin.com

NOTICE OF EXTENDED PAYMENT PROVISION:
THIS CONTRACT ALLOWS THE OWNER TO MAKE PAYMENT WITHIN 45 DAYS AFTER SUBMISSION OF AN UNDISPUTED REQUEST FOR PAYMENT

NUMERIC SCALE CONFIRMATION

DRAWINGS ARE DEPICTED AT INTENDED NUMERIC SCALES IF THIS BAR EQUALS ONE INCH

STATE OF NEW MEXICO
JOHN QUINN PATE
NO. 1784
REGISTERED ARCHITECT
6/12/19

REV NO	REV DATE	DESCRIPTION

PROJECT NUMBER:	SFC182-11
DESIGNED BY:	JSA
DRAWN BY:	IWS
CHECKED BY:	JQP
PRIME DESIGN PROFESSIONAL:	JOHN Q. PATE
PROJECT DATE:	JUNE 12, 2019

ENLARGED LAVATORY PLAN, ELEVATIONS, & SCHEDULES

LA PUEBLA FIRE STATION ADDITION
SANTA FE COUNTY
LA PUEBLA, NEW MEXICO

A-402
SHEET

© COPYRIGHT

I:\SANTA FE COUNTY\SFC182-11 La Puebla Fire\DWGS\2019-05-28 ALP-BPxx.rvt
6/14/2019 11:15:29 AM

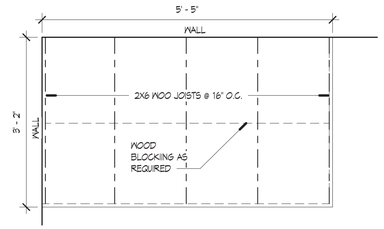

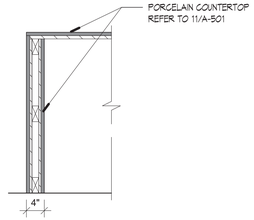

MISC-WATERFALL EDGE 4
Scale: 3/4" = 1'-0"

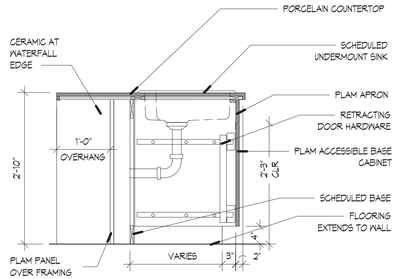

ISLAND KITCHEN SINK 3
Scale: 3/4" = 1'-0"

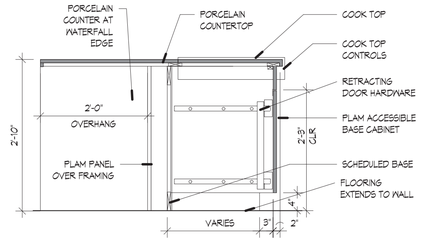

ISLAND KIT COOKTOP 2
Scale: 3/4" = 1'-0"

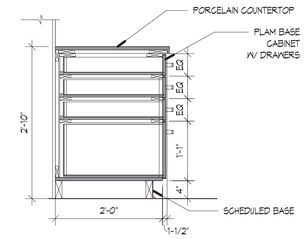

BASE CABINET DRAWERS 1
Scale: 3/4" = 1'-0"

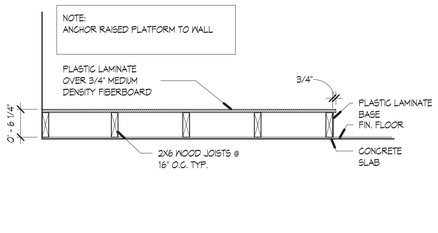

LAUNDRY ROOM PLATFORM 10
Scale: 3/4" = 1'-0"

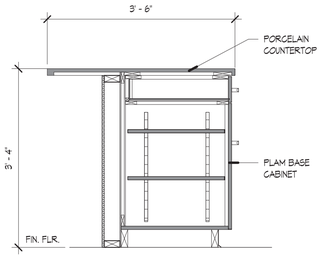

PENISULA CABINET 9
Scale: 3/4" = 1'-0"

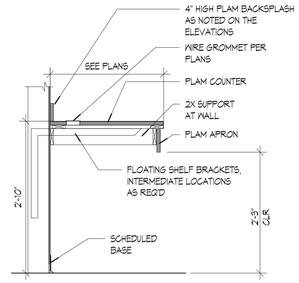

COUNTERTOP- FLOATING 8
Scale: 3/4" = 1'-0"

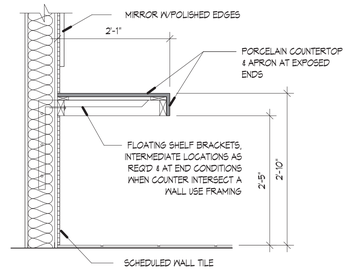

COUNTERTOP-VANITY 7
Scale: 3/4" = 1'-0"

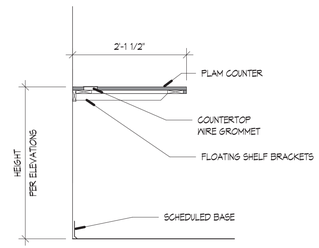

COUNTERTOP-DESKTOP 6
Scale: 3/4" = 1'-0"

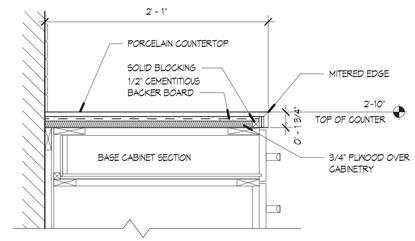

COUNTERTOP DETAIL / EDGE 11
Scale:1 1/2" = 1'-0"

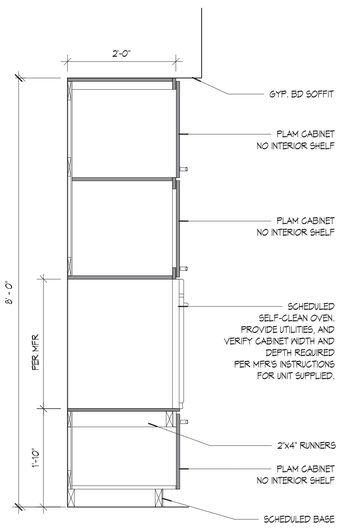

WALL CAB WO CABINET 21
Scale: 3/4" = 1'-0"

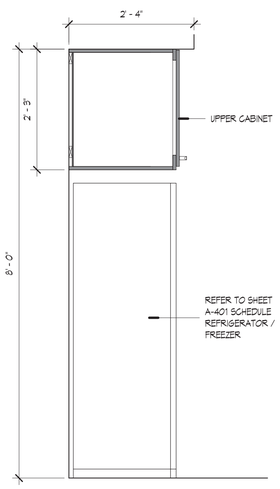

CABINET SECTION 20
Scale: 3/4" = 1'-0"

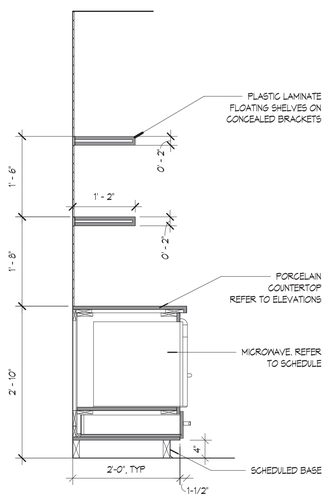

BASE W/ MICROWAVE 19
Scale: 3/4" = 1'-0"

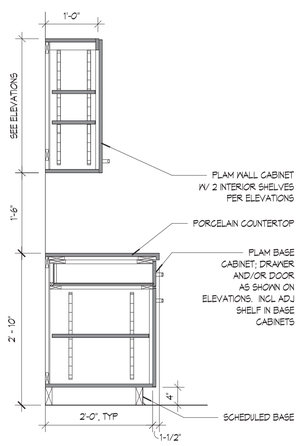

BASE-UPPER TYP. 18
Scale: 3/4" = 1'-0"

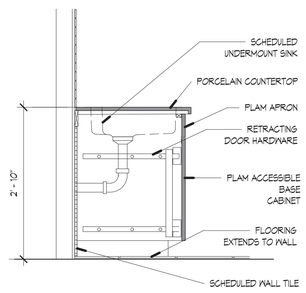

BASE SINK CAB. 17
Scale: 3/4" = 1'-0"

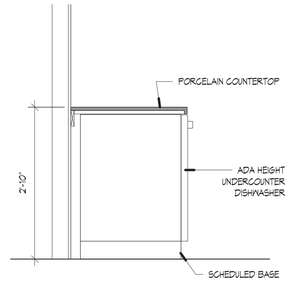

BASE DW COUNTERTOP W/ UPPER 16
Scale: 3/4" = 1'-0"

MOLZENCORBIN
2701 Miles Road SE
Albuquerque, New Mexico 87106
505 242 5700 office
505 242 0673 fax
MolzenCorbin.com

NOTICE OF EXTENDED PAYMENT PROVISION:
THIS CONTRACT ALLOWS THE OWNER TO MAKE PAYMENT WITHIN 45 DAYS AFTER SUBMISSION OF AN UNDISPUTED REQUEST FOR PAYMENT

NUMERIC SCALE CONFIRMATION
DRAWINGS ARE DEPICTED AT INTENDED NUMERIC SCALES IF THIS BAR EQUALS ONE INCH

STATE OF NEW MEXICO
JOHN QUINN PATE
NO. 1784
REGISTERED ARCHITECT
6/12/19

REV NO	REV DATE	DESCRIPTION

PROJECT NUMBER:	SFC182-11
DESIGNED BY:	Designer
DRAWN BY:	Author
CHECKED BY:	Checker
PRIME DESIGN PROFESSIONAL:	Approver
PROJECT DATE:	JUNE 12, 2019

CASEWORK DETAILS

LA PUEBLA FIRE STATION ADDITION
SANTA FE COUNTY
LA PUEBLA, NEW MEXICO

A-501
SHEET

I:\SANTA FE COUNTY\SFC182-11 La Puebla Fire\DWGS\2019-05-28 ALP-BPxx-.rvt
6/14/2019 11:15:30 AM

© COPYRIGHT

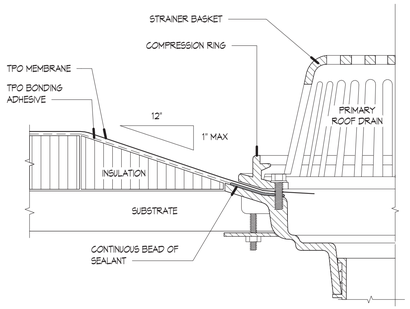

ROOF DRAIN (5)
Scale: 3" = 1'-0"

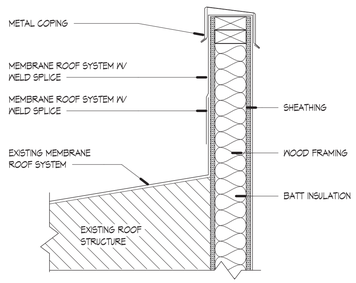

ROOF ATTACHMENT (4)
Scale:1 1/2" = 1'-0"

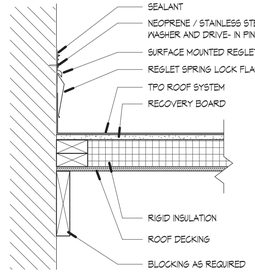

REGLET DETAIL (3)
Scale:1 1/2" = 1'-0"

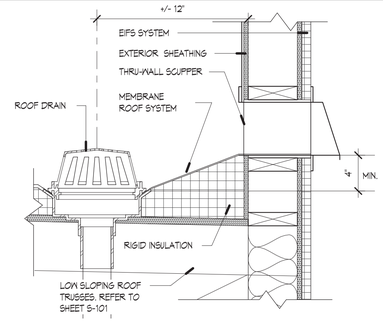

OVERFLOW SCUPPER (2)
Scale:1 1/2" = 1'-0"

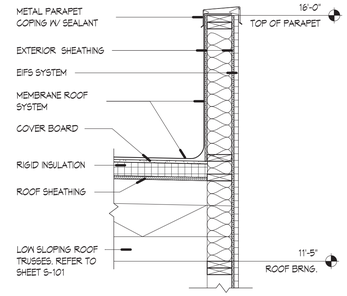

TYPICAL ROOF PARAPET (1)
Scale: 3/4" = 1'-0"

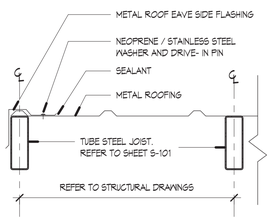

SIDE EAVE ROOF (10)
Scale:1 1/2" = 1'-0"

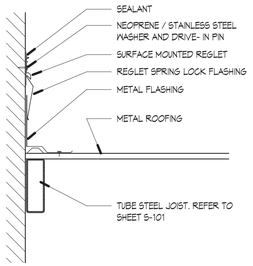

ENTRY CANOPY SECTION (9)
Scale:1 1/2" = 1'-0"

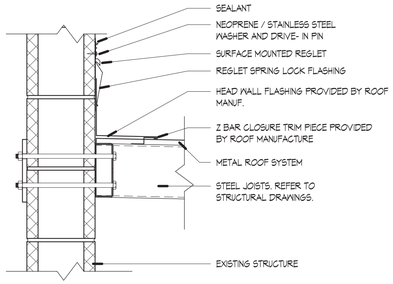

FLASHING DETAIL (8)
Scale:1 1/2" = 1'-0"

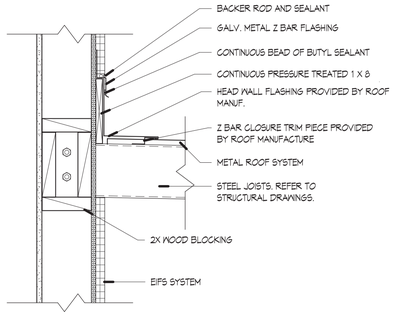

PORTAL FLASHING DETAIL (7)
Scale:1 1/2" = 1'-0"

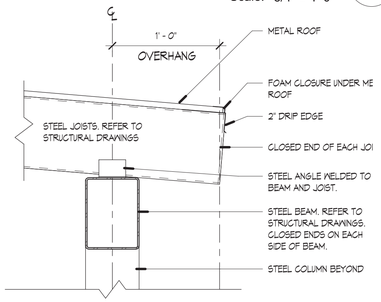

STEEL BEAM CANOPY SECTION (6)
Scale:1 1/2" = 1'-0"

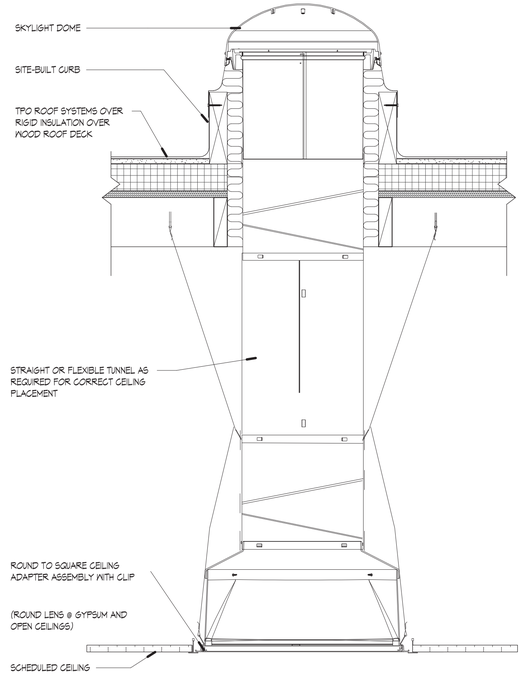

SKYLIGHT (17)
Scale: 1 1/2" = 1'-0"

MOLZENCORBIN
2701 Miles Road SE
Albuquerque, New Mexico 87106
505 242 5700 office
505 242 0673 fax
MolzenCorbin.com

NOTICE OF EXTENDED PAYMENT PROVISION:
THIS CONTRACT ALLOWS THE OWNER TO MAKE PAYMENT WITHIN 45 DAYS AFTER SUBMISSION OF AN UNDISPUTED REQUEST FOR PAYMENT

NUMERIC SCALE CONFIRMATION

DRAWINGS ARE DEPICTED AT INTENDED NUMERIC SCALES IF THIS BAR EQUALS ONE INCH

STATE OF NEW MEXICO
JOHN QUINN PATE
NO. 1784
REGISTERED ARCHITECT
6/12/19

REV NO	REV DATE	DESCRIPTION

PROJECT NUMBER:	SFC182-11
DESIGNED BY:	JSA
DRAWN BY:	IWS
CHECKED BY:	JQP
PRIME DESIGN PROFESSIONAL:	JOHN Q. PATE
PROJECT DATE:	JUNE 12, 2019

ROOF DETAILS

LA PUEBLA FIRE STATION ADDITION
SANTA FE COUNTY
LA PUEBLA, NEW MEXICO

A-511
SHEET

I:\SANTA FE COUNTY\SFC182-11 La Puebla Fire\DWGS\2019-05-28 ALP-BPxx-.rvt

6/14/2019 11:15:32 AM

© COPYRIGHT

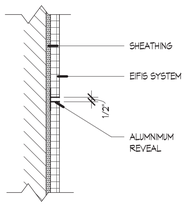

EIFS REVEAL DETAIL 5
Scale:1 1/2" = 1'-0"

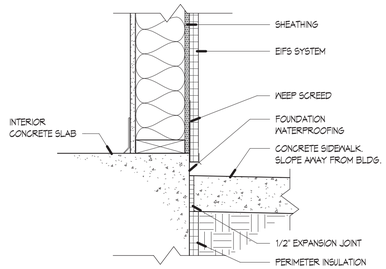

EIFS AND SIDEWALK DETAIL 4
Scale:1 1/2" = 1'-0"

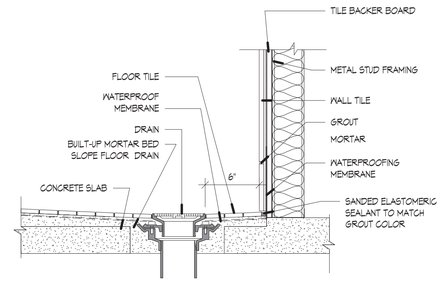

SHOWER DRAIN 3
Scale:1 1/2" = 1'-0"

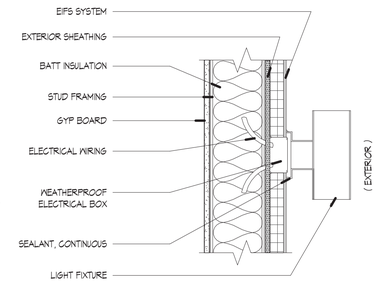

WALL FIXTURE 2
Scale:1 1/2" = 1'-0"

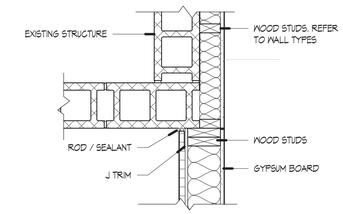

WALL CORNER DETAIL 1
Scale: 1" = 1'-0"

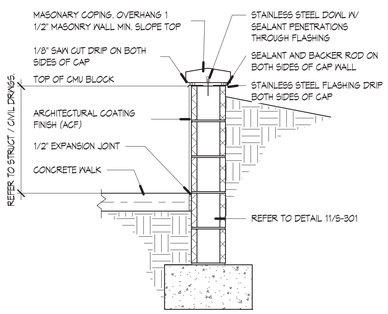

RETAINING WALL DETAIL 10
Scale: 3/4" = 1'-0"

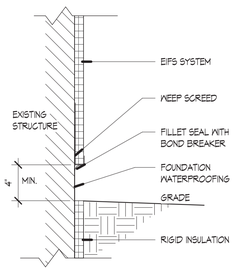

EIFS AND GRADE DETAIL 9
Scale:1 1/2" = 1'-0"

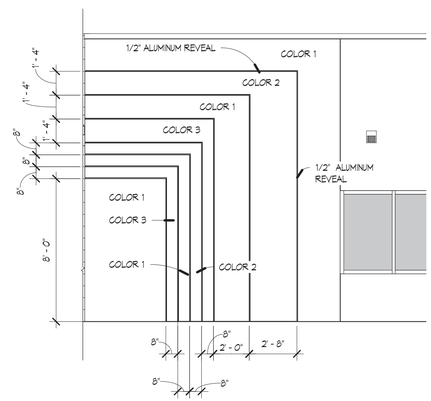

STUCCO REVEAL AND COLOR CORRDINATION 12
Scale: 1/4" = 1'-0"

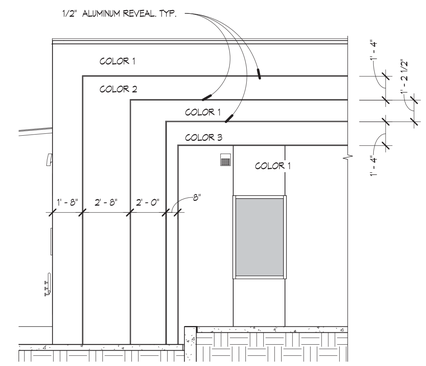

STUCCO REVEAL AND COLOR CORRDINATION 11
Scale: 1/4" = 1'-0"

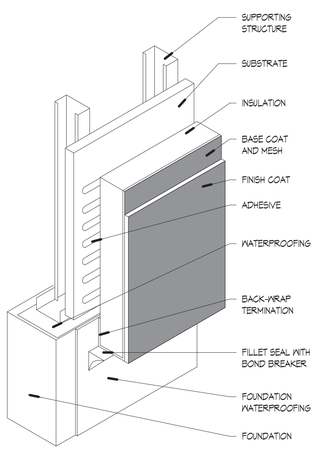

TERMINATION AT GRADE

EIFS TERMINATION AT GRADE 20
Scale:1 1/2" = 1'-0"

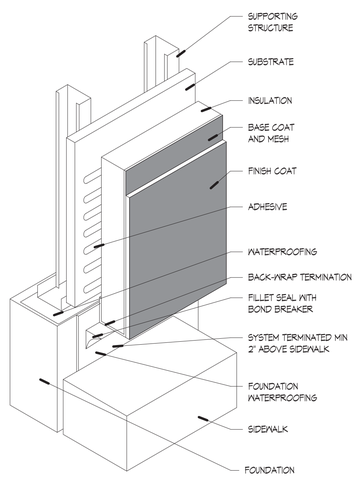

TERMINATION AT SIDEWALK

EIFS TERMINATION AT SIDEWALK 19
Scale:1 1/2" = 1'-0"

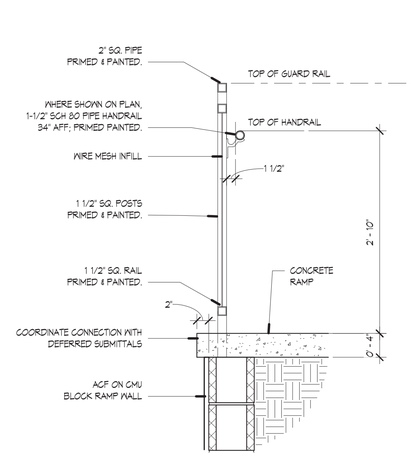

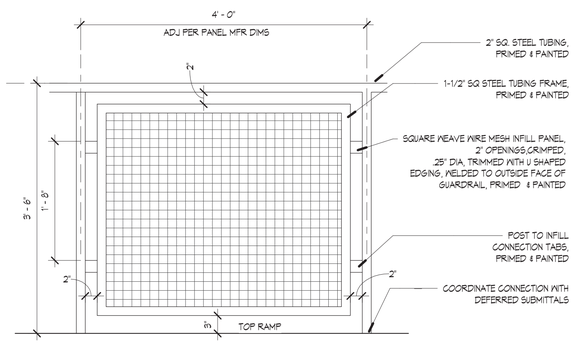

GUARDWALL DETAIL 18
Scale: 1" = 1'-0"

MOLZENCORBIN
2701 Miles Road SE
Albuquerque, New Mexico 87106
505 242 5700 office
505 242 0673 fax
MolzenCorbin.com

NOTICE OF EXTENDED PAYMENT PROVISION:
THIS CONTRACT ALLOWS THE OWNER TO MAKE PAYMENT WITHIN 45 DAYS AFTER SUBMISSION OF AN UNDISPUTED REQUEST FOR PAYMENT

NUMERIC SCALE CONFIRMATION
DRAWINGS ARE DEPICTED AT INTENDED NUMERIC SCALES IF THIS BAR EQUALS ONE INCH

STATE OF NEW MEXICO
JOHN QUINN PATE
NO. 1784
REGISTERED ARCHITECT
6/12/19

REV NO	REV DATE	DESCRIPTION

PROJECT NUMBER: SFC182-11
DESIGNED BY: JSA
DRAWN BY: IWS
CHECKED BY: JQP
PRIME DESIGN PROFESSIONAL: JOHN Q. PATE
PROJECT DATE: JUNE 12, 2019

WALL DETAILS

LA PUEBLA FIRE STATION ADDITION
SANTA FE COUNTY
LA PUEBLA, NEW MEXICO

A-521
SHEET

© COPYRIGHT

I:\SANTA FE COUNTY\SFC182-11 La Puebla Fire\DWGS\2019-05-28 ALP-BPxx.rvt
6/14/2019 11:15:34 AM

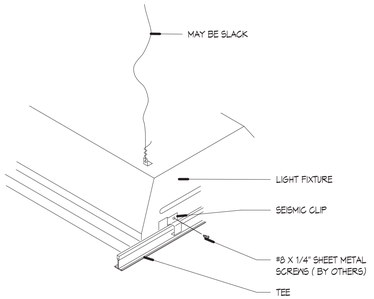

TYPE G LIGHT FIXTURE 5
Scale: N.T.S.

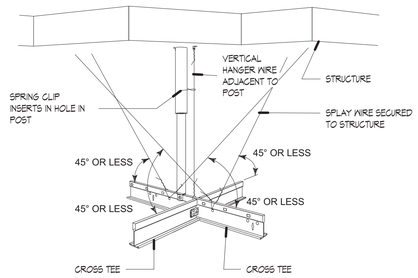

CAT D LATERAL BRACING 4
Scale: N.T.S.

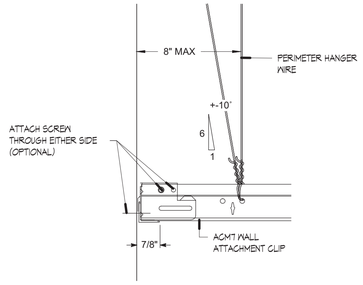

CAT D PERIMETER DETAIL 3
Scale: N.T.S.

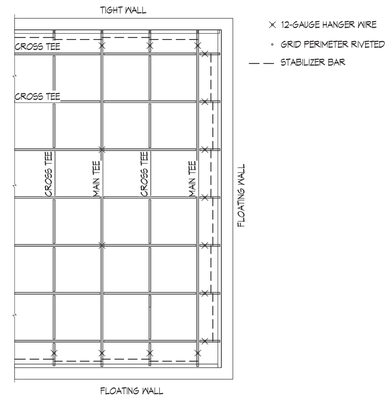

CAT D-F STANDARD CLG. LAYOUT 1
Scale: N.T.S.

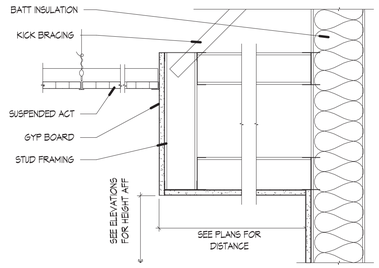

GYP. BOARD SOFFIT 10
Scale: N.T.S.

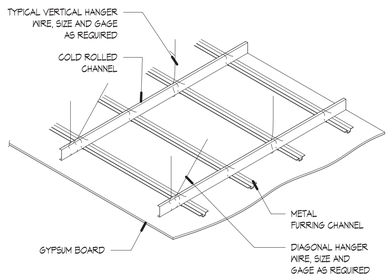

GYP. BD. BRACING 9
Scale: N.T.S.

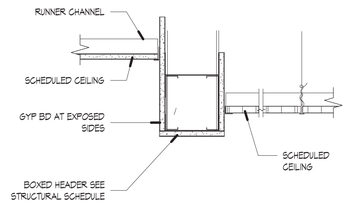

GYP. BOARD HDR. 8
Scale:1 1/2" = 1'-0"

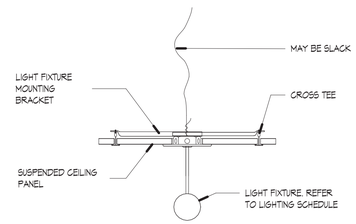

PENDANT LIGHT FIXTURE 7
Scale: N.T.S.

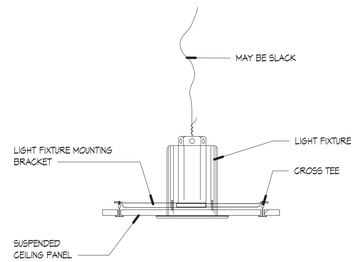

CAN LIGHT FIXTURE 6
Scale: N.T.S.

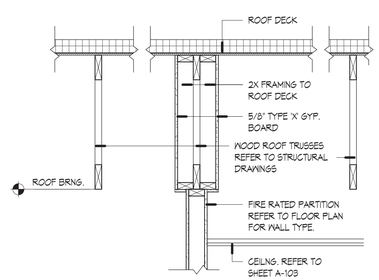

FIRE RATED PARTITION TO ROOF TRUSS 12
Scale: 3/4" = 1'-0"

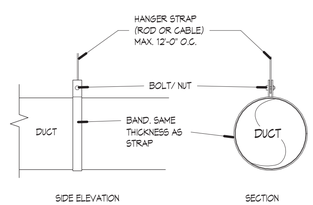

EXPOSED DUCT CONNECTION 11
Scale: N.T.S.

MOLZENCORBIN
2701 Miles Road SE
Albuquerque, New Mexico 87106
505 242 5700 office
505 242 0673 fax
MolzenCorbin.com

NOTICE OF EXTENDED PAYMENT PROVISION:
THIS CONTRACT ALLOWS THE OWNER TO MAKE PAYMENT WITHIN 45 DAYS AFTER SUBMISSION OF AN UNDISPUTED REQUEST FOR PAYMENT

NUMERIC SCALE CONFIRMATION

DRAWINGS ARE DEPICTED AT INTENDED NUMERIC SCALES IF THIS BAR EQUALS ONE INCH

STATE OF NEW MEXICO
JOHN QUINN PATE
NO. 1784
REGISTERED ARCHITECT
6/12/19

REV NO	REV DATE	DESCRIPTION

PROJECT NUMBER: SFC182-11
DESIGNED BY: JSA
DRAWN BY: IWS
CHECKED BY: JQP
PRIME DESIGN PROFESSIONAL: JOHN Q. PATE
PROJECT DATE: JUNE 12, 2019

CEILING AND PLAN DETAILS

LA PUEBLA FIRE STATION ADDITION
SANTA FE COUNTY
LA PUEBLA, NEW MEXICO

A-531
SHEET

© COPYRIGHT

I:\SANTA FE COUNTY\SFC182-11 La Puebla Fire\DWGS\2019-05-28 ALP-BP\x-.rvt
6/14/2019 11:15:36 AM

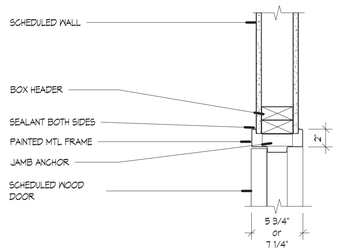

5 DOOR HEAD
Scale: 1 1/2" = 1'-0"

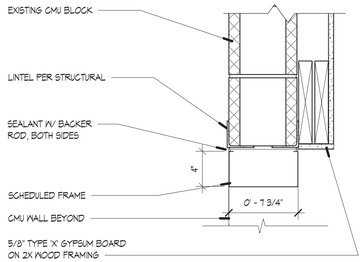

4 MASONRY-FRAME HEAD
Scale: 1 1/2" = 1'-0"

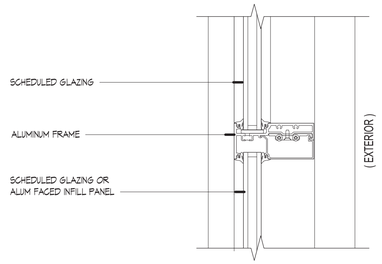

3 HORIZONTAL MULLION
Scale: 3" = 1'-0"

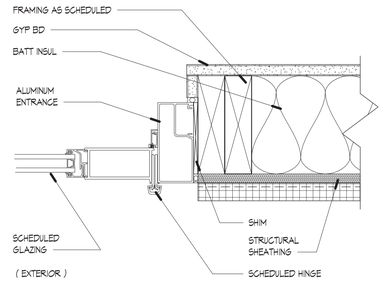

2 DOOR JAMB
Scale: 3" = 1'-0"

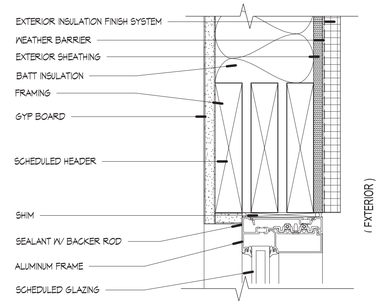

1 HEAD
Scale: 3" = 1'-0"

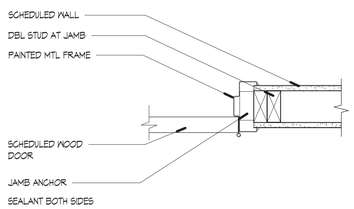

10 INT. DOOR JAMB
Scale: 1 1/2" = 1'-0"

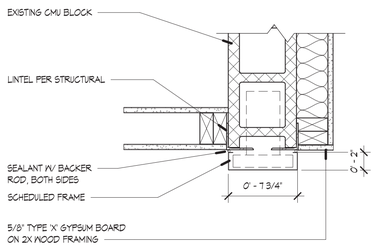

9 MASONRY-FRAME JAMB
Scale: 1 1/2" = 1'-0"

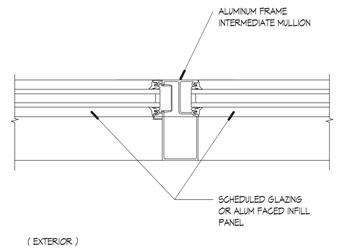

8 VERTICAL MULLION
Scale: 3" = 1'-0"

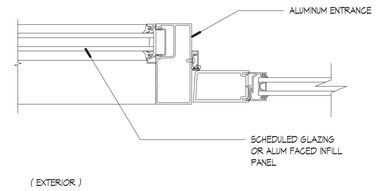

7 JAMB SIDELITE
Scale: 3" = 1'-0"

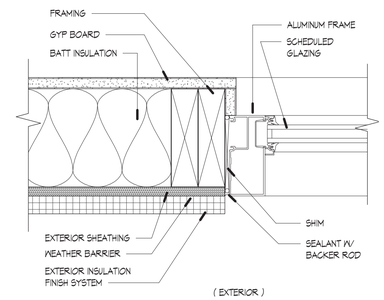

6 JAMB
Scale: 3" = 1'-0"

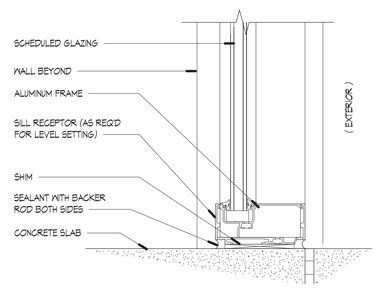

13 SILL-FLOOR
Scale: 3" = 1'-0"

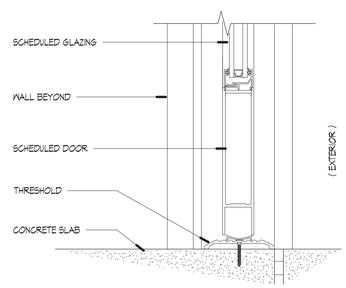

12 THRESHOLD
Scale: 3" = 1'-0"

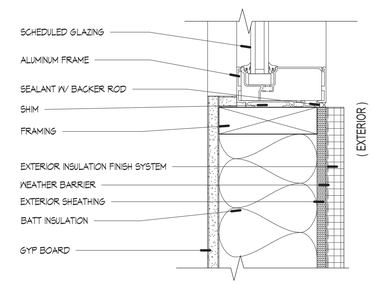

11 SILL
Scale: 3" = 1'-0"

MOLZENCORBIN
2701 Miles Road SE
Albuquerque, New Mexico 87106
505 242 5700 office
505 242 0673 fax
MolzenCorbin.com

NOTICE OF EXTENDED PAYMENT PROVISION:
THIS CONTRACT ALLOWS THE OWNER TO MAKE PAYMENT WITHIN 45 DAYS AFTER SUBMISSION OF AN UNDISPUTED REQUEST FOR PAYMENT

NUMERIC SCALE CONFIRMATION

DRAWINGS ARE DEPICTED AT INTENDED NUMERIC SCALES IF THIS BAR EQUALS ONE INCH

STATE OF NEW MEXICO
JOHN QUINN PATE
NO. 1784
REGISTERED ARCHITECT
6/12/19

REV NO	REV DATE	DESCRIPTION

PROJECT NUMBER: SFC182-11
DESIGNED BY: JSA
DRAWN BY: IWS
CHECKED BY: JQP
PRIME DESIGN PROFESSIONAL: JOHN Q. PATE
PROJECT DATE: JUNE 12, 2019

DOOR AND WINDOW DETAILS

LA PUEBLA FIRE STATION ADDITION
SANTA FE COUNTY
LA PUEBLA, NEW MEXICO

A-541
SHEET

© COPYRIGHT

I:\SANTA FE COUNTY\SFC182-11 La Puebla Fire\DWGS\2019-05-28 ALP-BPxx-.rvt
6/14/2019 11:15:38 AM

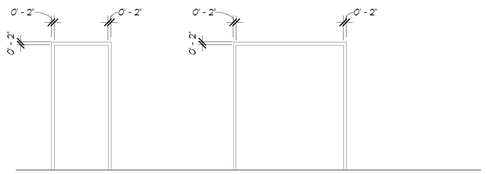

TYPE 1
HOLLOW
METAL FRAME

TYPE 2
HOLLOW
METAL FRAME

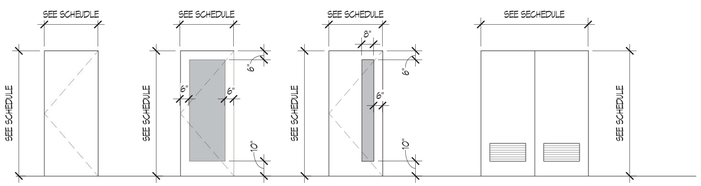

TYPE F
FLUSH WOOD
DOOR

TYPE FG
FULL GLASS
DOOR

TYPE N
NARROW LITE
DOOR

TYPE FL
FLUSH LOUVERED
DOOR

ROOM FINISH SCHEDULE

Room Number	Room Name	Floor Finish	Base Finish	Wall Finish	Ceiling Finish	Ceiling Height	Comments
101	Vestibule	Walk off Carpet Tile	Rubber Base	Semi-Gloss Paint	Semi-Gloss Paint	9' - 0"	
102A	Entry	Walk off Carpet Tile	Rubber Base	Semi-Gloss Paint	2X2 ACT	9' - 0"	
102B	Closet	Walk off Carpet Tile	Rubber Base	Semi-Gloss Paint	2X2 ACT	9' - 0"	
103	Kitchen	Ceramic Tile	Rubber Base	Wall per Interior Elevations	2X2 ACT	10' - 0"	
104	Dining	Ceramic Tile	Rubber Base	Eggshell Latex Paint	2X2 ACT	10' - 0"	
105	Day Room	Tile	Rubber Base	Eggshell Latex Paint	2X2 ACT	10' - 0"	
106	Corridor	Tile	Rubber Base	Eggshell Latex Paint	2X2 ACT	9' - 0"	
107	RR	Ceramic Tile	Ceramic Tile Bullnose Base	Wall Tile per Interior Elevations	Semi-Gloss Paint	9' - 0"	
108	RR	Ceramic Tile	Ceramic Tile Bullnose Base	Wall Tile per Interior Elevations	Semi-Gloss Paint	9' - 0"	
109	Corridor	Tile	Rubber Base	Eggshell Latex Paint		9' - 0"	
110	Vestibule	Walk off Carpet Tile	Rubber Base	Semi-Gloss Paint	Semi-Gloss Paint	9' - 0"	
111	Conference	Modular Carpet Tile	Rubber Base	Eggshell Latex Paint	2X2 ACT	9' - 0"	
112	Jan.	Tile	Rubber Base	Semi-Gloss Paint	Semi-Gloss Paint	9' - 0"	
113	Excercise	Resilient Excercise Flooring	Rubber Base	Eggshell Latex Paint	Semi-Gloss Paint		OPEN TO STRUCTURE
114	Dorm	Modular Carpet Tile	Rubber Base	Eggshell Latex Paint	2X2 ACT	8' - 6"	
115	Dorm	Modular Carpet Tile	Rubber Base	Eggshell Latex Paint	2X2 ACT	8' - 6"	
116	Dorm	Modular Carpet Tile	Rubber Base	Eggshell Latex Paint	2X2 ACT	8' - 6"	
117	Dorm	Modular Carpet Tile	Rubber Base	Eggshell Latex Paint	2X2 ACT	8' - 6"	
118	Dorm	Modular Carpet Tile	Rubber Base	Eggshell Latex Paint	2X2 ACT	8' - 6"	
119	Laundry	Ceramic Tile	Rubber Base	Semi-Gloss Paint	2X2 ACT	9' - 0"	
120	Elect	Concrete Sealer	Rubber Base	Semi-Gloss Paint	Semi-Gloss Paint	9' - 0"	
121	Mech.	Concrete Sealer	Rubber Base	Semi-Gloss Paint	Semi-Gloss Paint		OPEN TO STRUCTURE

STOREFRONT SCHEDULE

Type Mark	SIZE	Finish	Head	Jamb	Sill	HEAD HT.	Comments
A	3'-0" X 4'-8"	ALUM	1/A-541	5/A-541	6/A-541	7'-4"	ENTRY 102A WILL BE EXCEPTION FOR WINDOW SHADES
B	5'-0" X 7'-4"	ALUM	1/A-541	5/A-541	7/A-541	7'-4"	
C	7'-1" X 7'4"	ALUM	1/A-541	5/A-541	7/A-541	7'-4"	
D	18'-0" X 7'-4"	ALUM	1/A-541	5/A-541	7/A-541	7'-4"	
E	8'-0" X 4'-0"	ALUM	1/A-541	5/A-541	6/A-541	7'-4"	
F	12'-0" X 4'-8"	ALUM	1/A-541	5/A-541	6/A-541	7'-4"	
G	3'-0" X 4'-8"	ALUM	1/A-541	5/A-541	6/A-541	7'-4"	

DOOR SCHEDULE

DOOR #	Pair Doors	Door Width	Door Height	Door Thickness	Door Material	Type	Frame Type	Frame Material	Frame Jamb	Frame Head	FIRE RATING	CARD READER	Comments
101		3' - 0"	7' - 0"		ALUMINUM	FG		ALUMINUM	6/A-541	1/A-541		X	
101B		3' - 0"	7' - 0"		ALUMINUM	FG		ALUMINUM	6/A-541	1/A-541			
102	PAIR	6' - 0"	7' - 0"	0' - 1 3/4"	WOOD	F	TYPE 2	HM	5/A-541	10/A-541			
107		3' - 0"	7' - 0"	0' - 1 3/4"	WOOD	F	TYPE 1	HM	5/A-541	10/A-541			
108		3' - 0"	7' - 0"	0' - 1 3/4"	WOOD	F	TYPE 1	HM	5/A-541	10/A-541			
109		3' - 0"	7' - 0"	0' - 1 3/4"	WOOD	N	TYPE 1	HM	5/A-541	10/A-541		X	
110		3' - 0"	7' - 0"	0' - 1 3/4"	WOOD	N	TYPE 1	HM	5/A-541	10/A-541			
111		3' - 0"	7' - 0"	0' - 1 3/4"	WOOD	N	TYPE 1	HM	5/A-541	10/A-541			
112		3' - 0"	7' - 0"	0' - 1 3/4"	WOOD	F	TYPE 1	HM	5/A-541	10/A-541			
113a		3' - 0"	7' - 0"	0' - 1 3/4"	WOOD	FG	TYPE 1	HM	6/A-541	1/A-541			
113b		3' - 0"	7' - 0"		ALUMINUM	FG		ALUMINUM	6/A-541	1/A-541		X	
114		3' - 0"	7' - 0"	0' - 1 3/4"	WOOD	F	TYPE 1	HM	5/A-541	10/A-541	45 MIN.		
115		3' - 0"	7' - 0"	0' - 1 3/4"	WOOD	F	TYPE 1	HM	5/A-541	10/A-541	45 MIN.		
116		3' - 0"	7' - 0"	0' - 1 3/4"	WOOD	F	TYPE 1	HM	5/A-541	10/A-541	45 MIN.		
117		3' - 0"	7' - 0"	0' - 1 3/4"	WOOD	F	TYPE 1	HM	5/A-541	10/A-541	45 MIN.		
118		3' - 0"	7' - 0"	0' - 1 3/4"	WOOD	F	TYPE 1	HM	5/A-541	10/A-541	45 MIN.		
119		3' - 4"	7' - 0"	0' - 1 3/4"	WOOD	F		HM					COMMERICAL GRADE POCKET DOOR
120	PAIR	5' - 0"	7' - 0"	0' - 1 3/4"	WOOD	FL	TYPE 2	HM	5/A-541	10/A-541			
121		3' - 0"	7' - 0"	0' - 1 3/4"	WOOD	F	TYPE 1	HM	5/A-541	10/A-541			
122	OPENING	3' - 0"	7' - 0"	0' - 0"	-	-	TYPE 1	HM	9/A-541	4/A-541			CASED OPENING
123	OPENING	3' - 0"	7' - 0"	0' - 0"	-	-	TYPE 1	HM	9/A-541	4/A-541			CASED OPENING

ABBREVIATION KEY

DEFINITION

AC	ACCESS CONTROL / PROXY READER	N	NARROW LITE	CF	CLEAR ANNEALED FLOAT GLASS
CR	ACCESS CONTROL READER	NL	NARROW LITE AND LOUVER	CT	CLEAR TEMPERED FLOAT GLASS
F	FLUSH	AL	ALUMINUM	* IGS	INSULATING SAFETY GLAZING
FG	FULL GLASS	WD	WOOD	** SG	SAFETY GLAZING
FL	FLUSH WITH LOUVERED	OH	OVERHEAD SECTIONAL DOOR		
HM	HOLLOW METAL	IG	INSULATING GLASS		

WINDOW SHADE SCHEDULE

TYPE 1
DUAL ROLLER WINDOW SHADES 1 SECTION, BLACKOUT & 5% FABRIC

TYPE 2
SPRING ROLLER WINDOW SHADES 1 SECTION, BLACKOUT & 5% FABRIC

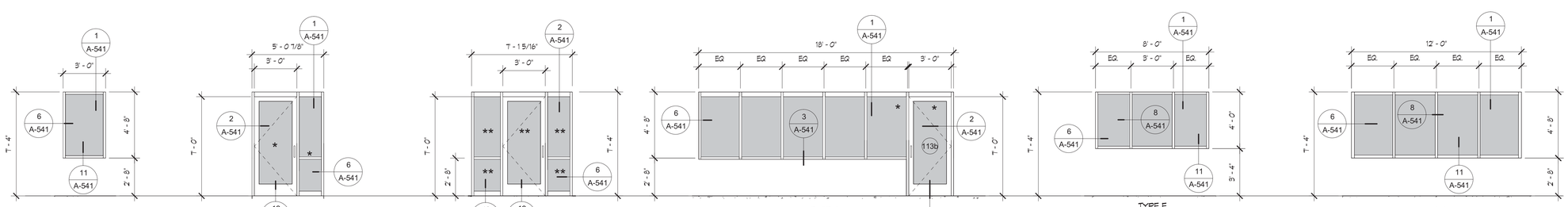

TYPE A
STOREFRONT

TYPE B
STOREFRONT
METAL DOOR

TYPE C
STOREFRONT
METAL DOOR

TYPE D
STOREFRONT WITH
EXTERIOR METAL DOOR

ROLLER SHADE : TYPE 2

TYPE E
KITCHEN
STOREFRONT

ROLLER SHADE: TYPE 2

TYPE F
DINING ROOM
STOREFRONT

ROLLER SHADE: TYPE 2

ROLLER SHADE :
TYPE 1: DORM 114, 115, 116, 117, AND 118
TYPE 2: ENTRY 102A, CONFERENCE RM. 111

MOLZENCORBIN

2701 Miles Road SE
Albuquerque, New Mexico 87106
505 242 5700 office
505 242 0673 fax
MolzenCorbin.com

NOTICE OF EXTENDED PAYMENT PROVISION:
THIS CONTRACT ALLOWS THE OWNER TO MAKE PAYMENT WITHIN 45 DAYS AFTER SUBMISSION OF AN UNDISPUTED REQUEST FOR PAYMENT

NUMERIC SCALE CONFIRMATION

DRAWINGS ARE DEPICTED AT
INTENDED NUMERIC SCALES IF THIS
BAR EQUALS ONE INCH

STATE OF NEW MEXICO
JOHN QUINN PATE
NO. 1784
REGISTERED ARCHITECT
6/12/19

REV NO	REV DATE	DESCRIPTION

PROJECT NUMBER: SFC182-11
DESIGNED BY: JSA
DRAWN BY: IWS
CHECKED BY: JQP
PRIME DESIGN PROFESSIONAL: JOHN Q. PATE
PROJECT DATE: JUNE 12, 2019

SCHEDULES

LA PUEBLA FIRE STATION ADDITION
SANTA FE COUNTY
LA PUEBLA, NEW MEXICO

A-601
SHEET

I:\SANTA FE COUNTY\SFC-182-11 La Puebla Fire\DWGS\2019-05-28 ALP-BPxx-.rvt
6/14/2019 11:15:41 AM
© COPYRIGHT

GENERAL NOTES

A. DESIGN AND PROVIDE FIRE SUPPRESSION SYSTEM (SPRINKLER SYSTEM).

B. COMPLY WITH SPECIFICATION SECTION 21 13 00, FIRE SUPPRESSION SYSTEM AND NEW MEXICO PUBLIC REGULATIONS COMMISSION, STATE FIRE MARSHAL'S OFFICE "PLANS REVIEW SUBMITTAL REQUIREMENTS".

C. DESIGN SHALL BE REVIEWED AND APPROVED BY THE STATE FIRE MARSHAL, WHICH IS THE AUTHORITY HAVING JURISDICTION

D. WORK SHALL BE COORDINATED WITH FIRE ALARM SYSTEM FOR THE PROJECT

E. DORM AREA OF BUILDING SHOWN IN FLOOR PLAN DEPICTS AREA TO BE INCLUDED IN WET FIRE SUPPRESSION SYSTEM,

F. SEE SHEET G-002 FOR BUILDING CRITERIA: OCCUPANCY TYPE, CONSTRUCTION TYPE, AREAS

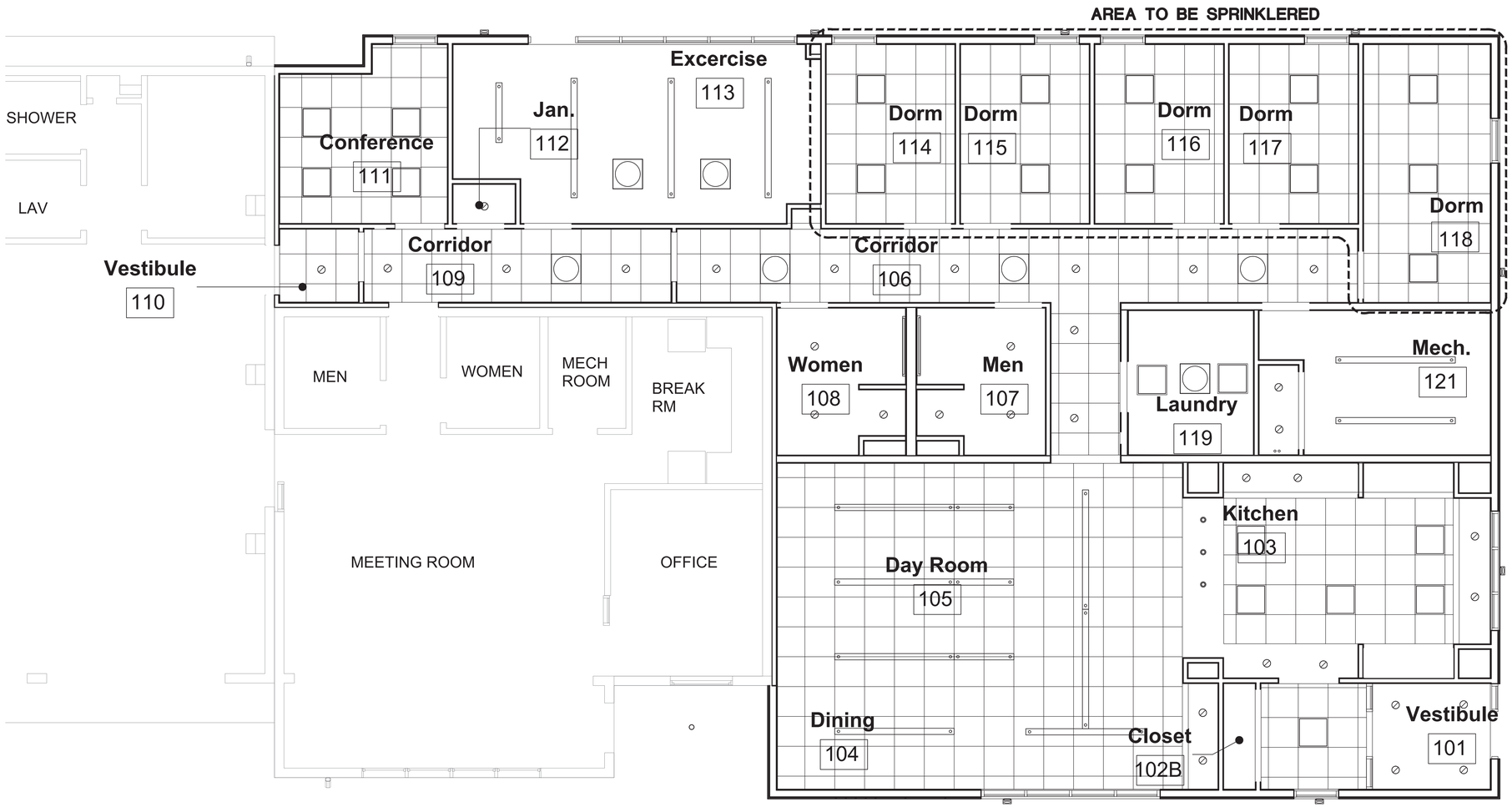

NORTH

0 2' 4' 8'

1/4"=1'-0'

1

SPRINKLER PLAN BASE

MOLZENCORBIN

2701 Miles Road SE
Albuquerque, New Mexico 87106
505 242 5700 office
505 242 0673 fax
MolzenCorbin.com

NUMERIC SCALE CONFIRMATION

DRAWINGS ARE DEPICTED AT INTENDED NUMERIC SCALES
IF THIS BAR EQUALS ONE INCH

REV NO	REV DATE	DESCRIPTION

PROJECT NUMBER: SFC182-11
DESIGNED BY:
DRAWN BY:
CHECKED BY:
PRIME DESIGN PROFESSIONAL: JOHN Q. PATE
PROJECT DATE: JUNE 2019

FIRE SUPPRESSION SYSTEM PLAN BASE
FOR DELEGATED DESIGN

LA PUEBLA FIRE STATION ADDITION
SANTA FE COUNTY
LA PUEBLA, NEW MEXICO

F-101

SHEET

© COPYRIGHT

PLOT DATE: 6/13/2019 10:32 AM
SAVE DATE: 6/11/2019 4:51 PM
I:\SANTA FE COUNTY\SFC182-11 LA PUEBLA FIRE\DWGS\FLP-101

FACP RECESSED FIRE ALARM CONTROL PANEL

GENERAL NOTES

A. DESIGN AND PROVIDE FIRE DETECTION AND ALARM SYSTEM FOR ENTIRE FACILITY EXPANDING ON EXISTING FIRE ALARM SYSTEM. AS BUILT INFORMATION IS NOT AVAILABLE. SYSTEM WAS INSTALLED IN 2007

B. COMPLY WITH SPECIFICATION SECTION 28 31 00, FIRE DETECTION AND ALARM SYSTEM AND NEW MEXICO PUBLIC REGULATIONS COMMISSION, STATE FIRE MARSHAL'S OFFICE "PLANS REVIEW SUBMITTAL REQUIREMENTS".

C. DESIGN SHALL BE REVIEWED AND APPROVED BY THE STATE FIRE MARSHAL, WHICH IS THE AUTHORITY HAVING JURISDICTION

D. WORK SHALL BE COORDINATED WITH FIRE SUPPRESSION SYSTEM FOR THE PROJECT

E. ENTIRE AREA OF BUILDING SHOWN IN FLOOR PLAN DEPICTS AREA TO BE INCLUDED IN DETECTION AND ALARM SYSTEM.

F. SEE SHEET G-003 FOR BUILDING CRITERIA: OCCUPANCY TYPE, CONSTRUCTION TYPE, AREAS AND LOCATIONS OF FIRE ALARM ANNUNCIATOR PANEL AND FIRE ALARM CONTROL PANEL

G. BIDDERS ARE ENCOURAGED TO VISIT SITE TO FAMILIARIZE THEMSELVES WITH EXISTING SYSTEM: PANELS, NOTIFICATION APPLIANCE(S), PULL STATIONS, ETC

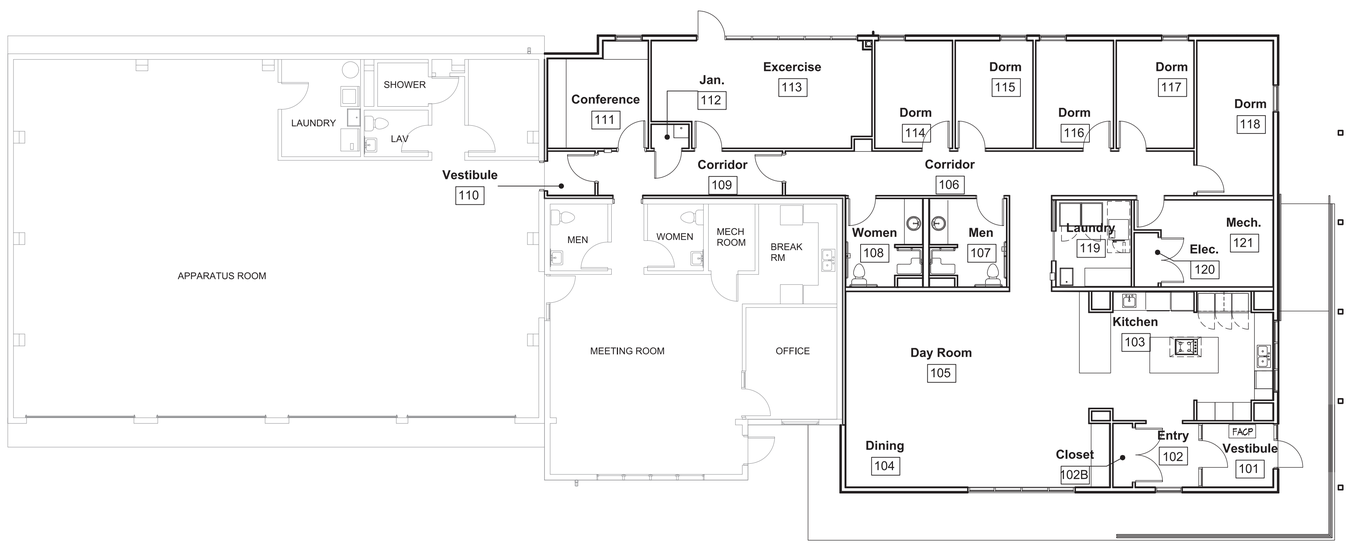

NORTH

FIRE ALARM PLAN BASE

0 4' 8' 16'

1/8"=1'-0" 1

MOLZENCORBIN

2701 Miles Road SE
Albuquerque, New Mexico 87106
505 242 5700 office
505 242 0673 fax
MolzenCorbin.com

NUMERIC SCALE CONFIRMATION

DRAWINGS ARE DEPICTED AT INTENDED NUMERIC SCALES
IF THIS BAR EQUALS ONE INCH

REV NO	REV DATE	DESCRIPTION

PROJECT NUMBER: SFC182-11
DESIGNED BY:
DRAWN BY:
CHECKED BY:
PRIME DESIGN PROFESSIONAL: JOHN Q. PATE
PROJECT DATE: JUNE 2019

FIRE ALARM AND DETECTION SYSTEM BASE PLAN
FOR DELEGATED DESIGN

LA PUEBLA FIRE STATION ADDITION
SANTA FE COUNTY
LA PUEBLA, NEW MEXICO

F-102
SHEET

PLOT DATE: 6/13/2019 10:32 AM
SAVE DATE: 6/13/2019 9:51 AM
I:\SANTA FE COUNTY\SFC182-11 LA PUEBLA FIRE\DWGS\F-102

© COPYRIGHT

KEYED NOTES

1. RELOCATE EXISTING PROPANE TANK.
2. REMOVE EXISTING LIQUID PROPANE GAS PIPING.
3. REMOVE EXISTING SEWER PIPING COMPLETE.
4. REMOVE EXISTING COLD WATER PIPING.
5. REMOVE TO APPROXIMATELY THIS LOCATION. SEE P-101 FOR NEW WORK TIE INS.
6. EXISTING SEWER TO REMAIN.
7. EXISTING COLD WATER TO REMAIN.
8. EXISTING LIQUID PROPANE GAS PIPING TO REMAIN.

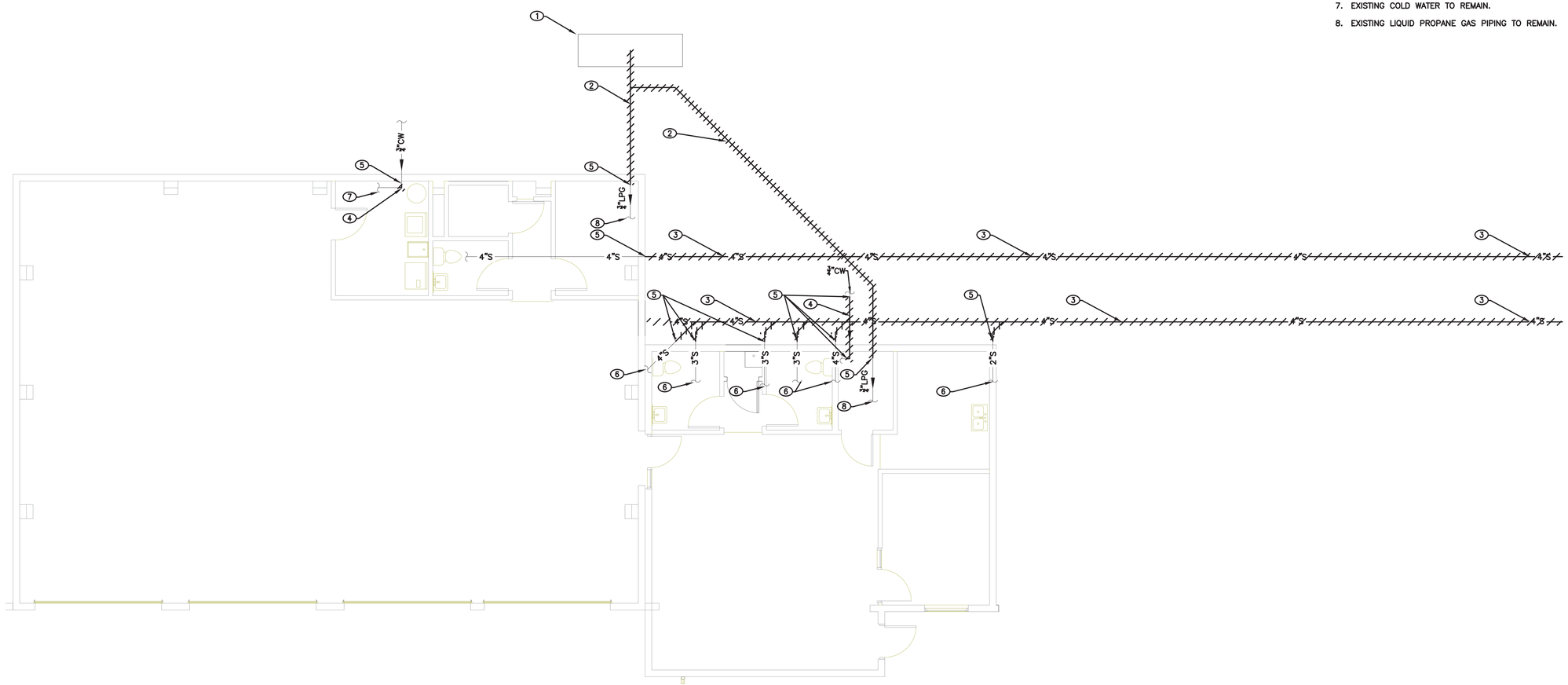

PLUMBING DEMO PLAN

SCALE: 3/16"=1'-0"

N

0 1' 2' 4' 8' 12'

3/16"=1'-0"

MOLZENCORBIN

2701 Miles Road SE
Albuquerque, New Mexico 87106
505 242 5700 office
505 242 0673 fax
MolzenCorbin.com

NUMERIC SCALE CONFIRMATION

DRAWINGS ARE DEPICTED AT INTENDED NUMERIC SCALES
IF THIS BAR EQUALS ONE INCH

PAUL M. ROMERO
NEW MEXICO
14932
REGISTERED PROFESSIONAL ENGINEER

06-12-19

REV NO	REV DATE	DESCRIPTION

PROJECT NUMBER:	SFC182-11
DESIGNED BY:	PMR
DRAWN BY:	PMR
CHECKED BY:	PMR
PRIME DESIGN PROFESSIONAL:	JOHN Q. PATE
PROJECT DATE:	MAY 2019

PLUMBING DEMO PLAN

LA PUEBLA FIRE STATION ADDITION
SANTA FE COUNTY
LA PUEBLA, NEW MEXICO

P-101D

SHEET

PLOT DATE: 6/11/2019 1:54 PM
SAVE DATE: 6/10/2019 4:01 PM
C:\USERS\PROMERO\DOCUMENTS\PORTFOLIO\LA PUEBLA FIRE STATION\DWGS\P-101.D

© COPYRIGHT

KEYED NOTES

1. PROVIDE AND INSTALL NEW SEWER PIPING TO EXISTING SEWER PIPING AT APPROXIMATELY THIS LOCATION.
2. PROVIDE AND INSTALL SEWER PIPING AT 2% MINIMUM SLOPE. SIZE AS INDICATED ON PLANS.
3. PROVIDE AND INSTALL VENT PIPING. SIZE AS INDICATED ON PLANS.
4. PROVIDE AND INSTALL VENT THRU ROOF. SIZE AS INDICATED ON PLANS.
5. PROVIDE AND INSTALL WALL CLEAN OUT (WCO). TYPICAL OF THIS SYMBOL ON THIS SHEET.
6. PROVIDE AND INSTALL FLOOR CLEAN OUT (FCO).
7. PROVIDE AND INSTALL DOUBLE CLEAN OUT TO GRADE (DCOTG).
8. SEE CIVIL DRAWINGS FOR CONTINUATION.
9. EXISTING FIXTURES TO REMAIN. NO NEW WORK.
10. EXTRACTOR. PROVIDE AND INSTALL PLUMBING MANUFACTURER'S REQUIREMENTS.
11. PROVIDE AND INSTALL ROOF DRAIN. SIZE AS INDICATED ON DRAWINGS.

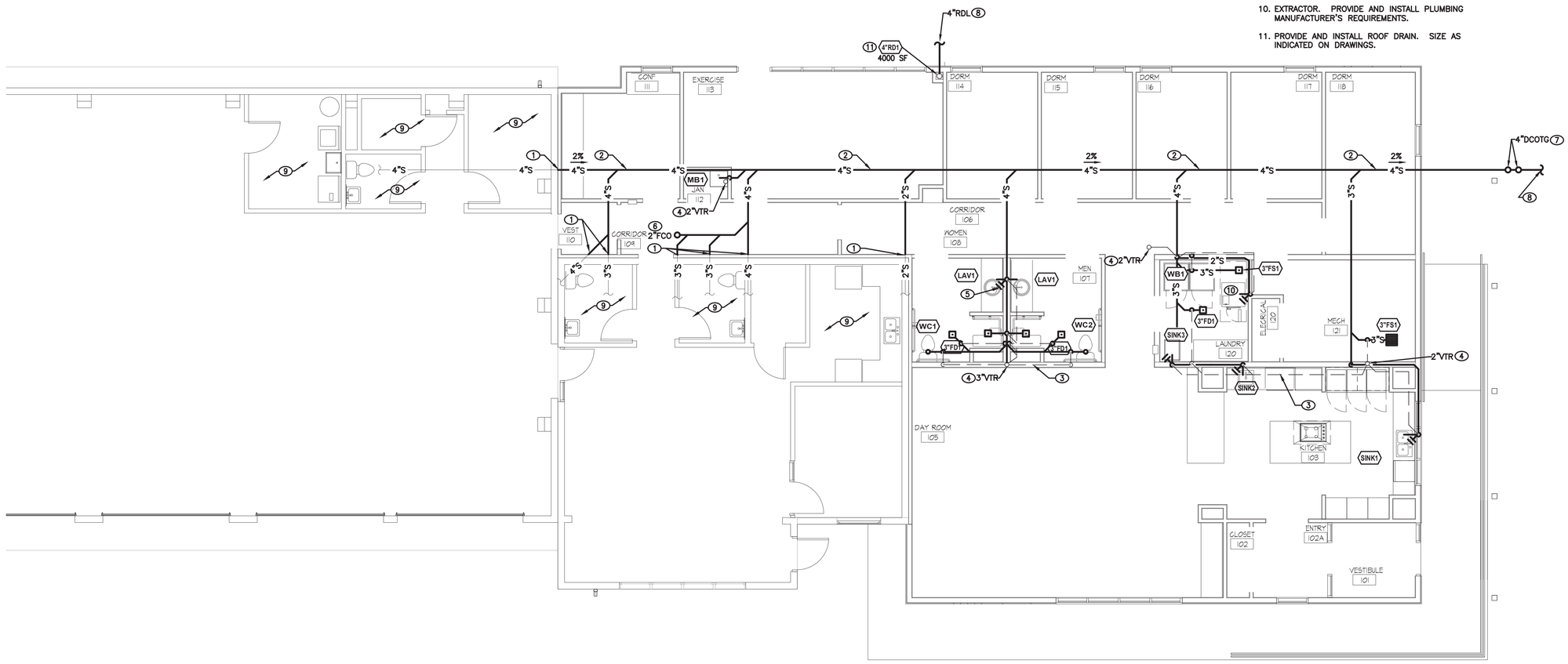

PLUMBING SEWER AND VENT PLAN

SCALE: 3/16"=1'-0"

N

0 1' 2' 4' 8' 12'
3/16"=1'-0"

MOLZENCORBIN
2701 Miles Road SE
Albuquerque, New Mexico 87106
505 242 5700 office
505 242 0673 fax
MolzenCorbin.com

NUMERIC SCALE CONFIRMATION
DRAWINGS ARE DEPICTED AT INTENDED NUMERIC SCALES
IF THIS BAR EQUALS ONE INCH

PAUL M. ROMERO
NEW MEXICO
14932
REGISTERED PROFESSIONAL ENGINEER
06-12-19

REV NO	REV DATE	DESCRIPTION

PROJECT NUMBER:	SFC182-11
DESIGNED BY:	PMR
DRAWN BY:	PMR
CHECKED BY:	PMR
PRIME DESIGN PROFESSIONAL:	JOHN Q. PATE
PROJECT DATE:	MAY 2019

PLUMBING SEWER AND VENT PLAN

LA PUEBLA FIRE STATION ADDITION
SANTA FE COUNTY
LA PUEBLA, NEW MEXICO

P-101
SHEET

PLOT DATE: 6/11/2019 1:48 PM
SAVE DATE: 6/11/2019 1:46 PM
C:\USERS\PROMERO\DOCUMENTS\PORTFOLIO\LA PUEBLA FIRE STATION\DWGS\P-101

© COPYRIGHT

KEYED NOTES

1. RELOCATE EXISTING LPG TANK TO APPROXIMATELY THIS LOCATION. SEE P-103 FOR PIPING REQUIREMENTS.
2. EXISTING ¾"CW ON SITE TO BE ABANDONED IN PLACE. CAP PIPING DOWNSTREAM.
3. ¾"CW CAPPED.
4. PROVIDE AND INSTALL NEW PIPING TO EXISTING PIPING AT APPROXIMATELY THIS LOCATION. EXISTING BOOSTER PUMP CAN BE REMOVED COMPLETE.
5. PROVIDE AND INSTALL NEW COLD WATER SERVICE. SIZE AS INDICATED ON PLANS. SEE CIVIL DRAWINGS FOR CONTINUATION.
6. 6" FIRE SERVICE. SEE CIVIL DRAWINGS FOR CONTINUATION.
7. FIRE BOOSTER PUMP SKID, SYSTEM, SPRINKLERS AND CONTROLS COMPLETE BY FIRE PROTECTION CONTRACTOR.
8. PROVIDE AND INSTALL EQUIPMENT AS INDICATED ON EQUIPMENT SCHEDULE. INSTALLATION SHALL BE PER MANUFACTURER'S REQUIREMENTS.
9. PROVIDE AND INSTALL 3" DRAIN TO OUTDOORS. TERMINATE WITH FLAPPER OUTLET.

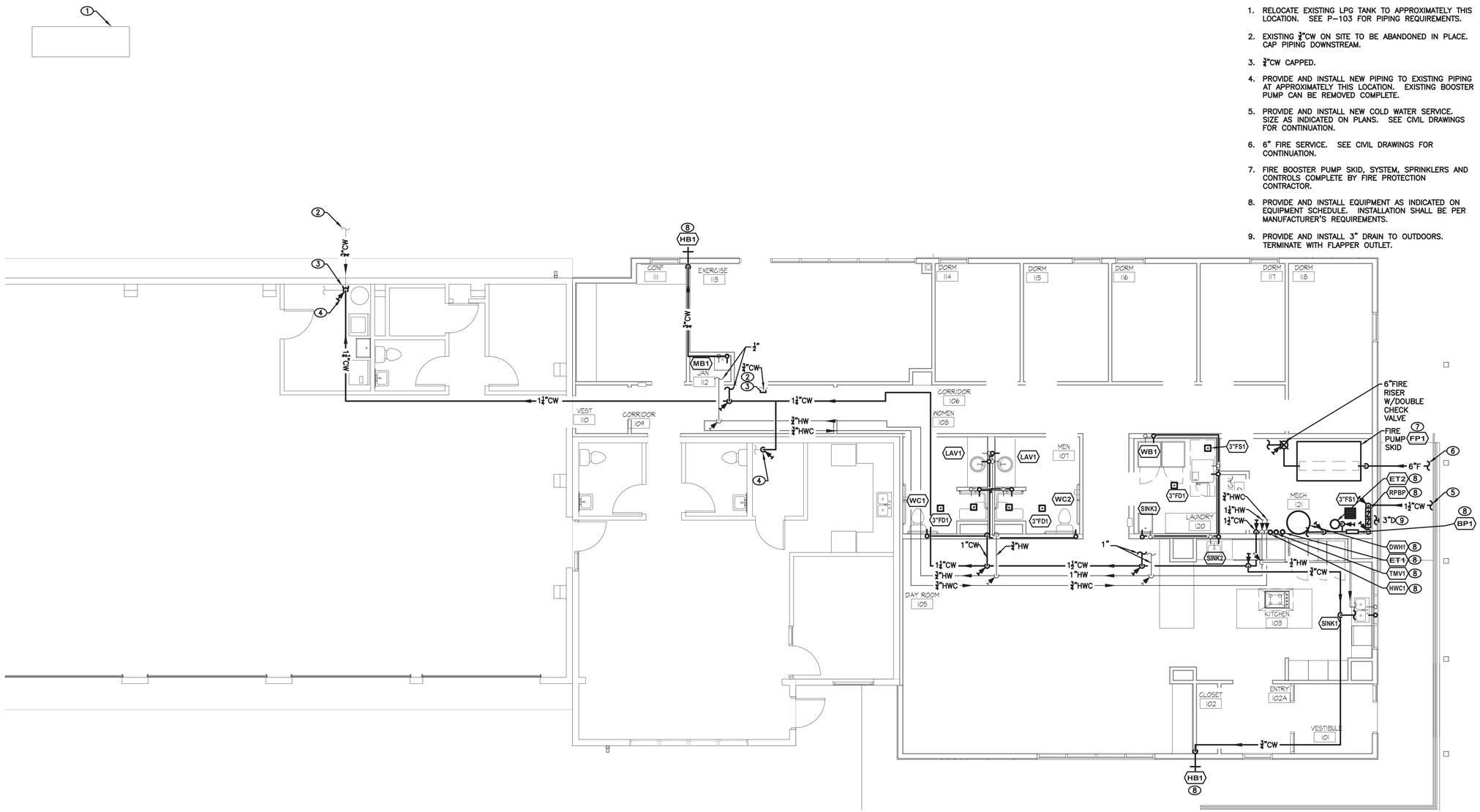

PLUMBING WATER PLAN

SCALE: 3/16"=1'-0"

N

0 1' 2' 4' 8' 12'

3/16"=1'-0"

MOLZENCORBIN

2701 Miles Road SE
Albuquerque, New Mexico 87106
505 242 5700 office
505 242 0673 fax
MolzenCorbin.com

NUMERIC SCALE CONFIRMATION

DRAWINGS ARE DEPICTED AT INTENDED NUMERIC SCALES
IF THIS BAR EQUALS ONE INCH

PAUL M. ROMERO
NEW MEXICO
14932
REGISTERED PROFESSIONAL ENGINEER

06-12-19

REV NO	REV DATE	DESCRIPTION

PROJECT NUMBER: SFC182-11
DESIGNED BY: PMR
DRAWN BY: PMR
CHECKED BY: PMR
PRIME DESIGN PROFESSIONAL: JOHN Q. PATE
PROJECT DATE: MAY 2019

PLUMBING WATER PLAN

LA PUEBLA FIRE STATION ADDITION
SANTA FE COUNTY
LA PUEBLA, NEW MEXICO

P-102

SHEET

PLOT DATE: 6/11/2019 1:49 PM
SAVE DATE: 6/10/2019 3:36 PM
E:\USERS\PROMERO\DOCUMENTS\PORTFOLIO\LA PUEBLA FIRE STATION\DWGS\P-P-102

© COPYRIGHT

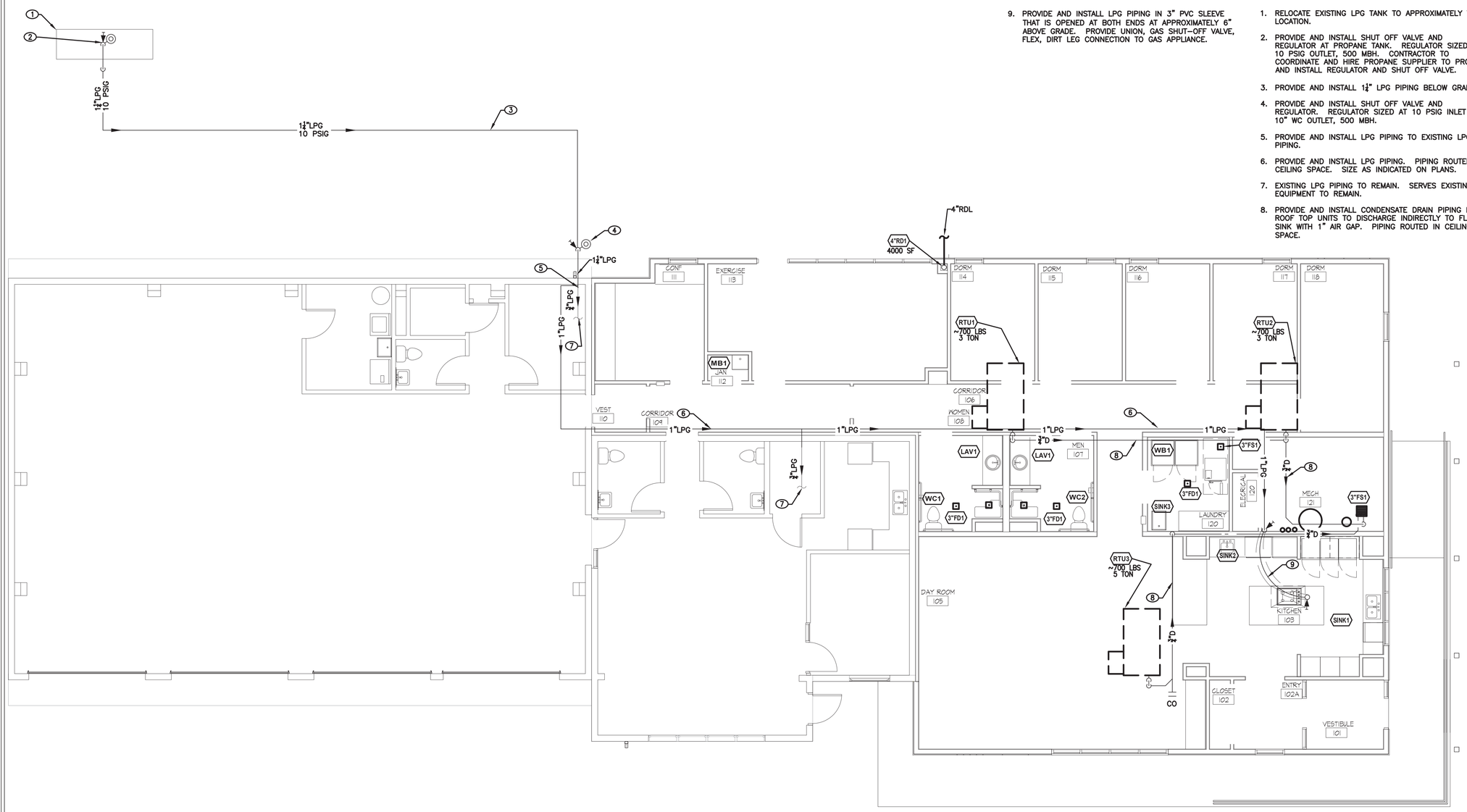

KEYED NOTES

1. RELOCATE EXISTING LPG TANK TO APPROXIMATELY THIS LOCATION.
2. PROVIDE AND INSTALL SHUT OFF VALVE AND REGULATOR AT PROPANE TANK. REGULATOR SIZED AT 10 PSIG OUTLET, 500 MBH. CONTRACTOR TO COORDINATE AND HIRE PROPANE SUPPLIER TO PROVIDE AND INSTALL REGULATOR AND SHUT OFF VALVE.
3. PROVIDE AND INSTALL 1¼" LPG PIPING BELOW GRADE.
4. PROVIDE AND INSTALL SHUT OFF VALVE AND REGULATOR. REGULATOR SIZED AT 10 PSIG INLET AND 10" WC OUTLET, 500 MBH.
5. PROVIDE AND INSTALL LPG PIPING TO EXISTING LPG PIPING.
6. PROVIDE AND INSTALL LPG PIPING. PIPING ROUTED IN CEILING SPACE. SIZE AS INDICATED ON PLANS.
7. EXISTING LPG PIPING TO REMAIN. SERVES EXISTING EQUIPMENT TO REMAIN.
8. PROVIDE AND INSTALL CONDENSATE DRAIN PIPING FROM ROOF TOP UNITS TO DISCHARGE INDIRECTLY TO FLOOR SINK WITH 1" AIR GAP. PIPING ROUTED IN CEILING SPACE.
9. PROVIDE AND INSTALL LPG PIPING IN 3" PVC SLEEVE THAT IS OPENED AT BOTH ENDS AT APPROXIMATELY 6" ABOVE GRADE. PROVIDE UNION, GAS SHUT-OFF VALVE, FLEX, DIRT LEG CONNECTION TO GAS APPLIANCE.

PLUMBING LPG AND CONDENSATE DRAIN PLAN

SCALE: 3/16"=1'-0"

N

0 1' 2' 4' 8' 12'
3/16"=1'-0"

MOLZENCORBIN
2701 Miles Road SE
Albuquerque, New Mexico 87106
505 242 5700 office
505 242 0673 fax
MolzenCorbin.com

NUMERIC SCALE CONFIRMATION
DRAWINGS ARE DEPICTED AT INTENDED NUMERIC SCALES
IF THIS BAR EQUALS ONE INCH

PAUL M. ROMERO
NEW MEXICO
14932
REGISTERED PROFESSIONAL ENGINEER
06-12-19

REV NO	REV DATE	DESCRIPTION

PROJECT NUMBER:	SFC182-11
DESIGNED BY:	PMR
DRAWN BY:	PMR
CHECKED BY:	PMR
PRIME DESIGN PROFESSIONAL:	JOHN Q. PATE
PROJECT DATE:	MAY 2019

PLUMBING LPG AND CONDENSATE DRAIN PLAN

LA PUEBLA FIRE STATION ADDITION
SANTA FE COUNTY
LA PUEBLA, NEW MEXICO

P-103
SHEET

PLOT DATE: 6/11/2019 1:49 PM
SAVE DATE: 6/11/2019 1:44 PM
C:\USERS\PROMERO\DOCUMENTS\PORTFOLIO\LA PUEBLA FIRE STATION\DWGS\P-103

© COPYRIGHT

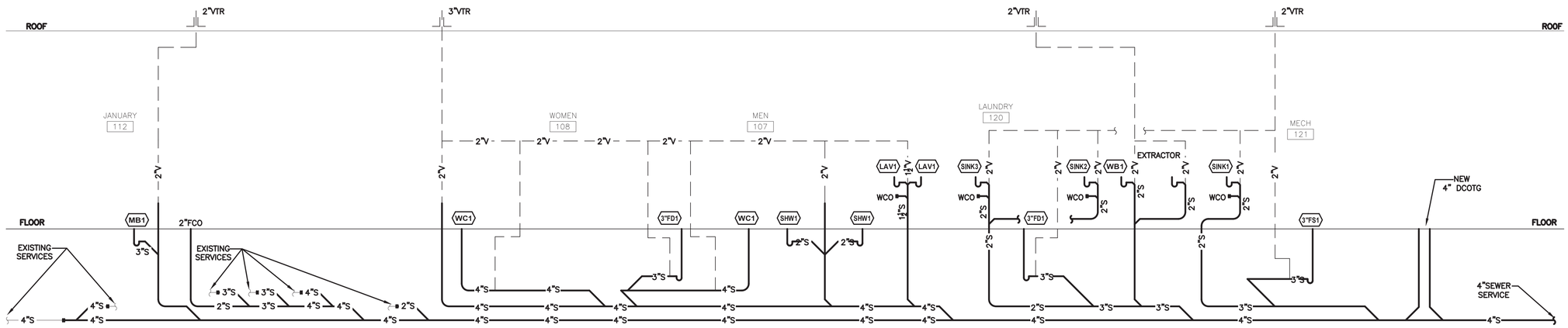

PLUMBING SEWER AND VENT SCHEMATIC

SCALE: NONE

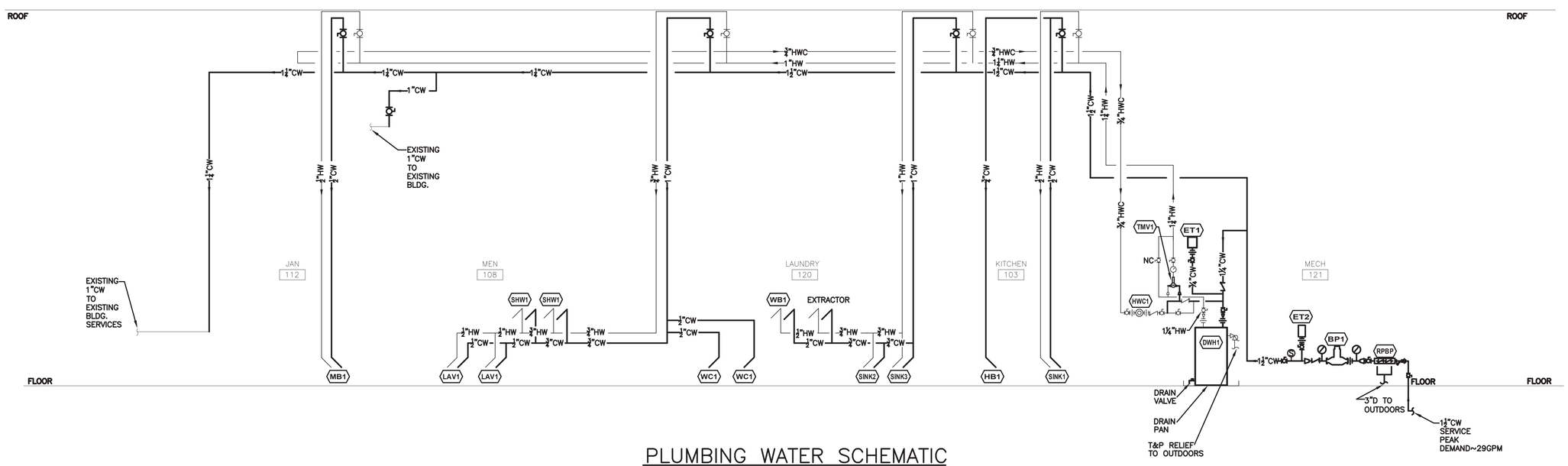

PLUMBING WATER SCHEMATIC

SCALE: NONE

MOLZENCORBIN

2701 Miles Road SE
Albuquerque, New Mexico 87106
505 242 5700 office
505 242 0673 fax
MolzenCorbin.com

NUMERIC SCALE CONFIRMATION

DRAWINGS ARE DEPICTED AT INTENDED NUMERIC SCALES
IF THIS BAR EQUALS ONE INCH

PAUL M. ROMERO
NEW MEXICO
14932
REGISTERED PROFESSIONAL ENGINEER
06-12-19

REV NO	REV DATE	DESCRIPTION

PROJECT NUMBER: SFC182-11
DESIGNED BY: PMR
DRAWN BY: PMR
CHECKED BY: PMR
PRIME DESIGN PROFESSIONAL: JOHN Q. PATE
PROJECT DATE: MAY 2019

PLUMBING SCHEMATICS

LA PUEBLA FIRE STATION ADDITION
SANTA FE COUNTY
LA PUEBLA, NEW MEXICO

P-201

SHEET

PLOT DATE: 6/11/2019 1:50 PM
SAVE DATE: 6/10/2019 3:37 PM
E:\USERS\PROMERO\DOCUMENTS\PORTFOLIO\LA PUEBLA FIRE STATION\DWGS\P-P-201

© COPYRIGHT

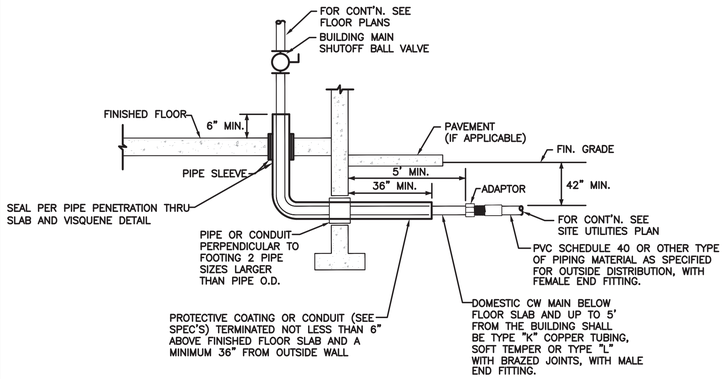

A WATER SERVICE ENTRY DETAIL
SCALE = NONE

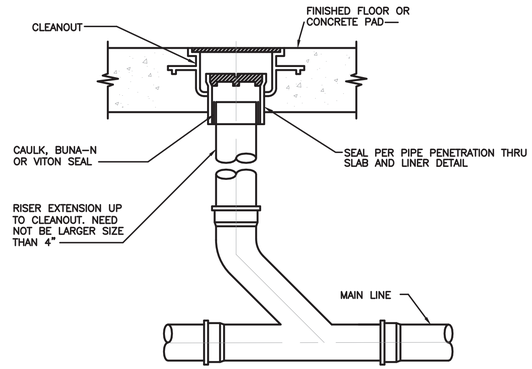

B FLOOR CLEANOUT DETAIL
SCALE = NONE

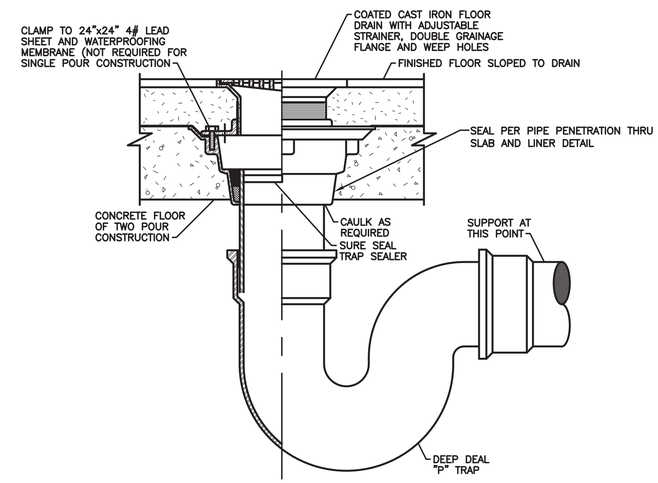

C FLOOR/SHOWER DRAIN DETAIL
SCALE = NONE

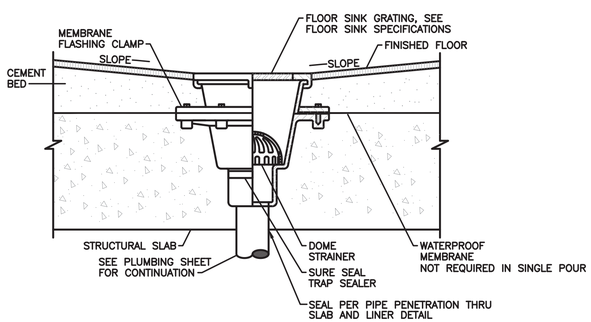

D FLOOR SINK DETAIL
SCALE = NONE

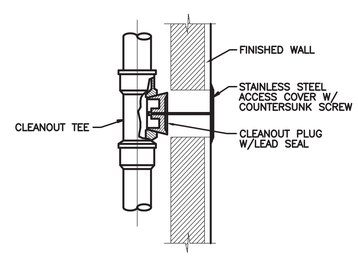

E WALL CLEANOUT DETAIL
SCALE = NONE

MOLZENCORBIN
2701 Miles Road SE
Albuquerque, New Mexico 87106
505 242 5700 office
505 242 0673 fax
MolzenCorbin.com

NUMERIC SCALE CONFIRMATION
DRAWINGS ARE DEPICTED AT INTENDED NUMERIC SCALES
IF THIS BAR EQUALS ONE INCH

PAUL M. ROMERO NEW MEXICO 14932 REGISTERED PROFESSIONAL ENGINEER
06-12-19

REV NO	REV DATE	DESCRIPTION

PROJECT NUMBER: SFC182-11
DESIGNED BY: PMR
DRAWN BY: PMR
CHECKED BY: PMR
PRIME DESIGN PROFESSIONAL: JOHN Q. PATE
PROJECT DATE: MAY 2019

PLUMBING DETAILS

LA PUEBLA FIRE STATION ADDITION
SANTA FE COUNTY
LA PUEBLA, NEW MEXICO

P-501
SHEET

PLOT DATE: 6/11/2019 1:51 PM
SAVE DATE: 6/10/2019 3:53 PM
C:\USERS\PMARTIN\DOCUMENTS\PORTFOLIO\LA PUEBLA FIRE STATION\DWGS\P-P-501

© COPYRIGHT

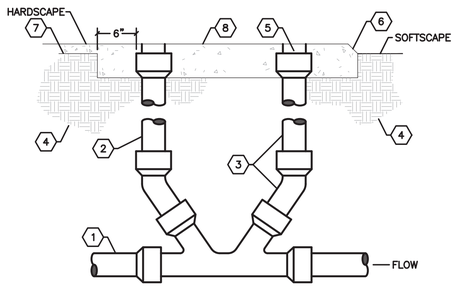

KEYED NOTES

1. SERVICE LINE, SEE SPECIFICATIONS FOR PIPE MATERIALS.
2. SAME SIZE AS SERVICE LINE
3. CAST IRON SOIL PIPE RISER AND FITTINGS.
4. COMPACTED EARTH.
5. IRON FERRULE WITH A BRASS COUNTER–SUNK SCREW PLUG.
6. 2" CHAMFER ON ALL COLLARS IN EARTH.
7. FINISH GRADE.
8. 4" THICK CONCRETE COLLAR.

A DOUBLE CLEANOUT TO GRADE DETAIL (DCOTG)
SCALE = NONE

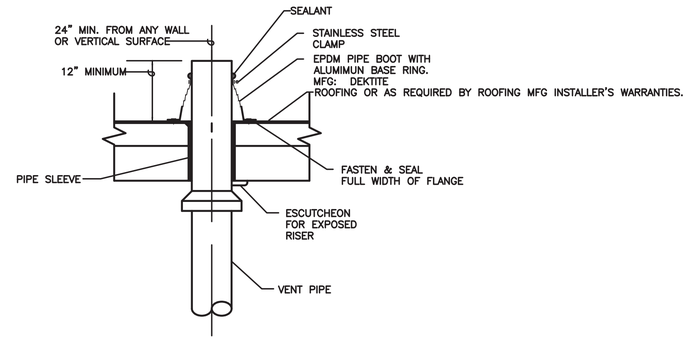

B VENT THRU ROOF DETAIL
SCALE = NONE

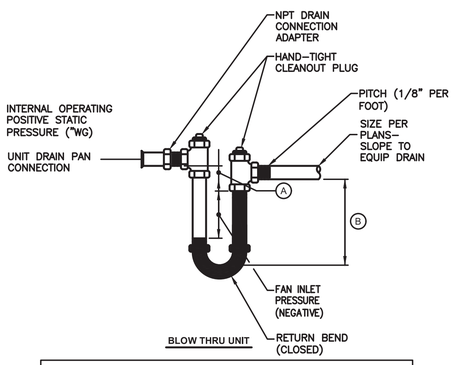

BLOW THRU UNIT

NOTES:
(A) DIMENSION EQUAL TO 1/2" (MIN.)
(B) EQUAL TO MAXIMUM FAN OUTLET PRESSURE +1/2" (MIN.)

HVAC CONDENSATE TRAP DRAIN
NOT TO SCALE

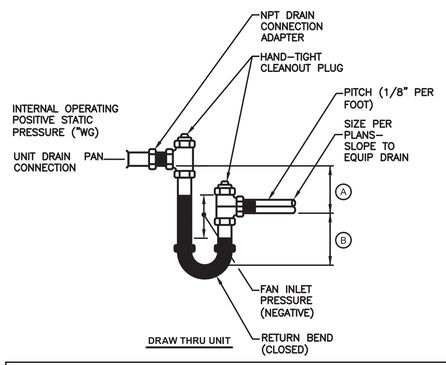

DRAW THRU UNIT

NOTES:
(A) DIMENSION EQUAL TO MAXIMUM FAN INLET PRESSURE (INCH WC) +1" (MIN.)
(B) DIMENSION EQUAL TO (A) /2 (MIN.)

HVAC CONDENSATE TRAP DRAIN
NOT TO SCALE

C CONDENSATE P-TRAP DETAIL
SCALE = NONE

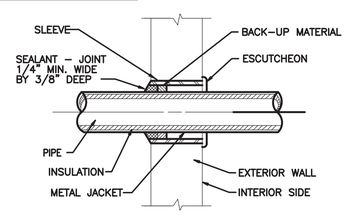

D PIPE SLEEVE FOR INSULATED PIPE THRU WALL-ABOVE GRADE
SCALE = NONE

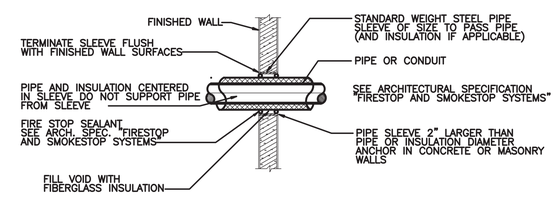

E PIPE FIRE PENETRATION DETAILS
SCALE = NONE

MOLZENCORBIN
2701 Miles Road SE
Albuquerque, New Mexico 87106
505 242 5700 office
505 242 0673 fax
MolzenCorbin.com

NUMERIC SCALE CONFIRMATION
DRAWINGS ARE DEPICTED AT INTENDED NUMERIC SCALES
IF THIS BAR EQUALS ONE INCH

PAUL M. ROMERO NEW MEXICO 14932 REGISTERED PROFESSIONAL ENGINEER
06-12-19

REV NO.	REV DATE	DESCRIPTION

PROJECT NUMBER: SFC182-11
DESIGNED BY: PMR
DRAWN BY: PMR
CHECKED BY: PMR
PRIME DESIGN PROFESSIONAL: JOHN Q. PATE
PROJECT DATE: MAY 2019

PLUMBING DETAILS

LA PUEBLA FIRE STATION ADDITION
SANTA FE COUNTY
LA PUEBLA, NEW MEXICO

P-502
SHEET

PLOT DATE: 6/11/2019 1:52 PM
SAVE DATE: 6/10/2019 3:37 PM
C:\USERS\PRISMERO\DOCUMENTS\PORTFOLIO\LA PUEBLA FIRE STATION\DWGS\P-502

© COPYRIGHT

PLUMBING LEGEND

SYMBOL	DESCRIPTION
½"HWC / ½"HW / ½"CW	HOT WATER CIRCULATION / HOT WATER / COLD WATER
2"S	SANITARY SEWER
2"V	VENT
½"D	CONDENSATE DRAIN OR DRAIN
½"NG	NATURAL GAS
½"NPW	NON POTABLE WATER
½"MA	MEDICAL AIR
½"O2	OXYGEN
½"N2O	NITROUS OXIDE
2"AE	ANESTHESIA EVAC
2"FW	FILTERED WATER
	THERMOMETER
	FLOOR SINK AND FLOOR DRAIN
	STRAINER
COTG FCO	CLEAN OUT TO GRADE OR FLOOR CLEANOUT
DCOTG	DOUBLE CLEANOUT TO GRADE
	WALL CLEANOUT (WCO) OR CLEANOUT (CO)
	PRESSURE REDUCING VALVE OR REGULATOR
	PRESSURE GAUGE
	T&P RELIEF
	BACKFLOW PREVENTER OR DOUBLE CHECK
	BALL VALVE
	GATE VALVE
	GATE VALVE IN VALVE BOX
	GAS VALVE OR CIRCUIT SETTER
	CHECK VALVE
	VALVE IN RISER / VALVE IN DROP
	PIPING DROP
	PIPING RISE
	PIPING "T" DROP
	CAP
	REDUCER
	UNION
	HOSE BIB OR WALL HYRANT
	MISCELLANEOUS
LAV-1	EQUIPMENT/FIXTURE LIST DESIGNATION
	KEYED CONSTRUCTION NOTE
A1 NAME SCALE	NUMBER IN SYMBOL REFERS TO DETAIL # / INDICATES NAME OF DETAIL
	FLOW ARROW
	BREAK OR CONTNUATION
	NEW TO EXISTING CONNECTION

PLUMBING GENERAL NOTES

A. CONTRACTORS AND SUB-CONTRACTORS SHALL CAREFULLY REVIEW THE CONSTRUCTION DOCUMENTS. INFORMATION REGARDING THE COMPLETE WORK IS DISPERSED THROUGHOUT THE DOCUMENT SET AND CANNOT BE ACCURATELY DETERMINED WITHOUT REFERENCE TO THE COMPLETE DOCUMENT SET.

B. COORDINATE WITH THE WORK OF OTHER TRADES, EQUIPMENT FURNISHED BY OTHERS, REQUIREMENTS OF THE OWNER, AND WITH THE CONSTRAINTS OF THE EXISTING CONDITIONS AT THE PROJECT SITE.

C. DRAWINGS FOR PLUMBING WORK ARE DIAGRAMMATIC, SHOWING THE GENERAL LOCATION, TYPE, LAYOUT, AND EQUIPMENT REQUIRED. PROVIDE PLUMBING, CONNECTIONS, ACCESSORIES, OFFSETS, CONTROLS AND MATERIALS NECESSARY FOR A COMPLETE FUNCTIONAL SYSTEM INSTALLATION.

D. BALL VALVES 2 INCHES AND SMALLER SHALL BRONZE BODY, BLOW-OUT PROOF CAPTIVE STEM, DOUBLE TEFLON SEATS, FULL PORTED, STAINLESS STEEL OR CHROME PLATED BRASS BALL, TWO-PIECE, THREADED OR SOLDERED ENDS. NIBCO T-585-70 OR S-585-70, OR A THREE-PIECE BRONZE BODY, FULL PORT, STAINLESS STEEL TRIM, WITH A BLOWOUT-PROOF STEM. NIBCO T OR S-595-Y OR EQUIVALENT.

E. SWING CHECK VALVES 2 INCHES AND SMALLER: CLASS 125, THREADED ENDS, BRONZE BODY, Y PATTERN, RENEWABLE SEAT AND DISK, AND SCREW CAP. NIBCO T-413 F OR EQUIVALENT.

F. DOMESTIC COLD WATER, DOMESTIC HOT WATER AND TEPID WATER PIPING SHALL BE INSTALLED WITH 1 INCH THICK PREFORMED PIPE INSULATION COMPLYING WITH ASTM C547, TYPE I-MOLDED WITH FACTORY APPLIED, ALL PURPOSE, VAPOR RETARDER JACKET WITH SELF SEALING ADHESIVE LAP. UTILIZE STANDARD PVC FITTING COVERS WITH FIBERGLASS INSERTS FOR 45 OR 90 DEGREE FITTINGS. INSULATION CONDUCTIVITY SHALL NOT EXCEED 0.27 BTU PER INCH/H xFT^2x°F. FURNISH WITH PVC OR ALUMINUM JACKET WHEN EXPOSED IN FINISHED SPACES OR WHEN INSTALLED 10 FEET BELOW CEILING IN MECHANICAL ROOMS. COLD WATER PIPING INSULATION SHALL HAVE A VAPOR BARRIER. AT ALL HANGER AND SUPPORT LOCATIONS, PROVIDE 8 INCH LONG, 20 GUAGE GALVANIZED IRON INSULATION GUARDS. INSULATION AT THESE LOCATIONS SHALL BE RIGID.

G. DOMESTIC TEPID WATER, HOT WATER, AND COLD WATER WATER PIPING ABOVE GRADE SHALL BE TYPE L HARD DRAWN COPPER TUBING, ASTM B88. WITH WROUGHT COPPER SOLDER TYPE FITTINGS CONFORMING TO ASME B16.22 OR CAST COPPER CONFORMING TO ASME B16.18. JOINTS SHALL BE SOLDERED WITH 95-5 LEAD FREE SOLDER. PLUMBING FOR POTABLE DOMESTIC WATER SYSTEMS MUST BE LEAD FREE PER PUBLIC LAW 99-339, SAFE DRINKING WATER ACT. LEAD FREE IS DEFINED AS NO MORE THAN 0.2 PERCENT LEAD IN SOLDER AND FLUX, AND NOT MORE THAN 8 PERCENT LEAD IN PIPE AND FITTINGS. FOR POTABLE WATER SERVICE, PROVIDE PIPING AND FITTINGS COMPLYING WITH NSF 61.

H. SEWER, VENT, AND ROOF DRAIN LEADER PIPING BELOW GRADE SHALL BE THE FOLLOWING:

CAST IRON SOIL PIPE: ASTM A74, SERVICE WEIGHT, BELL AND SPIGOT ENDS. USE CAST IRON FITTINGS, ASTM A74. JOINTS: HUB AND SPIGOT, CISPI HSN COMPRESSION TYPE WITH ASTM C564 NEOPRENE GASKETS OR LEAD AND OAKUM. JOINTS MANUFACTURED BY TYLER LUBRI/FAST OR EQUIVALENT.

I. SEWER , VENT AND ROOF DRAIN LEADER PIPING ABOVE GRADE SHALL BE THE FOLLOWING:

CAST IRON PIPE: CISPI 301, HUBLESS, SERVICE WEIGHT. FITTINGS: CAST IRON, CISPI 301. JOINTS: CISPI 310, NEOPRENE GASKETS AND STAINLESS STEEL CLAM AND SHIELD ASSEMBLIES.

J. CONDENSATE DRAIN PIPING TO BE HARD DRAWN COPPER DRAINAGE TUBE (DWV) ASTM B306 WITH WROUGHT DRAINAGE FITTINGS IN ACCORDANCE WITH ASME B16.29. JOINTS SHALL BE SOLDERED WITH 95-5 SOLDER.

K. PRESSURE DRAIN PIPING TO BE COPPER TUBING, ASTM B88 TYPE L DRAWN. FITTINGS: ASME B16.18, CAST BRASS OR ASME B16.22 SOLDER WROUGHT COPPER. JOINTS: ASTM B32, SOLDERED WITH 95-5 LEAD FREE SOLDER.

L. INSTALL PIPE ESCUTCHEONS IN FINISHED SPACES FOR PIPE PENETRATIONS OF CONCRETE, MASONRY WALLS, WALL BOARD PARTITIONS AND SUSPENDED CEILINGS.

M. INSTALL SLEEVES FOR PIPING PASSING THROUGH INTERIOR CONCRETE WALLS, METAL WALLS, MASONRY WALLS, FIRE RATED GYPSUM WALLS, CONCRETE FLOORS AND ROOF SLABS. SLEEVES CAN BE STEEL SHEET METAL 24 GAUGE MINIMUM, SCHEDULE 40 GALVANIZED STEEL PIPE-ASTM A53-TYPE E-GRADE A, OR CAST IRON-ASTM A74.

N. PIPE PENETRATIONS THRU FIRE/SMOKE RATED ASSEMBLIES SHALL BE FIRE CAULKED AIRTIGHT TO ADJACENT STRUCTURE BY MEANS OF A U.L. OR FM APPROVED FIRE PROOF CAULKING MATERIAL CONFORMING TO THE CONSTRUCTION TYPE, PENETRATE TYPE, ANNULAR SPACE REQUIREMENTS, AND FIRE RATING.

O. PIPE PENETRATIONS THRU NON FIRE RATED ASSEMBLIES SHALL BE CAULKED AIRTIGHT BY MEANS OF APPROVED CAULKING MATERIAL. PROVIDE JOINT SEALERS, JOINT FILLER AND OTHER RELATED MATERIALS THAT ARE COMPATIBLE UNDER CONDITIONS OF APPLICATION. PROVIDE COLOR OF EXPOSED JOINT SEALERS TO CLOSELY MATCH FINISH COLOR OF ADJACENT SURFACES.

P. INSTALL PIPE LABELS ON EACH SYSTEM. INCLUDE ARROWS SHOWING NORMAL DIRECTION OF FLOW. LOCATE LABELS IN FINISHED SPACES, MECHANICAL ROOMS, ACCESSIBLE MAINTENANCE SPACES SUCH AS SHAFTS, TUNNELS, PLENUMS AND EXTERIOR NON CONCEALED LOCATIONS.

Q. BEFORE ANY INSULATION IS INSTALLED OR BEFORE PIPING IS COVERED OR TURNED OVER TO OWNER, ALL WATER PIPING SYSTEMS SHALL BE HYDROSTATICALLY TESTED AND PROVEN TIGHT AT NOT LESS THAN 125 PSIG AND MUST SHOW NO DROP IN PRESSURE IN A 2 HOUR PERIOD.

R. SANITARY SEWER AND VENT PIPING SHALL BE TESTED BY APPLYING A 10 FOOT HEAD OF WATER PRESSURE ABOVE THE HIGHEST LINE TO BE TESTED. THE SEGMENT OF THE SYSTEM BEING TESTED MUST HOLD WATER PRESSURE FOR ONE HOUR WITHOUT SHOWING A DROP IN LEVEL. ALL SEWER AND VENT PIPING LOCATED UNDERGROUND MUST BE TESTED BEFORE BACKFILLING.

S. WALL CLEANOUTS SHALL BE DURA COATED CAST IRON BODY, GAS AND WATER TIGHT ABS TAPERED THREAD PLUG AND ROUND SMOOTH STAINLESS STEEL ACCESS COVER WITH SECURING SCREW. MANUFACTURED BY ZURN OR EQUIVALENT.

T. FLOOR CLEANOUTS AND DOUBLE CLEANOUTS SHALL BE HEAVY DUTY DUCO CAST IRON CLEANOUT WITH ROUND ADJUSTABLE SCORIATED BRONZE TOP. CLOSURE PLUG TYPE. PIPE OUTLET SAME SIZE AS PIPE AND CONNECTION LIQUID - AIR TIGHT AND COMPATIBLE WITH PIPE. MANUFACTURED BY JR SMITH, ZURN OR EQUIVALENT.

U. PIPE HANGERS FOR WATER AND CONDENSATE PIPING SHALL CONFORM TO MSS SP-58; MATERIAL AND DESIGN OF PIPE SUPPORTS, MSS SP-69: SELECTION AND APPLICATION OF PIPE SUPPORTS, AND MSS SP-89: FABRICATION AND INSTALLATION OF PIPE SUPPORTS.

V. PIPE HANGERS FOR SEWER AND VENT PIPING SHALL SHALL CONFORM TO MSS SP-58; MATERIAL AND DESIGN OF PIPE SUPPORTS, MSS SP-69: SELECTION AND APPLICATION OF PIPE SUPPORTS, AND MSS SP-89: FABRICATION AND INSTALLATION OF PIPE SUPPORTS.

W. PIPING SHALL BE SUPPORTED WITH HANGERS, ANCHORS AND SUPPORTS DESIGNED TO CARRY THE LOAD OF THE PIPE FULL OF FLUID, AND SHALL RESIST GALVANIC ACTION. SECURE UPPER ATTACHMENTS TO STRUCTURE. DO NOT SUPPORT FROM THE ROOF DECK. SUPPORT INTERVALS AND ROD SIZE AS FOLLOWS:

COPPER TUBE HORIZONTAL PIPING:

¾" THRU 1½"	MAX 6 FEET	⅜" ROD
2" AND LARGER	MAX 10 FEET	⅜"ROD UP TO 2", ½" ROD FOR 2" THRU 3" PIPE, ⅝" ROD FOR 4" THRU 5" PIPE

SCH. 40 STEEL HORIZONTAL PIPING:

¾"	MAX 6 FEET	⅜" ROD
¾"-1"	MAX 8 FEET	⅜" ROD
1¼"	MAX 10 FEET	½" ROD FOR 2.5" THRU 3" PIPE, ⅝" ROD FOR 4" THRU 5" PIPE, ¾"ROD FOR 6" PIPE

HORIZONTAL CAST IRON (ALL SIZES)	MAX 5 FEET	⅝" ROD
HORIZONTAL CAST IRON WITH 10' LENGTH	MAX 10 FEET	⅝" ROD
PVC (ALL SIZES)	MAX 4 FEET	⅜"ROD UP TO 4", ½" ROD FOR 5" THRU 8" PIPE, ⅝" ROD FOR 10" THRU 12" PIPE

PLUMBING SCHEDULE

WC1 — WATER CLOSET (ADA-LEFT HANDED) : FLOOR MOUNTED, ELONGATED, PRESSURE ASSISTED LOW CONSUMPTION SIPHON JET, TWO-PIECE TANK TYPE, 12" ROUGH-IN, 2 BOLT CAPS, VITREOUS CHINA. BOWL RIM AT 16.5" AFF. 1.6 GPF. MFG: AMERICAN STANDARD NO. 2467.016 "CADET RIGHT HEIGHT ELONGATED PRESSURE ASSISTD TOILET" SEAT: SOLID PLASTIC, OPEN FRONT, FIREPROOF, ELONGATED, WITHOUT COVER, STAINLESS STEEL CHECK HINGE. MFG: OLSONITE NO. 10 CC. TRIP LEVER ON LEFT AS YOU FACE TOILET. SUPPLY: 1/2" SWEAT WHEEL HANDLE ANGLE STOP WITH 3/8" O.D. FLEX RISER, CHROME PLATED FINISH. MFG: MCGUIRE. SERVICE REQUIREMENTS: 4" SEWER, 2" VENT, 1/2" CW.

WC2 — WATER CLOSET (ADA-RIGHT HANDED) : FLOOR MOUNTED, ELONGATED, PRESSURE ASSISTED LOW CONSUMPTION SIPHON JET, TWO-PIECE TANK TYPE, 12" ROUGH-IN, 2 BOLT CAPS, VITREOUS CHINA. BOWL RIM AT 16.5" AFF. 1.6 GPF. MFG: AMERICAN STANDARD NO. 2467.016 "CADET RIGHT HEIGHT ELONGATED PRESSURE ASSISTD TOILET" SEAT: SOLID PLASTIC, OPEN FRONT, FIREPROOF, ELONGATED, WITHOUT COVER, STAINLESS STEEL CHECK HINGE. MFG: OLSONITE NO. 10 CC. TRIP LEVER ON RIGHT AS YOU FACE TOILET. SUPPLY: 1/2" SWEAT WHEEL HANDLE ANGLE STOP WITH 3/8" O.D. FLEX RISER, CHROME PLATED FINISH. MFG: MCGUIRE. SERVICE REQUIREMENTS: 4" SEWER, 2" VENT, 1/2" CW.

LAV1 — LAVATORY (ADA): UNDER COUNTER MOUNT, VITREOUS CHINA, 19"WIDE,15.375" FRONT TO BACK. MFG: AMERICAN STANDARD NO. 0497.221, OVALYN. FAUCET: DECK MOUNTED, SINGLE METAL LEVER HANDLE. ADA. FURNISH WITH 0.5 GPM MAX FLOW OUTLET. FAUCET: CHICAGO 3511-E2805AB. DRAIN: BRASS SEMI CAST GRID WITH TAILPIECE. MFG: McGUIRE. SUPPLIES: STANDARD LOOSE KEY, ⅜" COMPRESSION x ⅜" OD STOP VALVE, FLEXIBLE RISERS, CHROME PLATED. MFG: MCGUIRE. TRAP: 11/4" IN x 11/2" OUT, CHROME PLATED, ADJUSTABLE, SEMI-CAST TRAP. MFG: MCGUIRE. MOUNTING HEIGHT: SEE ARCHITECTURAL DRAWINGS. NOTE: HOT WATER SUPPLY LINE AND WASTE SHALL BE INSULATED WITH FACTORY PREMOLDED INSULATION. MFG: TRUEBRO LAVGUARD 2. SERVICE REQUIREMENTS: 1½" S , 1½" V ,½" CW AND ½" HW.

SHW1 — SHOWER (ADA): ADA COMPLIANT IN WALL SHOWER TO FIT IN A 3'x3' STALL, STANDARD FIXED DIRECTION ADJUSTABLE SPRAYHEAD, LEVER HANDLE OPERATION DIVERTER VALVE, HAND HELD SHOWER SPRAY WITH ON-OFF CONTROL, 60" STAINLESS FLEXIBLE HOSE, ELEVATED IN LINE BACKFLOW PREVENTOR, 2.0 GPM FLOW CONTROL, L-SHAPED GRAB BAR, BARRIER FREE SEAT, SHOWER CURTAIN. REFER TO ARCHITECTURAL DRAWINGS FOR ADA MOUNTING HEIGHTS AND BUILT IN CONFIGURATION. MFG: BRADLEY HN300. FURNISH SHOWER WITH 5"x5" GRID DRAIN, CAST IRON BODY, CLAMPING DEVICE ADJUSTABLE COLLAR. BRONZE PLATED GRID STRAINER, DEEP SEAL P-TRAP, 2" OUTLET AS SHOWN ON DRAWINGS. MFG: ZURN Z415S. PROVIDE SURESEAL INLINE TRAP SEAL, SIZE AND TYPE TO FIT DRAIN.

SINK1 — KITCHEN SINK : DOUBLE COMPARTMENT, UNDERMOUNT, #16 GAUGE, 304 NICKEL BEARING STAINLESS STEEL ,10" DEEP. OVERALL: 30.75"X18.5". INSIDE BOWLS: 13.5"x16" EACH. MFG: ELKAY EFU31180TC OR EQUIVALENT. FAUCET: DECK MOUNTED 8" CENTERS GOOSENECK FAUCET W/ LEVER HANDLES, GOOSENECK SPOUT, 1.5 GPM LAMINAR FLOW OUTLET, AND SPRAY. MFG: CHICAGO 200-AGN8AE35-317AB.
DRAIN: FURNISH W/ 3.5" GRID DRAIN AND TAILPIECE 1ST COMPARTMENT. MFG: ELKAY LK18. FURNISH WITH BASKET STRAINER AND TAILPIECE 2ND COMPARTMENT. MFG: ELKAY LK35.
SUPPLIES: STANDARD LOOSE KEY, ⅜" COMPRESSION x ⅜" OD STOP VALVE, FLEXIBLE RISERS, CHROME PLATED. MFG: MCGUIRE.
TRAP: 1-1/2" IN X 1-1/2" OUT, CHROME PLATED, ADJUSTABLE, SEMI-CAST P-TRAP. MFG: MCGUIRE.
MOUNTING HEIGHT: SEE ARCHITECTURAL DRAWINGS.
FURNISH WITH WASTE DISPOSER:CONTINUOUS FEED, ON-OFF WALL SWITCH, 0.75 HP, 120V-1PH-60HZ, 9.52 AMPS, STAINLESS STEEL CONSTRUCTION, PERMANENTLY LUBRICATED, DISHWASHER DRAIN CONNECTION, 7 YEAR WARRANTY ON PARTS, 1 YEAR WARRANTY ON LABOR. MFG: IN-SINK-ERATOR MODEL NO. PRO 750
SERVICE REQUIREMENTS: 2"S , 2" V, 1/2" CW AND 1/2" HW.

SINK2 — SINK (ADA): SINGLE COMPARTMENT, UNDERMOUNT, #16 GAUGE, 304 NICKEL BEARING STAINLESS STEEL ,6" DEEP. OVERALL: 10"X20.5". INSIDE BOWL: 7.5"x18". MFG: ELKAY EFRU718T OR EQUIVALENT. FAUCET: FAUCET: DECK MOUNTED 8" CENTERS GOOSENECK FAUCET W/ VANDAL PROOF WRIST BLADE HANDLES, RIGID/SWING GOOSENECK SPOUT, 1.5 GPM FLOW OUTLET. MFG: CHICAGO 200-AGN8AE35-317AB.
FURNISH W/ 3.5" GRID DRAIN AND TAILPIECE.. SUPPLIES: STANDARD LOOSE KEY, ⅜" COMPRESSION x ⅜" OD STOP VALVE, FLEXIBLE RISERS, CHROME PLATED. MFG: MCGUIRE.
TRAP: 1-1/2" IN X 1-1/2" OUT, CHROME PLATED, ADJUSTABLE, SEMI-CAST P-TRAP. MFG: MCGUIRE.
MOUNTING HEIGHT: SEE ARCHITECTURAL DRAWINGS.
NOTE: HOT WATER SUPPLY LINE AND WASTE SHALL BE INSULATED WITH FACTORY PREMOLDED INSULATION. MFG: TRUEBRO LAVGUARD 2.
FURNISH WITH WASTE DISPOSER:CONTINUOUS FEED, ON-OFF WALL SWITCH, 0.75 HP, 120V-1PH-60HZ, 9.52 AMPS, STAINLESS STEEL CONSTRUCTION, PERMANENTLY LUBRICATED, DISHWASHER DRAIN CONNECTION, 7 YEAR WARRANTY ON PARTS, 1 YEAR WARRANTY ON LABOR. MFG: IN-SINK-ERATOR MODEL NO. PRO 750
SERVICE REQUIREMENTS: 2"S , 2" V, 1/2" CW AND 1/2" HW. FURNISH WITH GLASS FILLER MFG: CHICAGO 712-ABCP WIH IN LINE WATER FILTER. IN LINE WATER FILTER LOCATED BELOW COUNTER.

SINK3 — UTILITY SINK :SINGLE COMPARTMENT, 16 GAUGE, 304 STAINLESS STEEL, GALVANIZED TUBULAR LEGS. 24" LONG X 24.5" WIDE. TWO FAUCET HOLES ON 8" CENTERS. MFG: ADVANCE TABCO 6-1-18. FURNISH WITH HEAVY DUTY 14" SWING FAUCET. MFG: ADVANCE TABCO K-105. SUPPLIES: STANDARD LOOSE KEY,⅜" COMPRESSION x ⅜" OD STOP VALVE, FLEXIBLE RISERS, CHROME PLATED. MFG: MCGUIRE. 1-1/2" IN X 1-1/2" OUT, CHROME PLATED, ADJUSTABLE, SEMI-CAST P-TRAP. MFG: MCGUIRE.
SERVICE REQUIREMENTS: 1.5"S , 1.5" V, 1/2" CW AND 1/2" HW.

MB1 — MOP BASIN: FLOOR MOUNTED, MOLDED STONE 24"X24"X10",CHROME FAUCET WITH LEVER HANDLES, VACUUM BREAKER, RUBBER HOSE AND WALL HOOK. MFG: FIAT MSB2424 FAUCET: POLISHED CHROME WALL MOUNTED AT 42" A.F.F., WALL BRACE, VACUUM BREAKER, INTEGRAL STOPS. MFG: FIAT #830-AA. DRAIN: INTEGRAL WITH STRAINER. TRAP: 3" CAST IRON P-TRAP. ACCESSORIES: FIAT #889-CC MOP HANGER AND FIAT#832-AA HOSE BRACKET AND HOSE. SERVICE REQUIREMENTS: 1/2" COLD WATER, 1/2" HOT WATER, 3" SEWER, 2" VENT.

3"FS1 — FLOOR SINK: 16" X 16" X 7" DEEP CAST IRON WITH WHITE ACID RESISTING ENAMEL BODY INTERIOR, ALUMINUM SEDIMENT BUCKET, ⅜" SQUARE NICKEL BRONZE ⅜ TOP GRATE, NO SEEPAGE PAN. OUTLET AS INDICATED ON DRAWINGS. MFG: ZURN Z1920. PROVIDE SURESEAL INLINE TRAP SEAL, SIZE AND TYPE TO FIT DRAIN.

3"FD1 — FLOOR DRAIN: CAST IRON BODY, CLAMPING DEVICE, ADJUSTABLE COLLAR, 5"x5" SQUARE, BRONZE PLATED GRID STRAINER, DEEP SEAL P-TRAP, 2" OUTLET AS SHOWN ON DRAWINGS. MFG: ZURN Z415S. PROVIDE SURESEAL INLINE TRAP SEAL, SIZE AND TYPE TO FIT DRAIN.

HB1 — HOSE BIB: EXPOSED ANTI-SIPHON WALL FAUCET FOR USE IN MODERATE CLIMATE INSTALLATION. COMPLETE WITH Z1399-VB EXTERNAL VACUUM BREAKER, ALL BRONZE INTERIOR COMPONENTS, METAL HANDLE, ROUGH BRONZE EXTERIOR. ¾" INLET, ¾" MALE HOSE CONNECTION. MFG: ZURN Z1341-T34-CM. FURNISH WITH CHROME PLATED ROUGH CAST BRONZE HINGED COVER WITH LOOSE KEY. MFG: ZURN Z1341-BOX-CL

ET1 — EXPANSION TANK: PRE-PRESSURIZED TANK WITH SEALED IN AIR CHARGE OF 55 PSI. VOLUME SIZE: 4.4 GAL.,3.2 MAX ACCEPTANCE FACTOR, 175 PSIG MAXIMUM WORKING FACTOR. 200°F MAXIMUM OPERATING TEMPERATURE. MFG: AMTROL NO. ST-12.

TMV1 — THERMOSTATIC MIXING VALVE: THERMIXER THERMOSTATIC MIXING VALVE BODY CONSTRUCTION SHALL BE BRASS AND BRONZE WITH BRASS AND FLOW CONTROL COMPONENTS, 360° HANDLE ADJUSTMENT FOR EASE OF TEMPERATURE SELECTION. VANDAL RESISTANT LOCKABLE HANDLE FEATURE TO PREVENT UNAUTHORIZED TAMPERING. 22 GPM AT 5 PSI DROP. INCLUDE PIPING ASSEMBLY, THERMOMETER. 1" INLET, 1 ¼" OUTLET, ROUGH NICKEL FINISH, TEMPERATURE SET AT 110°F. FURNISH WITH CHECK STOPS. MFG: SYMMONS MODEL#7-500-A.

WB1 — WASHER BOX-1: OATEY 38970, 2" SEWER CONNECTION, ¼ TURN, ½"HW AND ½"CW VALVES WITH MOUNTED WATER HAMMER ARRESTOR AND WASHER BOX FABRICATED OF MOLDED PLASTIC.

RPBP — REDUCED PRESSURE BACKFLOW PREVENTOR: 1.5" NPT END CONNECTIONS, TWO INDEPENDENT SPRING LOADED Y PATTERN CHECK VALVE, RELIEF VALVE BODY AND COVER SHALL BE BRONZE, UNIT SHALL BE APPROVED BY THE FOUNDATION FOR CROSS CONNECTION CONTROL AND HYDRAULIC RESEARCH AT THE UNIVERSITY OF SOUTHERN CALIFORNIA, UNIT SHALL BE APPROVED BY AWWA C511 CONFORMANCE. INCLUDE FULL PORT BALL VALVES AND TEST COCKS. MFG: FEBCO 825Y.

HOT WATER CIRCULATOR

HWC1 — HOT WATER CIRCULATOR: ¾" SWEAT CONNECTIONS, ALUMINUM AND STAINLESS STEEL CONSTRUCTION, SINGLE SPEED, 2590 RPM, 1/25 HP, 85 WATTS, 115V-1PH-60HZ, 3 GPM CAPACITY AT 13 FT HD WITH TIME CLOCK (120V-1VA) NEXT TO PUMP AND ENGRAVED PHENOLIC RESIN NAMEPLATE ATTACHED READING: "HOT WATER RECIRCULATOR CONTROL". MFG: GRUNDFOS MODEL NO. UP15-42B7.

DOMESTIC WATER HEATER

DWH1 — DOMESTIC WATER HEATER: ELECTRIC, 119 GALLON, 5.5 KW/5.5 KW, 11 KW SIMULTANEOUSLY, 240V-1PH. MFG: STATE 12020ORT.

DOMESTIC WATER BOOSTER PUMP WITH EXPANSION TANK

BP1 — DOMESTIC WATER BOOSTER PUMP: GRUNDFOS CRE 5-5 AN-B-A-E-HQQE, 25 GPM, 115.5 FT HD, 5 STAGES, 5 IMPELLARS, VERTICAL PUMP ORIENTATION, CAST IRON, STAINLESS STEEL IMPELLAR, VARIABLE SPEED, FURNISH WITH INTEGRATED VFD AND PRESSURE SENSOR, FURNISH WITH 1.25" SIMMONS CHECK VALVE, 2 HP, 240V-1PH. 1.25" NPT CONNECTIONS. FURNISH WITH UPSTREAM AND DOWNSTREAM PRESSURE GAUGES.

ET2 — EXPANSION TANK: PRE-PRESSURIZED TANK AT FACTORY SETTING OF 38 PSIG, HIGH STRENGTH STEEL, HEAVY DUTY BUTYL DIAPHRAGM, ANTIMICORBIAL LINER, STAINLESS STEEL SYSTEM CONNECTION, CONTROLS PUMP CYCLING IN BOOSTER PUMP WATER APPLICATIONS, 4.4 GALLONS. MFG: WELL X TROL WX-102.

FIRE BOOSTER PUMP- CONCEPTUAL ONLY - TO BE FINALIZED BY FIRE SPRINKLER CONTRACTOR BASED ON HYDRAULIC CALCULATIONS

FP1 — FIRE BOOSTER PUMP: FURNISHED BY FIRE PROTECTION CONTRACTOR. 2x2x8B VIP, 100 GPM, 63 PSIG, 240V/1PH/60HZ, 15 HP. MFG: PATTERSON PUMP COMPANY 2x2x8B. FURNISH PACKAGE PUMP SKID TO INCLUDE: BASE ASSEMBLY FOR REFERENCED PUMP, TOMATECH GPL CONTROLLER, PUMP STAND, 2 PRESSURE GAUGES, CASING RELIEF ASSEMBLY, 4 - 2" OSY VALVES, 2-2" CHECK VALVES. MFG: PATTERSON PUMP COMPANY OR EQUIVALENT.

MOLZENCORBIN
2701 Miles Road SE
Albuquerque, New Mexico 87106
505 242 5700 office
505 242 0673 fax
MolzenCorbin.com

NUMERIC SCALE CONFIRMATION
DRAWINGS ARE DEPICTED AT INTENDED NUMERIC SCALES
IF THIS BAR EQUALS ONE INCH

PAUL M. ROMERO — NEW MEXICO — 14932 — REGISTERED PROFESSIONAL ENGINEER
06-12-19

REV NO	REV DATE	DESCRIPTION

PROJECT NUMBER:	SFC182-11
DESIGNED BY:	PMR
DRAWN BY:	PMR
CHECKED BY:	PMR
PRIME DESIGN PROFESSIONAL:	JOHN Q. PATE
PROJECT DATE:	MAY 2019

PLUMBING SCHEDULES

LA PUEBLA FIRE STATION ADDITION
SANTA FE COUNTY
LA PUEBLA, NEW MEXICO

P-601
SHEET

© COPYRIGHT

PLOT DATE: 6/11/2019 1:53 PM
SAVE DATE: 6/10/2019 4:01 PM
C:\USERS\PRIMARY\DOCUMENTS\CORTPLO\LA PUEBLA FIRE STATION\DWGS\P-601

KEYED NOTES

1. RELOCATE EXISTING OUTDOOR CONDENSER. SEE M-101.
2. REMOVE EXISTING REFRIGERANT LINE SET.
3. REMOVE EXISTING EXTERIOR WALL VENT.
4. EXISTING FACILITY. NO NEW HVAC WORK.

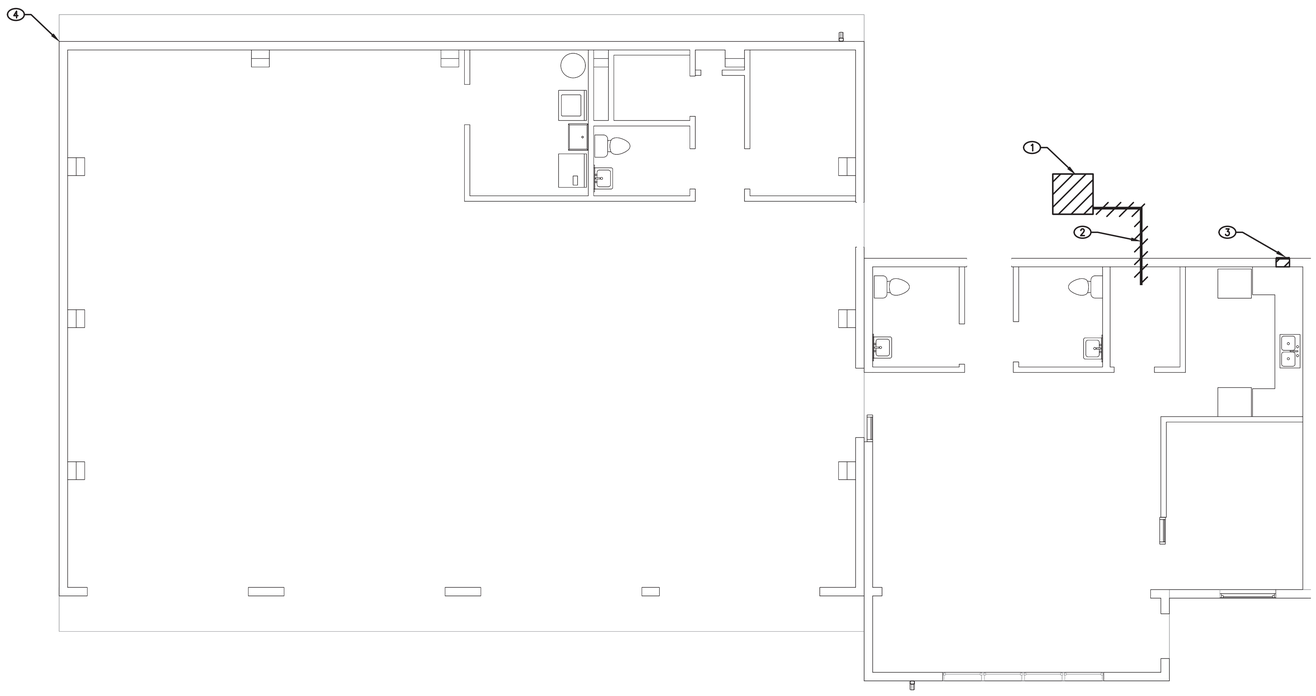

HVAC PLAN–DEMO

SCALE: 3/16"=1'-0"

N

0 1' 2' 4' 8' 12'

3/16"=1'-0"

MOLZENCORBIN

2701 Miles Road SE
Albuquerque, New Mexico 87106
505 242 5700 office
505 242 0673 fax
MolzenCorbin.com

NUMERIC SCALE CONFIRMATION

DRAWINGS ARE DEPICTED AT INTENDED NUMERIC SCALES
IF THIS BAR EQUALS ONE INCH

PAUL M. ROMERO
NEW MEXICO
14932
REGISTERED PROFESSIONAL ENGINEER

06-12-19

REV NO	REV DATE	DESCRIPTION

PROJECT NUMBER: SFC182-11
DESIGNED BY: PMR
DRAWN BY: PMR
CHECKED BY: PMR
PRIME DESIGN PROFESSIONAL: JOHN Q. PATE
PROJECT DATE: MAY 2019

HVAC PLAN - DEMO

LA PUEBLA FIRE STATION ADDITION
SANTA FE COUNTY
LA PUEBLA, NEW MEXICO

M-101D

SHEET

PLOT DATE: 6/11/2019 1:55 PM
SAVE DATE: 6/10/2019 4:01 PM
C:\USERS\PROMERO\DOCUMENTS\PORTFOLIO\LA PUEBLA FIRE STATION\DWGS\MLP-1010

© COPYRIGHT

KEYED NOTES

8. THERMOSTAT PROVIDED AND INSTALLED BY ELECTRICAL CONTRACTOR. SEE ELECTRICAL DRAWINGS FOR FURTHER DETAIL.
9. PROVIDE AND INSTALL SUPPLY GRILLE. SIZE AS INDICATED ON PLANS. TEST AND BALANCE TO CFMS INDICATED ON PLANS. TYPICAL OF THIS SYMBOL ON THIS SHEET.
10. PROVIDE AND INSTALL RETURN GRILLE. SIZE AS INDICATED ON PLANS. TYPICAL OF THIS SYMBOL ON THIS SHEET.
11. 10x10 EXHAUST DUCT THRU ROOF. TERMINATE WITH ROOF VENT AT AROUND 12" ABOVE ROOF LINE.
12. PROVIDE AND INSTALL FIRE DAMPER. PROVIDE AND INSTALL WITH DUCT ACCESS PANEL FOR INSPECTION. TYPICAL OF 10 ON THIS SHEET.

KEYED NOTES

1. RELOCATE EXISTING CONDENSER ON EXISTING ROOF. PROVIDE AND INSTALL ON 4" THICK PAD.
2. PROVIDE AND INSTALL REFRIGERANT LINES SET FROM EXISTING CONDENSER TO EXISTING INDOOR COIL UNIT. INSTALL PER MANUFACTURER'S REQUIREMENTS. SEAL ALL ROOF PENETRATIONS WEATHER TIGHT.
3. PROVIDE AND INSTALL ROOF TOP UNIT. SIZE AS INDICATED ON EQUIPMENT SCHEDULE.
4. PROVIDE AND INSTALL CEILING EXHAUST FAN. SIZE AS INDICATE ON EQUIPMENT SCHEDULE.
5. PROVIDE AND INSTALL UNIT HEATER. SIZE AS INDICATED ON EQUIPMENT SCHEDULE. BOTTOM OF UNIT LOCATED AROUND 7'7" ABOVE FINISHED FLOOR.
6. THERMOSTAT FURNISHED WITH ROOF TOP UNIT AND WIRED BY ELECTRICAL CONTRACTOR. SEE SEQUENCE OF CONTROLS AND ELECTRICAL DRAWINGS FOR FURTHER DETAIL.
7. OCCUPANCY SENSOR OR ON/OFF SWITCH PROVIDED AND INSTALLED BY ELECTRICAL CONTRACTOR. SEE ELECTRICAL DRAWINGS FOR FURTHER DETAIL.

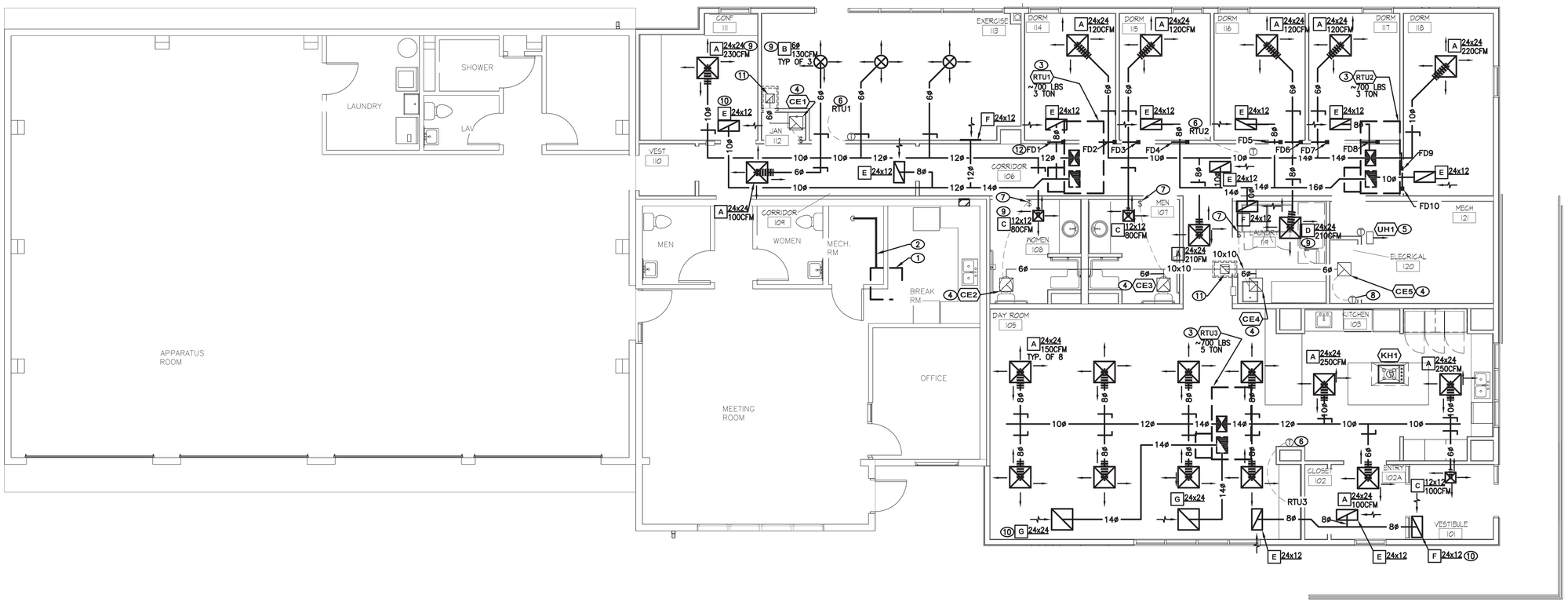

HVAC PLAN

SCALE: 3/16"=1'-0"

N

0 1' 2' 4' 8' 12'
3/16"=1'-0"

MOLZENCORBIN
2701 Miles Road SE
Albuquerque, New Mexico 87106
505 242 5700 office
505 242 0673 fax
MolzenCorbin.com

NUMERIC SCALE CONFIRMATION
DRAWINGS ARE DEPICTED AT INTENDED NUMERIC SCALES
IF THIS BAR EQUALS ONE INCH

PAUL M. ROMERO
NEW MEXICO
14932
REGISTERED PROFESSIONAL ENGINEER
06-12-19

REV NO	REV DATE	DESCRIPTION

PROJECT NUMBER: SFC182-11
DESIGNED BY: PMR
DRAWN BY: PMR
CHECKED BY: PMR
PRIME DESIGN PROFESSIONAL: JOHN Q. PATE
PROJECT DATE: MAY 2019

HVAC PLAN

LA PUEBLA FIRE STATION ADDITION
SANTA FE COUNTY
LA PUEBLA, NEW MEXICO

M-101
SHEET

PLOT DATE: 6/11/2019 1:57 PM
SAVE DATE: 6/10/2019 3:58 PM
C:\USERS\PROMERO\DOCUMENTS\PORTFOLIO\LA PUEBLA FIRE STATION\DWGS\M\P-101

© COPYRIGHT

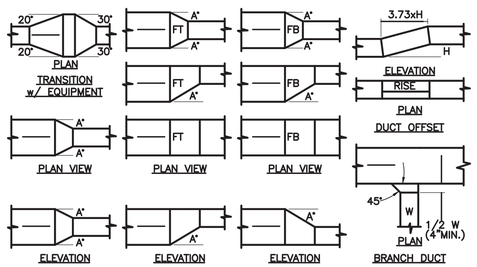

NOTES

1. ANGLE A=30° MAXIMUM WHEN AIR FLOWS IN DIRECTION OF ARROW. (SUPPLY AIR)
2. ANGLE A=15° WHEN AIR FLOWS IN OPPOSITE DIRECTION OF ARROW (R.A. OR EXHAUST)

A LOW VELOCITY DUCT FITTING DETAIL

SCALE = NONE

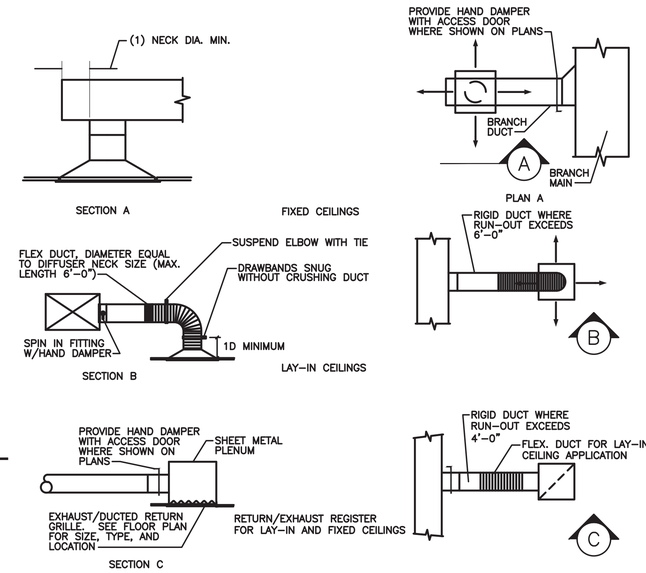

B DIFFUSER AND REGISTER CONNECTION DETAIL

SCALE = NONE

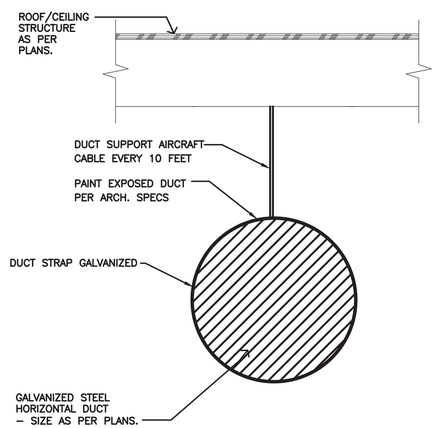

C ROUND DUCT SUPPORT DETAIL

SCALE = NONE

MOLZENCORBIN

2701 Miles Road SE
Albuquerque, New Mexico 87106
505 242 5700 office
505 242 0673 fax
MolzenCorbin.com

NUMERIC SCALE CONFIRMATION

DRAWINGS ARE DEPICTED AT INTENDED NUMERIC SCALES
IF THIS BAR EQUALS ONE INCH

PAUL M. ROMERO
NEW MEXICO
14932
REGISTERED PROFESSIONAL ENGINEER
06-12-19

REV NO	REV DATE	DESCRIPTION

PROJECT NUMBER: SFC182-11
DESIGNED BY: PMR
DRAWN BY: PMR
CHECKED BY: PMR
PRIME DESIGN PROFESSIONAL: JOHN Q. PATE
PROJECT DATE: MAY 2019

MECHANICAL DETAILS

LA PUEBLA FIRE STATION ADDITION
SANTA FE COUNTY
LA PUEBLA, NEW MEXICO

M-501

SHEET

© COPYRIGHT

PLOT DATE: 6/11/2019 1:57 PM
SAVE DATE: 6/10/2019 4:01 PM
C:\USERS\PROMERO\DOCUMENTS\PORTFOLIO\LA PUEBLA FIRE STATION\DWGS\MLP-501

HVAC LEGEND

SYMBOL	DESCRIPTION
	HVAC DUCTWORK
	AIR SUPPLY DIFFUSER
	RETURN AIR GRILLE EXHAUST AIR GRILLE
	SUPPLY DUCT PENETRATION THRU ROOF RETURN DUCT PENETRATION THRU ROOF ROUND DUCT PENETRATION THRU ROOF
	FLEXIBLE DUCT
	SIDEWALL EXHAUST OR RETURN AIR GRILLE SIDEWALL SUPPLY REGISTER
	SINGLE LINE DUCT AND FITTINGS
	DUCT CAP
24x12 12ø	INDICATES A 24" WIDEx12" DEEP DUCT INDICATES A 12" ROUND DUCT
T S $ SD	THERMOSTAT, SENSOR, SWITCH, DUCT DETECTOR
	MANUAL OR SPIN IN DAMPER
	FIRE DAMPER
	FIRE-SMOKE DAMPER
	MISCELLANEOUS
RTU-1	EQUIPMENT/FIXTURE LIST DESIGNATION
	KEYED CONSTRUCTION NOTE
A 24x24 100 CFM	LETTER IN SYMBOL REFERS TO GRILLE, REGISTER OR EQP. TYPE IDENTIFIED IN THE EQP. SCHEDULE. INDICATES SIZE OF GRILLE INDICATES CFM
A1 NAME SCALE	NUMBER IN SYMBOL REFERS TO DETAIL # INDICATES NAME OF DETAIL
	FLOW ARROW
	BREAK OR CONTNUATION
	NEW TO EXISTING CONNECTION

HVAC GENERAL NOTES

A. CONTRACTORS AND SUB-CONTRACTORS SHALL CAREFULLY REVIEW THE CONSTRUCTION DOCUMENTS. INFORMATION REGARDING THE COMPLETE WORK IS DISPERSED THROUGHOUT THE DOCUMENT SET AND CANNOT BE ACCURATELY DETERMINED WITHOUT REFERENCE TO THE COMPLETE DOCUMENT SET.

B. COORDINATE WITH THE WORK OF OTHER TRADES, EQUIPMENT FURNISHED BY OTHERS, REQUIREMENTS OF THE OWNER, AND WITH THE CONSTRAINTS OF THE CONDITIONS AT THE PROJECT SITE.

C. DRAWINGS FOR HVAC WORK ARE DIAGRAMMATIC, SHOWING THE GENERAL LOCATION, TYPE, LAYOUT, AND EQUIPMENT REQUIRED. PROVIDE, DUCTWORK, CONNECTIONS, ACCESSORIES, OFFSETS, CONTROLS AND MATERIALS NECESSARY FOR A COMPLETE FUNCTIONAL SYSTEM INSTALLATION.

D. ALL NEW DUCT DIMENSIONS SHOWN ON DRAWINGS ARE NET INSIDE DIMENSIONS.

E. EXACT LOCATION OF ALL GRILLES, DIFFUSERS, AND REGISTERS SHALL BE COORDINATED WITH REFLECTIVE CEILING PLAN. WHERE INSTALLATION CONFLICTS, FINAL LOCATIONS SHALL BE APPROVED AND OBTAINED FROM ARCHITECT.

F. ALL JOINTS AND SEAMS ON SUPPLY, OUTSIDE AIR, RETURN AND AND EXHAUST DUCTS, ROUND OR RECTANGULAR, MUST BE SEALED AIR TIGHT PER SMACNA STANDARDS, CONSTRUCT ALL DUCTS, CASINGS, PLENUMS, ETC., FROM GALVANIZED STEEL SHEETS. SHEETS SHALL BE FREE OF BLISTERS, SLIVERS, PITS, AND IMPERFECTLY GALVANIZED SPOTS. REINFORCING ANGLES AND BARS, AND DUCT SUPPORT MATERIALS SHALL BE GALVANIZED STEEL. DUCT CONSTRUCTION AND GAUGES SHALL BE PER SMACNA STANDARDS. DUCT JOINTS FOR LOW PRESSURE DUCTWORK SHALL BE SEALED TO MEET 1" WC PRESSURE CLASSIFICATION. SEAL ALL TRANSVERSE JOINTS WITH IRON GRIP 601 AS MANUFACTURED BY HARDCAST PER MANUFACTURER'S INSTRUCTIONS. DUCT TAPE IS NOT AN ACCEPTABLE MEANS OF SEALING DUCTS. EXCEPTION: DO NOT SEAL EXPOSED DUCTWORK.

G. COORDINATE WITH OTHER TRADES TO AVOID CONFLICTS AND MAINTAIN SERVICEABILITY TO VALVES AND EQUIPMENT.

H. PROVIDE ACCESS PANELS OR DOORS AS REQUIRED AT INACCESSIBLE CEILINGS AND/OR CHASES FOR ALL VALVES, TRAPS, DAMPERS, CLEANOUTS, AND CONTROLS.

I. DUCTWORK OR PIPE PENETRATIONS THRU ASSEMBLIES SHALL BE CAULKED AIRTIGHT BY MEANS OF A APPROVED CAULKING MATERIAL.

J. SUPPORTS FROM ROOF DECK ARE NOT PERMITTED. ALL PIPING SHALL BE RIGIDLY SUPPORTED FROM THE BUILDING STRUCTURE BY MEANS OF HANGER ASSEMBLIES PROPERLY SELECTED AND SIZED FOR THE APPLICATION IN ACCORDANCE WITH THE MANUFACTURER'S RECOMMENDATIONS AND SPECIFICATIONS.

K. DUCT PENETRATIONS THRU ROOF SHALL BE CURBED, FLASHED AND COUNTER FLASHED TO ACHIEVE A WATERTIGHT CONSTRUCTION. COORDINATE ALL ROOF PENETRATIONS WITH ROOFING CONTRACTOR.

L. FACTORY ROOF CURBS SHALL BE PROVIDED FOR MECHANICAL ROOF PENETRATIONS BY MECHANICAL CONTRACTOR. FLASHINGS ARE TO BE INSTALLED BY ROOFING CONTRACTOR.

M. ALL ROUND AND SQUARE BRANCH RUN OUTS AND DROPS TO DIFFUSERS/GRILLES SHALL BE THE SAME NOMINAL SIZE AS THE SCHEDULED DIFFUSER NECK SIZE.

N. FLEX DUCT SHALL NOT EXCEED 6 FEET IN LENGTH.

O. FURNISH TURNING VANES ON ALL SQUARE SUPPLY ELBOWS.

P. CONTRACTOR SHALL PROVIDE RETURN AIR OR TRANSFER AIR BOOT OPENINGS IN FULL HEIGHT WALLS SIZED AT 300 FPM WHERE CEILING CAVITY IS UTILIZED AS A RETURN AIR PLENUM--AS APPLICABLE.

Q. TEST AND BALANCE HVAC SYSTEMS TO AIR FLOWS INDICATED ON PLANS. AIR OUTLETS AND INLETS ARE REQUIRED TO BE ADJUSTED WITHIN 5% OF THE DESIGN. AIR HANDLING EQUIPMENT IS REQUIRED TO BE ADJUSTED WITHIN 5 PERCENT OF DESIGN SUPPLY AND PLUS OR MINUS 5 PERCENT OF DESIGN FOR RETURN AND EXHAUST SYSTEMS. TAB AGENCY SHALL PERFORM THE WORK IN ACCORDANCE WITH THE LATEST EDITION OF AABC OR NEBB PROCEDURAL STANDARDS FOR TAB OF ENVIRONMENTAL SYSTEMS.

R. IDENTIFY AIR HANDLING UNITS, EXHAUST FANS, HEAT TRANSFER EQUIPMENT DEVICES WITH NAMEPLATES. IDENTIFY DUCTWORK WITH PLASTIC NAMEPLATES. IDENTIFY WITH AIR HANDLING UNIT IDENTIFICATION NUMBER AND AREA SERVED. LOCATE IDENTIFICATION AT AIR HANDLING UNIT, AT EACH SIDE OF PENETRATION OF STRUCTURE OR ENCLOSURE, AND AT EACH OBSTRUCTION.

S. PROVIDE CEILING TACKS TO LOCATE DAMPERS ABOVE T-BAR TYPE PANEL CEILINGS. LOCATE IN CORNER OF PANEL CLOSEST TO EQUIPMENT. CEILING TACKS SHALL BE STEEL WITH ¾" DIAMETER COLOR CODED HEAD. YELLOW FOR HVAC EQUIPMENT AND RED FOR FIRE DAMPERS.

T. ALL DUCT CONNECTIONS TO FAN DIRVEN UNITS SHALL BE MADE WITH 4 INCH LONG FIRE PROOF FLEXIBLE DUCT CONNECTOR FOR VIBRATION SOUND INSULATION.

SEQUENCE OF OPERATIONS

ROOF TOP UNITS (RTU1 THRU RTU3):

MECHANICAL CONTRACTOR TO FURNISH PROGRAMMABLE THERMOSTAT WITH UNIT AND ELECTRICAL CONTRACTOR TO INSTALL. UNIT SHALL OPERATE PER ITS OWN FACTORY CONTROLS. FURNISH THERMOSTAT WITH LOCKABLE PROGRAMMABLE FEATURE OR PLASTIC COVER WITH LOCK.

ROOF TOP UNITS SHALL BE CONTROLLED BY PROGRAMMABLE THERMOSTAT WITH "OFF-FAN ON-HEAT-AUTO-COOL". SET THERMOSTAT TO THE FOLLOWING ADJUSTABLE SETTINGS:

UNOCCUPIED COOLING: 85°F
UNOCCUPIED HEATING: 60°F

OCCUPIED COOLING: 75°F
OCCUPIED HEATING: 70°F.

CEILING EXHAUST FANS (CE1 THRU CE4) :

ELECTRICAL CONTRACTOR TO INSTALL AND PROVIDE MANUAL SWITCH OR OCCUPANCY SENSOR. EXHAUST FANS TO RUN CONTINUOUSLY WHEN AREA IS OCCUPIED. EXHAUST FANS ARE TO BE OFF WHEN AREA IS UNOCCUPIED.

CEILING EXHAUST FAN (CE5):

ELECTRICAL CONTRACTOR TO INSTALL AND PROVIDE THERMOSTAT. EXHAUST FANS TO RUN CONTINUOUSLY WHEN THERMOSTAT IS ABOVE 80°F.

UNIT HEATERS (UH1):

THERMOSTAT MOUNTED ON UNIT. THERMOSTAT FURNISHED WITH MECHANICAL UNIT. UNIT HEATER SHALL RUN WHEN SPACE TEMPERATURE FALLS BELOW 60°F (ADJUSTABLE).

FIRE DAMPER

FIRE DAMPER: 1.5 HOUR RATING, CURTAIN TYPE, DYNAMIC FIRE DAMPER. CONSTRUCTED WITH BLADES IN AIR STREAM. FURNISH WITH UL LISTED SLEEVE. FURNISH WITH DUCT ACCESS PANEL. FRAME: GALVANIZED. CURTAIN: GALVANIZED. 165°F FUSIBLE LINK. MFG: RUSKIN OR EQUIVALENT.

SYMBOL	RUSKIN #	SIZE			REMARKS
		LENGTH (IN)	WIDTH (IN)	DIAM. (IN)	
FD1, FD4, FD5, FD8	DIBD2-D			8	VERTICAL IN WALL INSTALLATION. FURNISH WITH DUCT ACCESS PANEL.
FD2,FD3,FD6,FD7	DIBD2-D			6	VERTICAL IN WALL INSTALLATION. FURNISH WITH DUCT ACCESS PANEL.
FD9,FD10	DIB2-D			10	VERTICAL IN WALL INSTALLATION. FURNISH WITH DUCT ACCESS PANEL.

ROOF TOP UNIT SCHEDULE

ROOF TOP UNIT: COMPLETE PACKAGE 14 SEER EFFICIENCY WEATHERPROOF HEAT PUMP UNIT WITH ELECTRIC HEAT FOR ROOF MOUNTED INSTALLATION. COOLING SECTIONS SHALL INCLUDE R-410 REFRIGERATION SYSTEM WITH ALL STARTERS, CONTROL RELAYS, TRANSFORMERS, AND SHALL BE DESIGNED TO OPERATE AT 95°F AMBIENT SUMMER AND 16°F WINTER CONDITIONS. FURNISH UNIT WITH LOUVERED HAIL GUARD, STANDARD ACCESS PANELS, BELT DRIVE MOTOR , AND ELECTRIC HEAT. COMPARTMENTS SHALL HAVE 0.5" MIN ACOUSTIC INSULATION. FILTERS SHALL BE 2" THICK MERV 8. FURNISH COMPLETE PACKAGE ECONOMIZER AND BAROMETRIC RELIEF. FURNISH 5-YEAR COMPRESSOR WARRANTY FOR ALL UNITS. FURNISH PROGRAMMABLE THERMOSTAT WITH "OFF-HEAT-AUTO-COOL" . FURNISH THERMOSTAT WITH LOCKABLE COVER OR PROGRAMMABLE LOCK FUNCHTION. PERFORMANCE CAPACITIES AS LISTED BELOW. MANUFACTURED BY YORK OR EQUIVALENT.

SYMBOL	YORK MODEL NO.	NOMINAL TONS	MIN. OSA (CFM)	SUPPLY FAN DATA		ELECTRICAL DATA			~OPERATIONAL WEIGHT (LBS)	FILTRATION	
				CFM	ESP IN WC	V/PH/HZ	MCA	MOCP		PREFILTER	FINAL FILTER
RTU1	XN036E07B1C1AAA2A1	3	160	800	0.9	230,1,60	67.9	70	700	NA	2"
RTU2	XN036E15D1C1AAA2A1	3	240	1200	0.9	230,1,60	111.7	125	700	NA	2"
RTU3	XN060E20A1C1AAA2A1	5	380	1950	0.5	230,1,60	151.4	175	700	NA	2"

SYMBOL	COOLING PERFORMANCE		HEATING PERFORMANCE		REMARKS
	TOTAL MBH	TOTAL SENSIBLE MBH	HEAT PUMP@17°F(MBH)	ELECTRIC HEAT (KW)	
RTU1	34.2	16.2	19	7.5	DOWN FLOW, 14" ROOF CURB, BELT DRIVE
RTU2	35.7	20.3	19	15	DOWN FLOW, 14" ROOF CURB, BELT DRIVE
RTU3	52.3	31	30	20	DOWN FLOW, 14" ROOF CURB,BELT DRIVE

KITCHEN EXHAUST HOOD-FURNISHED AND INSTALLED BY OTHERS

EXHAUST HOOD: PER ARCHITECTURAL SPECIFICATIONS. MANUFACTURED GE PROFILE SERIES 36" ISLAND HOOD.

SYMBOL	GE PROFILE #	CFM	ELECTRICAL DATA				REMARKS
			VOLT	PHASE	HERTZ	BREAKER AMP	
KH1	SEE ARCHITECTURAL SPECS	450	120	1	60	20	MECHANICAL CONTRACTOR TO PROVIDE AND INSTALL 8"Ø KITCHEN EXHAUST DUCT WITH TWO LAYERS OF 1.5" 3M FIRE BARRIER DUCT WRAP INSULATION

CEILING EXHAUST FAN SCHEDULE

CEILING EXHAUST FANS: CEILING MOUNTED, GALVANIZED STEEL SCROLL AND HOUSING, SOUND ABSORBING INSULATION, PLUG TYPE DISCONNECT, ALUMINUM GRILLE WITH WHITE FINISH, BACKDRAFT DAMPER, FURNISH WITH SPEED CONTROLLER, ELECTRICAL JUNCTION BOX, MOUNTING BRACKETS. DIRECT DRIVE MOTOR WITH THERMAL OVERLOAD . ROUND DUCT CONNECTOR. CAPACITIES AS LISTED BELOW. SIZED FOR 5600 FEET ELEVATION. MANUFACTURED BY GREENHECK OR EQUIVALENT.

SYMBOL	GREENHECK MODEL #	CFM	ESP IN W.C.	ELECTRICAL DATA					SONES	WEIGHT (LBS)	REMARKS
				VOLT	PHASE	HERTZ	FRPM	WATTS			
CE1 THRU CE5	SP-B150	150	0.5	115	1	60	1050	128	3.5	11	ALUMINUM WHEEL

GRILLE DIFFUSER SCHEDULE

SYMBOL	
A	CEILING SUPPLY DIFFUSER: 24x24 STAMPED FACE, STEEL CONSTRUCTION, ROUND NECK SIZED PER PLANS, MOUNT FOR LAY IN CEILING, ROUND NECK WITH FIXED LOUVERS, REMOVABLE CORE, BAKED WHITE ENAMEL FINISH. KRUEGER 1400 SERIES OR EQUIVALENT.
B	ROUND SUPPLY DIFFUSER: STEEL ROUND, 4 CONES, HORIZONTAL AND VERTICAL AIR DISTRIBUTION, 360° DISCHARGE PATTERN, 3 POSITION SETTINGS, WHITE FINISH, NECK SIZE AS INDICATED ON DRAWINGS. KRUEGER RM2 OR EQUIVALENT.
C	CEILING SUPPLY DIFFUSER: 12x12 STAMPED FACE, STEEL CONSTRUCTION, ROUND NECK SIZED PER PLANS, SURFACE MOUNT FOR HARD CEILING, ROUND NECK WITH FIXED LOUVERS, REMOVABLE CORE, BAKED WHITE ENAMEL FINISH. FURNISH WITH OPPOSED BLADE DAMPER. KRUEGER 1400 SERIES OR EQUIVALENT.
D	CEILING SUPPLY DIFFUSER: 24x24 STAMPED FACE, STEEL CONSTRUCTION, ROUND NECK SIZED PER PLANS, SURFACE MOUNT FOR HARD CEILING, ROUND NECK WITH FIXED LOUVERS, REMOVABLE CORE, BAKED WHITE ENAMEL FINISH. FURNISH WITH OPPOSED BLADE DAMPER. KRUEGER 1400 SERIES OR EQUIVALENT.
E	CEILING RETURN GRILLE: 24x12 ALUMINUM GRILLE, 22"X10" NECK SIZE, ALUMINUM CORE OF 1/2" X 1/2" X 1/2" SQUARES IN ALUMINUM OR STEEL FRAME FOR USE IN LAY IN MOUNT CEILING. BAKED WHITE ENAMEL FINISH. KRUEGER EGC5 SERIES OR EQUIVALENT.
F	CEILING RETURN GRILLE: 24x12 ALUMINUM GRILLE, 22"X10" NECK SIZE, ALUMINUM CORE OF 1/2" X 1/2" X 1/2" SQUARES IN ALUMINUM OR STEEL FRAME FOR USE IN SURFACE MOUNT CEILING. BAKED WHITE ENAMEL FINISH. KRUEGER EGC5 SERIES OR EQUIVALENT.
G	CEILING RETURN GRILLE: 24x24 ALUMINUM GRILLE, 22"X22" NECK SIZE, ALUMINUM CORE OF 1/2" X 1/2" X 1/2" SQUARES IN ALUMINUM OR STEEL FRAME FOR USE IN LAY IN MOUNT CEILING. BAKED WHITE ENAMEL FINISH. KRUEGER EGC5 SERIES OR EQUIVALENT.

UNIT HEATER SCHEDULE

UNIT HEATER: HORIZONTAL AIR DELIVERY ELECTRIC UNIT HEATER, STEEL CASING OF THE CAPACITY AND VOLTAGE LISTED BELOW. UNITS SHALL BE UL AND NEC LISTED FOR SAFE OPERATION CONSTRUCTION AND PERFORMANCE, CONTROL COMPARTMENT SHALL SAFELY ENCLOSE POWER AND TERMINAL BLOCKS, INCLUDE SAFETY FAN GUARD OF HEAVY GAUGE STEEL, MOTOR AND FAN SHALL BE TOTALLY ENCLOSED WITH AUTOMATIC RESETTING AND THERMAL OVERLOAD PROTECTION, FURNISH UNIT WITH MOUNTED UNIT THERMOSTAT. FURNISH WITH LOW VOLTAGE CONTROL TRANSFORMER AND CONTACTOR. MANUFACTURED BYQMARK OR EQUIVALENT.

SYMBOL	QMARK.	WEIGHT (LBS)	SUPPLY FAN DATA	ELECTRICAL DATA					HEATING PERFORMANCE			REMARKS
			CFM	VOLT	PHASE	HERTZ	AMPS	HP	KW	EAT °F	LAT°F	
UH1	MUH0321	27	350	240	1	60	12.5	1/100	3	55	82	FURNISH T-STAT THAT MOUNTS ON UN IT. FURNISH WITH WALL MOUNTING BRACKET

MOLZENCORBIN
2701 Miles Road SE
Albuquerque, New Mexico 87106
505 242 5700 office
505 242 0673 fax
MolzenCorbin.com

NUMERIC SCALE CONFIRMATION
DRAWINGS ARE DEPICTED AT INTENDED NUMERIC SCALES
IF THIS BAR EQUALS ONE INCH

PAUL M. ROMERO NEW MEXICO 14932 REGISTERED PROFESSIONAL ENGINEER
06-12-19

REV NO.	REV DATE	DESCRIPTION

PROJECT NUMBER: SFC182-11
DESIGNED BY: PMR
DRAWN BY: PMR
CHECKED BY: PMR
PRIME DESIGN PROFESSIONAL: JOHN Q. PATE
PROJECT DATE: MAY 2019

MECHANICAL EQUIPMENT SCHEDULES

LA PUEBLA FIRE STATION ADDITION
SANTA FE COUNTY
LA PUEBLA, NEW MEXICO

M-601
SHEET

© COPYRIGHT

PLOT DATE: 6/11/2019 2:08 PM
SAVE DATE: 6/11/2019 2:07 PM
C:\USERS\PROMERO\DOCUMENTS\PORTFOLIO\LA PUEBLA FIRE STATION\DWGS\MLP-601

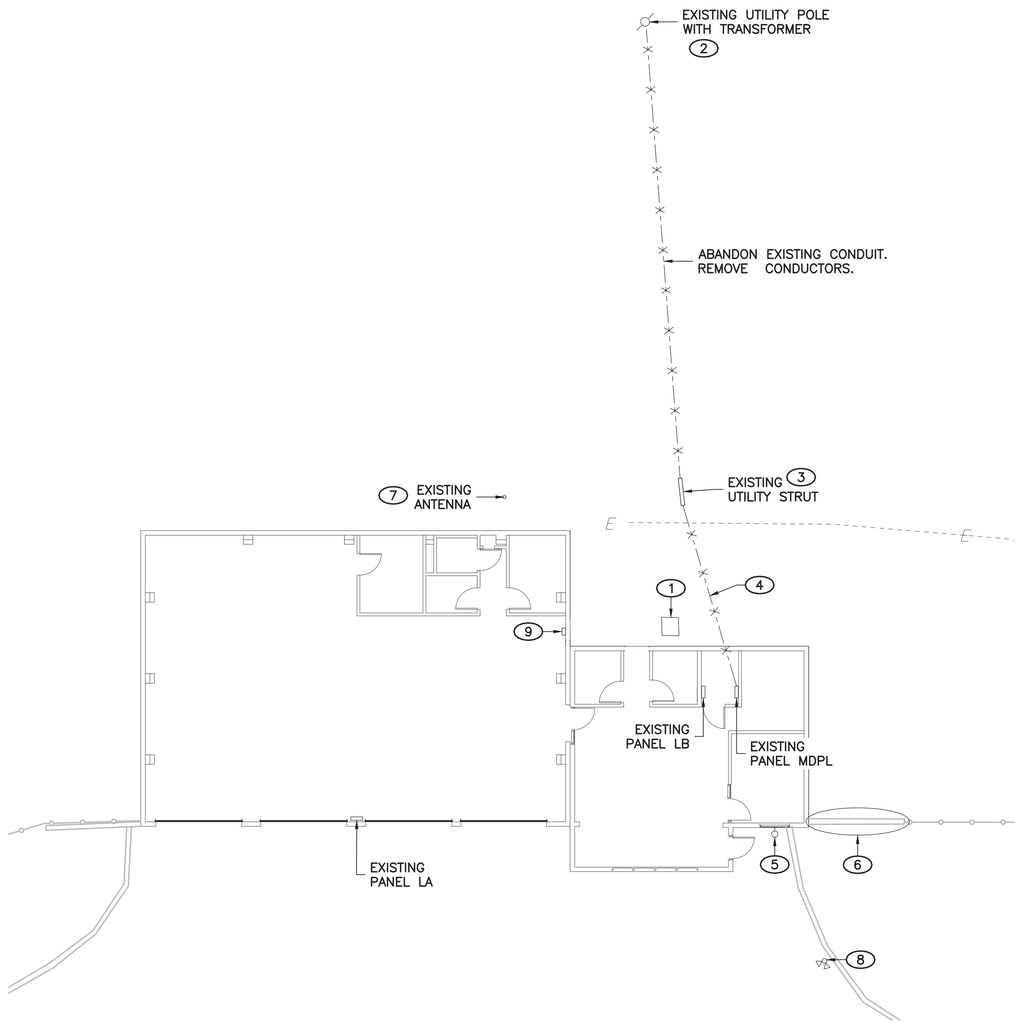

ELECTRICAL SITE PLAN

SCALE: 1"=10'-0"

0 2' 5' 10' 20'
1"=10'-0"

N

GENERAL NOTES

1. EXISTING EQUIPMENT AND ELECTRICAL POWER LINES ARE IDENTIFIED BY LIGHTER PEN WEIGHT ON THE DRAWING.

KEYED NOTES (#)

1. EXISTING HVAC CONDENSER TO BE RELOCATED ON EXISTING ROOF. EXISTING SWITCH AND RECEPTACLE ON THE WALL TO BE RELOCATED NEXT TO THE HVAC CONDENSER ON THE EXISTING ROOF. EXISTING CONNECTING CONDUITS AND CONDUCTORS TO BE REMOVED. SEAL ALL WALL PENETRATIONS WEATHER TIGHT. REFER TO E-104 FOR NEW LOCATION OF CONDENSER AND ELECTRICAL EQUIPMENT.
2. EXISTING 120/240V, 1PH, 3W TRANSFORMER TO BE UPGRADED. REFER TO E-102 FOR NEW TRANSFORMER LOCATION.
3. EXISTING UTILITY STRUT WITH METER ENCLOSURE AND DISCONNECT. METER TO BE UPGRADED. DISCONNECT TO BE REMOVED AND DELIVERED TO THE OWNER. REFER TO E-102 FOR MODIFIED POWER ROUTING.
4. PULL EXISTING CONDUCTORS BACK TO SOURCE. REMOVE EXISTING CONDUIT. PATCH AND REPAIR AREA OF ELECTRICAL DEMOLITION. MATCH SURROUNDING FINISH.
5. REMOVE EXISTING LIGHT FIXTURE AND DELIVER TO THE OWNER. PULL CONDUCTORS BACK TO SOURCE.
6. REMOVE TV DISH ANTENNA AND CAMERAS LOCATED ON WING WALL AND DELIVER TO THE OWNER. PULL WIRING BACK TO SOURCE.
7. ANTENNA POLE TO REMAIN IN PLACE; EXTEND POLE AS NEEDED. PROTECT FROM DAMAGES DURING CONSTRUCTION.
8. FLAG POLE AND LIGHTING FIXTURE TO REMAIN IN PLACE. PROTECT FROM DAMAGES DURING CONSTRUCTION.
9. EXISTING RADIO TO BE RELOCATED SOUTH ON THIS WALL. REFER TO E-102 FOR NEW LOCATION.

MOLZENCORBIN

2701 Miles Road SE
Albuquerque, New Mexico 87106
505 242 5700 office
505 242 0673 fax
MolzenCorbin.com

NUMERIC SCALE CONFIRMATION

DRAWINGS ARE DEPICTED AT INTENDED NUMERIC SCALES
IF THIS BAR EQUALS ONE INCH

DANIEL GONZALES
NEW MEXICO
19969
PROFESSIONAL ENGINEER
6-12-19

REV NO	REV DATE	DESCRIPTION

PROJECT NUMBER: SFC182-11
DESIGNED BY: NW
DRAWN BY: NW
CHECKED BY: DG
PRIME DESIGN PROFESSIONAL: JOHN Q. PATE
PROJECT DATE: JUNE 2019

ELECTRICAL
DEMOLITION SITE PLAN

LA PUEBLA FIRE STATION ADDITION
SANTA FE COUNTY
LA PUEBLA, NEW MEXICO

E-101

SHEET

© COPYRIGHT

PLOT DATE: 6/13/2019 4:49 PM
SAVE DATE: 6/13/2019 2:55 PM
I:\SANTA FE COUNTY\SFC182-11 LA PUEBLA FIRE\DWGS\ELEP-101

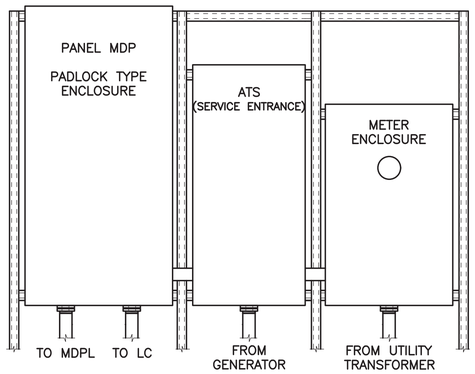

POWER DISTRIBUTION MOUNTING DETAILS

SCALE: NONE

GENERAL NOTES

1. EXISTING EQUIPMENT AND ELECTRICAL POWER LINES ARE IDENTIFIED BY LIGHTER PEN WEIGHT ON THE DRAWING.
2. ALL ELECTRICAL WORK SHALL BE PERFORMED IN A NEAT AND WORKMAN LIKE MANNER IN FULL ACCORDANCE WITH NATIONAL ELECTRICAL CODE (NEC), NATIONAL ELECTRIC SAFETY CODE (NESC), AND LOCAL AND STATE SAFETY CODES.
3. ALL WIRING SHALL BE COPPER, THHN/THWN INSULATION.
4. REFER TO E–601 FOR CONDUIT AND CONDUCTORS SCHEDULE.
5. POWER DISTRIBUTION EQUIPMENT TO BE PADLOCK TYPE.

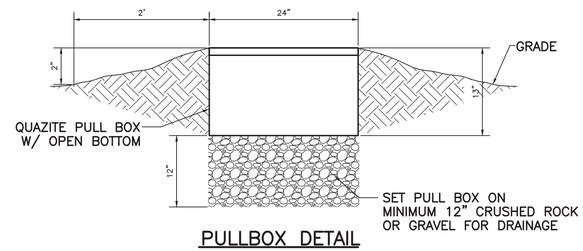

PULLBOX DETAIL

N.T.S.

KEYED NOTES (#)

1. STRUT WITH UTILITY METER, ATS FOR FUTURE GENERATOR CONNECTION, AND MAIN DISTRIBUTION PANEL MDP. SHOWN HERE FOR DRAFTING PURPOSES. COORDINATE WITH JEMEZ MOUNTAINS ELECTRIC COOPERATIVE (JMEC) FOR EXACT STRUT LOCATION AND UTILITY METER UPGRADE. SEE MOUNTING DETAILS THIS SHEET. INSTALL BOLLARDS ON FRONT OF EQUIPMENT; REFER TO C–501 FOR PIPE BOLLARD DETAIL.
2. INSTALL CONDUIT WITH POWER FROM MDP ABOVE FALSE CEILING. REFER TO E–601 FOR MODIFIED ONE–LINE DIAGRAM AND POWER CONDUIT SCHEDULE.
3. UPGRADE UTILITY TRANSFORMER PER SCHEDULE ON E–601. MOUNT ON CONCRETE PAD. COORDINATE WITH JMEC FOR APPROVED MATERIALS.
4. REFER TO E–602 FOR LIGHTING FIXTURE SCHEDULE AND POLE MOUNTING DETAILS. INSTALL RECEPTACLE WITH WP WHILE–IN–USE COVER ON THE POLE. POWER LIGHT AND RECEPTACLE FROM PANEL LD. REFER TO E–601 FOR PANEL SCHEDULE.
5. INSTALL (3) CONDUITS WITH POWER CONDUCTORS: (1) TO EXISTING PANEL MDPL, (1) TO PANEL LC, (1) TO PANEL LD – AS SHOWN ON E–601. REFER TO POWER CONDUIT SCHEDULE FOR CONDUIT AND CONDUCTORS SIZE. INSTALL 1" SPARE CONDUIT WITH PULL CORD BETWEEN PULL BOX AND PANEL MDP FOR FUTURE GENERATOR CONNECTION.
6. PROVIDE AND INSTALL NEW COMMUNICATION CABLE AND POWER WIRING AS REQUIRED.
7. INSTALL 4 #12, (2) #12G IN 3/4" CONDUIT FOR LIGHTING AND RECEPTACLES.

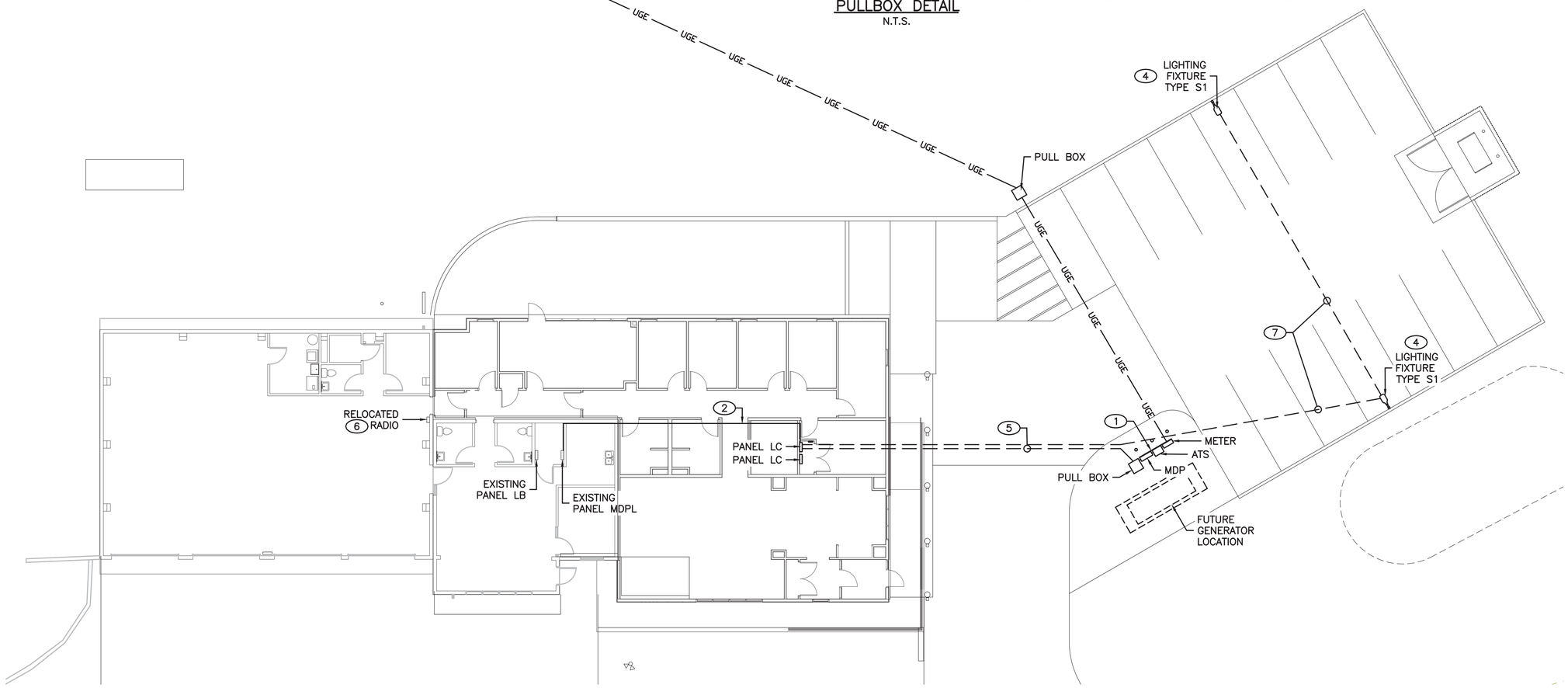

MODIFIED SITE PLAN

SCALE: 1"=10'–0"

0 2' 5' 10' 20'
1"=10'–0"

N

MOLZENCORBIN
2701 Miles Road SE
Albuquerque, New Mexico 87106
505 242 5700 office
505 242 0673 fax
MolzenCorbin.com

NUMERIC SCALE CONFIRMATION
DRAWINGS ARE DEPICTED AT INTENDED NUMERIC SCALES
IF THIS BAR EQUALS ONE INCH

DANIEL GONZALES NEW MEXICO 19969 PROFESSIONAL ENGINEER
6-12-19

REV NO	REV DATE	DESCRIPTION

PROJECT NUMBER: SFC182–11
DESIGNED BY: NW
DRAWN BY: NW
CHECKED BY: DG
PRIME DESIGN PROFESSIONAL: JOHN Q. PATE
PROJECT DATE: JUNE 2019

ELECTRICAL
SITE PLAN MODIFICATION

LA PUEBLA FIRE STATION ADDITION
SANTA FE COUNTY
LA PUEBLA, NEW MEXICO

E-102
SHEET

© COPYRIGHT

PLOT DATE: 6/13/2019 4:49 PM
SAVE DATE: 6/13/2019 3:08 PM
I:\SANTA FE COUNTY\SFC182-11 LA PUEBLA FIRE\DWGS\ELP-102

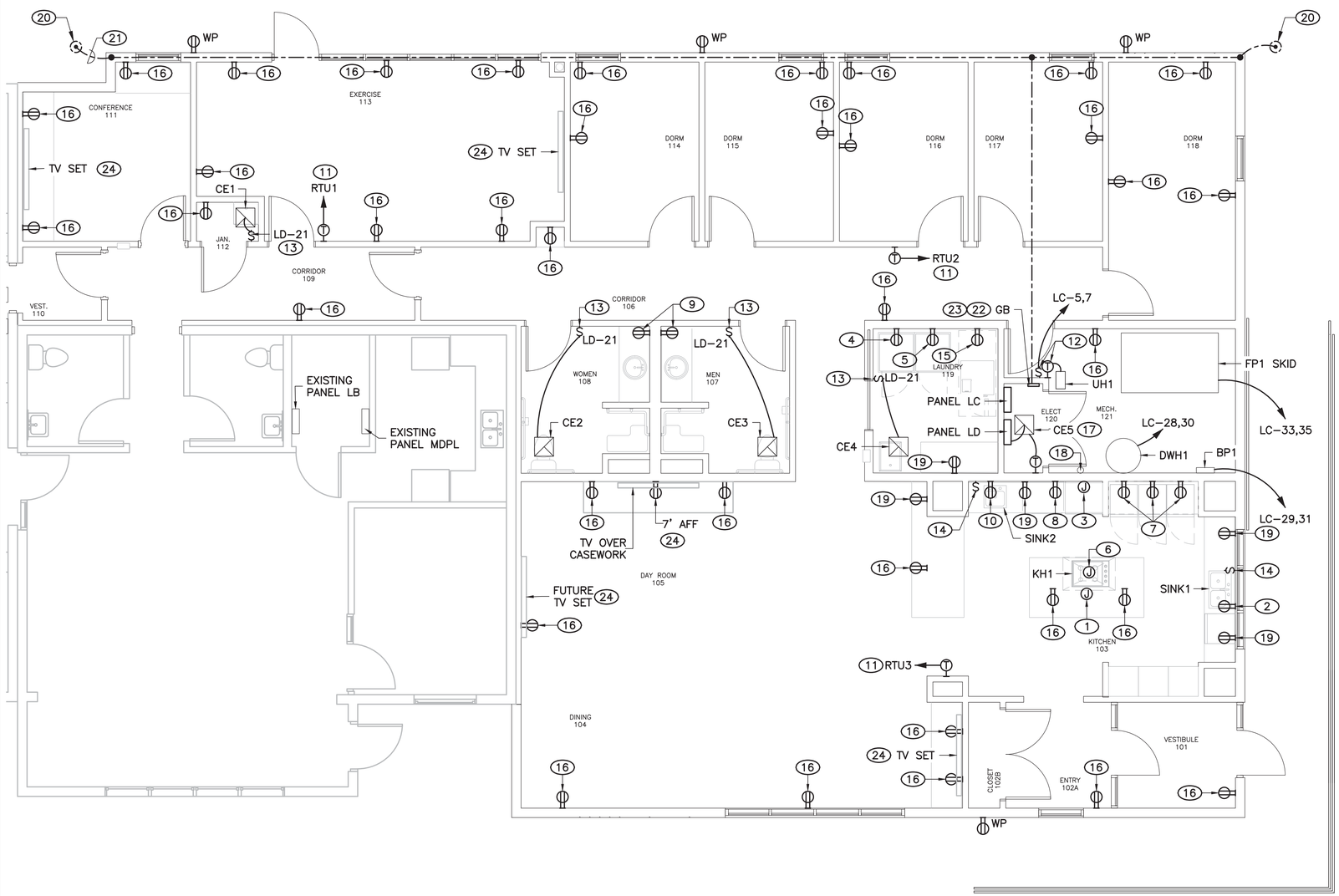

BUILDING ADDITION POWER PLAN

SCALE: 1/4"=1'-0"

0 1' 2' 4' 8'
1/4"=1'-0"

GENERAL NOTES

1. EXISTING EQUIPMENT AND ELECTRICAL POWER LINES ARE IDENTIFIED BY LIGHTER PEN WEIGHT ON THE DRAWING.
2. ALL ELECTRICAL WORK SHALL BE PERFORMED IN A NEAT AND WORKMAN LIKE MANNER IN FULL ACCORDANCE WITH NATIONAL ELECTRICAL CODE (NEC), NATIONAL ELECTRIC SAFETY CODE (NESC), AND LOCAL AND STATE SAFETY CODES.
3. ALL RECEPTACLES IN KITCHEN, BATHROOMS, JANITORS CLOSET, LAUNDRY ROOM, AND OTHER AREAS AS REQUIRED BY NEC TO BE GFCI
4. ALL WIRING SHALL BE COPPER, THHN/THWN INSULATION. MINIMUM CONDUCTOR SIZE SHALL BE #12.

KEYED NOTES (#)

1. INSTALL JUNCTION BOX ON THE BACK OF THE COOKTOP ENCLOSURE SO THAT IT CAN BE REACHED THOUGHT THE FRONT OF THE CABINET. CONNECT COOKTOP PER MANUFACTURER RECOMMENDATIONS.
2. INSTALL (2) GFCI DUPLEX TYPE RECEPTACLES IN THE SINK-1 CABINET REAR WALL FOR DISHWASHER AND GARBAGE DISPOSAL POWER CORD CONNECTIONS. REFER TO E-601 FOR POWER PANEL SCHEDULE.
3. INSTALL JUNCTION BOX ON THE BACK OF THE SINGLE OVEN ENCLOSURE. CONNECT OVEN PER MANUFACTURER RECOMMENDATIONS.
4. INSTALL GFCI TYPE RECEPTACLE IN THE WALL BEHIND THE WASHER SO THE POWER CORD IS ACCESSIBLE WHEN THE WASHER IS IN AN INSTALLED POSITION. REFER TO E-601 FOR POWER PANEL SCHEDULE.
5. INSTALL PROPERLY GROUNDED WALL OUTLET WITHIN 36" OF DRYER SERVICE CORD ENTRY SO THAT IT WOULD BE ACCESSIBLE WHEN DRYER IS MOUNTED IN POSITION. REFER TO E-601 FOR POWER PANEL SCHEDULE.
6. ROUTE WIRING IN THE CEILING. ALLOW ADDITIONAL LENGTH FROM CEILING JOISTS TO REACH THE JUNCTION BOX ON THE BOTTOM OF THE HOOD SUPPORT FRAME. JB SUPPLIED WITH HOOD. CONNECT AS RECOMMENDED BY MANUFACTURER.
7. INSTALL RECEPTACLE ON THE WALL BEHIND OF REFRIGERATOR; CONNECT TO GFCI CIRCUIT BREAKER IN POWER DISTRIBUTION PANEL. TYPICAL FOR ALL REFRIGERATORS. REFER TO E-601 FOR POWER PANEL SCHEDULE.
8. INSTALL GFCI RECEPTACLE ON THE WALL AT MICROWAVE LOCATION. REFER TO E-601 FOR POWER PANEL SCHEDULE.
9. INSTALL GFCI RECEPTACLE ADJACENT TO SINK AND APPROXIMATELY 6" ABOVE TOP OF SINK. REFER TO E-601 FOR POWER PANEL SCHEDULE. SEE ARCHITECTURAL INTERIOR ELEVATIONS.
10. INSTALL A GFCI DUPLEX TYPE RECEPTACLE IN THE SINK-2 CABINET REAR WALL FOR GARBAGE DISPOSAL POWER CORD CONNECTION. REFER TO E-601 FOR POWER PANEL SCHEDULE.
11. REFER TO E-104 FOR ROOF TOP UNIT (RTU) LOCATION.
12. INSTALL DISCONNECT FOR UNIT HEATER. NAMEPLATE REQUIRED: UNIT HEATER MAINTENANCE DISCONNECT. THERMOSTAT PROVIDED WITH UNIT. SHOWN HERE FOR DRAFTING PURPOSES.
13. ON-OFF SWITCH FOR CEILING EXHAUST FAN AND LIGHTING. REFER TO E-602 FOR WIRING DIAGRAM.
14. INSTALL ON-OFF SWITCH FOR GARBAGE DISPOSAL APPROXIMATELY 6" ABOVE TOP OF SINK. SEE ARCHITECTURAL INTERIOR ELEVATIONS.
15. INSTALL GFCI TYPE RECEPTACLE ON THE WALL CLOSE TO THE EXTRACTOR LOCATION SO THE POWER CORD IS ACCESSIBLE WHEN THE EXTRACTOR IS IN AN INSTALLED POSITION. REFER TO E-601 FOR POWER PANEL SCHEDULE.
16. INSTALL GFCI 12" ABOVE THE FLOOR. REFER TO E-601 FOR POWER PANEL SCHEDULE.
17. REFER TO E-601 FOR PANEL SCHEDULE TO POWER CE5. REFER TO M-601 FOR SEQUENCE OF OPERATIONS.
18. HOT WATER CIRCULATOR HWC1. POWER FROM PANEL LC. REFER TO E-601 FOR POWER PANEL SCHEDULE.
19. INSTALL GFCI RECEPTACLE 6" ABOVE THE COUNTERTOP.
20. INSTALL GROUND RODS IN INSPECTION WELLS. TYPICAL.
21. INSTALL #2/0 BC IN FOOTING. BOND TO STRUCTURAL STEEL IN FOOTING IN MINIMUM TWO LOCATIONS.
22. BOND TO BC IN FOOTING.
23. BOND TO MDP, ATS, AND LC WITH #2/0 BC AND PANEL MDPL AND LD WITH #1/0 BC. BOND TO WATER PIPING, GAS LINES, AND OTHER AS REQUIRED BY NEC WITH #6 BC.
24. REFER TO E-106 FOR TV POWER AND DATA CONNECTION REQUIREMENTS.

MOLZENCORBIN
2701 Miles Road SE
Albuquerque, New Mexico 87106
505 242 5700 office
505 242 0673 fax
MolzenCorbin.com

NUMERIC SCALE CONFIRMATION
DRAWINGS ARE DEPICTED AT INTENDED NUMERIC SCALES
IF THIS BAR EQUALS ONE INCH

DANIEL GONZALES NEW MEXICO 19969 PROFESSIONAL ENGINEER
6-12-19

REV NO	REV DATE	DESCRIPTION

PROJECT NUMBER: SFC182-11
DESIGNED BY: NW
DRAWN BY: NW
CHECKED BY: DG
PRIME DESIGN PROFESSIONAL: JOHN Q. PATE
PROJECT DATE: JUNE 2019

ELECTRICAL
BUILDING ADDITION POWER PLAN

LA PUEBLA FIRE STATION ADDITION
SANTA FE COUNTY
LA PUEBLA, NEW MEXICO

E-103
SHEET

© COPYRIGHT

PLOT DATE: 6/13/2019 4:49 PM
SAVE DATE: 6/13/2019 3:49 PM
I:\SANTA FE COUNTY\SFC182-11 LA PUEBLA FIRE\DWGS\ELP-103

GENERAL NOTES

1. REFER TO E–601 FOR POWER PANEL SCHEDULE.
2. ALL RECEPTACLES AS REQUIRED BY NEC TO BE GFCI.
3. REFER TO M–601 FOR RTU SEQUENCE OF OPERATIONS.

KEYED NOTES (#)

1. RELOCATED EXISTING SWITCH AND RECEPTACLE FOR CONDENSER. MOUNT ADJACENT TO CONDENSER. RECONNECT TO EXISTING FURNACE WITH 4–#14 IN 1/2" CONDUIT.
2. ROOFTOP RECEPTACLE SHOWN HERE FOR DRAFTING PURPOSES. GFCI TYPE WITH WEATHER PROOF COVER.

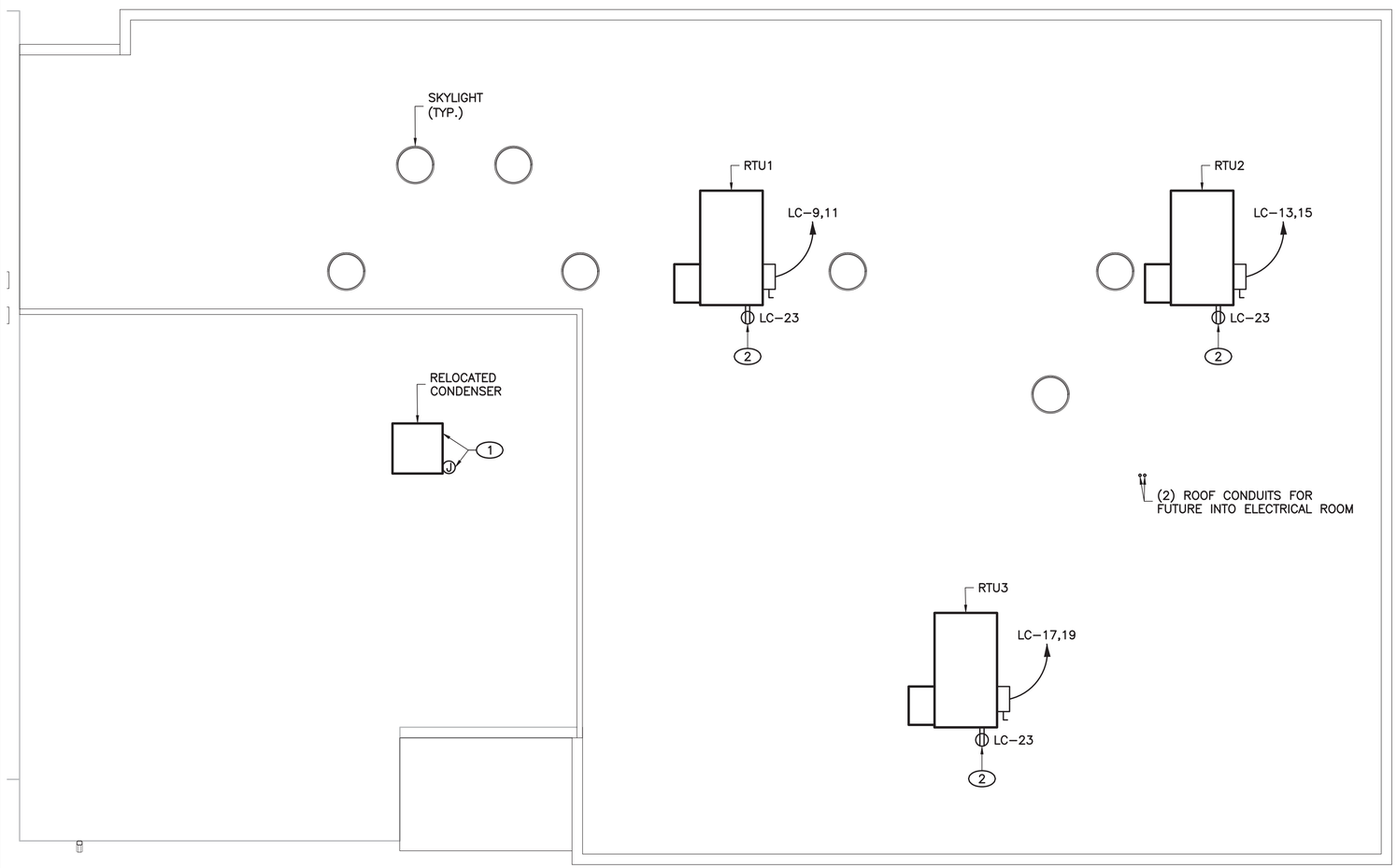

BUILDING ROOF POWER PLAN
SCALE: 1/4"=1'–0"

0 1' 2' 4' 8'
1/4"=1'–0"

MOLZENCORBIN
2701 Miles Road SE
Albuquerque, New Mexico 87106
505 242 5700 office
505 242 0673 fax
MolzenCorbin.com

NUMERIC SCALE CONFIRMATION
DRAWINGS ARE DEPICTED AT INTENDED NUMERIC SCALES
IF THIS BAR EQUALS ONE INCH

DANIEL GONZALES NEW MEXICO 19969 PROFESSIONAL ENGINEER
6-12-19

REV NO	REV DATE	DESCRIPTION

PROJECT NUMBER: SFC182–11
DESIGNED BY: NW
DRAWN BY: NW
CHECKED BY: DG
PRIME DESIGN PROFESSIONAL: JOHN Q. PATE
PROJECT DATE: JUNE 2019

ELECTRICAL
BUILDING ROOF POWER PLAN

LA PUEBLA FIRE STATION ADDITION
SANTA FE COUNTY
LA PUEBLA, NEW MEXICO

E-104
SHEET

PLOT DATE: 6/13/2019 4:49 PM
SAVE DATE: 6/13/2019 3:51 PM
I:\SANTA FE COUNTY\SFC182-11 LA PUEBLA FIRE\DWGS\ELEP-104

© COPYRIGHT

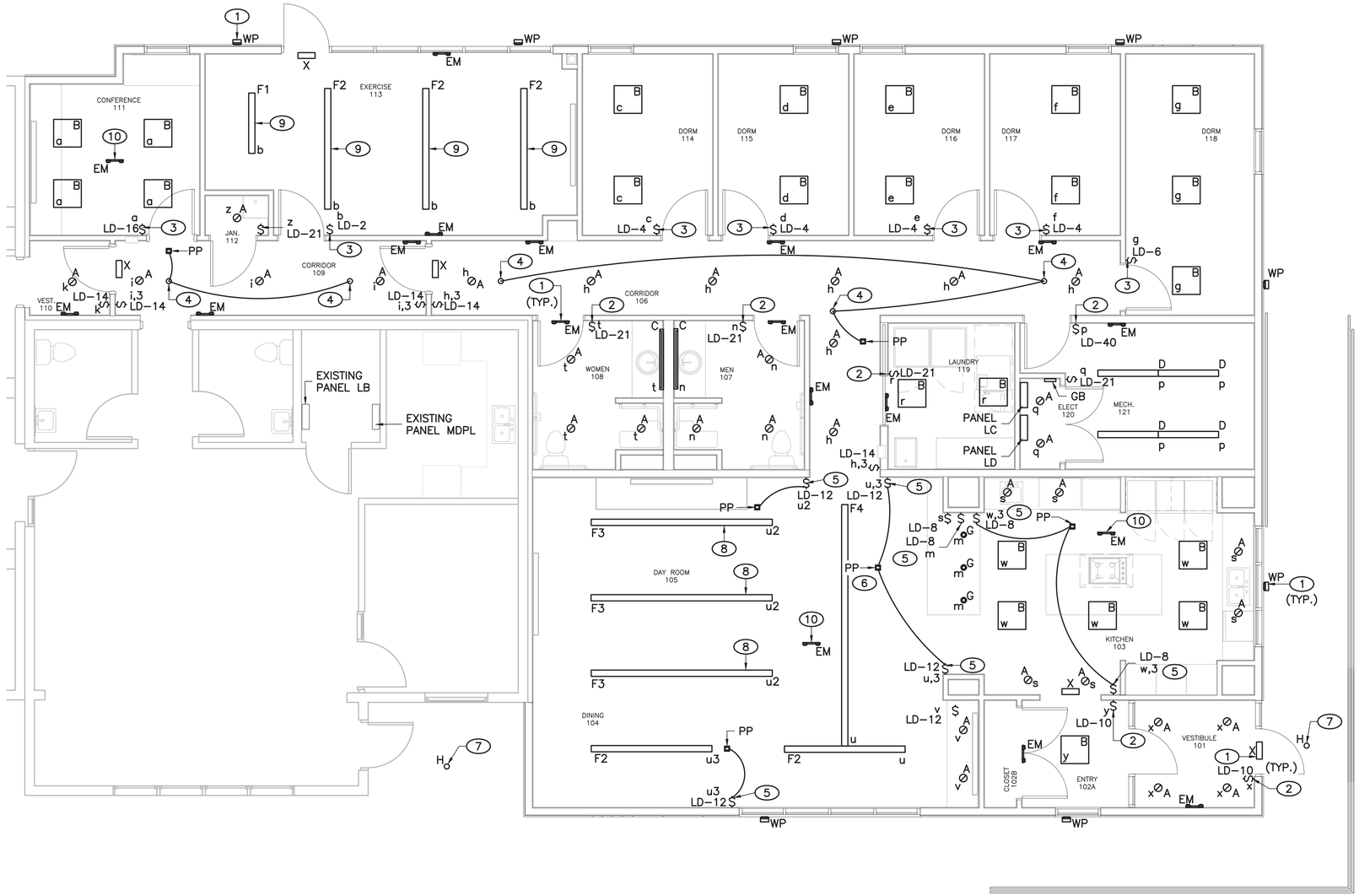

BUILDING ADDITION LIGHTING PLAN

SCALE: 1/4"=1'-0"

0 1' 2' 4' 8'
1/4"=1'-0"

GENERAL NOTES

1. EXISTING EQUIPMENT AND ELECTRICAL POWER LINES ARE IDENTIFIED BY LIGHTER PEN WEIGHT OF THE DRAWING.
2. ALL ELECTRICAL WORK SHALL BE PERFORMED IN A NEAT AND WORKMAN LIKE MANNER IN FULL ACCORDANCE WITH NATIONAL ELECTRICAL CODE (NEC), NATIONAL ELECTRIC SAFETY CODE (NESC), AND LOCAL AND STATE SAFETY CODES.
3. ALL WIRING SHALL BE COPPER, THHN/THWN INSULATION. MINIMUM CONDUCTOR SIZE SHALL BE #12.
4. REFER TO E-602 FOR LIGHTING FIXTURE SCHEDULE.

KEYED NOTES (#)

1. POWER LIGHTING FIXTURE DIRECTLY FROM POWER PANEL LD, CKT 42. TYPICAL FOR LIGHTS TYPE "EM", "WP", AND "X".
2. WALL SWITCH OCCUPANCY SENSOR. REFER TO LIGHTING CONTROL TABLE
3. 1-10V DIMMING WALL SWITCH SENSOR. REFER TO LIGHTING CONTROL TABLE
4. CEILING MOUNT OCCUPANCY SENSOR. REFER TO LIGHTING CONTROL TABLE. REFER TO E-602 FOR WIRING DIAGRAM.
5. DECORATOR SWITCH & DIMMER. REFER TO LIGHTING CONTROL TABLE.
6. POWER PACK/RELAY (PP). REFER TO LIGHTING CONTROL TABLE.
7. POWER LIGHT FIXTURE FROM EXISTING LIGHTING CIRCUIT (PANEL LB CIRCUIT 1) THRU EXISTING PHOTOCELL.
8. MOUNT LIGHTING FIXTURE AT 8'6" ABOVE FLOOR.
9. MOUNT LIGHTING FIXTURE AT 10' ABOVE FLOOR.
10. EM LIGHT FIXTURE IN THIS LOCATION TO BE CEILING MOUNTED.

LIGHTING CONTROL				
KEYED NOTE	DESCRIPTION	MFR	MODEL	Q-TY
2	WALL SWITCH OCCUPANCY SENSOR, 120/277 VAC, PASSIVE DUAL TECHNOLOGY MOTION DETECTION, 1-POLE: AUTO ON DEFAULT OPERATION, WHITE.	SENSORWORX	SWX-121-WH	6
3	0-10V DIMMING WALL SWITCH SENSOR, 120/277 VAC,PASSIVE DUAL TECHNOLOGY MOTION DETECTION, MANUAL ON DEFAULT OPERATION, WHITE.	SENSORWORX	SWX-123-D-WH	7
4	CEILING MOUNT OCCUPANCY SENSOR, PASSIVE INFRARED MOTION DETECTION, LARGE MOTION 360 DEG., 12-24 VAC/VDC, TO BE USED WITH SWX-900-AX.	SENSORWORX	SWX-202-1	5
5	DECORATOR SWITCH & DIMMER, 5-24 VDCOPERATING VOLTAGE, TO BE USED WITH SWX-900-AX.	SENSORWORX	SWX-803-WH	7
6	POWER PACK (PP), 120/277 VAC, AUXILIARY SWITCH INPUT, SINGLE RALAY+150mA SUPPLY.	SENSORWORX	SWX-900-AX	6

MOLZENCORBIN
2701 Miles Road SE
Albuquerque, New Mexico 87106
505 242 5700 office
505 242 0673 fax
MolzenCorbin.com

NUMERIC SCALE CONFIRMATION
DRAWINGS ARE DEPICTED AT INTENDED NUMERIC SCALES
IF THIS BAR EQUALS ONE INCH

DANIEL GONZALES NEW MEXICO 19969 PROFESSIONAL ENGINEER
6-12-19

REV NO	REV DATE	DESCRIPTION

PROJECT NUMBER: SFC182-11
DESIGNED BY: NW
DRAWN BY: NW
CHECKED BY: DG
PRIME DESIGN PROFESSIONAL: JOHN Q. PATE
PROJECT DATE: JUNE 2019

ELECTRICAL
BUILDING ADDITION LIGHTING PLAN

LA PUEBLA FIRE STATION ADDITION
SANTA FE COUNTY
LA PUEBLA, NEW MEXICO

E-105
SHEET

© COPYRIGHT

PLOT DATE: 6/13/2019 4:49 PM
SAVE DATE: 6/13/2019 4:28 PM
L:\SANTA FE COUNTY\SFC182-11 LA PUEBLA FIRE\DWGS\ELP-105

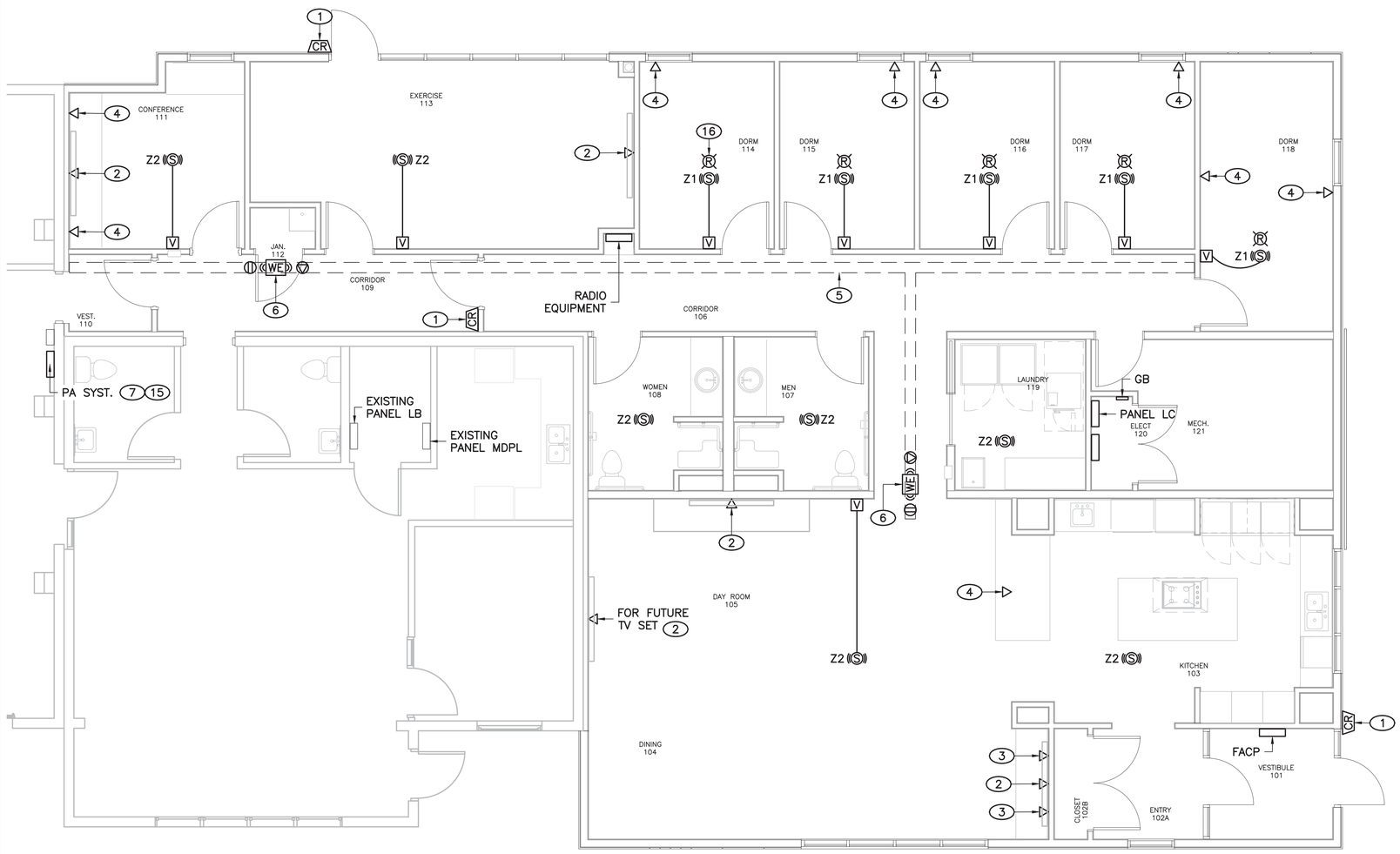

BUILDING ADDITION DATA PLAN

SCALE: 1/4"=1'-0"

0 1' 2' 4' 8'
1/4"=1'-0"

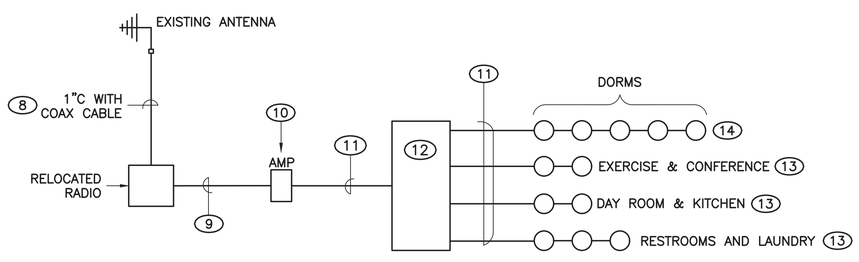

PA SYSTEM CONNECTION DIAGRAM (15)

GENERAL NOTES

1. MOUNT DATA PORTS WHERE SHOWN. RUN TWO CAT–6 CABLES FROM EACH OUTLET TO IT EQUIPMENT USING 3/4" CONDUIT AND CABLE TRAY. LABEL CABLES ON BOTH ENDS. TERMINATIONS TO BE PERFORMED BY IT CONTRACTOR UNDER ALLOWANCE.
2. PROVIDE PA SYSTEM WITH ALL NECESSARY RELAYS, WIRES, AND MOUNTING EQUIPMENT.

KEYED NOTES (#)

1. MOUNT 2–GANG BOX FOR PROXIMITY CARD READER AT 48" AFF. STUB 3/4" CONDUIT IN WALL TO CEILING INTO CABLE TRAY SYSTEM AND INSTALL BUSHING. INSTALL J–BOX ABOVE CEILING. INSTALL 3/4" CONDUIT WITH PULL CORD TO CABLE TRAY SYSTEM TO BE USED FOR ACCESS CONTROL.
2. PROVIDE FLAT PANEL TELEVISION CONNECTION RECESSED ENCLOSURE FOR TV POWER, DATA PORT, AND COAX CABLE CONNECTOR. PEERLESS–AV IBA2AC OR ENGINEER REVIEWED EQUIVALENT. COORDINATE ENCLOSURE LOCATION WITH TV/MONITOR LOCATION IN FIELD. INSTALL COAX CABLE AND PULL IT BACK TO EXISTING COMM CLOSET.
3. MOUNT DATA PORT BELOW COUNTER TOP.
4. MOUNT DATA PORT 12" AFF. INSTALL ADJACENT TO RESPECTIVE RECEPTACLE SHOWN ON POWER PLAN.
5. 8" CABLE TRAY SYSTEM. PROVIDE WITH NECESSARY TRAY FITTINGS. COORDINATE CABLE TRAY INSTALLATION WITH OTHER TRADES.
6. CONTRACTOR TO INSTALL DATA PORT AND WIRELESS ETHERNET ACCESS POINT ABOVE SUSPENDED CEILING AND RUN 2 CAT–6 CABLES TO PA RACK USING 3/4" CONDUIT AND CABLE TRAY.
7. WALL MOUNTED 19" IT RACK FOR PA EQUIPMENT TO BE FURNISHED AND INSTALLED BY PA SYSTEM SUPPLIER.
8. ANDREW LDF4–50A 1/2" HELIAX OR ENGINEER REVIEWED EQUIVALENT. IMPEDANCE MATCHING WITH EXISTING ANTENNA TO BE CONFIRMED IN FIELD.
9. MOTOROLA BREAKOUT CABLE #HLN9457A AND PIN TOOL #6680163F01.
10. BOSE IZA2120–HZ AUDIO AMPLIFIER OR ENGINEER REVIEWED EQUIVALENT.
11. WEST PENN WIRE #25225B 16/2 PLENUM COMMUNICATION CABLE. INSTALL IN 3/4" CONDUIT TO THE CABLE TRAY SYSTEM.
12. 4–CHANNEL SPEAKER SELECTOR WITH VOLUME CONTROL.
13. CEILING MOUNTED SPEAKER BOSE DS16–F WITH ATLAS E408–AT100 100W VOLUME CONTROL OR ENGINEER REVIEWED EQUIVALENT.
14. CEILING MOUNTED SPEAKER BOSE DS16–F WITH ATLAS E408–AT35 35W VOLUME CONTROL OR ENGINEER REVIEWED EQUIVALENT.
15. PROVIDE PAGING SYSTEM WITH ALTRONIX EFLOW–102N POWER SUPPLY AND MIDDLE ATLANTIC 1RU 1000VA UPS BACK UP SYSTEM OR ENGINEER REVIEWED EQUIVALENT.
16. WERMA 80110075 SURFACE MOUNT STROBE BEACON OR ENGINEER REVIEWED EQUIVALENT. TYPICAL FOR ALL.

LEGEND

- Z1 (S) TYPE 2 SPEAKER POWERED FROM ZONE 1 OF PA SYSTEM
- STROBE LIGHT WITH RED LENS
- V SPEAKER VOLUME CONTROL
- △ WALL MOUNTED DUAL OUTLET DATA PORT
- CR CARD READER
- CEILING MOUNTED SINGLE OUTLET DATA PORT
- WE WIRELESS ETHERNET ACCESS PORT

MOLZENCORBIN
2701 Miles Road SE
Albuquerque, New Mexico 87106
505 242 5700 office
505 242 0673 fax
MolzenCorbin.com

NUMERIC SCALE CONFIRMATION
DRAWINGS ARE DEPICTED AT INTENDED NUMERIC SCALES
IF THIS BAR EQUALS ONE INCH

DANIEL E. GONZALES NEW MEXICO 19969 PROFESSIONAL ENGINEER
6-12-19

REV NO	REV DATE	DESCRIPTION

PROJECT NUMBER: SFC182-11
DESIGNED BY: NW
DRAWN BY: NW
CHECKED BY: DG
PRIME DESIGN PROFESSIONAL: JOHN Q. PATE
PROJECT DATE: JUNE 2019

ELECTRICAL
BUILDING ADDITION DATA PLAN

LA PUEBLA FIRE STATION ADDITION
SANTA FE COUNTY
LA PUEBLA, NEW MEXICO

E-106
SHEET

PLOT DATE: 6/13/2019 4:50 PM
SAVE DATE: 6/13/2019 4:33 PM
I:\SANTA FE COUNTY\SFC182-11 LA PUEBLA FIRE\DWGS\ELEP-106

© COPYRIGHT

KN 1	KN 2	POWER PANEL LC					ELECTRICAL ROOM			KN 2	KN 1
MOTR FEEDR	EQUIP FEEDR	CKT. NO.	TRIP/ POLES	LOAD SERVED	PHASE AMPS		AMPS	LOAD SERVED	TRIP/ POLES	CKT. NO.	EQUIP FEEDR	MOTR FEEDR
	40A2	1	40/2	ELECTRIC COOKTOP J-BOX	40	A	4.5	SINGLE OVEN J-BOX	20/2	2	30A2	
		3			40	B	4.5			4		
	30A2	5	20/2	UNIT HEATER UH1 (RM 121)	12.5	A	25	DRYER RCPT (RM 119)	30/2	6	30A2	
		7			12.5	B	25			8		
	70A2	9	70/2	RTU1	67.9	A	9.52	SINK1 DISPOSER RCPT (RM103)	20/1	10	30AS	
		11			67.9	B	9.52	SINK2 DISPOSER RCPT (RM 103)	20/1	12	30AS	
	125A2	13	125/2	RTU2	111.7	A	11.6	REFRIGERATOR 1 RCPT (6)	20/1	14	30AS	
		15			111.7	B	11.6	REFRIGERATOR 2 RCPT (6)	20/1	16	30AS	
	175A2	17	175/2	RTU3	151.4	A	8.9	DISHWASHER RCPT & HWC1	20/1	18	30AS	
		19			151.4	B	13.5	MICROWAVE RCPT	20/1	20	30AS	
		21		SPACE		A	11.6	REFRIGERATOR 3 RCPT (6)	20/1	22	30AS	
	30AS	23	30/1	RCPT @ RTU1,2,3	13.5	B	15	WASHER RCPT (RM 119)	20/1	24	30AS	
		25		SPACE		A	4.4	KITCHEN HOOD VENT J-BOX	20/1	26	30AS	
		27		SPACE		B	46	DOMESTIC WATER HEATER DWH1	60/2	28	60A2	
	30A2	29	20/2	DOMESTIC WATER BOOSTER PUMP BP1	12	A	46			30		
		31			12	B	0.75	HWC1	15/1	32	30AS	
	70A2	33	70/2	FIRE PUMP FP1	68	A	9	WASHER EXTRACTOR RCPT (RM 119)	15/1	34	30AS	
		35			68	B		SPACE		36		
		37		SPACE		A		SPACE		38		
		39		SPD		B		SPACE		40		
		41				A		SPACE		42		

L-N VOLTS	120				
L-L VOLTS	240	Ph A	=	594	AMPS
1 Ph 3 W		Ph B	=	603	AMPS
POLES	42	125%	=	754	AMPS
BUS AMPS	800	100%	=	145	KVA
MLO	800				
CB AIC	22				
AVAIL FLT	16.14 KAIC			ENCLOSURE NEMA	1

KN 1	KN 2	POWER PANEL LD					ELECTRICAL ROOM			KN 2	KN 1
MOTR FEEDR	EQUIP FEEDR	CKT. NO.	TRIP/ POLES	LOAD SERVED	PHASE AMPS		AMPS	LOAD SERVED	TRIP/ POLES	CKT. NO.	EQUIP FEEDR	MOTR FEEDR
	30AS	1	20/1	FIRE ALARM CP, FACP	5	A	1.867	LGHT RM 113	20/1	2	30AS	
	30AS	3	20/1	DATA EQUIPMENT	6	B	2	LGHT RM 114-117		4		
	30AS	5	20/1	RADIO EQUIPMENT	6	A	0.75	LGHT RM 118		6		
		7				B	2.528	LGHT RM 103		8		
	30AS	9	20/1	PARKING LGHT	0.933	A	0.95	LGHT RM 101,102A		10		
		11	20/1	PARKING RCPT	9	B	4.883	LGHT RM 104,105		12		
		13	20/1	EXTERIOR BUILDING RCPT	18	A	2.1	LGHT RM 106,109,110		14		
		15				B	1	LGHT RM 111		16		
		17				A	0.8	LGHT RM 121		18		
		19				B	6	RCPT: RM 111		20		
		21	20/1	CE# & LGHT: RM 107,108,112,119,120	11.24	A	1.5	RCPT: RM 112		22		
		23				B	10.5	RCPT: RM 113		24		
		25				A	3	RCPT: RM 107,108		26		
		27				B	12	RCPT: RM 114-117		28		
		29				A	4.5	RCPT: RM 118		30		
		31				B	10.5	RCPT: RM 101,102A,103		32		
		33				A	7.5	RCPT: RM 104		34		
		35				B	7.5	RCPT: RM 105		36		
		37				A	7.5	RCPT: RM 106,109,119,121	20/1	38		
		39		SPD		B				40		
		41				A	4.25	LGHT TYPE EM,X,WP	20/1	42	30AS	

L-N VOLTS	120				
L-L VOLTS	240	Ph A	=	76	AMPS
1 Ph 3 W		Ph B	=	72	AMPS
POLES	42	125%	=	95	AMPS
BUS AMPS	125	100%	=	19	KVA
MLO	125				
CB AIC	22				
AVAIL FLT	16.14 KAIC			ENCLOSURE NEMA	1

CONDUIT MATRIX					
	RMC	RNC	FMC	MC CABLE	EMT
EXTERIOR EXPOSED	Y				
WITHIN BUILDING			L	Y*	Y
BELOW FINISHED GRADE (HORIZONTAL RUNS)	Y	Y			
BELOW FINISHED GRADE (VERTICAL RUNS)	Y				

L - CONNECTION TO LIGHTS

* WITHIN WALLS & BETWEEN RECEPTACLES ON THE SAME CIRCUIT

POWER CONDUIT SCHEDULE	
NAME	COPPER WIRE
20AS	3/4"C, #12H, #12N, #12G
20A2	3/4"C, 2 #12H, #12G
20MC	MC CABLE, 2 #12, #12 G
20MC2	MC CABLE, 4 #12, #12 G
30AS	3/4"C, #10H, #10N, #10G
30A2	3/4"C, 2 #10H, #10G
30A	3/4"C, 3 - #10, #10G
30WN	3/4"C, 3 - #10H, #10N, #10G
50A	1"C, 3 - #8, #8G
60A	1"C, 3 - #6, #8G
60WN	1"C, 3 - #6H, #6N, #8G
80A	1 1/2"C, 3 - #4, #8G
80AS	1 1/2"C, 2 - #4, #8G
100A	1 1/2"C, 3 - #2, #6G
125A	2"C, 3 - #1, #6G
125WN	2"C, 3 - #1H, #1N, #6G
150A	2"C, 3 - #1/0, #6G
175A	2"C, 3 - #2/0, #4G
200A	2 1/2"C, 3 - #3/0, #4G
200WN	2 1/2"C, 3 - #3/0H, #3/0N, #4G
225A	2 1/2"C, 3 - #4/0, #2G
250A	3"C, 3 - 250KCM, #2G
275A	3"C, 3 - 300KCM, #2G
300A	3"C, 3 - 350KCM, #2G
400A	4"C, 3 - 500KCM, #1G
450A	2 X (2 1/2"C, 3 - #4/0, #2G)
500A	2 X (3"C, 3 - 250KCM, #2G)
600A	2 X (3"C, 3 - 350KCM, #1/0G)
800A	2 X (4"C, 3 - 500KCM, #1/0G)
800AP	3 X (3"C, 3 - 350KCM, #1/0G)
1000A	3 X (4"C, 3 - 500KCM, #2/0G)
1200A	4 X (3"C, 3 - 350KCM, #3/0G)

SERVICE CONDUIT SCHEDULE	
NAME	COPPER
S100A	1 1/2"C, 3 - #2, #2N
S200A	2 1/2"C, 3 - #3/0, #3/0N
S400A	4"C, 3 - 500KCM, 500KCM(N)
S600A	2 X (3"C, 3 - 350KCM, 350KCM(N))
S800A	2 X (4"C, 3 - 500KCM, 500KCM(N))
S800AP	3 X (3"C, 3 - 350KCM, 350KCM(N))
S1000A	3 X (4"C, 3 - 500KCM, 500KCM(N))

KEYED NOTES (#)

1. EXISTING EQUIPMENT AND ELECTRICAL POWER LINES ARE IDENTIFIED BY LIGHTER PEN WEIGHT ON THE DRAWING.
2. CONTRACTOR TO VERIFY LOADS FOR EXISTING DISTRIBUTION PANELS AND PROVIDE NEW TYPEWRITTEN SCHEDULE FOR EACH PANEL. EXISTING PANELS "LA" AND "LB" TO BE UPGRADED TO 16KAIC.
3. PROVIDE GROUND FAULT PROTECTION FOR ELECTRICAL SERVICE.
4. FUTURE ENGINE GENERATOR. REFER TO E–102 FOR GENERATOR LOCATION.
5. NEMA 3R AUTOMATIC TRANSFER SWITCH FOR FUTURE ENGINE GENERATOR CONNECTION. 1000A, 4 WIRE, LISTED AND LABELED AS SUITABLE FOR SERVICE ENTRANCE RATED WITH MINIMUM INTERRUPT RATING OF 22KAIC.
6. INSTALL GFCI TYPE CIRCUIT BREAKER.
7. REFER TO E–103 FOR GROUNDING DETAILS.

KN 1	KN 2	MAIN DISTRIBUTION PANEL MDP					METERING STRUT			KN 2	KN 1
MOTR FEEDR	EQUIP FEEDR	CKT. NO.	TRIP/ POLES	LOAD SERVED	PHASE AMPS		AMPS	LOAD SERVED	TRIP/ POLES	CKT. NO.	EQUIP FEEDR	MOTR FEEDR
	800A2	1	800/2	PANEL LC	594	A	400	PANEL MDPL (EXISTING)	400/2	2	400A2	
		3			603	B	400			4		
		5				A	76	PANEL LC	125/2	6	125A2	
		7		SPD		B	72			8		
		9				A				10		

L-N VOLTS	120				
L-L VOLTS	240	Ph A	=	1070	AMPS
1 Ph 3 W		Ph B	=	1075	AMPS
POLES	10	125%	=	1344	AMPS
BUS AMPS	1200	100%	=	258	KVA
MCB AMPS	1000				
CB AIC	22				
AVAIL FLT	19.66 KAIC			ENCLOSURE NEMA	3R

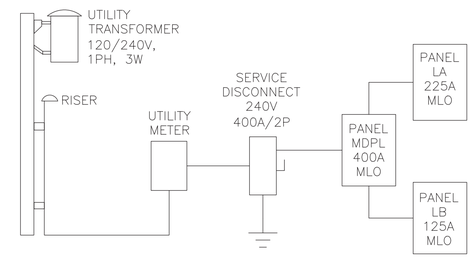

EXISTING ONE–LINE DIAGRAM (1)
SCALE: NONE

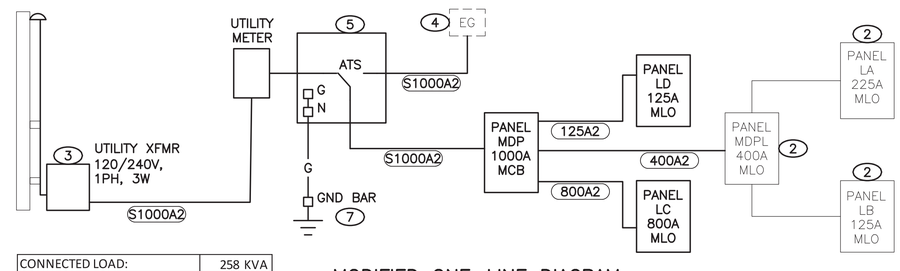

CONNECTED LOAD:	258 KVA
DEMAND LOAD:	224 KVA
MAXIMUM AVAILABLE FAULT:	19.66 KA

MODIFIED ONE–LINE DIAGRAM
SCALE: NONE

MOLZENCORBIN
2701 Miles Road SE
Albuquerque, New Mexico 87106
505 242 5700 office
505 242 0673 fax
MolzenCorbin.com

NUMERIC SCALE CONFIRMATION
DRAWINGS ARE DEPICTED AT INTENDED NUMERIC SCALES
IF THIS BAR EQUALS ONE INCH

DANIEL E. GONZALES NEW MEXICO 19969 PROFESSIONAL ENGINEER
6-12-19

REV NO	REV DATE	DESCRIPTION

PROJECT NUMBER: SFC182–11
DESIGNED BY: NW
DRAWN BY: NW
CHECKED BY: DG
PRIME DESIGN PROFESSIONAL: JOHN Q. PATE
PROJECT DATE: JUNE 2019

ELECTRICAL
ONE-LINE DIAGRAM
AND SCHEDULES

LA PUEBLA FIRE STATION ADDITION
SANTA FE COUNTY
LA PUEBLA, NEW MEXICO

E-601
SHEET

© COPYRIGHT

PLOT DATE: 6/13/2019 4:50 PM
SAVE DATE: 6/13/2019 4:42 PM
I:\SANTA FE COUNTY\SFC182-11 LA PUEBLA FIRE\DWGS\E(LP-601

LUMINAIRE & EQUIPMENT SCHEDULE

TYPE	DESCRIPTION	VOLTS	LUMENS	WATTAGE	MFR	MODEL	MOUNTING	Q-TY
A	6" LED DOWNLIGHT. CLEAR ALZAK REFLECTOR. 3500K	120	1500	21	ELITE	HH6-LED-1500L-DIM10-120-WD-35K-90+-HH6-6501-CL-WH	RECESSED	33
B	2X2 RECESSED LED FLAT PANEL. 3500K	120	3000	30	ELITE	22-FPL1-LED-3000L-DIM10-MVOLT-35K-85	RECESSED	23
C	ARCHITECTURAL VANITY. UP/DOWN LIGHT HOUSING WITH FRONT SLOT. 3500K. MATTE SILVER FINISH.	120	4056	40	TERON	VCY48-L36.0-120-277-SLT-TE500-SM-35K	SURFACE WALL	2
D	8' (2x4') LENSED LED STRIPLIGHT. CONTINUOUS ROW MOUNTING. 3500K.	120	3000	24	ELITE	4-OC1-LED-3000L-DIM10-MVOLT-35K-85	SURFACE CEILING	4
EM	WHITE THERMOPLASTIC EMERGENCY UNIT.	120	700	10	ELITE	ELM-LED-812-W	SURFACE	18
F1	4' INDIRECT/DIRECT LED PENDANT. SATIN LENS. 24" AIRCRAFT CABLE MOUNT. DUST COVER. DUAL CIRCUIT. 3500K. ONBOARD OCC SENSOR. ALUMINUM FINISH. DIMMING TO 1%.	120	4000	32	LUMENWERX	VIA4PDI-HLO-LED-90-500-500-35-4'-UNV-D1-2-53WAC24-AL-OMS-DC	PENDANT	1
F2	8' INDIRECT/DIRECT LED PENDANT. SATIN LENS. 24" AIRCRAFT CABLE MOUNT. DUST COVER. DUAL CIRCUIT. 3500K. ONBOARD OCC SENSOR AT END OF RUN. ALUMINUM FINISH. DIMMING TO 1%.	120	8000	64	LUMENWERX	VIA4PDI-HLO-LED-90-500-500-35-8'-UNV-D1-2-53WAC24-AL-OMS-DC	PENDANT	5
F3	12' INDIRECT/DIRECT LED PENDANT. SATIN LENS. 24" AIRCRAFT CABLE MOUNT. DUST COVER. DUAL CIRCUIT. 3500K. ONBOARD OCC SENSOR AT END OF RUN. ALUMINUM FINISH. DIMMING TO 1%.	120	12000	96	LUMENWERX	VIA4PDI-HLO-LED-90-500-500-35-12'-UNV-D1-2-53WAC24-AL-OMS-DC	PENDANT	3
F4	16' INDIRECT/DIRECT LED PENDANT. SATIN LENS. 24" AIRCRAFT CABLE MOUNT. DUST COVER. DUAL CIRCUIT. 3500K. ONBOARD OCC SENSOR AT END OF RUN. ALUMINUM FINISH. DIMMING TO 1%.	120	16000	128	LUMENWERX	VIA4PDI-HLO-LED-90-500-500-35-16'-UNV-D1-2-53WAC24-AL-OMS-DC	PENDANT	1
G	3" DIRECT CYLINDER. 3500K. GLASS LENS. ANODIC NATURAL FINISH.	120	1000	9.1	SPECTRUM	DC0312XT-10L-35HK-OSD-DO10X-CMLC24-WC-PTI-MW	PENDANT	3
H	6" DIAMETER CYLINDER PENDANT. EXTERIOR RATED. BRONZE FINISH.	120	514	11	LUMENPULSE	ELMS10-SO-120-30K-CRI80-S120-O-BRZ-NO	EXTERIOR PENDANT	2
S	OUTDOOR LIGHTING POLE. SQUARE STRAIGHT STEEL. 12' OVERALL HEIGHT.	-	-	-	HUBBELL	SSS-H-12-50-A-1-S2-DB-UL	CONCRETE BASE	2
S1	PARKING LOT LED LIGHTING FIXTURE, ARM MOUNTING, DARK BRONZE, 15' MOUNTING HEIGHT.	120	7296	56	HUBBELL	ASL-A-16L-3K-140-3-U-DB-SCP40F	POLE W/#2 DRILL PATTERN	2
WP	LOW PROVILE EXTERIOR WALL PACK. TYPE III DISTRIBUTION. BRONZE FINISH. BATTERY BACKUP. PHOTOCONTROL. MOTION SENSOR FIELD INSTALLED.	120	4389	40	TRACELITE	WLZ4-3-3K-BR-BB-PC/TL-SCES-L2-BR	EXTERIOR WALL	8
X	WHITE THERMOPLASTIC EXIT SIGN. BATTERY BACKUP.	120	-	2	ELITE	ELX-603-R-W	UNIVERSAL	5

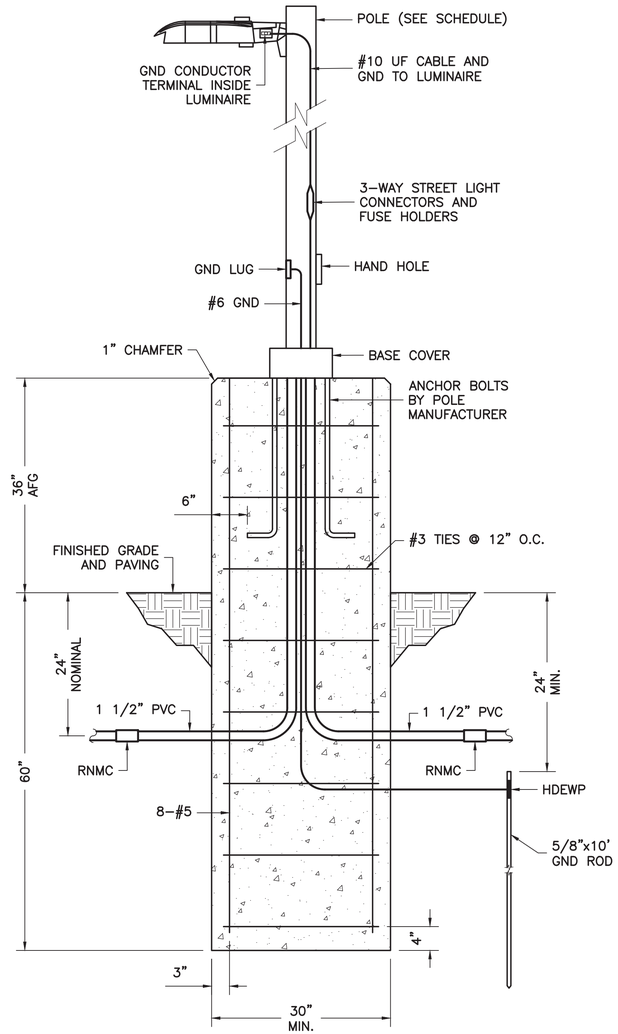

LIGHTING POLE DETAIL
SCALE: NONE

REFER TO E-105 FOR BUILDING ADDITION LIGHTING PLAN.

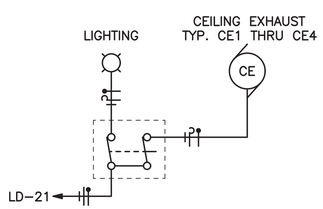

CEILING EXHAUST/LIGHTING
SCALE: NONE

CONTRACTOR TO PROVIDE AND INSTALL ON-OFF SWITCH. WIRING TYPICAL FOR CE1 THROUGH CE4.

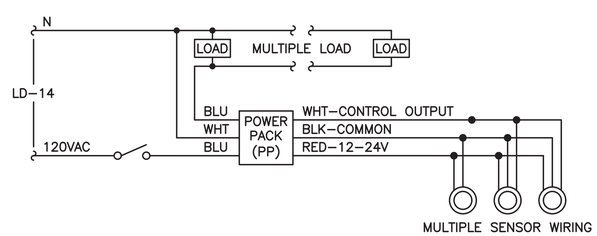

CORRIDOR LIGHTING DIAGRAM
SCALE: NONE

MOLZENCORBIN
2701 Miles Road SE
Albuquerque, New Mexico 87106
505 242 5700 office
505 242 0673 fax
MolzenCorbin.com

NUMERIC SCALE CONFIRMATION
DRAWINGS ARE DEPICTED AT INTENDED NUMERIC SCALES
IF THIS BAR EQUALS ONE INCH

DANIEL E. GONZALES NEW MEXICO 19969 PROFESSIONAL ENGINEER
6-12-19

REV NO	REV DATE	DESCRIPTION

PROJECT NUMBER: SFC182-11
DESIGNED BY: NW
DRAWN BY: NW
CHECKED BY: DG
PRIME DESIGN PROFESSIONAL: JOHN Q. PATE
PROJECT DATE: JUNE 2019

ELECTRICAL
LIGHTING SCHEDULE
AND WIRING DIAGRAM

LA PUEBLA FIRE STATION ADDITION
SANTA FE COUNTY
LA PUEBLA, NEW MEXICO

E-602
SHEET

© COPYRIGHT

PLOT DATE: 6/13/2019 4:50 PM
SAVE DATE: 6/13/2019 4:47 PM
I:\SANTA FE COUNTY\SFC182-11 LA PUEBLA FIRE\DWGS\ELP-602