LOUIS BERGER
2019 GALISTEO ST. SUITE M-1
SANTA FE, NEW MEXICO

PROJECT NO.	SHEET NO.
0132	PHX-01

13+30.00

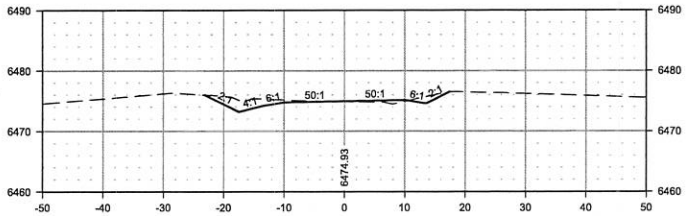

13+20.00

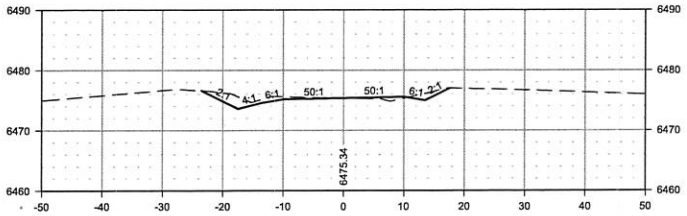

13+10.00

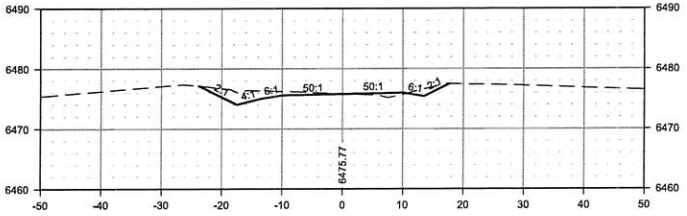

SANTA FE COUNTY

PINON HILLS ALL WEATHER CROSSING

CROSS SECTIONS

SANTA FE COUNTY

DESIGNED BY: PE & IPT	DRAWN BY: CS	CHECKED BY: RKR	APPROVED BY: RKR	DATE: 11/25/15

PROJECT NO. 0132 SHEET PHX-01

File: C:\Users\csarchet\appdata\local\temp\AcPublish_4240\Pinon Hills_X Sections.dwg Date: Dec 07, 2015-10:46am

LOUIS BERGER
2019 GALISTEO ST. SUITE M-1
SANTA FE, NEW MEXICO

PROJECT NO.	SHEET NO.
0132	PHX-02

13+60.00

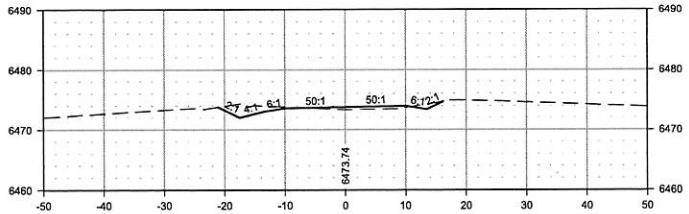

13+50.00

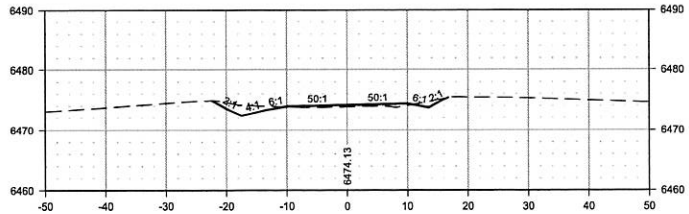

13+40.00

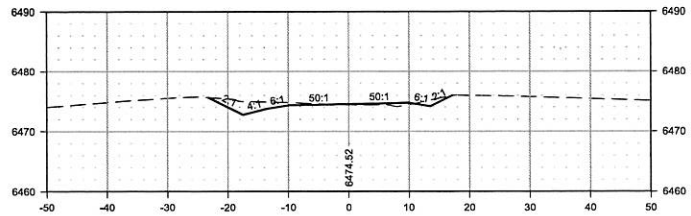

SANTA FE COUNTY

PINON HILLS ALL WEATHER CROSSING

CROSS SECTIONS

SANTA FE COUNTY

DESIGNED BY: PE & IPT	DRAWN BY: CS	CHECKED BY: RKR	APPROVED BY: RKR	DATE: 11/25/15

PROJECT NO. 0132 SHEET PHX-02

File: C:\Users\cscrichel\appdata\local\temp\AcPublish_4240\Pinon Hills_X Sections.dwg Date: Dec 07, 2015-10:48am

LOUIS BERGER
2019 GALISTEO ST. SUITE M-1
SANTA FE, NEW MEXICO

PROJECT NO.	SHEET NO.
0132	PHX-03

13+90.00

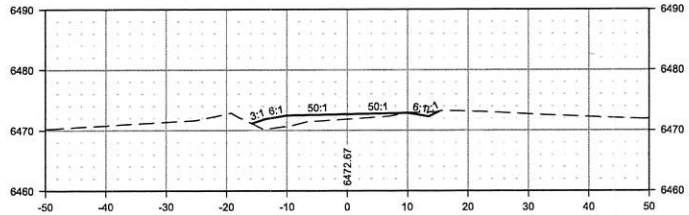

13+80.00

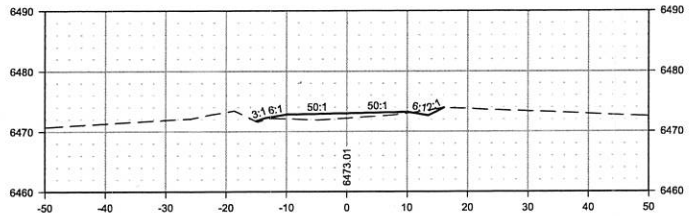

13+70.00

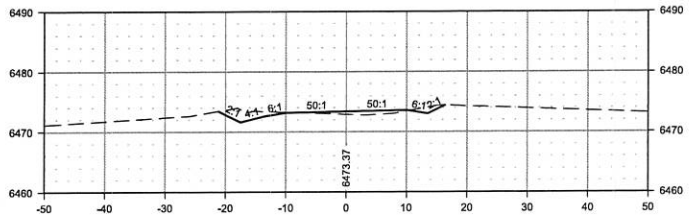

SANTA FE COUNTY

PINON HILLS ALL WEATHER CROSSING

CROSS SECTIONS

SANTA FE COUNTY

DESIGNED BY: PE & IPT	DRAWN BY: CS	CHECKED BY: RKR	APPROVED BY: RKR	DATE: 11/25/15

PROJECT NO. 0132 SHEET PHX-03

File: C:\Users\csanchez\appdata\local\temp\AcPublish_4240\Pinon Hills_X Sections.dwg Date: Dec 07, 2015-10:46am

LOUIS BERGER
2019 GALISTEO ST. SUITE M-1
SANTA FE, NEW MEXICO

PROJECT NO.	SHEET NO.
0132	PHX-04

14+20.00

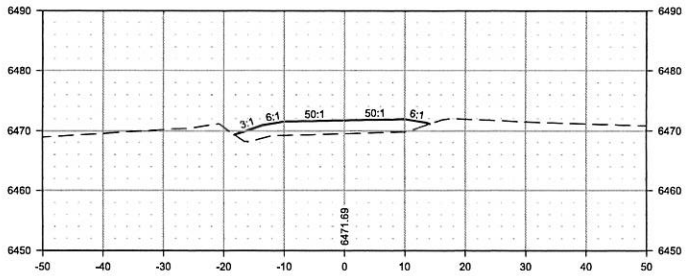

14+10.00

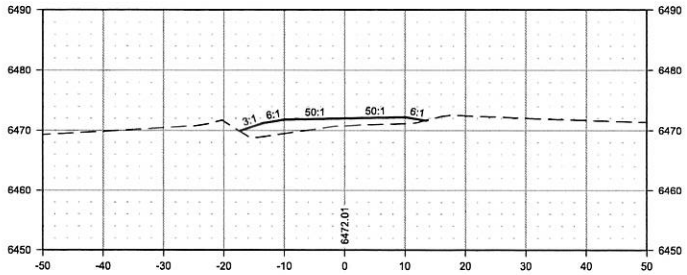

14+00.00

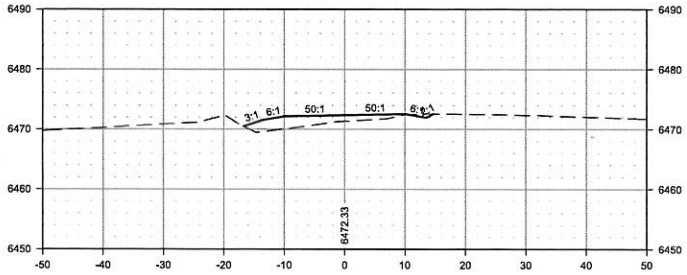

SANTA FE COUNTY

PINON HILLS ALL WEATHER CROSSING

CROSS SECTIONS

SANTA FE COUNTY

DESIGNED BY: PE & IPT	DRAWN BY: CS	CHECKED BY: RKR	APPROVED BY: RKR	DATE: 11/25/15

PROJECT NO. 0132 SHEET PHX-04

LOUIS BERGER
2019 GALISTEO ST. SUITE M-1
SANTA FE, NEW MEXICO

PROJECT NO.	SHEET NO.
0132	PHX-05

14+50.00

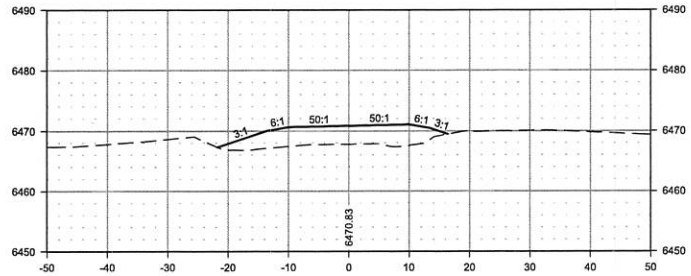

14+40.00

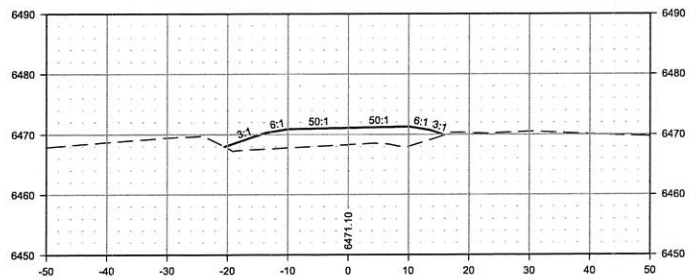

14+30.00

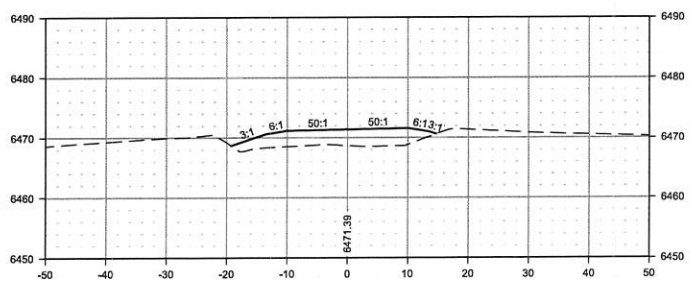

SANTA FE COUNTY

PINON HILLS ALL WEATHER CROSSING

CROSS SECTIONS

SANTA FE COUNTY

DESIGNED BY: PE & IPT	DRAWN BY: CS	CHECKED BY: RKR	APPROVED BY: RKR	DATE: 11/25/15

PROJECT NO. 0132 SHEET PHX-05

File: C:\Users\asanchez\appdata\local\temp\AcPublish_4240\Pinon Hills_X Sections.dwg Date: Dec 07, 2015-10:47am

LOUIS BERGER
2019 GALISTEO ST. SUITE M-1
SANTA FE, NEW MEXICO

PROJECT NO.	SHEET NO.
0132	PHX-06

14+80.00

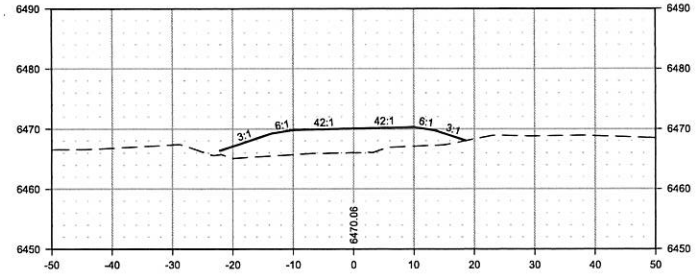

14+70.00

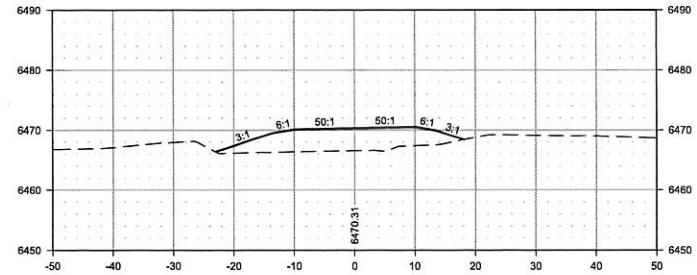

14+60.00

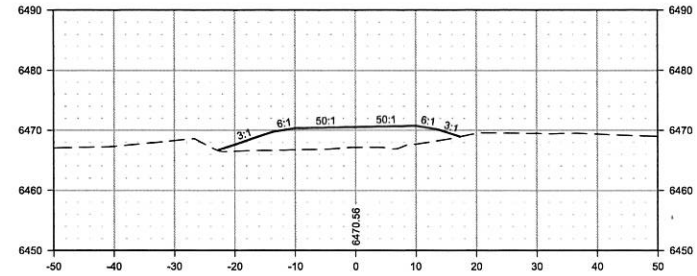

SANTA FE COUNTY

PINON HILLS ALL WEATHER CROSSING

CROSS SECTIONS

SANTA FE COUNTY

DESIGNED BY: PE & IPT	DRAWN BY: CS	CHECKED BY: RKR	APPROVED BY: RKR	DATE: 11/25/15

PROJECT NO. 0132 SHEET PHX-06

LOUIS BERGER
2019 GALISTEO ST. SUITE M-1
SANTA FE, NEW MEXICO

PROJECT NO.	SHEET NO.
0132	PHX-07

15+10.00

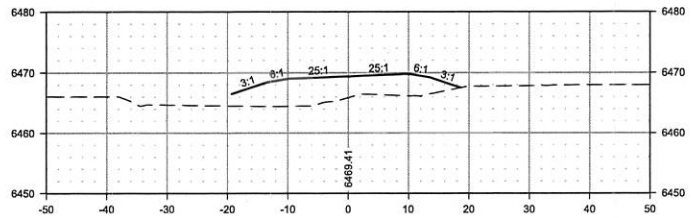

15+00.00

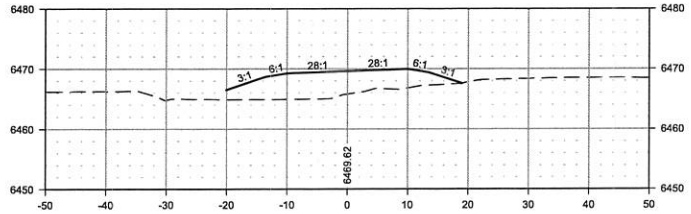

14+90.00

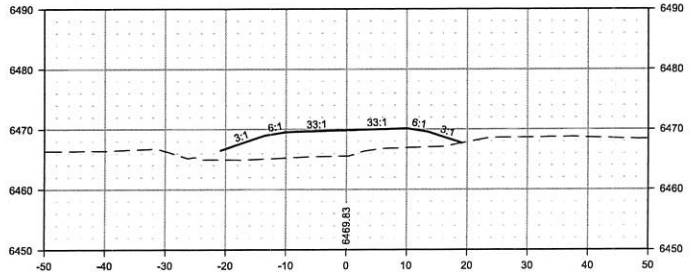

SANTA FE COUNTY

PINON HILLS ALL WEATHER CROSSING

CROSS SECTIONS

SANTA FE COUNTY

DESIGNED BY: PE & IPT	DRAWN BY: CS	CHECKED BY: RKR	APPROVED BY: RKR	DATE: 11/25/15

PROJECT NO. 0132 SHEET PHX-07

File: C:\Users\esanchez\appdata\local\temp\AcPublish_4240\Pinon Hills_X Sections.dwg Date: Dec 07, 2015-10:47am

LOUIS BERGER
2019 GALISTEO ST. SUITE M-1
SANTA FE, NEW MEXICO

PROJECT NO.	SHEET NO.
0132	PHX-08

15+40.00

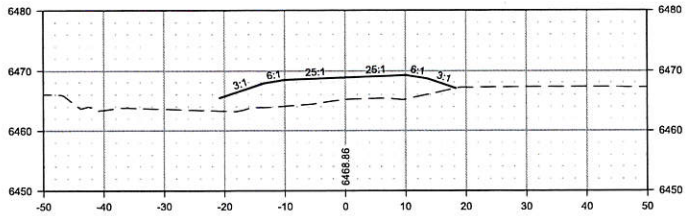

15+30.00

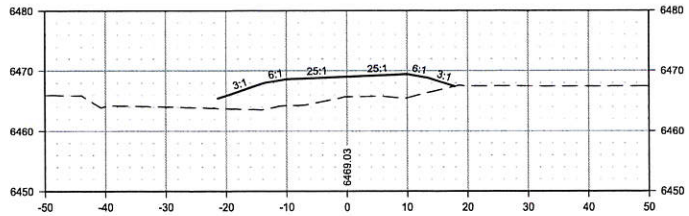

15+20.00

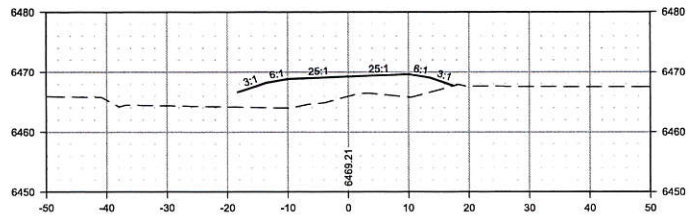

SANTA FE COUNTY

PINON HILLS ALL WEATHER CROSSING

CROSS SECTIONS

SANTA FE COUNTY

DESIGNED BY: PE & IPT	DRAWN BY: CS	CHECKED BY: RKR	APPROVED BY: RKR	DATE: 11/25/15

PROJECT NO. 0132 SHEET PHX-08

LOUIS BERGER
2019 GALISTEO ST. SUITE M-1
SANTA FE, NEW MEXICO

PROJECT NO.	SHEET NO.
0132	PHX-09

15+70.00

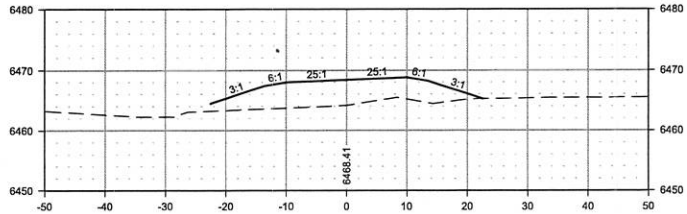

15+60.00

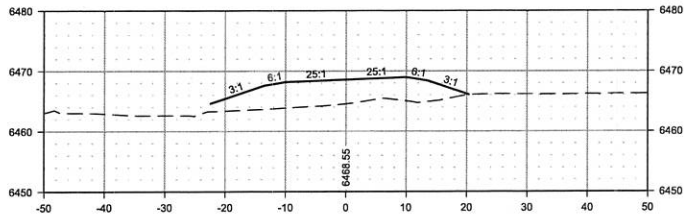

15+50.00

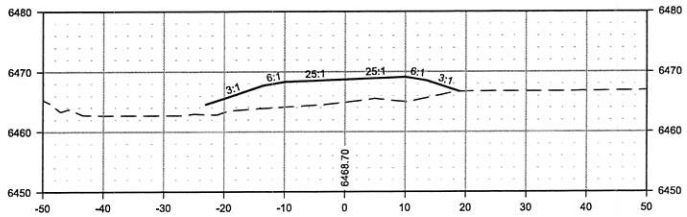

SANTA FE COUNTY

PINON HILLS ALL WEATHER CROSSING

CROSS SECTIONS

SANTA FE COUNTY

DESIGNED BY: PE & IPT	DRAWN BY: CS	CHECKED BY: RKR	APPROVED BY: RKR	DATE: 11/25/15

PROJECT NO. 0132 SHEET PHX-09

LOUIS BERGER
2019 GALISTEO ST. SUITE M-1
SANTA FE, NEW MEXICO

PROJECT NO.	SHEET NO.
0132	PHX-10

16+00.00

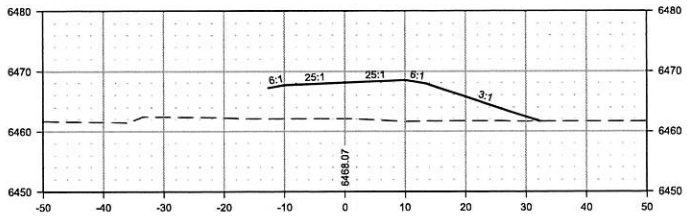

15+90.00

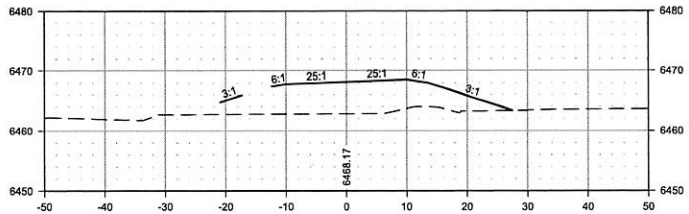

15+80.00

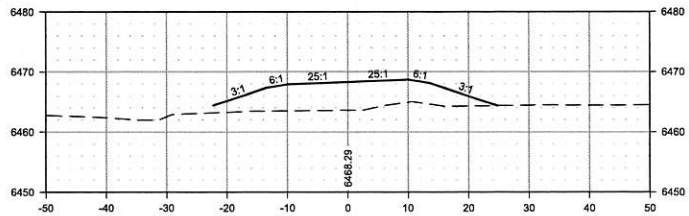

SANTA FE COUNTY

PINON HILLS ALL WEATHER CROSSING

CROSS SECTIONS

SANTA FE COUNTY

DESIGNED BY: PE & IPT	DRAWN BY: CS	CHECKED BY: RKR	APPROVED BY: RKR	DATE: 11/25/15

PROJECT NO. 0132 SHEET PHX-10

LOUIS BERGER
2019 GALISTEO ST. SUITE M-1
SANTA FE, NEW MEXICO

PROJECT NO.	SHEET NO.
0132	PHX-11

16+30.00

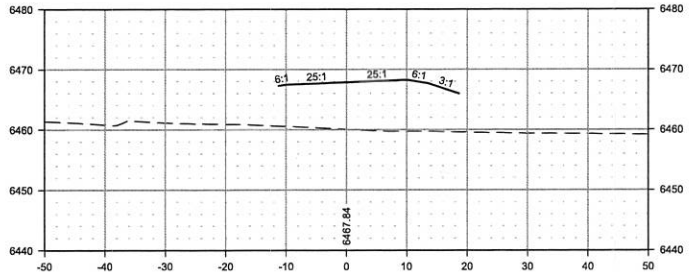

16+20.00

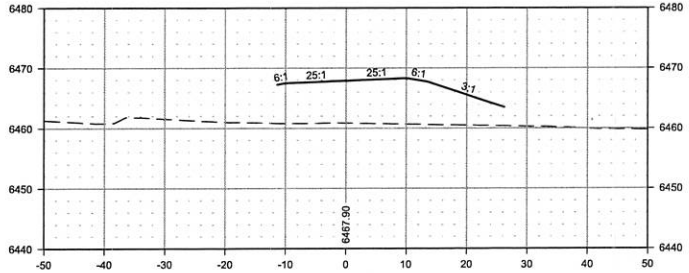

16+10.00

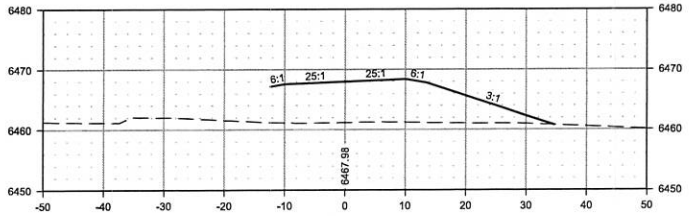

SANTA FE COUNTY

PINON HILLS ALL WEATHER CROSSING

CROSS SECTIONS

DESIGNED BY: PE & IPT	DRAWN BY: CS	CHECKED BY: RKR	APPROVED BY: RKR	DATE: 11/25/15

PROJECT NO. 0132 SHEET PHX-11

SANTA FE COUNTY

LOUIS BERGER
2019 GALISTEO ST. SUITE M-1
SANTA FE, NEW MEXICO

PROJECT NO.	SHEET NO.
0132	PHX-12

16+60.00

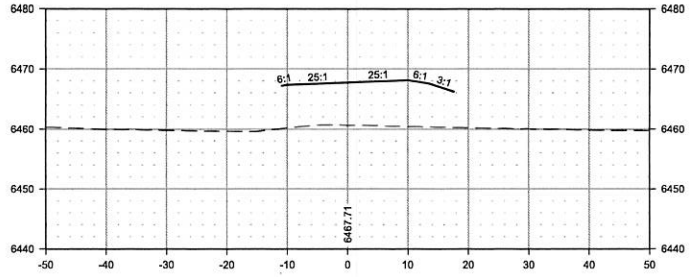

16+50.00

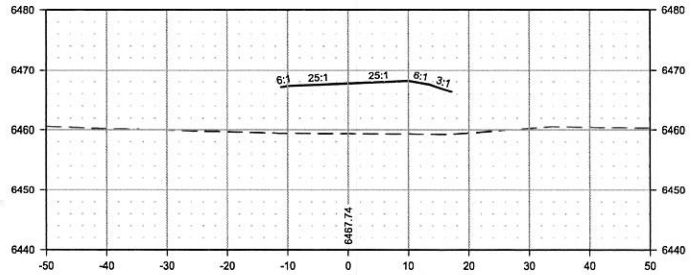

16+40.00

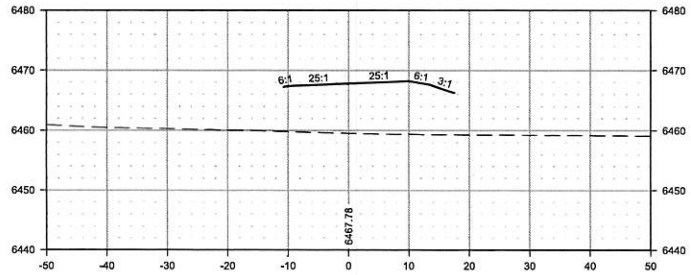

SANTA FE COUNTY

PINON HILLS ALL WEATHER CROSSING

CROSS SECTIONS

SANTA FE COUNTY

DESIGNED BY: PE & IPT	DRAWN BY: CS	CHECKED BY: RKR	APPROVED BY: RKR	DATE: 11/25/15

PROJECT NO. 0132 SHEET PHX-12

LOUIS BERGER
2019 GALISTEO ST. SUITE M-1
SANTA FE, NEW MEXICO

PROJECT NO.	SHEET NO.
0132	PHX-13

16+90.00

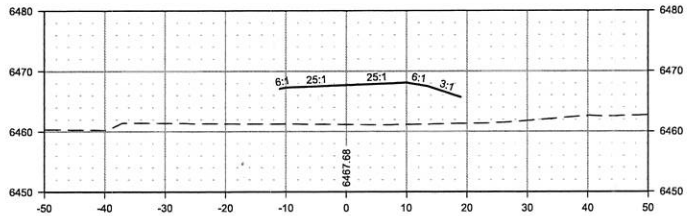

16+80.00

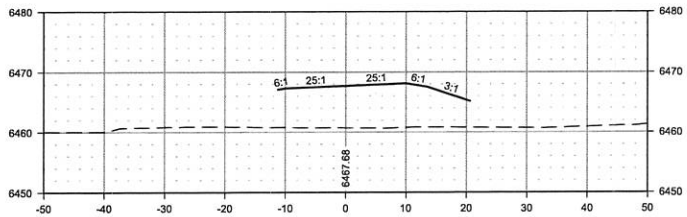

16+70.00

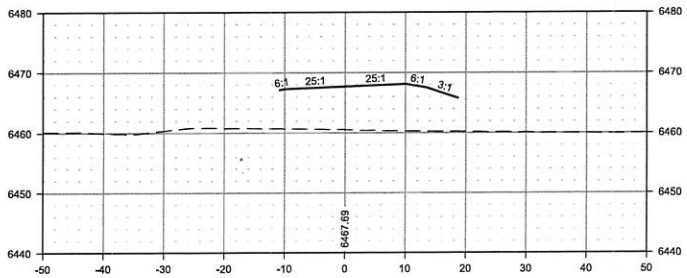

SANTA FE COUNTY

PINON HILLS ALL WEATHER CROSSING

CROSS SECTIONS

DESIGNED BY: PE & IPT	DRAWN BY: CS	CHECKED BY: RKR	APPROVED BY: RKR	DATE: 11/25/15

PROJECT NO. 0132 SHEET PHX-13

SANTA FE COUNTY

LOUIS BERGER
2019 GALISTEO ST. SUITE M-1
SANTA FE, NEW MEXICO

PROJECT NO.	SHEET NO.
0132	PHX-14

17+20.00

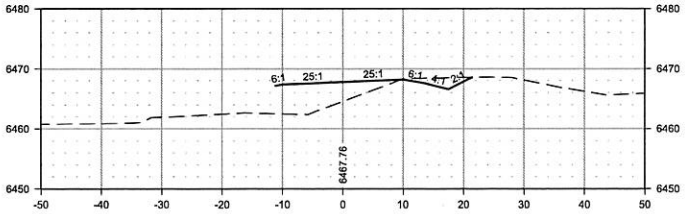

17+10.00

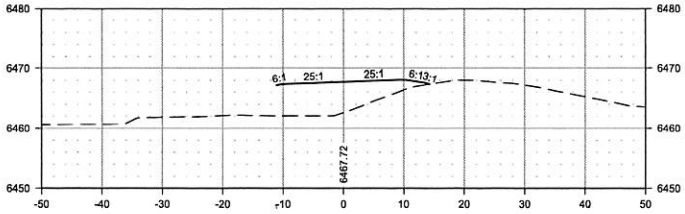

17+00.00

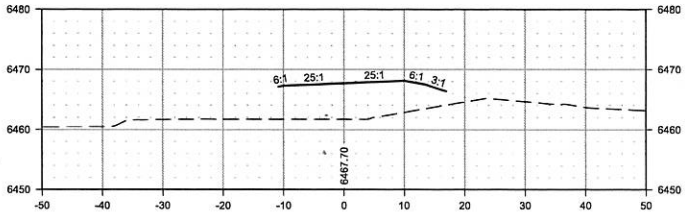

SANTA FE COUNTY

PINON HILLS ALL WEATHER CROSSING

CROSS SECTIONS

SANTA FE COUNTY

DESIGNED BY: PE & IPT	DRAWN BY: CS	CHECKED BY: RKR	APPROVED BY: RKR	DATE: 11/25/15

PROJECT NO. 0132 SHEET PHX-14

LOUIS BERGER
2019 GALISTEO ST. SUITE M-1
SANTA FE, NEW MEXICO

PROJECT NO.	SHEET NO.
0132	PHX-15

17+50.00

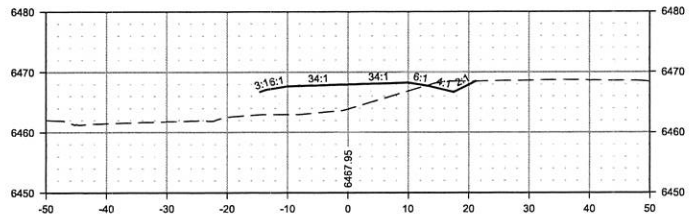

17+40.00

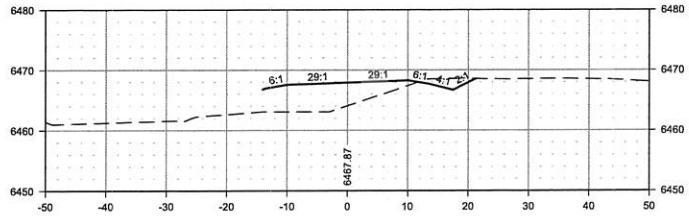

17+30.00

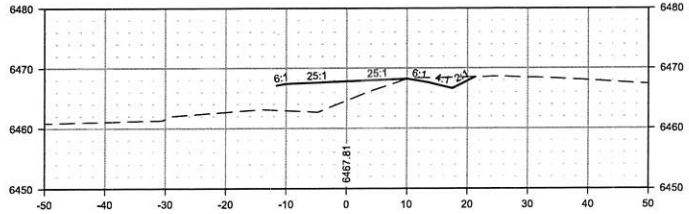

SANTA FE COUNTY

PINON HILLS ALL WEATHER CROSSING

CROSS SECTIONS

SANTA FE COUNTY

DESIGNED BY: PE & IPT	DRAWN BY: CS	CHECKED BY: RKR	APPROVED BY: RKR	DATE: 11/25/15

PROJECT NO. 0132 SHEET PHX-15

File: C:\Users\psanchez\appdata\local\temp\AcPublish_4240\Pinon Hills_X Sections.dwg Date: Dec 07, 2015-10:47am

LOUIS BERGER
2019 GALISTEO ST. SUITE M-1
SANTA FE, NEW MEXICO

PROJECT NO.	SHEET NO.
0132	PHX-16

17+80.00

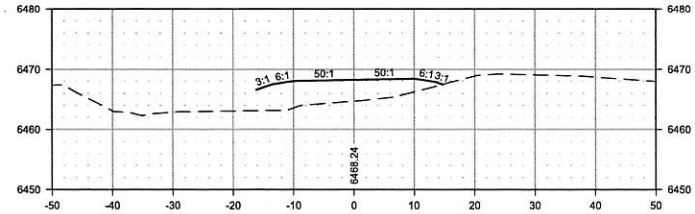

17+70.00

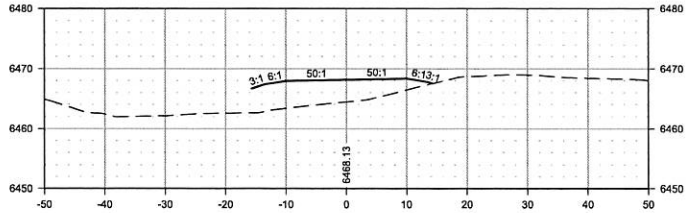

17+60.00

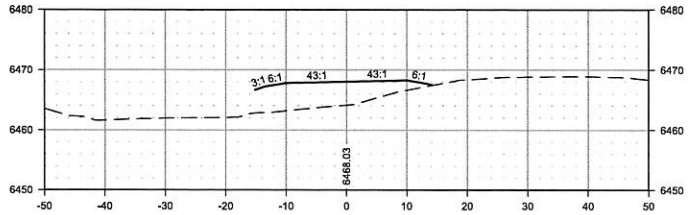

SANTA FE COUNTY

PINON HILLS ALL WEATHER CROSSING

CROSS SECTIONS

SANTA FE COUNTY

DESIGNED BY: PE & IPT	DRAWN BY: CS	CHECKED BY: RKR	APPROVED BY: RKR	DATE: 11/25/15

PROJECT NO. 0132 SHEET PHX-16

LOUIS BERGER
2019 GALISTEO ST. SUITE M-1
SANTA FE, NEW MEXICO

PROJECT NO.	SHEET NO.
0132	PHX-17

18+10.00

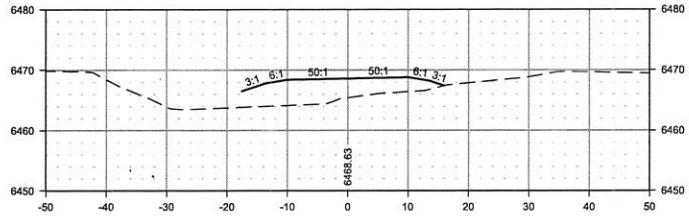

18+00.00

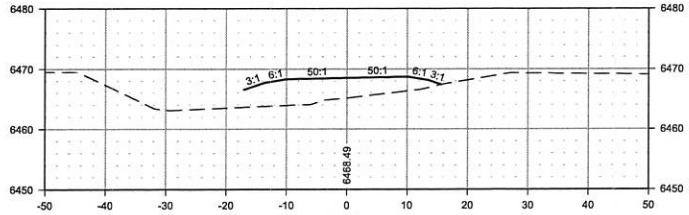

17+90.00

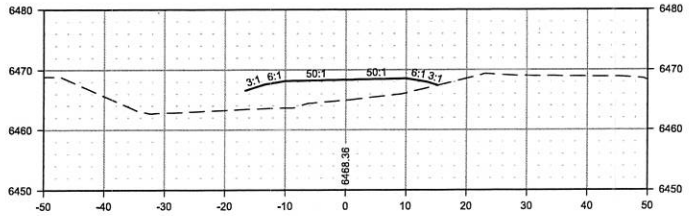

SANTA FE COUNTY

PINON HILLS ALL WEATHER CROSSING

CROSS SECTIONS

SANTA FE COUNTY

DESIGNED BY: PE & IPT	DRAWN BY: CS	CHECKED BY: RKR	APPROVED BY: RKR	DATE: 11/25/15

PROJECT NO. 0132 SHEET PHX-17

File: C:\Users\casanchez\appdata\local\temp\AcPublish_4240\Pinon Hills_X Sections.dwg Date: Dec 07, 2015-10:47am

LOUIS BERGER
2019 GALISTEO ST. SUITE M-1
SANTA FE, NEW MEXICO

PROJECT NO.	SHEET NO.
0132	PHX-18

18+40.00

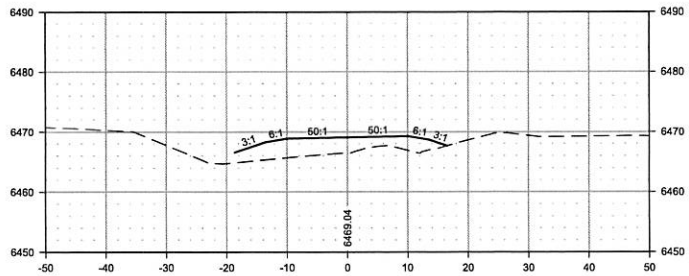

18+30.00

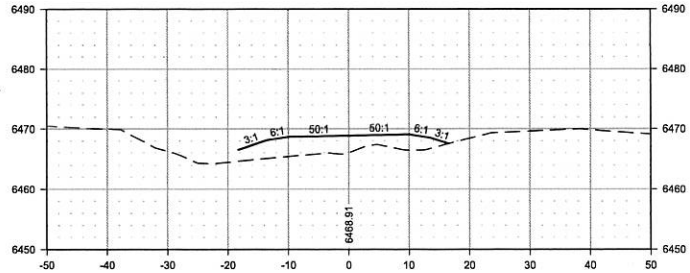

18+20.00

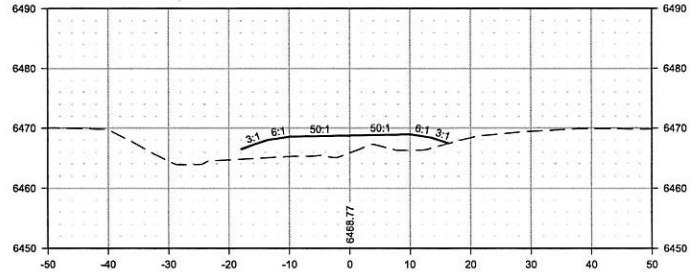

SANTA FE COUNTY

PINON HILLS ALL WEATHER CROSSING

CROSS SECTIONS

SANTA FE COUNTY

DESIGNED BY: PE & IPT	DRAWN BY: CS	CHECKED BY: RKR	APPROVED BY: RKR	DATE: 11/25/15

PROJECT NO. 0132 SHEET PHX-18

File: C:\Users\csanchez\apodata\local\temp\AcPublish_4240\Pinon Hills_X Sections.dwg Date: Dec 07, 2015-10:47am

LOUIS BERGER
2019 GALISTEO ST. SUITE M-1
SANTA FE, NEW MEXICO

PROJECT NO.	SHEET NO.
0132	PHX-19

18+70.00

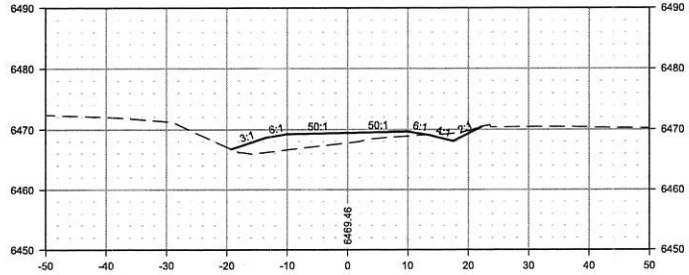

18+60.00

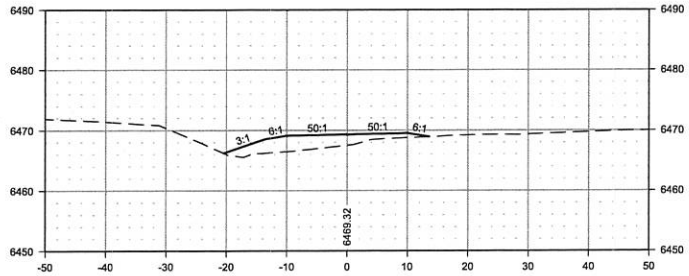

18+50.00

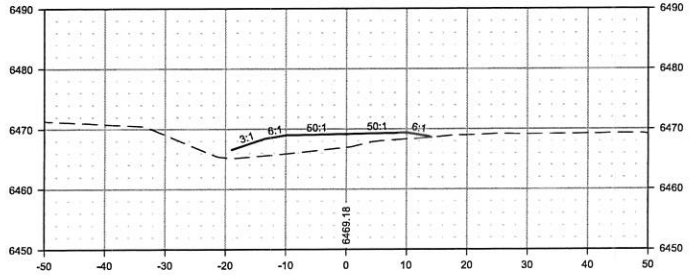

SANTA FE COUNTY

PINON HILLS ALL WEATHER CROSSING

CROSS SECTIONS

SANTA FE COUNTY

DESIGNED BY: PE & IPT	DRAWN BY: CS	CHECKED BY: RKR	APPROVED BY: RKR	DATE: 11/25/15

PROJECT NO. 0132 SHEET PHX-19

File: C:\Users\csanchez\appdata\local\temp\AcPublish_4240\Pinon Hills_X Sections.dwg Date: Dec 07, 2015-10:47am

LOUIS BERGER
2019 GALISTEO ST. SUITE M-1
SANTA FE, NEW MEXICO

PROJECT NO.	SHEET NO.
0132	PHX-20

19+00.00

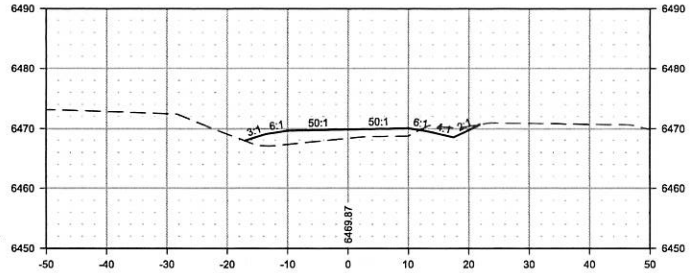

18+90.00

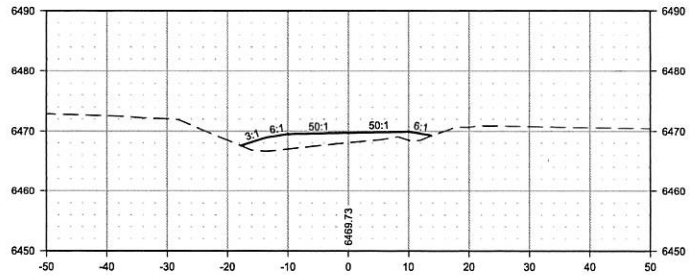

18+80.00

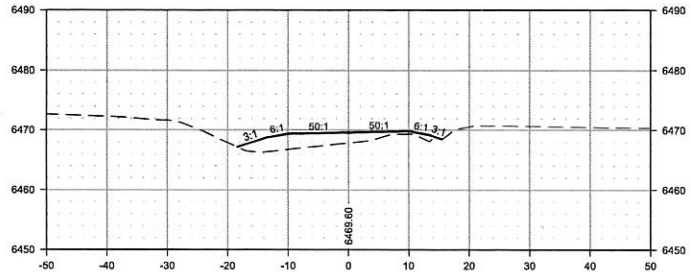

SANTA FE COUNTY

PINON HILLS ALL WEATHER CROSSING

CROSS SECTIONS

SANTA FE COUNTY

DESIGNED BY: PE & IPT	DRAWN BY: CS	CHECKED BY: RKR	APPROVED BY: RKR	DATE: 11/25/15

PROJECT NO. 0132 SHEET PHX-20

LOUIS BERGER
2019 GALISTEO ST. SUITE M-1
SANTA FE, NEW MEXICO

PROJECT NO.	SHEET NO.
0132	PHX-21

19+30.00

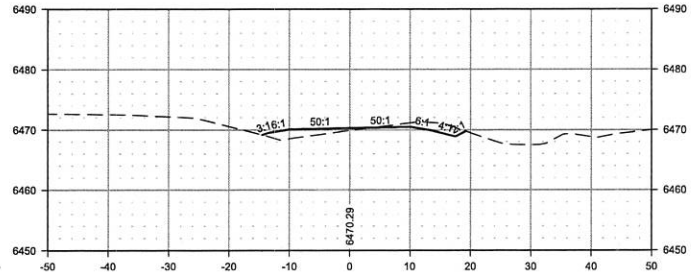

19+20.00

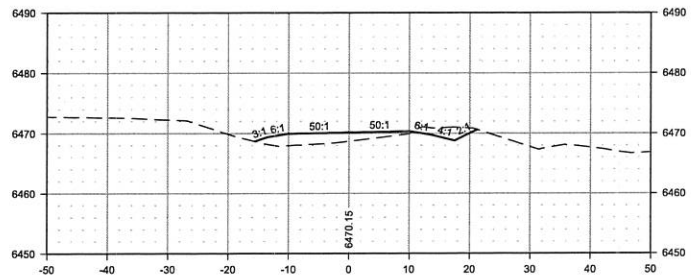

19+10.00

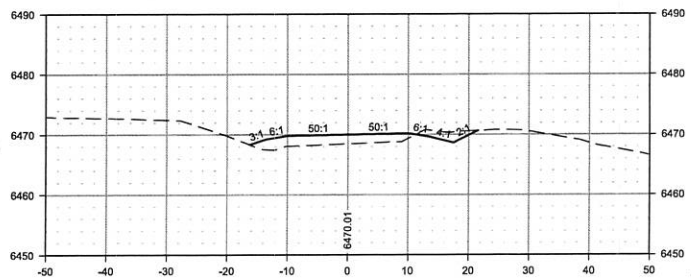

SANTA FE COUNTY

PINON HILLS ALL WEATHER CROSSING

CROSS SECTIONS

DESIGNED BY: PE & IPT	DRAWN BY: CS	CHECKED BY: RKR	APPROVED BY: RKR	DATE: 11/25/15

PROJECT NO. 0132 SHEET PHX-21

SANTA FE COUNTY

LOUIS BERGER
2019 GALISTEO ST. SUITE M-1
SANTA FE, NEW MEXICO

PROJECT NO.	SHEET NO.
0132	PHX-22

19+60.00

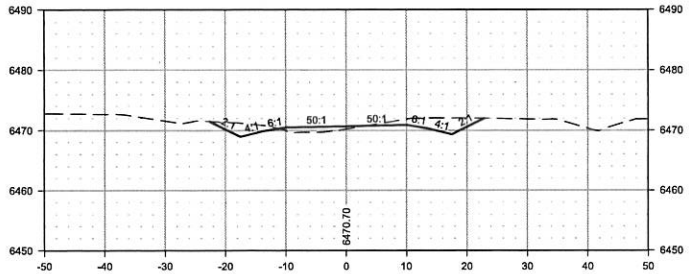

19+50.00

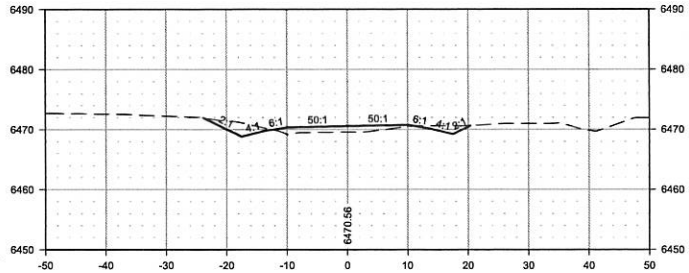

19+40.00

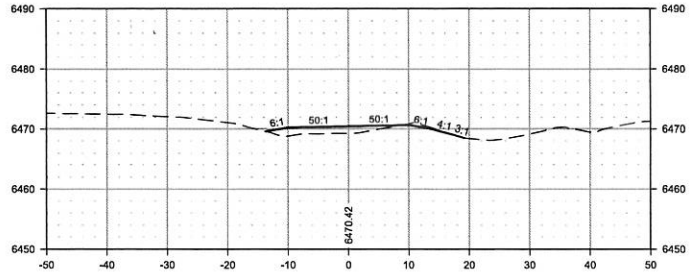

SANTA FE COUNTY

PINON HILLS ALL WEATHER CROSSING

CROSS SECTIONS

SANTA FE COUNTY

DESIGNED BY: PE & IPT	DRAWN BY: CS	CHECKED BY: RKR	APPROVED BY: RKR	DATE: 11/25/15

PROJECT NO. 0132 SHEET PHX-22

LOUIS BERGER
2019 GALISTEO ST. SUITE M-1
SANTA FE, NEW MEXICO

PROJECT NO.	SHEET NO.
0132	PHX-23

19+90.00

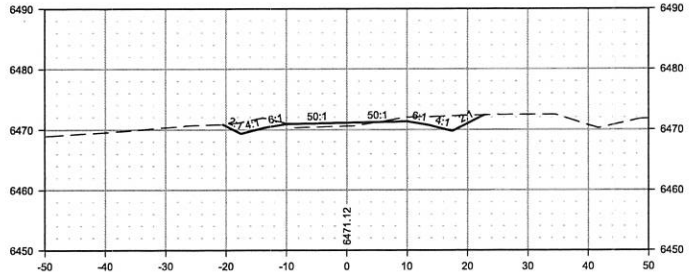

19+80.00

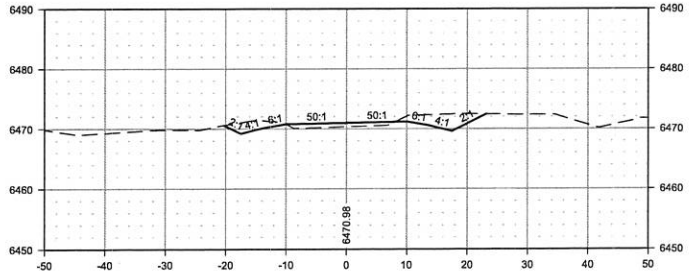

19+70.00

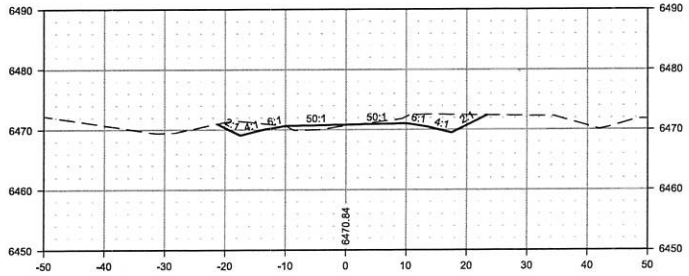

SANTA FE COUNTY

PINON HILLS ALL WEATHER CROSSING

CROSS SECTIONS

DESIGNED BY: PE & IPT	DRAWN BY: CS	CHECKED BY: RKR	APPROVED BY: RKR	DATE: 11/25/15

PROJECT NO. 0132 SHEET PHX-23

SANTA FE COUNTY

LOUIS BERGER
2019 GALISTEO ST. SUITE M-1
SANTA FE, NEW MEXICO

PROJECT NO.	SHEET NO.
0132	PHX-24

20+00.00

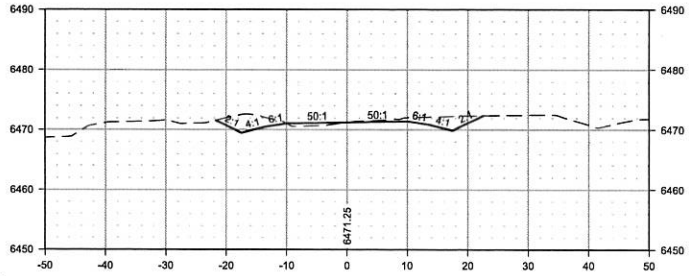

SANTA FE COUNTY

PINON HILLS ALL WEATHER CROSSING

CROSS SECTIONS

SANTA FE COUNTY

DESIGNED BY: PE & IPT	DRAWN BY: CS	CHECKED BY: RKR	APPROVED BY: RKR	DATE: 11/25/15

PROJECT NO. 0132 SHEET PHX-24

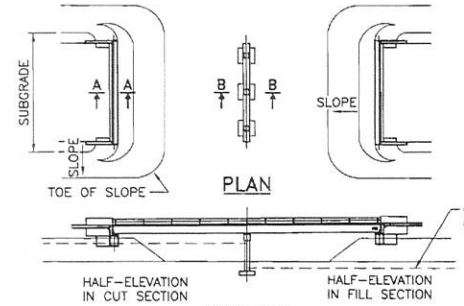

PLAN

PROFILE

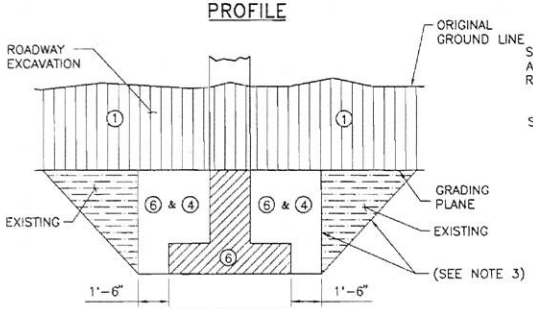

CUT SECTION

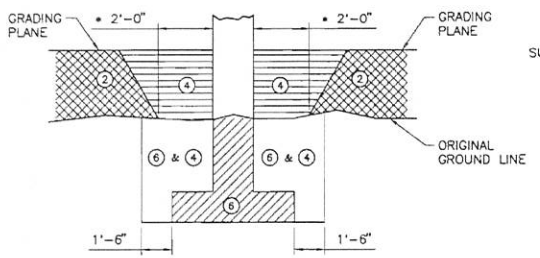

FILL SECTION

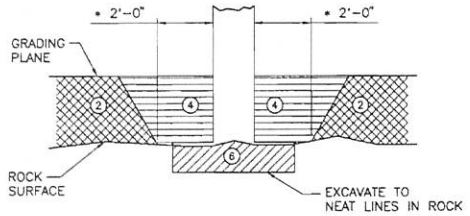

EXCAVATION IN ROCK

SECTION B-B DETAILS

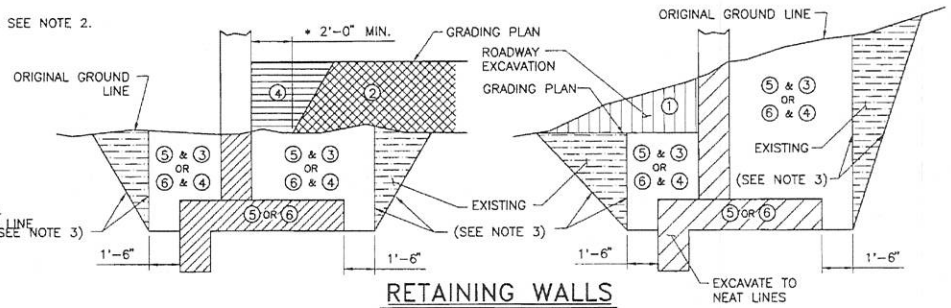

RETAINING WALLS

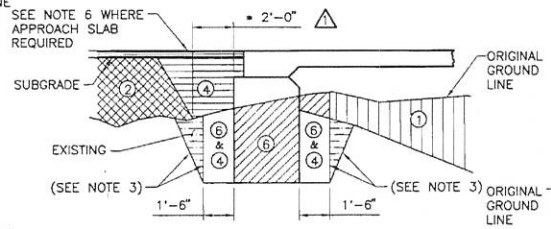

EXCAVATION NORMAL

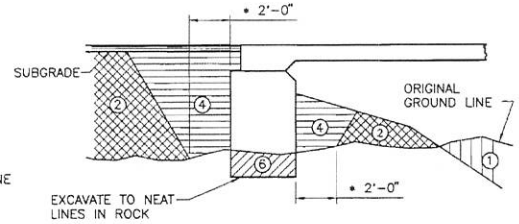

EXCAVATION IN ROCK

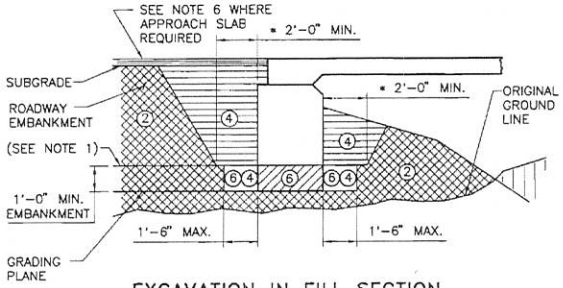

EXCAVATION IN FILL SECTION

SECTION A-A DETAILS

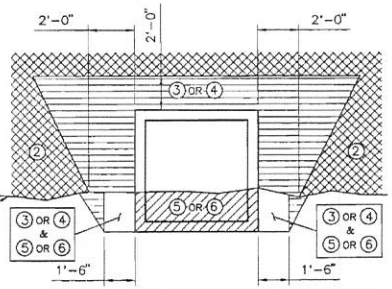

HORIZONTAL LINED AREAS INDICATE BACKFILL FOR THE FULL LENGTH OF THE CBC'S.

METHOD OF PLACING BACKFILL AROUND CBC'S

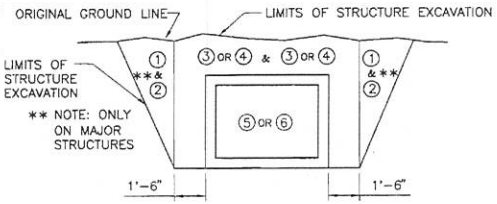

METHOD OF EXCAVATON AROUND CBC'S

KEY #			
1	203	—	ROADWAY EXCAVATION
2	203	—	ROADWAY EMBANKMENT
3 4	206 210	—	STRUCTURE BACKFILL
5 6	206 210	—	STRUCTURE EXCAVATION

NOTE: SECTION 206 – MINOR STRUCTURES
SECTION 210 – MAJOR STRUCTURES

SECTION DESCRIPTION

GENERAL NOTES

1. COMPACT ROADWAY EMBANKMENT 10'-0" (MIN) ABOVE BOTTOM OF ABUTMENT. EXCAVATION TO BOTTOM OF ABUTMENT ELEVATION SHALL BE DELAYED UNTIL THE CONTRACTOR IS READY TO PLACE THE ABUTMENT FORMS AND CONCRETE.
2. ALL DETAILS ARE SHOWN WITH THE ROADWAY EMBANKMENT PLACED FIRST AND THE STRUCTURAL BACKFILL MATERIAL PLACED ON TOP OF IT. THE CONTRACTOR SHALL USE THIS PLACEMENT ORDER SO THE STRUCTURAL BACKFILL CAN BE COMPACTED TO THE MAXIMUM DENSITY REQUIRED. NO EMBANKMENT MATERIAL SHALL BE WITHIN 2'-0" OF THE CONCRETE STRUCTURE.
3. WHERE THE SITE OF WORK OR CHARACTER OF MATERIAL TO BE EXCAVATED REQUIRES A SLOPE LESS THAN VERTICAL AND THE CONTRACTOR OBTAINS APPROVAL FROM THE ENGINEER TO MAKE A CUT LESS THAN VERTICAL, INSTEAD OF USING COFFERDAMS, THE SLOPE OF THE CUT SHALL NOT BE STEEPER THAN THE STABILITY OF THE MATERIAL PERMITS AS DETERMINED BY THE PROJECT MANAGER. THIS ADDITIONAL EXCAVATION AND BACKFILL, BEYOND A VERTICAL CUT, SHALL BE CONSIDERED INCIDENTAL TO THE COMPLETION OF THE WORK AND NO ADDITIONAL PAYMENT WILL BE MADE THEREFORE.
4. GRADING PLANE IS THE SURFACE TO WHICH PRECISE GRADING IS FINISHED SUCH AS SUBGRADE UNDER THE TEMPLATE SECTION OF A ROAD, ROADWAY SIDE SLOPES, DITCHES ADJACENT TO PIERS, DITCH SLOPES AT WINGWALLS, SUBGRADE UNDER ABUTMENTS AND RETAINING WALLS.
5. EARTHWORK FOR CBC'S TO BE IN ACCORDANCE WITH SECTION 206 OR SECTION 210 OF THE NEW MEXICO DEPARTMENT OF TRANSPORTATION SPECIFICATIONS.
6. STRUCTURE BACKFILL AT APPROACH SLABS SHALL CONFORM TO AASHTO A-1-a.

8-27-08

NO.	DATE	REV.BY	DESCRIPTION
1	3/18/08	YML	CORRECTED THE LOCATION OF 2'-0" INDICATED

REVISIONS (OR CHANGE NOTICES)

NEW MEXICO
DEPARTMENT OF TRANSPORTATION
STANDARD DRAWING

EXCAVATION AND BACKFILL
FOR
BRIDGES, WALLS AND CBC'S

DESIGNED BY ____ DRAWN BY SKL CHECKED BY YML/TM

210-01-1/1 1 of 1

BOX TYPE	CONFIGURATION	DESIGN FILL	DRAWINGS
SINGLE BARREL CBC	10' 0' "A"	"A"	511-60-1/2 511-60-2/2
SINGLE BARREL CBC	30' 25' 20' 15' 10' "E" "D" "C" "B"	"B" "C" "D" "E"	511-61-1/2 511-61-2/2
DOUBLE BARREL CBC	10' 0' "A"	"A"	511-62-1/2 511-62-2/2
DOUBLE BARREL CBC	30' 25' 20' 15' 10' "E" "D" "C" "B"	"B" "C" "D" "E"	511-63-1/2 511-63-2/2
TRIPLE AND QUADRUPLE BARREL CBC	10' 0' "A"	"A"	511-64-1/3 511-64-2/3 511-64-3/3
TRIPLE AND QUADRUPLE BARREL CBC	30' 25' 20' 15' 10' "E" "D" "C" "B"	"B" "C" "D" "E"	511-65-1/3 511-65-2/3 511-65-3/3
CBC HEADWALL/CUTOFF WALL & MISC. DETAILS		"A" "B" "C" "D" "E"	511-66-1/6 511-66-2/6 511-66-3/6 511-66-4/6 511-66-5/6 511-66-6/6
WINGWALL & APRON		"A" "B" "C" "D" "E"	511-67-1/2 511-67-2/2

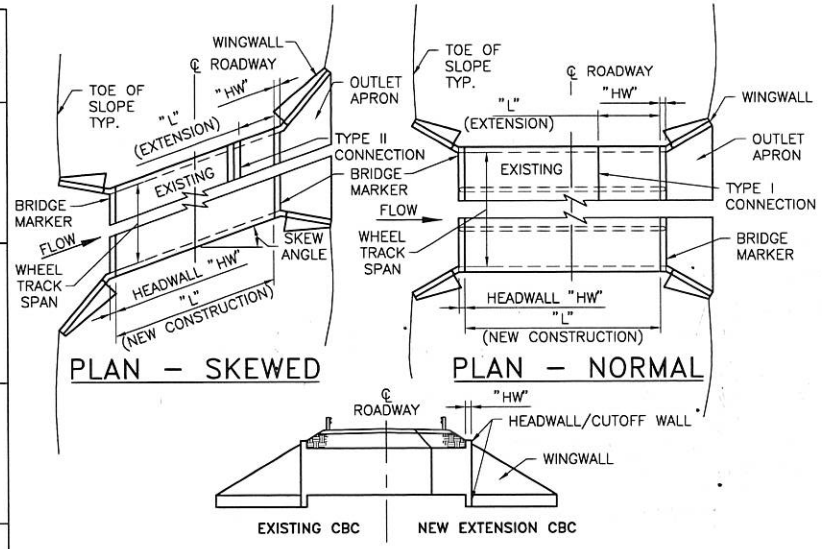

PLAN – SKEWED

PLAN – NORMAL

ELEVATION

NOTE: IF THE WHEEL TRACK SPAN DIMENSION (PARALLEL TO ℄ OF ROADWAY AS SHOWN ABOVE) IS GREATER THAN 20' THE CBC IS CONSIDERED A BRIDGE AND A MAJOR STRUCTURE. FOR CBC EXTENSIONS RE-MARK BRIDGE NUMBER. NEW CBC SHALL BE MARKED AS PER DETAIL ON THIS SHEET. BRIDGE NUMBER SHALL BE OBTAINED BY REQUEST AT THE NMDOT BRIDGE MANAGEMENT SECTION. MARK SHALL BE PLACED AT UPPER LEFT SIDE OF VERTICAL FACE OF HEADWALL, BOTH INLET AND OULET.

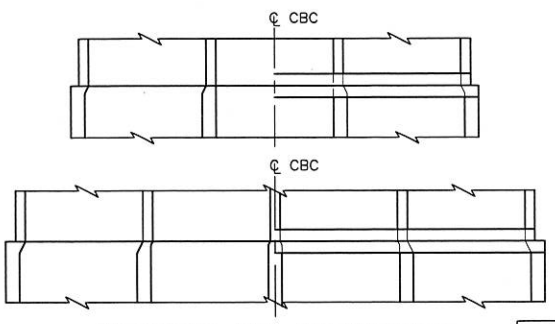

METHOD OF EXTENDING UNEQUAL BOX DIMENSIONS

FOR DETAILS SEE SHEET 511-66-4/6

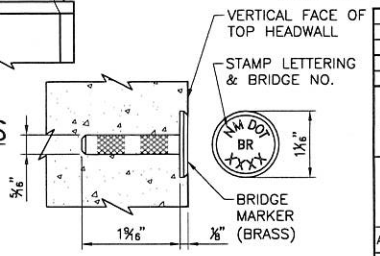

BRIDGE MARK DETAIL

PAYMENT

PAYMENT FOR CBC'S IS BASED ON "LIN. FT." UNIT OF MEASUREMENT FOR THE TOTAL LENGTH OF ALL NEW BARRELS CONSTRUCTED AT THE CENTERLINE OF BARREL. LENGTH OF BARREL SHALL NOT INCLUDE "HW" WHICH SHALL BE PAID FOR SEPARATELY.

PAYMENT FOR HEADWALL/CUTOFF WALL IS BASED ON "EACH" UNIT OF MEASUREMENT FOR EACH NEW BARREL CONSTRUCTED. IN CASE OF TYPE II CONNECTION EACH HEAD/CUTOFF WALL UNIT SHALL BE PAID FOR, I.E. TWO PER BARREL PER CULVERT EXTENSION.

PAYMENT FOR WINGWALL IS BASED ON "SQ. FT." UNIT OF MEASUREMENT BASED ON SOIL SIDE VERTICAL FACE AREA FOR EACH INDIVIDUAL HEIGHT OF INTERIOR BARREL DIMENSION. PAYMENT FOR OUTLET APRON IS BASED ON "SQ. FT." UNIT OF MEASUREMENT BASED ON PLAN AREA OF APRON.

ALTERNATIVELY, A COMPLETE CONCRETE BOX CULVERT MAY BE PAID FOR UNDER CLASS "AA" CONCRETE BY "CU. YD." ITEM 511030 AND GRADE 60 REBAR BY "LBS." ITEM 540060.

REBAR, CONCRETE, FORMING, DEMOLITION, AND ALL OTHER WORK AND MATERIAL REQUIRED FOR A COMPLETE CBC, HEADWALL/CUTOFF WALL, WINGWALL, AND APRON CONSTRUCTION SHALL BE INCLUDED IN THE UNIT COST FOR EACH AND NO FURTHER PAYMENT SHALL BE MADE FOR THESE INCIDENTAL ITEMS.

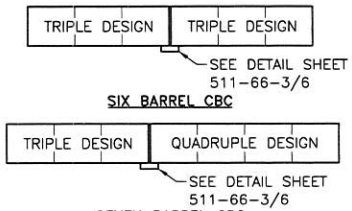

EXAMPLE CONFIGURATIONS OF CBC W/MORE THAN 4 BARRELS

NOTE: USE SAME BARREL CONFIGURATION IF POSSIBLE

NO.	DATE	REV. BY	DESCRIPTION

REVISIONS (OR CHANGE NOTICES)

NEW MEXICO
DEPARTMENT OF TRANSPORTATION
STANDARD DRAWING

CONCRETE BOX CULVERT
INDEX OF SHEETS
EXPLANATION OF USE OF DRAWINGS

APPROVED _____ DESIGN ENGINEER APR 9, 07 DATE

DESIGNED BY TLB DRAWN BY SGL CHECKED BY HDR

511-59-1/2 1 OF 2

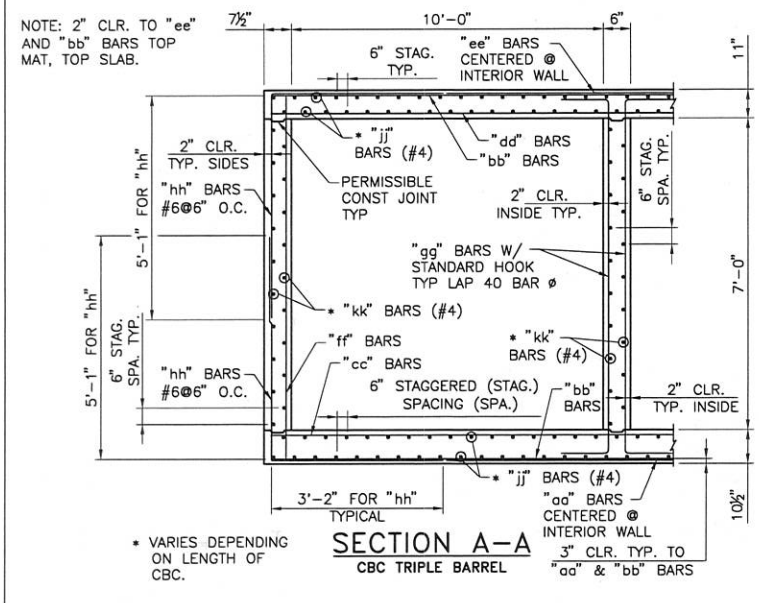

SECTION A–A

CBC TRIPLE BARREL

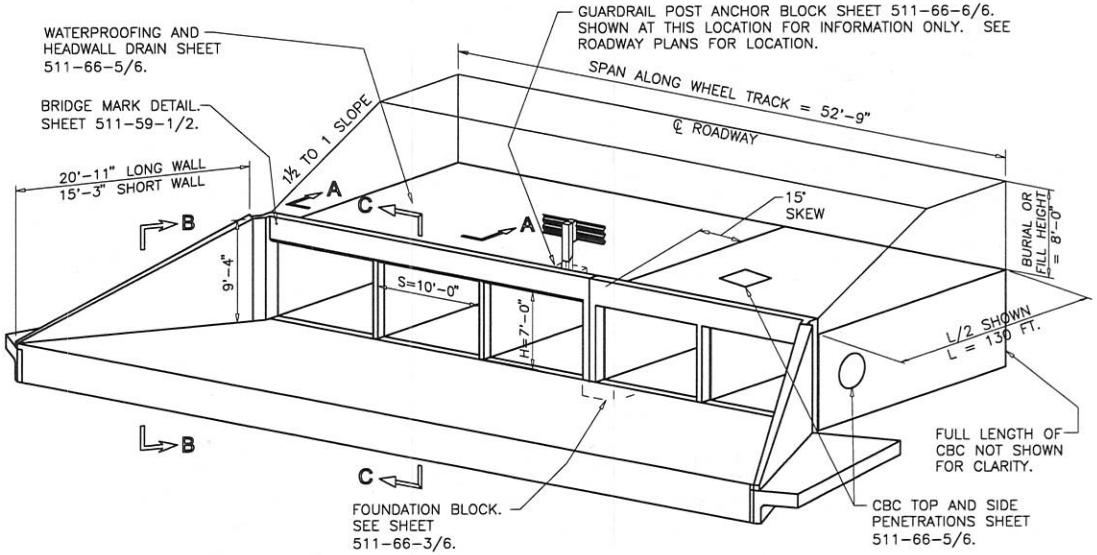

PERSPECTIVE OF 5 BARREL CBC

10' SPAN, 7' HEIGHT, 15° SKEW, 8' FILL HT.

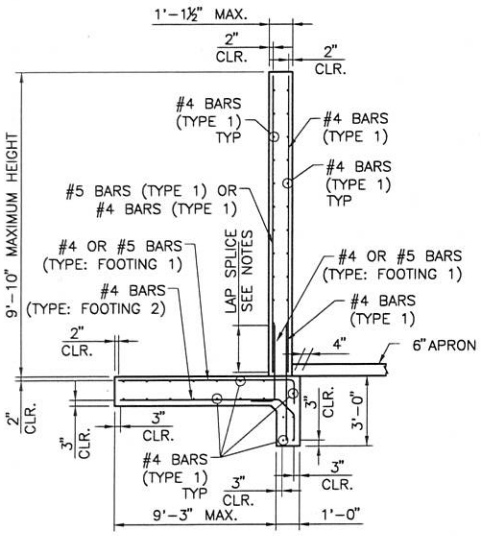

SECTION B–B

WINGWALL & FOOTING

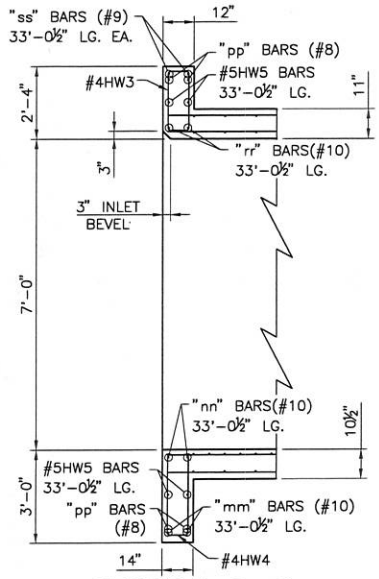

SECTION C–C

HEADWALL/CUTOFF WALL @ TRIPLE BARREL

NOTES

1. THE PURPOSE OF THIS DRAWING IS TO PROVIDE AN EXAMPLE OF USE OF THESE SERIAL CBC DRAWINGS. THIS EXAMPLE IS BASED ON A 5 BARREL, 10'S X 7'H, 15' SKEW, W/ 8' BURIAL DEPTH TO FINISHED ℄ ROADWAY. THIS 8' BURIAL REQUIRES THE DESIGN FILL "A" 0'-10' CATERGORY. INFORMATION PRESENTED ON THIS SHEET IS FROM DRAWINGS 511-62-1/2 & 2/2, 511-64-1/3 & 2/3, 511-66-1/6 THRU 6/6, AND 511-67-1/2 THRU 2/2. PLEASE REFER TO THESE SHEETS TO FOLLOW THE EXAMPLE.
2. PAYMENT FOR THE CBC BARREL CONSTRUCTION IS BY THE LINEAL FOOT OF BARREL. PAYMENT FOR THE FIVE BARREL IS 5*L, UNDER PAY ITEM 511668, CBC DESIGN "A" 10X7, "L" BEING 130FT, FOR A TOTAL LINEAL FOOT PAYMENT UNDER THIS ITEM OF 650 FT. PAYMENT FOR THE WINGWALLS CONSTRUCTION IS BY THE SQUARE FOOT OF SOIL SIDE VERTICAL FACE. UNDER PAY ITEM 511868, CBC WINGWALL BARREL HEIGHT 7FT, QUANTITY EQUALS [(20'-11")X(9'-10")+(15'-3")X(9'-10")]/2, TOTALING 178 SQ. FT. FOR THE OUTLET WINGS. PAYMENT FOR THE HEADWALL/CUTOFF WALL CONSTRUCTION IS UNDER ITEM 511845, CBC HEADWALL/CUTOFF WALL 15 DEG SKEW 10X3 THRU 10X7, UNIT OF EACH PER BARREL, TOTALING 5 EACH FOR THE OUTLET SIDE. OUTLET APRON IS MEASURED BY THE PLAN SQ. FT. UNDER ITEM 511876, CBC OUTLET APRON.
3. NO REBAR DIMENSIONS ARE SHOWN ON SECTION B–B. IT IS THE CONTRACTOR'S RESPONSIBILITY TO DETAIL THE LENGTH OF BARS DUE TO THE CONSTANT CHANGE IN LENGTH DUE TO SLOPE AND FOOTING DIMENSION CHANGE.

REBAR DETAILS

BAR	2 BARREL			3 BARREL		
	LENGTH	SIZE	SPA.	LENGTH	SIZE	SPA.
"aa" BARS	10'-9"	#8	12"	10'-9"	#8	12"
"bb" BARS	21'-5"	#8	12"	31'-11"	#8	12"
"cc" BARS	21'-5"	#6	6"	31'-11"	#6	6"
"dd" BARS	21'-5"	#6	6"	31'-11"	#6	6"
"ee" BARS	10'-9"	#7	12"	10'-9"	#7	12"
"ff" BARS	8'-4"	#6	6"	8'-4"	#6	6"
"gg" BARS	**	#4	12"	**	#4	12"

** SEE NOTES ON SHEETS 511-62-2/2 & 511-64-2/3

NO.	DATE	REV. BY	DESCRIPTION

REVISIONS (OR CHANGE NOTICES)

NEW MEXICO
DEPARTMENT OF TRANSPORTATION
STANDARD DRAWING

CONCRETE BOX CULVERT
EXAMPLE OF USE OF DRAWINGS

APPROVED [signature] DESIGN ENGINEER APR 9, 07 DATE

DESIGNED BY TLB DRAWN BY SGL CHECKED BY HDR

511-59-2/2 2 OF 2

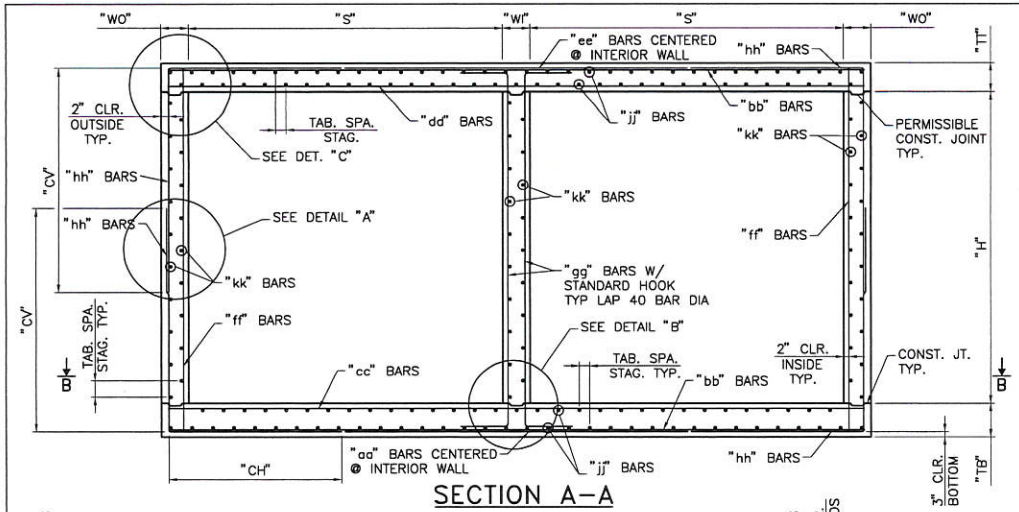

SECTION A–A

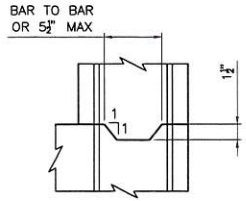

CONSTRUCTION JOINT DETAIL

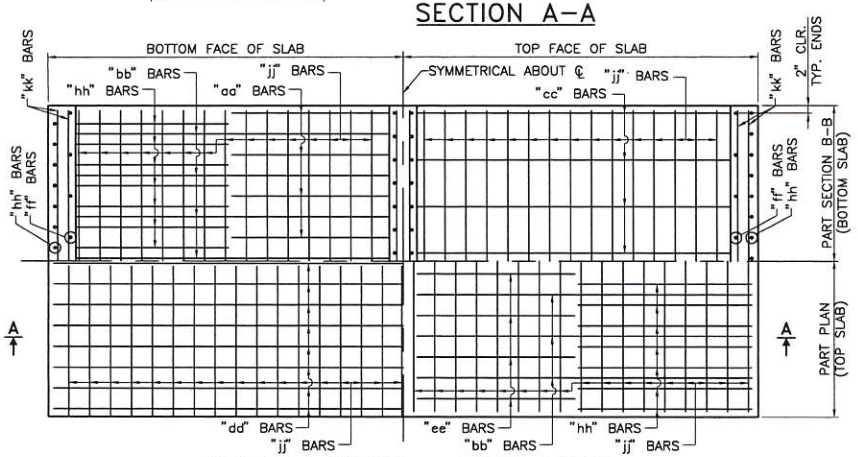

REBAR LAYOUT – PLAN VIEW

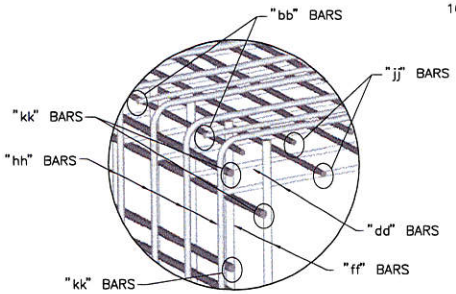

DETAIL "C"

(SIMILAR BOTTOM CORNERS)

GENERAL NOTES

1. ALL MATERIALS AND WORKMANSHIP SHALL CONFORM TO THE NEW MEXICO DEPARTMENT OF TRANSPORTATION SPECIFICATIONS FOR HIGHWAY AND BRIDGE CONSTRUCTION (CURRENT EDITION) WITH APPLICABLE SPECIAL PROVISIONS.
2. ALL CONCRETE SHALL BE CLASS "AA" (4000 psi). CHAMFER ALL EXPOSED EDGES ¾".
3. ALL REINFORCING STEEL TO BE DEFORMED BARS, CONFORMING TO AASHTO M–31, GRADE 60. ALL DIMENSIONS REFER TO THE CENTERLINE OF BAR.
4. "COVER" IS HEIGHT OF FILL FROM TOP OF BOX TO THE TOP OF PAVEMENT. ORIGINAL HEIGHT OF COVER MAY NOT BE EXCEEDED IN THE FUTURE OR WILL REQUIRE REMOVAL AND REPLACEMENT WITH PROPER DESIGN FILL CBC. IN CASE OF COVER EQUAL TO 10', 15', 20', OR 25' USE HIGHER DESIGN FILL IN CASE OF FUTURE AC OVERLAY.
5. "jj" AND "kk" BARS MAY BE SPLICED WHEN NECESSARY BY LAPPING AT LEAST 40 BAR DIAMETERS. NO OTHER SPLICING OF BARS WILL BE PERMITTED. LENGTH OF THESE BARS SHALL EQUAL THE LENGTH OF BARREL "L" PLUS (2 X "HW") MINUS 4" FOR TOTAL NEW CONSTRUCTION, NOT INCLUDING LAP LENGTH. FOR CULVERT EXTENSION, LENGTH OF THESE BARS SHALL BE "L" PLUS "HW" MINUS 2".
6. REINFORCING SHOWN IS FOR PLACEMENT LOCATION ONLY. USE APPROPRIATE SHEETS AND CORRESPONDING TABLES TO DETERMINE THE REINFORCING REQUIREMENTS AND SPACINGS.
7. ALL CONSTRUCTION JOINTS SHALL BE AS PER DETAIL THIS SHEET. CONSTRUCTION JOINTS ARE PERMISSIBLE AND SHALL BE BE LOCATED AT WALL/SLAB HORIZONTAL INTERFACE.
8. DO NOT BACKFILL WALLS UNTIL TOP SLAB HAS REACHED 4000 psi DESIGN STRENGTH.
9. CBC'S SHALL BE CONSTRUCTED TO THE SPAN, HEIGHT, NUMBER OF BARRELS, SKEW, ALIGNMENT, AND FLOWLINE GRADE AS SPECIFIED ON THE PLAN AND PROFILE AND STRUCTURE PLACEMENT SECTIONS.
10. EXCAVATION AND BACKFILL OF CBC'S SHALL BE IN ACCORDANCE WITH STANDARD DRAWING 210–01–1/1.

DESIGN

DESIGNED IN ACCORDANCE WITH AASHTO LRFD BRIDGE DESIGN SPECIFICATIONS, THIRD EDITION.

PAYMENT

PAYMENT FOR CBC'S IS BASED ON "LIN. FT." UNIT OF MEASUREMENT FOR THE TOTAL LENGTH OF ALL NEW BARRELS CONSTRUCTED AT THE CENTERLINE OF BARREL. I.E. SINGLE BARREL SHALL BE 1 X "L" AND TRIPLE BARREL SHALL BE 3 X "L" FOR PAYMENT. LENGTH OF BARREL SHALL NOT INCLUDE "HW" WHICH SHALL BE PAID FOR SEPARATELY. CONCRETE, REBAR, FORMING, AND OTHER WORK AND MATERIAL SHALL BE INCLUDED IN THE LIN. FT. COST FOR THE CBC AND NO FURTHER PAYMENT SHALL BE MADE FOR THESE INCIDENTAL ITEMS.

ALTERNATIVELY, A COMPLETE CONCRETE BOX CULVERT MAY BE PAID FOR UNDER CLASS "AA" CONCRETE BY "CU. YD." ITEM 511030 AND GRADE 60 REBAR BY "LBS." ITEM 540060.

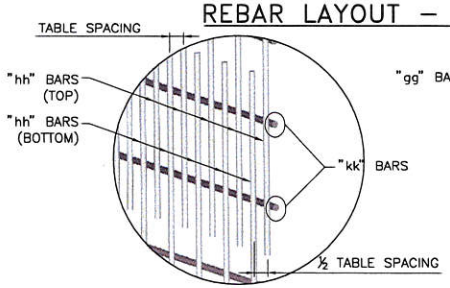

DETAIL "A"

(INSIDE FACE OMITTED FOR CLARITY)

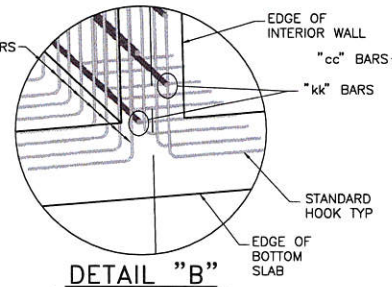

DETAIL "B"

(WALL REINFORCING ONLY)

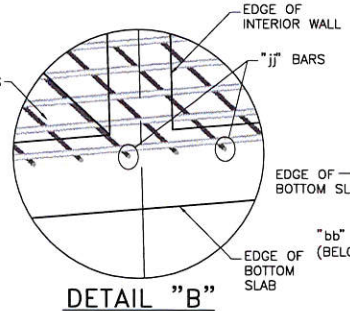

DETAIL "B"

(BOTTOM SLAB – TOP MAT)

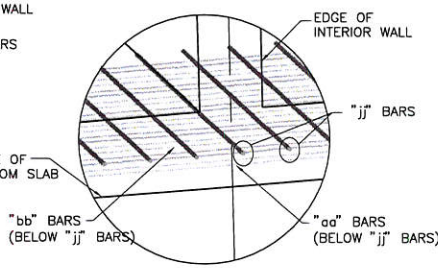

DETAIL "B"

(BOTTOM SLAB – BOTTOM MAT)

NO.	DATE	REV. BY	DESCRIPTION

REVISIONS (OR CHANGE NOTICES)

NEW MEXICO DEPARTMENT OF TRANSPORTATION STANDARD DRAWING

CONCRETE BOX CULVERT DOUBLE OPENING – DESIGN FILL "A" 0–10 FT STRUCTURAL SECTIONS AND REBAR

APPROVED [signature] DESIGN ENGINEER — APR 9, 07 DATE

DESIGNED BY TLB DRAWN BY SGL CHECKED BY HDR

511–62–1/2 — 1 OF 2

DOUBLE OPENING BOX CULVERT STRUCTURE DIMENSIONS						GRADE 60 REINFORCING BAR SCHEDULE (BAR SIZE, SPACING AND LENGTH DIMENSIONS)																											
DIM		0–10 FT BURIAL DESIGN FILL "A"				"aa"		"ee"		"aa" & "ee"		"bb"		"cc"		"dd"		"bb" & "cc", & "dd"	"ff"		"gg"		"ff" & "gg" **	"hh"				"jj"		"kk"	
SPAN "S" INSIDE	HEIGHT "H" INSIDE	TOP SLAB "TT"	BOTTOM SLAB "TB"	WALLS OUTER "WO"	WALLS INTERIOR "WI"	SIZE	SPACING	SIZE	SPACING	LENGTH	NUMBER OF BARS	SIZE	SPACING	SIZE	SPACING	SIZE	SPACING	LENGTH	SIZE	SPACING	SIZE	SPACING	LENGTH	SIZE	SPACING	"CH" LENGTH	"CV" LENGTH	SIZE	STAGGERED SPACING	SIZE	STAGGERED SPACING
4'	2'	7.5"	8.5"	7.5"	6.0"	#4	12"	#5	12"	5'–0"	1	#5	12"	#4	6"	#4	6"	9'–5"	#4	6"	#4	12"	2'–11"	#4	6"	24"	25"	#4	6"	#4	6"
4'	3'	7.5"	8.5"	7.5"	6.0"	#4	12"	#5	12"	5'–0"	1	#5	12"	#4	6"	#4	6"	9'–5"	#4	6"	#4	12"	3'–11"	#4	6"	24"	31"	#4	6"	#4	6"
4'	4'	7.5"	8.5"	7.5"	6.0"	#4	12"	#5	12"	5'–0"	1	#5	12"	#4	6"	#4	6"	9'–5"	#4	6"	#4	12"	4'–11"	#4	6"	24"	37"	#4	6"	#4	6"
6'	2'	8.0"	8.5"	7.5"	6.0"	#5	12"	#7	12"	7'–5"	1	#7	12"	#6	6"	#5	6"	13'–5"	#5	6"	#4	12"	2'–11"	#5	6"	30"	27"	#4	6"	#4	6"
6'	3'	8.0"	8.5"	7.5"	6.0"	#5	12"	#7	12"	7'–5"	1	#7	12"	#6	6"	#5	6"	13'–5"	#5	6"	#4	12"	3'–11"	#5	6"	30"	33"	#4	6"	#4	6"
6'	4'	8.0"	8.5"	7.5"	6.0"	#5	12"	#7	12"	7'–5"	1	#7	12"	#6	6"	#5	6"	13'–5"	#5	6"	#4	12"	4'–11"	#5	6"	30"	39"	#4	6"	#4	6"
6'	5'	8.0"	8.5"	7.5"	6.0"	#5	12"	#7	12"	7'–5"	1	#7	12"	#6	6"	#5	6"	13'–5"	#5	6"	#4	12"	5'–11"	#5	6"	30"	45"	#4	6"	#4	6"
6'	6'	8.0"	8.5"	7.5"	6.0"	#5	12"	#7	12"	7'–5"	1	#7	12"	#6	6"	#5	6"	13'–5"	#5	6"	#4	12"	6'–11"	#5	6"	30"	51"	#4	6"	#4	6"
6'	7'	8.0"	8.5"	7.5"	6.0"	#5	12"	#7	12"	7'–5"	1	#7	12"	#6	6"	#5	6"	13'–5"	#5	6"	#4	12"	7'–11"	#5	6"	30"	57"	#4	6"	#4	6"
8'	4'	9.5"	9.0"	7.5"	6.0"	#7	12"	#7	12"	8'–5"	1	#7	12"	#5	6"	#5	6"	17'–5"	#5	6"	#4	12"	5'–1"	#6	6"	36"	41"	#4	6"	#4	6"
8'	5'	9.5"	9.0"	7.5"	6.0"	#7	12"	#7	12"	8'–5"	1	#7	12"	#5	6"	#5	6"	17'–5"	#5	6"	#4	12"	6'–1"	#6	6"	36"	47"	#4	6"	#4	6"
8'	6'	9.5"	9.0"	7.5"	6.0"	#7	12"	#7	12"	8'–5"	1	#7	12"	#5	6"	#5	6"	17'–5"	#5	6"	#4	12"	7'–1"	#6	6"	36"	53"	#4	6"	#4	6"
8'	7'	9.5"	9.0"	7.5"	6.0"	#7	12"	#7	12"	8'–5"	1	#7	12"	#5	6"	#5	6"	17'–5"	#5	6"	#4	12"	8'–1"	#6	6"	36"	59"	#4	6"	#4	6"
8'	8'	9.5"	9.0"	7.5"	6.0"	#7	12"	#7	12"	8'–5"	1	#7	12"	#5	6"	#5	6"	17'–5"	#5	6"	#4	12"	9'–1"	#6	6"	36"	65"	#4	6"	#4	6"
10'	3'	11.0"	10.5"	7.5"	6.0"	#8	12"	#7	12"	10'–9"	1	#8	12"	#6	6"	#6	6"	21'–5"	#6	6"	#4	12"	4'–4"	#6	6"	38"	37"	#4	6"	#4	6"
10'	4'	11.0"	10.5"	7.5"	6.0"	#8	12"	#7	12"	10'–9"	1	#8	12"	#6	6"	#6	6"	21'–5"	#6	6"	#4	12"	5'–4"	#6	6"	38"	43"	#4	6"	#4	6"
10'	5'	11.0"	10.5"	7.5"	6.0"	#8	12"	#7	12"	10'–9"	1	#8	12"	#6	6"	#6	6"	21'–5"	#6	6"	#4	12"	6'–4"	#6	6"	38"	49"	#4	6"	#4	6"
10'	6'	11.0"	10.5"	7.5"	6.0"	#8	12"	#7	12"	10'–9"	1	#8	12"	#6	6"	#6	6"	21'–5"	#6	6"	#4	12"	7'–4"	#6	6"	38"	55"	#4	6"	#4	6"
10'	7'	11.0"	10.5"	7.5"	6.0"	#8	12"	#7	12"	10'–9"	1	#8	12"	#6	6"	#6	6"	21'–5"	#6	6"	#4	12"	8'–4"	#6	6"	38"	61"	#4	6"	#4	6"
10'	8'	11.0"	10.5"	9.0"	6.0"	#8	12"	#7	12"	10'–10"	1	#8	12"	#6	6"	#6	6"	21'–8"	#6	6"	#4	12"	9'–4"	#7	6"	45"	69"	#4	6"	#4	6"
10'	9'	11.0"	10.5"	9.0"	6.0"	#8	12"	#7	12"	10'–10"	1	#8	12"	#6	6"	#6	6"	21'–8"	#6	6"	#4	12"	10'–4"	#7	6"	45"	75"	#4	6"	#4	6"
10'	10'	11.0"	10.5"	9.0"	6.0"	#8	12"	#7	12"	10'–10"	1	#8	12"	#6	6"	#6	6"	21'–8"	#6	6"	#4	12"	11'–4"	#7	6"	45"	81"	#4	6"	#4	6"
10'	11'	11.0"	10.5"	9.0"	6.0"	#8	12"	#7	12"	10'–10"	1	#8	12"	#6	6"	#6	6"	21'–8"	#6	6"	#4	12"	12'–4"	#7	6"	45"	87"	#4	6"	#4	6"
10'	12'	11.0"	10.5"	9.0"	6.0"	#8	12"	#7	12"	10'–10"	1	#8	12"	#6	6"	#6	6"	21'–8"	#6	6"	#4	12"	13'–4"	#7	6"	45"	93"	#4	6"	#4	6"
12'	6'	12.5"	12.0"	9.0"	6.0"	#8	12"	#8	12"	11'–10"	1	#8	12"	#6	6"	#7	6"	25'–8"	#7	6"	#4	12"	7'–7"	#8	6"	55"	63"	#4	6"	#4	6"
12'	7'	12.5"	12.0"	9.0"	6.0"	#8	12"	#8	12"	11'–10"	1	#8	12"	#6	6"	#7	6"	25'–8"	#7	6"	#4	12"	8'–7"	#8	6"	55"	69"	#4	6"	#4	6"
12'	8'	12.5"	12.0"	9.0"	6.0"	#8	12"	#8	12"	11'–10"	1	#8	12"	#6	6"	#7	6"	25'–8"	#7	6"	#4	12"	9'–7"	#8	6"	55"	75"	#4	6"	#4	6"
12'	9'	12.5"	12.0"	9.0"	6.0"	#8	12"	#8	12"	11'–10"	1	#8	12"	#6	6"	#7	6"	25'–8"	#7	6"	#4	12"	10'–7"	#8	6"	55"	81"	#4	6"	#4	6"
* 12'	10'	12.5"	12.0"	9.0"	6.0"	#8	12"	#8	12"	11'–10"	1	#8	12"	#6	6"	#7	6"	25'–8"	#7	6"	#4	12"	11'–7"	#8	6"	55"	87"	#4	6"	#4	6"
12'	12'	12.5"	12.0"	9.0"	6.0"	#8	12"	#8	12"	11'–10"	1	#8	12"	#6	6"	#7	6"	25'–8"	#7	6"	#4	12"	13'–7"	#8	6"	55"	99"	#4	6"	#4	6"
14'	8'	14.0"	13.0"	11.0"	7.0"	#9	12"	#8	12"	14'–4"	1	#9	12"	#7	6"	#7	6"	30'–1"	#7	6"	#5	12"	9'–10"	#8	6"	60"	76"	#4	6"	#4	6"
14'	9'	14.0"	13.0"	11.0"	7.0"	#9	12"	#8	12"	14'–4"	1	#9	12"	#7	6"	#7	6"	30'–1"	#7	6"	#5	12"	10'–10"	#8	6"	60"	82"	#4	6"	#4	6"
14'	10'	14.0"	13.0"	11.0"	7.0"	#9	12"	#8	12"	14'–4"	1	#9	12"	#7	6"	#7	6"	30'–1"	#7	6"	#5	12"	11'–10"	#8	6"	60"	88"	#4	6"	#4	6"
14'	11'	14.0"	13.0"	11.0"	7.0"	#9	12"	#8	12"	14'–4"	1	#9	12"	#7	6"	#7	6"	30'–1"	#7	6"	#5	12"	12'–10"	#8	6"	60"	94"	#4	6"	#4	6"
14'	12'	14.0"	13.0"	11.0"	7.0"	#9	12"	#8	12"	14'–4"	1	#9	12"	#7	6"	#7	6"	30'–1"	#7	6"	#5	12"	13'–10"	#8	6"	60"	100"	#4	6"	#4	6"
14'	13'	14.0"	13.0"	11.0"	7.0"	#9	12"	#8	12"	14'–4"	1	#9	12"	#7	6"	#7	6"	30'–1"	#7	6"	#5	12"	14'–10"	#8	6"	60"	106"	#4	6"	#4	6"
14'	14'	14.0"	13.0"	11.0"	7.0"	#9	12"	#8	12"	14'–4"	1	#9	12"	#7	6"	#7	6"	30'–1"	#7	6"	#5	12"	15'–10"	#8	6"	60"	112"	#4	6"	#4	6"

FOR EXTENSIONS OF EXISTING CBC'S OF S=5', S=7', AND S=9' SIZE SPANS NOT INCLUDED IN THIS TABLE, USE DIMENSIONS FOR NEXT GREATER SPAN TO BUILD. FOR EXAMPLE: FOR S=5' USE DESIGN DIMENSIONS FROM THE TABLE FOR S=6'. ALSO REDUCE THE S=6' TABLE LENGTH OF BARS "bb", "cc" AND "dd" BY ONE FOOT TO ACCOMMODATE THE SHORTER SPAN. SEE DETAILS ON SHEET 511–66–4/6. ANY OTHER SIZES OF BOX EXTENSIONS NOT COVERED BY THIS MODIFICATION SHALL BE DONE THROUGH SPECIAL DESIGNS INCLUDED IN THE PROJECT PLANS.

** TOTAL LENGTH OF "gg" BARS IS TABLE LENGTH PLUS TWO STANDARD 90° HOOKS AND OPTIONAL 40 BAR ø LAP IF NECESSARY.

* EXAMPLE OF USE OF THIS TABLE:
PROPOSED STRUCTURE – DOUBLE BARREL, 12 FT. SPAN/10 FT. HEIGHT, CBC WITH 6 FT. DEPTH OF COVER.
USE THE FOLLOWING BUILD INFORMATION FROM THE TABLE ABOVE:

DIM		0–10 FT BURIAL DESIGN FILL "A"				"aa"		"ee"		"aa" & "ee"		"bb"		"cc"		"dd"		"bb" & "cc", & "dd"	"ff"		"gg"		"ff" & "gg"	"hh"				"jj"		"kk"	
SPAN "S" INSIDE	HEIGHT "H" INSIDE	TOP SLAB "TT"	BOTTOM SLAB "TB"	WALLS OUTER "WO"	WALLS INTERIOR "WI"	SIZE	SPACING	SIZE	SPACING	LENGTH	NUMBER OF BARS	SIZE	SPACING	SIZE	SPACING	SIZE	SPACING	LENGTH	SIZE	SPACING	SIZE	SPACING	LENGTH	SIZE	SPACING	"CH" LENGTH	"CV" LENGTH	SIZE	STAGGERED SPACING	SIZE	STAGGERED SPACING
12'	10'	12.5"	12.0"	9.0"	6.0"	#8	12"	#8	12"	11'–10"	1	#8	12"	#6	6"	#7	6"	25'–8"	#7	6"	#4	12"	11'–7"	#8	6"	55"	87"	#4	6"	#4	6"

NO.	DATE	REV. BY	DESCRIPTION

REVISIONS (OR CHANGE NOTICES)

NEW MEXICO
DEPARTMENT OF TRANSPORTATION
STANDARD DRAWING

CONCRETE BOX CULVERT DOUBLE OPENING – DESIGN FILL "A" 0–10 FT DIMENSIONS AND REBAR SCHEDULE

APPROVED [signature] DESIGN ENGINEER APR 9, 07 DATE

DESIGNED BY TLB DRAWN BY SGL CHECKED BY HDR

511–62–2/2 2 OF 2

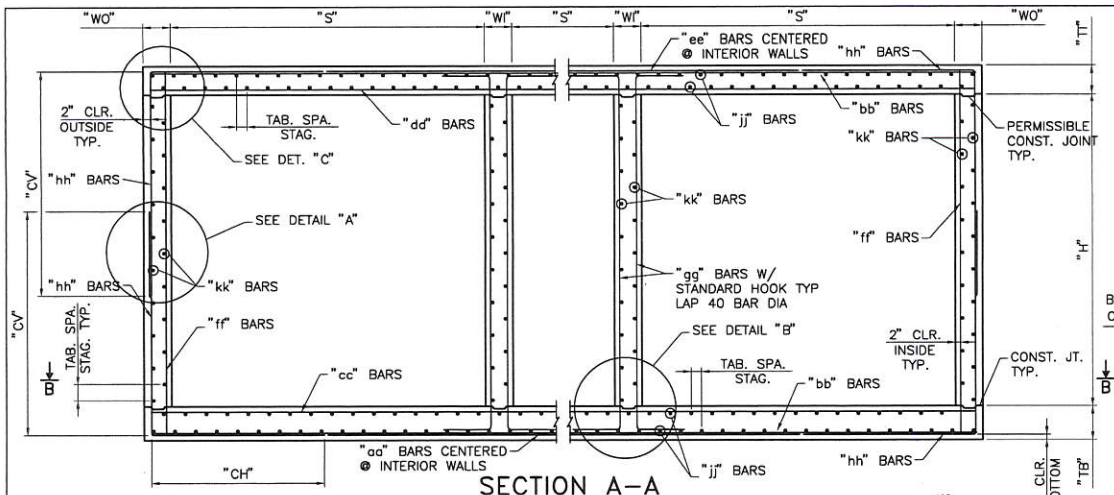

SECTION A–A

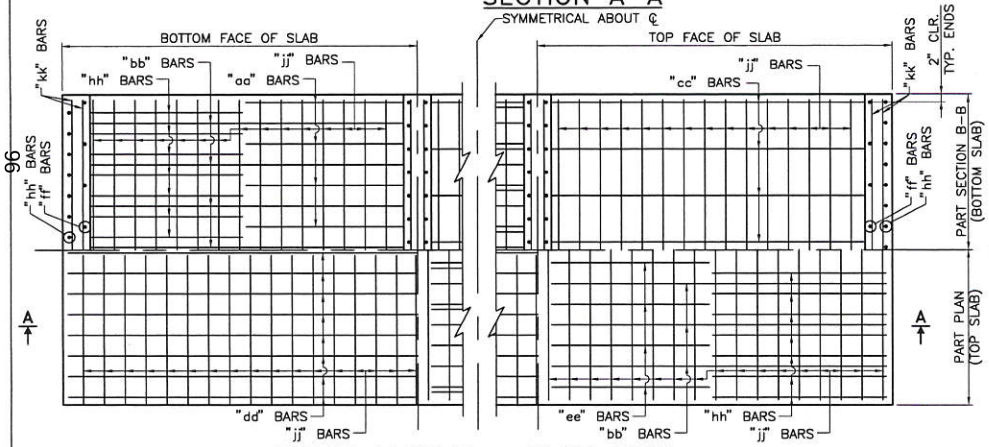

REBAR LAYOUT – PLAN VIEW

BAR SCHEDULES

FOR BAR SCHEDULE SEE SHEET 511–64–2/3 FOR TRIPLE BARREL AND SHEET 511–64–3/3 FOR QUADRUPLE BARRELS

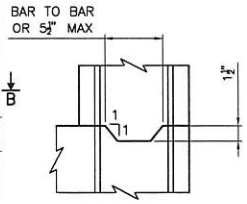

CONST. JOINT DETAIL

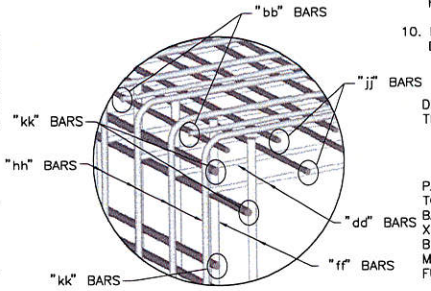

DETAIL "C"

(SIMILAR BOTTOM CORNERS)

GENERAL NOTES

1. ALL MATERIALS AND WORKMANSHIP SHALL CONFORM TO THE NEW MEXICO DEPARTMENT OF TRANSPORTATION SPECIFICATIONS FOR HIGHWAY AND BRIDGE CONSTRUCTION (CURRENT EDITION) WITH APPLICABLE SPECIAL PROVISIONS.
2. ALL CONCRETE SHALL BE CLASS "AA" (4000 psi). CHAMFER ALL EXPOSED EDGES ¾".
3. ALL REINFORCING STEEL TO BE DEFORMED BARS, CONFORMING TO AASHTO M–31, GRADE 60. ALL DIMENSIONS REFER TO THE CENTERLINE OF BAR.
4. "COVER" IS HEIGHT OF FILL FROM TOP OF BOX TO THE TOP OF PAVEMENT. ORIGINAL HEIGHT OF COVER MAY NOT BE EXCEEDED IN THE FUTURE OR WILL REQUIRE REMOVAL AND REPLACEMENT WITH PROPER DESIGN FILL CBC. IN CASE OF COVER EQUAL TO 10', 15', 20', OR 25' USE HIGHER DESIGN FILL IN CASE OF FUTURE AC OVERLAY.
5. "jj" AND "kk" BARS MAY BE SPLICED WHEN NECESSARY BY LAPPING AT LEAST 40 BAR DIAMETERS. NO OTHER SPLICING OF BARS WILL BE PERMITTED. LENGTH OF THESE BARS SHALL EQUAL THE LENGTH OF BARREL "L" PLUS (2 X "HW") MINUS 4" FOR TOTAL NEW CONSTRUCTION, NOT INCLUDING LAP LENGTH. FOR CULVERT EXTENSION, LENGTH OF THESE BARS SHALL BE "L" PLUS "HW" MINUS 2".
6. REINFORCING SHOWN IS FOR PLACEMENT LOCATION ONLY. USE APPROPRIATE SHEETS AND CORRESPONDING TABLES TO DETERMINE THE REINFORCING REQUIREMENTS AND SPACINGS.
7. ALL CONSTRUCTION JOINTS SHALL BE AS PER DETAIL THIS SHEET. CONSTRUCTION JOINTS ARE PERMISSIBLE AND SHALL BE BE LOCATED AT WALL/SLAB HORIZONTAL INTERFACE.
8. DO NOT BACKFILL WALLS UNTIL TOP SLAB HAS REACHED 4000 psi DESIGN STRENGTH.
9. CBC'S SHALL BE CONSTRUCTED TO THE SPAN, HEIGHT, NUMBER OF BARRELS, SKEW, ALIGNMENT, AND FLOWLINE GRADE AS SPECIFIED ON THE PLAN AND PROFILE AND STRUCTURE PLACEMENT SECTIONS.
10. EXCAVATION AND BACKFILL OF CBC'S SHALL BE IN ACCORDANCE WITH STANDARD DRAWING 210–01–1/1.

DESIGN

DESIGNED IN ACCORDANCE WITH AASHTO LRFD BRIDGE DESIGN SPECIFICATIONS, THIRD EDITION.

PAYMENT

PAYMENT FOR CBC'S IS BASED ON "LIN. FT." UNIT OF MEASUREMENT FOR THE TOTAL LENGTH OF ALL NEW BARRELS CONSTRUCTED AT THE CENTERLINE OF BARREL. I.E. SINGLE BARREL SHALL BE 1 X "L" AND TRIPLE BARREL SHALL BE 3 X "L" FOR PAYMENT. LENGTH OF BARREL SHALL NOT INCLUDE "HW" WHICH SHALL BE PAID FOR SEPARATELY. CONCRETE, REBAR, FORMING, AND OTHER WORK AND MATERIAL SHALL BE INCLUDED IN THE LIN. FT. COST FOR THE CBC AND NO FURTHER PAYMENT SHALL BE MADE FOR THESE INCIDENTAL ITEMS.

ALTERNATIVELY, A COMPLETE CONCRETE BOX CULVERT MAY BE PAID FOR UNDER CLASS "AA" CONCRETE BY "CU. YD." ITEM 511030 AND GRADE 60 REBAR BY "LBS." ITEM 540060.

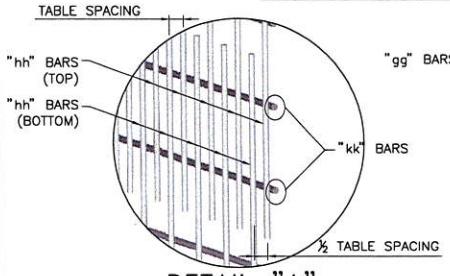

DETAIL "A"

(INSIDE FACE OMITTED FOR CLARITY)

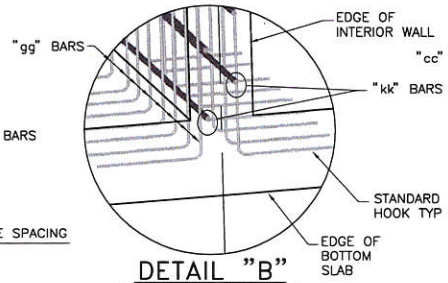

DETAIL "B"

(WALL REINFORCING ONLY)

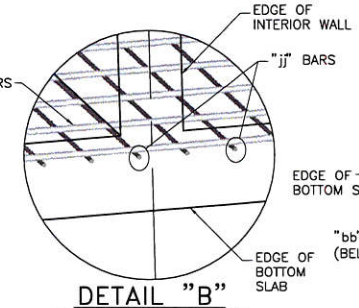

DETAIL "B"

(BOTTOM SLAB – TOP MAT)

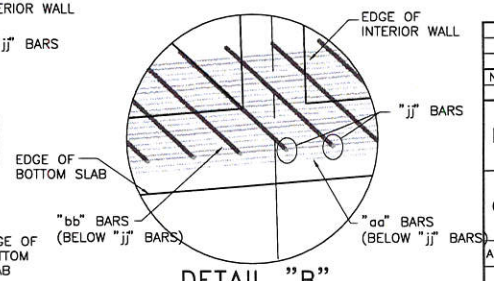

DETAIL "B"

(BOTTOM SLAB – BOTTOM MAT)

NO.	DATE	REV. BY	DESCRIPTION

REVISIONS (OR CHANGE NOTICES)

NEW MEXICO
DEPARTMENT OF TRANSPORTATION
STANDARD DRAWING

CBC TRIPLE AND QUADRUPLE OPENING – DESIGN FILL "A" 0–10 FT. STRUCTURAL SECTIONS AND REBAR

APPROVED _____ DESIGN ENGINEER — DATE APR 9, 07

DESIGNED BY TLB DRAWN BY SGL CHECKED BY HDR

511–64–1/3 1 OF 3

TRIPLE OPENING BOX CULVERT STRUCTURE DIMENSIONS						GRADE 60 REINFORCING BAR SCHEDULE (BAR SIZE, SPACING AND LENGTH DIMENSIONS)																											
DIM		0–10 FT BURIAL DESIGN FILL "A"				"aa"		"ee"		"aa" & "ee"		"bb"		"cc"		"dd"		"bb", "cc" & "dd"	"ff"		"gg"		"ff" & "gg" **	"hh"				"jj"		"kk"	
SPAN "S" INSIDE	HEIGHT "H" INSIDE	TOP SLAB "TT"	BOTTOM SLAB "TB"	WALLS OUTER "WO"	WALLS INTERIOR "WI"	SIZE	SPACING	SIZE	SPACING	LENGTH	NUMBER OF BARS	SIZE	SPACING	SIZE	SPACING	SIZE	SPACING	LENGTH	SIZE	SPACING	SIZE	SPACING	LENGTH	SIZE	SPACING	"CH" LENGTH	"CV" LENGTH	SIZE	STAGGERED SPACING	SIZE	STAGGERED SPACING
4'	2'	7.5"	8.5"	7.5"	6.0"	#4	12"	#5	12"	5'–0"	2	#5	12"	#4	6"	#4	6"	13'–11"	#4	6"	#4	12"	2'–11"	#4	6"	24"	25"	#4	6"	#4	6"
4'	3'	7.5"	8.5"	7.5"	6.0"	#4	12"	#5	12"	5'–0"	2	#5	12"	#4	6"	#4	6"	13'–11"	#4	6"	#4	12"	3'–11"	#4	6"	24"	31"	#4	6"	#4	6"
4'	4'	7.5"	8.5"	7.5"	6.0"	#4	12"	#5	12"	5'–0"	2	#5	12"	#4	6"	#4	6"	13'–11"	#4	6"	#4	12"	4'–11"	#4	6"	24"	37"	#4	6"	#4	6"
6'	2'	8.0"	8.5"	7.5"	6.0"	#5	12"	#7	12"	7'–5"	2	#7	12"	#6	6"	#5	6"	19'–11"	#5	6"	#4	12"	2'–11"	#5	6"	30"	27"	#4	6"	#4	6"
6'	3'	8.0"	8.5"	7.5"	6.0"	#5	12"	#7	12"	7'–5"	2	#7	12"	#6	6"	#5	6"	19'–11"	#5	6"	#4	12"	3'–11"	#5	6"	30"	33"	#4	6"	#4	6"
6'	4'	8.0"	8.5"	7.5"	6.0"	#5	12"	#7	12"	7'–5"	2	#7	12"	#6	6"	#5	6"	19'–11"	#5	6"	#4	12"	4'–11"	#5	6"	30"	39"	#4	6"	#4	6"
6'	5'	8.0"	8.5"	7.5"	6.0"	#5	12"	#7	12"	7'–5"	2	#7	12"	#6	6"	#5	6"	19'–11"	#5	6"	#4	12"	5'–11"	#5	6"	30"	45"	#4	6"	#4	6"
6'	6'	8.0"	8.5"	7.5"	6.0"	#5	12"	#7	12"	7'–5"	2	#7	12"	#6	6"	#5	6"	19'–11"	#5	6"	#4	12"	6'–11"	#5	6"	30"	51"	#4	6"	#4	6"
6'	7'	8.0"	8.5"	7.5"	6.0"	#5	12"	#7	12"	7'–5"	2	#7	12"	#6	6"	#5	6"	19'–11"	#5	6"	#4	12"	7'–11"	#5	6"	30"	57"	#4	6"	#4	6"
8'	4'	9.5"	9.0"	7.5"	6.0"	#7	12"	#6	12"	8'–5"	2	#7	12"	#5	6"	#5	6"	25'–11"	#5	6"	#4	12"	5'–1"	#6	6"	36"	41"	#4	6"	#4	6"
8'	5'	9.5"	9.0"	7.5"	6.0"	#7	12"	#6	12"	8'–5"	2	#7	12"	#5	6"	#5	6"	25'–11"	#5	6"	#4	12"	6'–1"	#6	6"	36"	47"	#4	6"	#4	6"
8'	6'	9.5"	9.0"	7.5"	6.0"	#7	12"	#6	12"	8'–5"	2	#7	12"	#5	6"	#5	6"	25'–11"	#5	6"	#4	12"	7'–1"	#6	6"	36"	53"	#4	6"	#4	6"
8'	7'	9.5"	9.0"	7.5"	6.0"	#7	12"	#6	12"	8'–5"	2	#7	12"	#5	6"	#5	6"	25'–11"	#5	6"	#4	12"	8'–1"	#6	6"	36"	59"	#4	6"	#4	6"
8'	8'	9.5"	9.0"	7.5"	6.0"	#7	12"	#6	12"	8'–5"	2	#7	12"	#5	6"	#5	6"	25'–11"	#5	6"	#4	12"	9'–1"	#6	6"	36"	65"	#4	6"	#4	6"
10'	3'	11.0"	10.5"	7.5"	6.0"	#8	12"	#7	12"	10'–9"	2	#8	12"	#6	6"	#6	6"	31'–11"	#6	6"	#4	12"	4'–4"	#6	6"	38"	37"	#4	6"	#4	6"
10'	4'	11.0"	10.5"	7.5"	6.0"	#8	12"	#7	12"	10'–9"	2	#8	12"	#6	6"	#6	6"	31'–11"	#6	6"	#4	12"	5'–4"	#6	6"	38"	43"	#4	6"	#4	6"
10'	5'	11.0"	10.5"	7.5"	6.0"	#8	12"	#7	12"	10'–9"	2	#8	12"	#6	6"	#6	6"	31'–11"	#6	6"	#4	12"	6'–4"	#6	6"	38"	49"	#4	6"	#4	6"
10'	6'	11.0"	10.5"	7.5"	6.0"	#8	12"	#7	12"	10'–9"	2	#8	12"	#6	6"	#6	6"	31'–11"	#6	6"	#4	12"	7'–4"	#6	6"	38"	55"	#4	6"	#4	6"
* 10'	7'	11.0"	10.5"	7.5"	6.0"	#8	12"	#7	12"	10'–9"	2	#8	12"	#6	6"	#6	6"	31'–11"	#6	6"	#4	12"	8'–4"	#6	6"	38"	61"	#4	6"	#4	6"
10'	8'	11.0"	10.5"	9.0"	6.0"	#8	12"	#7	12"	10'–10"	2	#8	12"	#6	6"	#6	6"	32'–2"	#6	6"	#4	12"	9'–4"	#7	6"	45"	69"	#4	6"	#4	6"
10'	9'	11.0"	10.5"	9.0"	6.0"	#8	12"	#7	12"	10'–10"	2	#8	12"	#6	6"	#6	6"	32'–2"	#6	6"	#4	12"	10'–4"	#7	6"	45"	75"	#4	6"	#4	6"
10'	10'	11.0"	10.5"	9.0"	6.0"	#8	12"	#7	12"	10'–10"	2	#8	12"	#6	6"	#6	6"	32'–2"	#6	6"	#4	12"	11'–4"	#7	6"	45"	81"	#4	6"	#4	6"
10'	11'	11.0"	10.5"	9.0"	6.0"	#8	12"	#7	12"	10'–10"	2	#8	12"	#6	6"	#6	6"	32'–2"	#6	6"	#4	12"	12'–4"	#7	6"	45"	87"	#4	6"	#4	6"
10'	12'	11.0"	10.5"	9.0"	6.0"	#8	12"	#7	12"	10'–10"	2	#8	12"	#6	6"	#6	6"	32'–2"	#6	6"	#4	12"	13'–4"	#7	6"	45"	93"	#4	6"	#4	6"
12'	6'	12.5"	12.0"	9.0"	6.0"	#8	12"	#8	12"	11'–10"	2	#8	12"	#6	6"	#7	6"	38'–2"	#7	6"	#4	12"	7'–7"	#8	6"	55"	63"	#4	6"	#4	6"
12'	7'	12.5"	12.0"	9.0"	6.0"	#8	12"	#8	12"	11'–10"	2	#8	12"	#6	6"	#7	6"	38'–2"	#7	6"	#4	12"	8'–7"	#8	6"	55"	69"	#4	6"	#4	6"
12'	8'	12.5"	12.0"	9.0"	6.0"	#8	12"	#8	12"	11'–10"	2	#8	12"	#6	6"	#7	6"	38'–2"	#7	6"	#4	12"	9'–7"	#8	6"	55"	75"	#4	6"	#4	6"
12'	9'	12.5"	12.0"	9.0"	6.0"	#8	12"	#8	12"	11'–10"	2	#8	12"	#6	6"	#7	6"	38'–2"	#7	6"	#4	12"	10'–7"	#8	6"	55"	81"	#4	6"	#4	6"
12'	10'	12.5"	12.0"	9.0"	6.0"	#8	12"	#8	12"	11'–10"	2	#8	12"	#6	6"	#7	6"	38'–2"	#7	6"	#4	12"	11'–7"	#8	6"	55"	87"	#4	6"	#4	6"
12'	12'	12.5"	12.0"	9.0"	6.0"	#8	12"	#8	12"	11'–10"	2	#8	12"	#6	6"	#7	6"	38'–2"	#7	6"	#4	12"	13'–7"	#8	6"	55"	99"	#4	6"	#4	6"
14'	8'	14.0"	13.5"	11.0"	7.0"	#9	12"	#8	12"	14'–4"	2	#9	12"	#7	6"	#7	6"	44'–8"	#7	6"	#4	12"	9'–10"	#8	6"	60"	76"	#4	6"	#4	6"
14'	9'	14.0"	13.5"	11.0"	7.0"	#9	12"	#8	12"	14'–4"	2	#9	12"	#7	6"	#7	6"	44'–8"	#7	6"	#4	12"	10'–10"	#8	6"	60"	82"	#4	6"	#4	6"
14'	10'	14.0"	13.5"	11.0"	7.0"	#9	12"	#8	12"	14'–4"	2	#9	12"	#7	6"	#7	6"	44'–8"	#7	6"	#4	12"	11'–10"	#8	6"	60"	88"	#4	6"	#4	6"
14'	11'	14.0"	13.5"	11.0"	7.0"	#9	12"	#8	12"	14'–4"	2	#9	12"	#7	6"	#7	6"	44'–8"	#7	6"	#4	12"	12'–10"	#8	6"	60"	94"	#4	6"	#4	6"
14'	12'	14.0"	13.5"	11.0"	7.0"	#9	12"	#8	12"	14'–4"	2	#9	12"	#7	6"	#7	6"	44'–8"	#7	6"	#4	12"	13'–10"	#8	6"	60"	100"	#4	6"	#4	6"
14'	13'	14.0"	13.5"	11.0"	7.0"	#9	12"	#8	12"	14'–4"	2	#9	12"	#7	6"	#7	6"	44'–8"	#7	6"	#4	12"	14'–10"	#8	6"	60"	106"	#4	6"	#4	6"
14'	14'	14.0"	13.5"	11.0"	7.0"	#9	12"	#8	12"	14'–4"	2	#9	12"	#7	6"	#7	6"	44'–8"	#7	6"	#4	12"	15'–10"	#8	6"	60"	112"	#4	6"	#4	6"

FOR EXTENSIONS OF EXISTING CBC'S OF S=5', S=7', AND S=9' SIZE SPANS NOT INCLUDED IN THIS TABLE, USE DIMENSIONS FOR NEXT GREATER SPAN TO BUILD. FOR EXAMPLE: FOR S=5' USE DESIGN DIMENSIONS FROM THE TABLE FOR S=6'. ALSO REDUCE THE S=6' TABLE LENGTH OF BARS "bb", "cc" AND "dd" BY ONE FOOT TO ACCOMMODATE THE SHORTER SPAN. SEE DETAILS ON SHEET 511–66–4/6. ANY OTHER SIZES OF BOX EXTENSIONS NOT COVERED BY THIS MODIFICATION SHALL BE DONE THROUGH SPECIAL DESIGNS INCLUDED IN THE PROJECT PLANS.

** TOTAL LENGTH OF "gg" BARS IS TABLE LENGTH PLUS TWO STANDARD 90° HOOKS AND OPTIONAL 40 BAR ø LAP IF NECESSARY.

* EXAMPLE OF USE OF THIS TABLE:
PROPOSED STRUCTURE – TRIPLE BARREL, 10 FT. SPAN/7 FT. HEIGHT, CBC WITH 2 FT. DEPTH OF COVER.
USE THE FOLLOWING BUILD INFORMATION FROM THE TABLE ABOVE:

DIM		0–10 FT BURIAL DESIGN FILL "A"				"aa"		"ee"		"aa" & "ee"		"bb"		"cc"		"dd"		"bb", "cc" & "dd"	"ff"		"gg"		"ff" & "gg"	"hh"				"jj"		"kk"	
SPAN "S" INSIDE	HEIGHT "H" INSIDE	TOP SLAB "TT"	BOTTOM SLAB "TB"	WALLS OUTER "WO"	WALLS INTERIOR "WI"	SIZE	SPACING	SIZE	SPACING	LENGTH	NUMBER OF BARS	SIZE	SPACING	SIZE	SPACING	SIZE	SPACING	LENGTH	SIZE	SPACING	SIZE	SPACING	LENGTH	SIZE	SPACING	"CH" LENGTH	"CV" LENGTH	SIZE	STAGGERED SPACING	SIZE	STAGGERED SPACING
10'	7'	11.0"	10.5"	7.5"	6.0"	#8	12"	#7	12"	10'–9"	2	#8	12"	#6	6"	#6	6"	31'–11"	#6	6"	#4	12"	8'–4"	#6	6"	38"	61"	#4	6"	#4	6"

NO.	DATE	REV. BY	DESCRIPTION

REVISIONS (OR CHANGE NOTICES)

NEW MEXICO
DEPARTMENT OF TRANSPORTATION
STANDARD DRAWING

CONCRETE BOX CULVERT TRIPLE OPENING – DESIGN FILL "A" 0–10 FT. DIMENSIONS AND REBAR SCHEDULE

APPROVED [signature] DESIGN ENGINEER — APR 9, 07 DATE

DESIGNED BY TLB DRAWN BY SGL CHECKED BY HDR

511–64–2/3 2 OF 3

QUADRUPLE OPENING BOX CULVERT STRUCTURE DIMENSIONS						GRADE 60 REINFORCING BAR SCHEDULE (BAR SIZE, SPACING AND LENGTH DIMENSIONS)																									
DIM		0-10 FT BURIAL DESIGN FILL "A"				"aa"		"ee"		"aa" & "ee"		"bb"		"cc"		"dd"		"bb", "cc" & "dd"	"ff"		"gg"		"ff" & "gg" **	"hh"				"jj"		"kk"	
SPAN "S" INSIDE	HEIGHT "H" INSIDE	TOP SLAB "TT"	BOTTOM SLAB "TB"	WALLS OUTER "WO"	WALLS INTERIOR "WI"	SIZE	SPACING	SIZE	SPACING	LENGTH	NUMBER OF BARS	SIZE	SPACING	SIZE	SPACING	SIZE	SPACING	LENGTH	SIZE	SPACING	SIZE	SPACING	LENGTH	SIZE	SPACING	"CH" LENGTH	"CV" LENGTH	SIZE	STAGGERED SPACING	SIZE	STAGGERED SPACING
4'	2'	7.5"	8.5"	7.5"	6.0"	#4	12"	#5	12"	5'-0"	3	#5	12"	#4	6"	#4	6"	18'-5"	#4	6"	#4	12"	2'-11"	#4	6"	24"	25"	#4	6"	#4	6"
4'	3'	7.5"	8.5"	7.5"	6.0"	#4	12"	#5	12"	5'-0"	3	#5	12"	#4	6"	#4	6"	18'-5"	#4	6"	#4	12"	3'-11"	#4	6"	24"	31"	#4	6"	#4	6"
4'	4'	7.5"	8.5"	7.5"	6.0"	#4	12"	#5	12"	5'-0"	3	#5	12"	#4	6"	#4	6"	18'-5"	#4	6"	#4	12"	4'-11"	#4	6"	24"	37"	#4	6"	#4	6"
6'	2'	8.0"	8.5"	7.5"	6.0"	#5	12"	#7	12"	7'-5"	3	#7	12"	#6	6"	#5	6"	26'-5"	#5	6"	#4	12"	2'-11"	#5	6"	30"	27"	#4	6"	#4	6"
6'	3'	8.0"	8.5"	7.5"	6.0"	#5	12"	#7	12"	7'-5"	3	#7	12"	#6	6"	#5	6"	26'-5"	#5	6"	#4	12"	3'-11"	#5	6"	30"	33"	#4	6"	#4	6"
6'	4'	8.0"	8.5"	7.5"	6.0"	#5	12"	#7	12"	7'-5"	3	#7	12"	#6	6"	#5	6"	26'-5"	#5	6"	#4	12"	4'-11"	#5	6"	30"	39"	#4	6"	#4	6"
6'	5'	8.0"	8.5"	7.5"	6.0"	#5	12"	#7	12"	7'-5"	3	#7	12"	#6	6"	#5	6"	26'-5"	#5	6"	#4	12"	5'-11"	#5	6"	30"	45"	#4	6"	#4	6"
6'	6'	8.0"	8.5"	7.5"	6.0"	#5	12"	#7	12"	7'-5"	3	#7	12"	#6	6"	#5	6"	26'-5"	#5	6"	#4	12"	6'-11"	#5	6"	30"	51"	#4	6"	#4	6"
6'	7'	8.0"	8.5"	7.5"	6.0"	#5	12"	#7	12"	7'-5"	3	#7	12"	#6	6"	#5	6"	26'-5"	#5	6"	#4	12"	7'-11"	#5	6"	30"	57"	#4	6"	#4	6"
8'	4'	9.5"	9.0"	7.5"	6.0"	#7	12"	#7	12"	8'-5"	3	#7	12"	#5	6"	#5	6"	34'-5"	#5	6"	#4	12"	5'-1"	#6	6"	36"	41"	#4	6"	#4	6"
8'	5'	9.5"	9.0"	7.5"	6.0"	#7	12"	#7	12"	8'-5"	3	#7	12"	#5	6"	#5	6"	34'-5"	#5	6"	#4	12"	6'-1"	#6	6"	36"	47"	#4	6"	#4	6"
8'	6'	9.5"	9.0"	7.5"	6.0"	#7	12"	#7	12"	8'-5"	3	#7	12"	#5	6"	#5	6"	34'-5"	#5	6"	#4	12"	7'-1"	#6	6"	36"	53"	#4	6"	#4	6"
8'	7'	9.5"	9.0"	7.5"	6.0"	#7	12"	#7	12"	8'-5"	3	#7	12"	#5	6"	#5	6"	34'-5"	#5	6"	#4	12"	8'-1"	#6	6"	36"	59"	#4	6"	#4	6"
8'	8'	9.5"	9.0"	7.5"	6.0"	#7	12"	#7	12"	8'-5"	3	#7	12"	#5	6"	#5	6"	34'-5"	#5	6"	#4	12"	9'-1"	#6	6"	36"	65"	#4	6"	#4	6"
10'	3'	11.0"	10.5"	7.5"	6.0"	#8	12"	#7	12"	10'-9"	3	#8	12"	#6	6"	#6	6"	42'-5"	#6	6"	#4	12"	4'-4"	#6	6"	38"	37"	#4	6"	#4	6"
10'	4'	11.0"	10.5"	7.5"	6.0"	#8	12"	#7	12"	10'-9"	3	#8	12"	#6	6"	#6	6"	42'-5"	#6	6"	#4	12"	5'-4"	#6	6"	38"	43"	#4	6"	#4	6"
10'	5'	11.0"	10.5"	7.5"	6.0"	#8	12"	#7	12"	10'-9"	3	#8	12"	#6	6"	#6	6"	42'-5"	#6	6"	#4	12"	6'-4"	#6	6"	38"	49"	#4	6"	#4	6"
10'	6'	11.0"	10.5"	7.5"	6.0"	#8	12"	#7	12"	10'-9"	3	#8	12"	#6	6"	#6	6"	42'-5"	#6	6"	#4	12"	7'-4"	#6	6"	38"	55"	#4	6"	#4	6"
* 10'	7'	11.0"	10.5"	7.5"	6.0"	#8	12"	#7	12"	10'-9"	3	#8	12"	#6	6"	#6	6"	42'-5"	#6	6"	#4	12"	8'-4"	#6	6"	38"	61"	#4	6"	#4	6"
10'	8'	11.0"	10.5"	9.0"	6.0"	#8	12"	#7	12"	10'-10"	3	#8	12"	#6	6"	#6	6"	42'-8"	#6	6"	#4	12"	9'-4"	#7	6"	45"	69"	#4	6"	#4	6"
10'	9'	11.0"	10.5"	9.0"	6.0"	#8	12"	#7	12"	10'-10"	3	#8	12"	#6	6"	#6	6"	42'-8"	#6	6"	#4	12"	10'-4"	#7	6"	45"	75"	#4	6"	#4	6"
10'	10'	11.0"	10.5"	9.0"	6.0"	#8	12"	#7	12"	10'-10"	3	#8	12"	#6	6"	#6	6"	42'-8"	#6	6"	#4	12"	11'-4"	#7	6"	45"	81"	#4	6"	#4	6"
10'	11'	11.0"	10.5"	9.0"	6.0"	#8	12"	#7	12"	10'-10"	3	#8	12"	#6	6"	#6	6"	42'-8"	#6	6"	#4	12"	12'-4"	#7	6"	45"	87"	#4	6"	#4	6"
10'	12'	11.0"	10.5"	9.0"	6.0"	#8	12"	#7	12"	10'-10"	3	#8	12"	#6	6"	#6	6"	42'-8"	#6	6"	#4	12"	13'-4"	#7	6"	45"	93"	#4	6"	#4	6"
12'	6'	12.5"	12.0"	9.0"	6.0"	#8	12"	#8	12"	11'-10"	3	#8	12"	#6	6"	#7	6"	50'-8"	#7	6"	#4	12"	7'-7"	#8	6"	55"	63"	#4	6"	#4	6"
12'	7'	12.5"	12.0"	9.0"	6.0"	#8	12"	#8	12"	11'-10"	3	#8	12"	#6	6"	#7	6"	50'-8"	#7	6"	#4	12"	8'-7"	#8	6"	55"	69"	#4	6"	#4	6"
12'	8'	12.5"	12.0"	9.0"	6.0"	#8	12"	#8	12"	11'-10"	3	#8	12"	#6	6"	#7	6"	50'-8"	#7	6"	#4	12"	9'-7"	#8	6"	55"	75"	#4	6"	#4	6"
12'	9'	12.5"	12.0"	9.0"	6.0"	#8	12"	#8	12"	11'-10"	3	#8	12"	#6	6"	#7	6"	50'-8"	#7	6"	#4	12"	10'-7"	#8	6"	55"	81"	#4	6"	#4	6"
12'	10'	12.5"	12.0"	9.0"	6.0"	#8	12"	#8	12"	11'-10"	3	#8	12"	#6	6"	#7	6"	50'-8"	#7	6"	#4	12"	11'-7"	#8	6"	55"	87"	#4	6"	#4	6"
12'	12'	12.5"	12.0"	9.0"	6.0"	#8	12"	#8	12"	11'-10"	3	#8	12"	#6	6"	#7	6"	50'-8"	#7	6"	#4	12"	13'-7"	#8	6"	55"	99"	#4	6"	#4	6"
14'	8'	14.0"	13.0"	11.0"	7.0"	#9	12"	#8	12"	14'-4"	3	#9	12"	#7	6"	#7	6"	59'-3"	#7	6"	#4	12"	9'-10"	#8	6"	60"	76"	#4	6"	#4	6"
14'	9'	14.0"	13.0"	11.0"	7.0"	#9	12"	#8	12"	14'-4"	3	#9	12"	#7	6"	#7	6"	59'-3"	#7	6"	#4	12"	10'-10"	#8	6"	60"	82"	#4	6"	#4	6"
14'	10'	14.0"	13.0"	11.0"	7.0"	#9	12"	#8	12"	14'-4"	3	#9	12"	#7	6"	#7	6"	59'-3"	#7	6"	#4	12"	11'-10"	#8	6"	60"	88"	#4	6"	#4	6"
14'	11'	14.0"	13.0"	11.0"	7.0"	#9	12"	#8	12"	14'-4"	3	#9	12"	#7	6"	#7	6"	59'-3"	#7	6"	#4	12"	12'-10"	#8	6"	60"	94"	#4	6"	#4	6"
14'	12'	14.0"	13.0"	11.0"	7.0"	#9	12"	#8	12"	14'-4"	3	#9	12"	#7	6"	#7	6"	59'-3"	#7	6"	#4	12"	13'-10"	#8	6"	60"	100"	#4	6"	#4	6"
14'	13'	14.0"	13.0"	11.0"	7.0"	#9	12"	#8	12"	14'-4"	3	#9	12"	#7	6"	#7	6"	59'-3"	#7	6"	#4	12"	14'-10"	#8	6"	60"	106"	#4	6"	#4	6"
14'	14'	14.0"	13.0"	11.0"	7.0"	#9	12"	#8	12"	14'-4"	3	#9	12"	#7	6"	#7	6"	59'-3"	#7	6"	#4	12"	15'-10"	#8	6"	60"	112"	#4	6"	#4	6"

FOR EXTENSIONS OF EXISTING CBC'S OF S=5', S=7', AND S=9' SIZE SPANS NOT INCLUDED IN THIS TABLE, USE DIMENSIONS FOR NEXT GREATER SPAN TO BUILD. FOR EXAMPLE: FOR S=5' USE DESIGN DIMENSIONS FROM THE TABLE FOR S=6'. ALSO REDUCE THE S=6' TABLE LENGTH OF BARS "bb", "cc" AND "dd" BY ONE FOOT TO ACCOMMODATE THE SHORTER SPAN. SEE DETAILS ON SHEET 511-66-4/6. ANY OTHER SIZES OF BOX EXTENSIONS NOT COVERED BY THIS MODIFICATION SHALL BE DONE THROUGH SPECIAL DESIGNS INCLUDED IN THE PROJECT PLANS.

** TOTAL LENGTH OF "gg" BARS IS TABLE LENGTH PLUS TWO STANDARD 90° HOOKS AND OPTIONAL 40 BAR ø LAP IF NECESSARY.

* EXAMPLE OF USE OF THIS TABLE:
PROPOSED STRUCTURE – QUADRUPLE BARREL, 10 FT. SPAN/7 FT. HEIGHT, CBC WITH 2 FT. DEPTH OF COVER.
USE THE FOLLOWING BUILD INFORMATION FROM THE TABLE ABOVE:

DIM		0-10 FT BURIAL DESIGN FILL "A"				"aa"		"ee"		"aa" & "ee"		"bb"		"cc"		"dd"		"bb", "cc" & "dd"	"ff"		"gg"		"ff" & "gg"	"hh"				"jj"		"kk"	
SPAN "S" INSIDE	HEIGHT "H" INSIDE	TOP SLAB "TT"	BOTTOM SLAB "TB"	WALLS OUTER "WO"	WALLS INTERIOR "WI"	SIZE	SPACING	SIZE	SPACING	LENGTH	NUMBER OF BARS	SIZE	SPACING	SIZE	SPACING	SIZE	SPACING	LENGTH	SIZE	SPACING	SIZE	SPACING	LENGTH	SIZE	SPACING	"CH" LENGTH	"CV" LENGTH	SIZE	STAGGERED SPACING	SIZE	STAGGERED SPACING
10'	7'	11.0"	10.5"	7.5"	6.0"	#8	12"	#7	12"	10'-9"	3	#8	12"	#6	6"	#6	6"	42'-5"	#6	6"	#4	12"	8'-4"	#6	6"	38"	61"	#4	6"	#4	6"

NO.	DATE	REV. BY	DESCRIPTION

REVISIONS (OR CHANGE NOTICES)

NEW MEXICO
DEPARTMENT OF TRANSPORTATION
STANDARD DRAWING

CONCRETE BOX CULVERT QUADRUPLE OPENING – DESIGN FILL "A" 0-10 FT. DIMENSIONS AND REBAR SCHEDULE

APPROVED [signature] DESIGN ENGINEER — APR 9, 07 DATE

DESIGNED BY TLB DRAWN BY SGL CHECKED BY HDR

511-64-3/3 3 OF 3

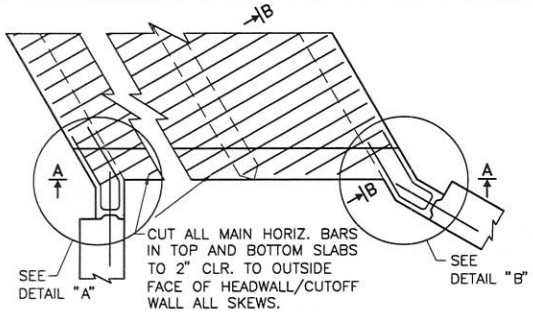

PLAN
(SKEWED)
SIMILAR FOR SINGLE BARREL
(NOT TO BE USED FOR SKEWS OVER 45°)

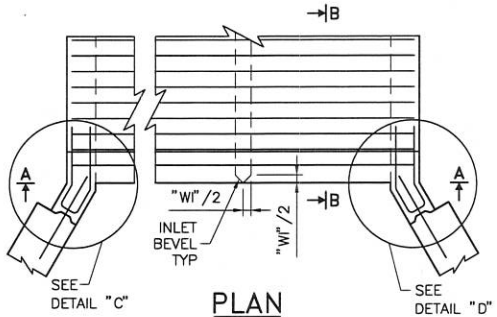

PLAN
(NORMAL)
SIMILAR FOR SINGLE BARREL

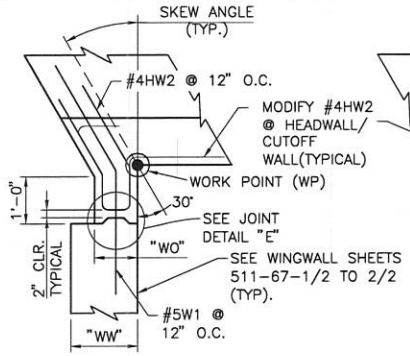

DETAIL "A"
(SKEWED)

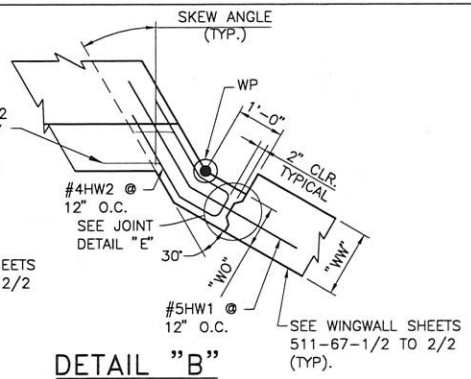

DETAIL "B"
(SKEWED)

NOTE: SEE SHEET 511-66-2/6 FOR BAR SIZES, NUMBER OF BARS, AND BAR LENGTH FORMULAS.

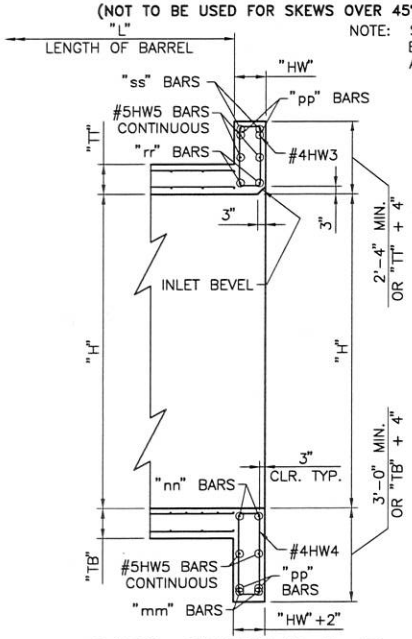

PART SECTION B-B

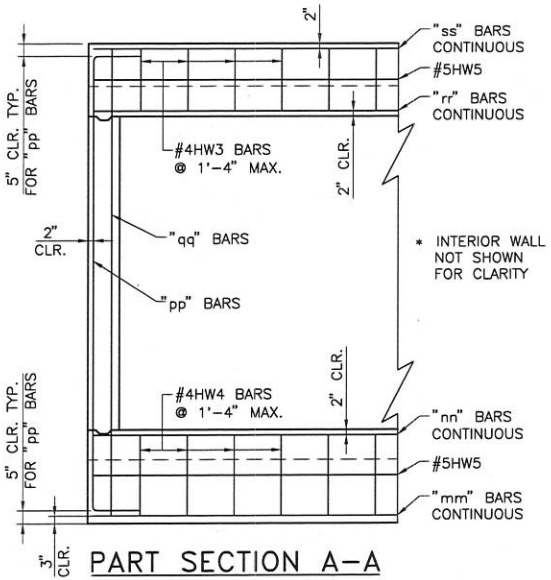

PART SECTION A-A

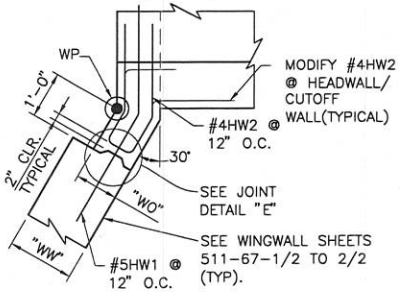

DETAIL "C"
(NORMAL)

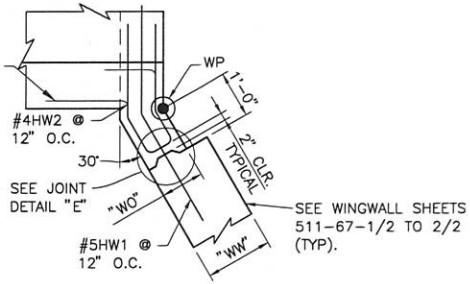

DETAIL "D"
(NORMAL)

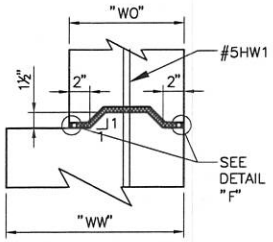

JOINT DETAIL "E"

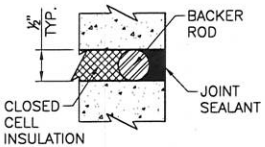

DETAIL "F"

NOTE: DETAILS "A", "B", "C, & "D" EXTEND FULL HEIGHT FROM TOP OF PARAPET TO BOTTOM OF CUTOFF WALL. THESE EXTENSIONS SHALL BE CAST INTEGRALLY WITH HEADWALL/CUTOFF WALL (NO CONSTRUCTION JOINT). ELEVATION AT EXTENSION SHALL BE EQUAL TO PARAPET.

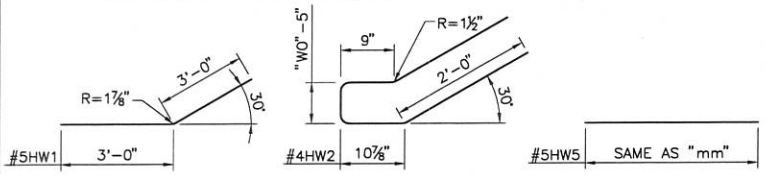

REINFORCING BARS

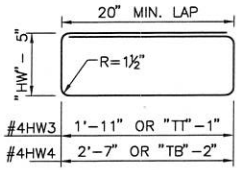

PAYMENT

PAYMENT FOR HEADWALL/CUTOFF WALL IS BASED ON "EACH" UNIT OF MEASUREMENT FOR EACH NEW BARREL CONSTRUCTED. IN CASE OF TYPE II CONNECTION EACH HEADWALL/CUTOFF WALL UNIT SHALL BE PAID FOR, I.E. TWO PER CULVERT EXTENSION.

ALTERNATIVELY, A COMPLETE CONCRETE BOX CULVERT MAY BE PAID FOR UNDER CLASS "AA" CONCRETE BY "CU.YD." ITEM 511030 AND GRADE 60 REBAR BY "LBS." ITEM 540060.

NO.	DATE	REV. BY	DESCRIPTION

REVISIONS (OR CHANGE NOTICES)

NEW MEXICO
DEPARTMENT OF TRANSPORTATION
STANDARD DRAWING

CBC HEAD/CUTOFF WALLS – ALL
DESIGN FILLS–0° 15° 30° 45° SKEWS
STRUCTURAL SECTIONS AND REBAR

APPROVED DESIGN ENGINEER DATE APR 9, 07

DESIGNED BY TLB DRAWN BY SGL CHECKED BY HDR

511-66-1/6 1 OF 6

BOX CULVERT NOMINAL DIMENSIONS		HEADWALL AND CUTOFF WALL DIMENSION & GRADE 60 REINFORCING BAR SCHEDULE (BAR SIZE AND NUMBER OF BARS REQUIRED)											
		0 DEGREE SKEW											
			"mm"		"nn"		"pp"		"qq"		"rr"		"ss"	
SPAN "S" INSIDE	HEIGHT "H" INSIDE	WIDTH HEAD WALL "HW"	SIZE	NUMBER OF BARS	SIZE	NUMBER OF BARS	SIZE	NUMBER OF BARS	SIZE	NUMBER OF BARS	SIZE	NUMBER OF BARS	SIZE	NUMBER OF BARS
4'	2'	12"	#7	2	#7	2	#7	2	#4	2	#7	2	#7	2
4'	3'	12"	#7	2	#7	2	#7	2	#4	2	#7	2	#7	2
4'	4'	12"	#7	2	#7	2	#7	2	#4	2	#7	2	#7	2
6'	2'	12"	#7	2	#7	2	#7	2	#4	2	#7	2	#7	2
6'	3'	12"	#7	2	#7	2	#7	2	#4	2	#7	2	#7	2
6'	4'	12"	#7	2	#7	2	#7	2	#4	2	#7	2	#7	2
6'	5'	12"	#7	2	#7	2	#7	2	#4	2	#7	2	#7	2
6'	6'	12"	#7	2	#7	2	#7	2	#4	2	#7	2	#7	2
6'	7'	12"	#7	2	#7	2	#7	2	#4	2	#7	2	#7	2
8'	4'	12"	#7	2	#7	2	#7	2	#4	2	#7	2	#7	2
8'	5'	12"	#7	2	#7	2	#7	2	#4	2	#7	2	#7	2
8'	6'	12"	#7	2	#7	2	#7	2	#4	2	#7	2	#7	2
8'	7'	12"	#7	2	#7	2	#7	2	#4	2	#7	2	#7	2
8'	8'	12"	#7	2	#7	2	#7	2	#4	2	#7	2	#7	2
10'	3'	12"	#7	2	#7	2	#7	2	#4	2	#7	2	#7	2
10'	4'	12"	#7	2	#7	2	#7	2	#4	2	#7	2	#7	2
10'	5'	12"	#7	2	#7	2	#7	2	#4	2	#7	2	#7	2
10'	6'	12"	#7	2	#7	2	#7	2	#4	2	#7	2	#7	2
10'	7'	12"	#7	2	#7	2	#7	2	#4	2	#7	2	#7	2
10'	8'	12"	#7	2	#7	2	#7	2	#4	2	#7	2	#7	2
10'	9'	12"	#7	2	#7	2	#7	2	#4	2	#7	2	#7	2
10'	10'	12"	#7	2	#7	2	#7	2	#4	2	#7	2	#7	2
10'	11'	12"	#7	2	#7	2	#7	2	#4	2	#7	2	#7	2
10'	12'	12"	#7	2	#7	2	#7	2	#4	2	#7	2	#7	2
12'	6'	12"	#7	2	#7	2	#7	2	#4	2	#7	2	#7	2
12'	7'	12"	#7	2	#7	2	#7	2	#4	2	#7	2	#7	2
12'	8'	12"	#7	2	#7	2	#7	2	#4	2	#7	2	#7	2
12'	9'	12"	#7	2	#7	2	#7	2	#4	2	#7	2	#7	2
* 12'	10'	12"	#7	2	#7	2	#7	2	#4	2	#7	2	#7	2
12'	12'	12"	#7	2	#7	2	#7	2	#4	2	#7	2	#7	2
14'	8'	12"	#7	2	#7	2	#7	2	#4	2	#7	2	#7	2
14'	9'	12"	#7	2	#7	2	#7	2	#4	2	#7	2	#7	2
14'	10'	12"	#7	2	#7	2	#7	2	#4	2	#7	2	#7	2
14'	11'	12"	#7	2	#7	2	#7	2	#4	2	#7	2	#7	2
14'	12'	12"	#7	2	#7	2	#7	2	#4	2	#7	2	#7	2
14'	13'	12"	#7	2	#7	2	#7	2	#4	2	#7	2	#7	2
14'	14'	12"	#7	2	#7	2	#7	2	#4	2	#7	2	#7	2

BOX CULVERT NOMINAL DIMENSIONS		HEADWALL AND CUTOFF WALL DIMENSION & GRADE 60 REINFORCING BAR SCHEDULE (BAR SIZE AND NUMBER OF BARS REQUIRED)											
		15 DEGREE SKEW											
			"mm"		"nn"		"pp"		"qq"		"rr"		"ss"	
SPAN "S" INSIDE	HEIGHT "H" INSIDE	WIDTH HEAD WALL "HW"	SIZE	NUMBER OF BARS	SIZE	NUMBER OF BARS	SIZE	NUMBER OF BARS	SIZE	NUMBER OF BARS	SIZE	NUMBER OF BARS	SIZE	NUMBER OF BARS
4'	2'	12"	#7	2	#7	2	#7	2	#4	2	#7	2	#7	2
4'	3'	12"	#7	2	#7	2	#7	2	#4	2	#7	2	#7	2
4'	4'	12"	#7	2	#7	2	#7	2	#4	2	#7	2	#7	2
6'	2'	12"	#7	2	#7	2	#7	2	#4	2	#7	2	#7	2
6'	3'	12"	#7	2	#7	2	#7	2	#4	2	#7	2	#7	2
6'	4'	12"	#7	2	#7	2	#7	2	#4	2	#7	2	#7	2
6'	5'	12"	#7	2	#7	2	#7	2	#4	2	#7	2	#7	2
6'	6'	12"	#7	2	#7	2	#7	2	#4	2	#7	2	#7	2
6'	7'	12"	#7	2	#7	2	#7	2	#4	2	#7	2	#7	2
8'	4'	12"	#9	2	#9	2	#7	2	#4	2	#8	2	#8	2
8'	5'	12"	#9	2	#9	2	#7	2	#4	2	#8	2	#8	2
8'	6'	12"	#9	2	#9	2	#7	2	#4	2	#8	2	#8	2
8'	7'	12"	#9	2	#9	2	#7	2	#4	2	#8	2	#8	2
8'	8'	12"	#9	2	#9	2	#7	2	#4	2	#8	2	#8	2
10'	3'	12"	#10	2	#10	2	#8	2	#5	2	#10	2	#9	2
10'	4'	12"	#10	2	#10	2	#8	2	#5	2	#10	2	#9	2
10'	5'	12"	#10	2	#10	2	#8	2	#5	2	#10	2	#9	2
10'	6'	12"	#10	2	#10	2	#8	2	#5	2	#10	2	#9	2
10'	7'	12"	#10	2	#10	2	#8	2	#5	2	#10	2	#9	2
10'	8'	12"	#10	2	#10	2	#8	2	#5	2	#10	2	#9	2
10'	9'	12"	#10	2	#10	2	#8	2	#5	2	#10	2	#9	2
10'	10'	12"	#10	2	#10	2	#8	2	#5	2	#10	2	#9	2
10'	11'	12"	#10	2	#10	2	#8	2	#5	2	#10	2	#9	2
10'	12'	12"	#10	2	#10	2	#8	2	#5	2	#10	2	#9	2
12'	6'	12"	#11	3	#10	3	#11	2	#6	2	#11	3	#10	3
12'	7'	12"	#11	3	#10	3	#11	2	#6	2	#11	3	#10	3
12'	8'	12"	#11	3	#10	3	#11	2	#6	2	#11	3	#10	3
12'	9'	12"	#11	3	#10	3	#11	2	#6	2	#11	3	#10	3
* 12'	10'	12"	#11	3	#10	3	#11	2	#6	2	#11	3	#10	3
12'	12'	12"	#11	3	#10	3	#11	2	#6	2	#11	3	#10	3
14'	8'	12"	#11	4	#11	4	#10	3	#8	3	#11	4	#10	4
14'	9'	12"	#11	4	#11	4	#10	3	#8	3	#11	4	#10	4
14'	10'	12"	#11	4	#11	4	#10	3	#8	3	#11	4	#10	4
14'	11'	12"	#11	4	#11	4	#10	3	#8	3	#11	4	#10	4
14'	12'	12"	#11	4	#11	4	#10	3	#8	3	#11	4	#10	4
14'	13'	12"	#11	4	#11	4	#10	3	#8	3	#11	4	#10	4
14'	14'	12"	#11	4	#11	4	#10	3	#8	3	#11	4	#10	4

BOX CULVERT NOMINAL DIMENSIONS		HEADWALL AND CUTOFF WALL DIMENSION & GRADE 60 REINFORCING BAR SCHEDULE (BAR SIZE AND NUMBER OF BARS REQUIRED)											
		30 DEGREE SKEW											
			"mm"		"nn"		"pp"		"qq"		"rr"		"ss"	
SPAN "S" INSIDE	HEIGHT "H" INSIDE	WIDTH HEAD WALL "HW"	SIZE	NUMBER OF BARS	SIZE	NUMBER OF BARS	SIZE	NUMBER OF BARS	SIZE	NUMBER OF BARS	SIZE	NUMBER OF BARS	SIZE	NUMBER OF BARS
4'	2'	12"	#7	2	#7	2	#7	2	#4	2	#7	2	#7	2
4'	3'	12"	#7	2	#7	2	#7	2	#4	2	#7	2	#7	2
4'	4'	12"	#7	2	#7	2	#7	2	#4	2	#7	2	#7	2
6'	2'	12"	#8	2	#8	2	#7	2	#4	2	#8	2	#7	2
6'	3'	12"	#8	2	#8	2	#7	2	#4	2	#8	2	#7	2
6'	4'	12"	#8	2	#8	2	#7	2	#4	2	#8	2	#7	2
6'	5'	12"	#8	2	#8	2	#7	2	#4	2	#8	2	#7	2
6'	6'	12"	#8	2	#8	2	#7	2	#4	2	#8	2	#7	2
6'	7'	12"	#8	2	#8	2	#7	2	#4	2	#8	2	#7	2
8'	4'	12"	#10	2	#10	2	#7	2	#4	2	#10	2	#9	2
8'	5'	12"	#10	2	#10	2	#7	2	#4	2	#10	2	#9	2
8'	6'	12"	#10	2	#10	2	#7	2	#4	2	#10	2	#9	2
8'	7'	12"	#10	2	#10	2	#7	2	#4	2	#10	2	#9	2
8'	8'	12"	#10	2	#10	2	#7	2	#4	2	#10	2	#9	2
10'	3'	14"	#11	3	#11	3	#9	2	#6	2	#11	3	#11	3
10'	4'	14"	#11	3	#11	3	#9	2	#6	2	#11	3	#11	3
10'	5'	14"	#11	3	#11	3	#9	2	#6	2	#11	3	#11	3
10'	6'	14"	#11	3	#11	3	#9	2	#6	2	#11	3	#11	3
10'	7'	14"	#11	3	#11	3	#9	2	#6	2	#11	3	#11	3
10'	8'	14"	#11	3	#11	3	#9	2	#6	2	#11	3	#11	3
10'	9'	14"	#11	3	#11	3	#9	2	#6	2	#11	3	#11	3
10'	10'	14"	#11	3	#11	3	#9	2	#6	2	#11	3	#11	3
10'	11'	14"	#11	3	#11	3	#9	2	#6	2	#11	3	#11	3
10'	12'	14"	#11	3	#11	3	#9	2	#6	2	#11	3	#11	3
12'	6'	24"	#11	3	#11	3	#11	2	#6	2	#11	3	#9	3
12'	7'	24"	#11	3	#11	3	#11	2	#6	2	#11	3	#9	3
12'	8'	24"	#11	3	#11	3	#11	2	#6	2	#11	3	#9	3
12'	9'	24"	#11	3	#11	3	#11	2	#6	2	#11	3	#9	3
* 12'	10'	24"	#11	3	#11	3	#11	2	#6	2	#11	3	#9	3
12'	12'	24"	#11	3	#11	3	#11	2	#6	2	#11	3	#9	3
14'	8'	36"	#11	9	#9	8	#6	8	#11	9	#11	9	#11	9
14'	9'	36"	#11	9	#11	9	#9	8	#6	8	#11	9	#11	9
14'	10'	36"	#11	9	#11	9	#9	8	#6	8	#11	9	#11	9
14'	11'	36"	#11	9	#11	9	#9	8	#6	8	#11	9	#11	9
14'	12'	36"	#11	9	#11	9	#9	8	#6	8	#11	9	#11	9
14'	13'	36"	#11	9	#11	9	#9	8	#6	8	#11	9	#11	9
14'	14'	36"	#11	9	#11	9	#9	8	#6	8	#11	9	#11	9

BOX CULVERT NOMINAL DIMENSIONS		HEADWALL AND CUTOFF WALL DIMENSION & GRADE 60 REINFORCING BAR SCHEDULE (BAR SIZE AND NUMBER OF BARS REQUIRED)											
		45 DEGREE SKEW											
			"mm"		"nn"		"pp"		"qq"		"rr"		"ss"	
SPAN "S" INSIDE	HEIGHT "H" INSIDE	WIDTH HEAD WALL "HW"	SIZE	NUMBER OF BARS	SIZE	NUMBER OF BARS	SIZE	NUMBER OF BARS	SIZE	NUMBER OF BARS	SIZE	NUMBER OF BARS	SIZE	NUMBER OF BARS
4'	2'	12"	#7	2	#7	2	#7	2	#4	2	#7	2	#7	2
4'	3'	12"	#7	2	#7	2	#7	2	#4	2	#7	2	#7	2
4'	4'	12"	#7	2	#7	2	#7	2	#4	2	#7	2	#7	2
6'	2'	12"	#10	2	#10	2	#7	2	#4	2	#9	2	#8	2
6'	3'	12"	#10	2	#10	2	#7	2	#4	2	#9	2	#8	2
6'	4'	12"	#10	2	#10	2	#7	2	#4	2	#9	2	#8	2
6'	5'	12"	#10	2	#10	2	#7	2	#4	2	#9	2	#8	2
6'	6'	12"	#10	2	#10	2	#7	2	#4	2	#9	2	#8	2
6'	7'	12"	#10	2	#10	2	#7	2	#4	2	#9	2	#8	2
8'	4'	14"	#11	3	#11	3	#9	2	#5	2	#11	3	#11	3
8'	5'	14"	#11	3	#11	3	#9	2	#5	2	#11	3	#11	3
8'	6'	14"	#11	3	#11	3	#9	2	#5	2	#11	3	#11	3
8'	7'	14"	#11	3	#11	3	#9	2	#5	2	#11	3	#11	3
8'	8'	14"	#11	3	#11	3	#9	2	#5	2	#11	3	#11	3
10'	3'	24"	#11	3	#11	3	#11	2	#5	2	#11	3	#11	3
10'	4'	24"	#11	3	#11	3	#11	2	#6	2	#11	3	#11	3
10'	5'	24"	#11	3	#11	3	#11	2	#6	2	#11	3	#11	3
10'	6'	24"	#11	3	#11	3	#11	2	#6	2	#11	3	#11	3
10'	7'	24"	#11	3	#11	3	#11	2	#6	2	#11	3	#11	3
10'	8'	24"	#11	3	#11	3	#11	2	#6	2	#11	3	#11	3
10'	9'	24"	#11	3	#11	3	#11	2	#6	2	#11	3	#11	3
10'	10'	24"	#11	3	#11	3	#11	2	#6	2	#11	3	#11	3
10'	11'	24"	#11	3	#11	3	#11	2	#6	2	#11	3	#11	3
10'	12'	24"	#11	3	#11	3	#11	2	#6	2	#11	3	#11	3
12'	6'	48"	#11	12	#11	12	#8	11	#5	11	#11	12	#11	12
12'	7'	48"	#11	12	#11	12	#8	11	#5	11	#11	12	#11	12
12'	8'	48"	#11	12	#11	12	#8	11	#5	11	#11	12	#11	12
12'	9'	48"	#11	12	#11	12	#8	11	#5	11	#11	12	#11	12
* 12'	10'	48"	#11	12	#11	12	#8	11	#5	11	#11	12	#11	12
12'	12'	48"	#11	12	#11	12	#8	11	#5	11	#11	12	#11	12
14'	8'	48"	#11	12	#11	12	#8	11	#5	11	#11	12	#11	12
14'	9'	48"	#11	12	#11	12	#8	11	#5	11	#11	12	#11	12
14'	10'	48"	#11	12	#11	12	#8	11	#5	11	#11	12	#11	12
14'	11'	48"	#11	12	#11	12	#8	11	#5	11	#11	12	#11	12
14'	12'	48"	#11	12	#11	12	#8	11	#5	11	#11	12	#11	12
14'	13'	48"	#11	12	#11	12	#8	11	#5	11	#11	12	#11	12
14'	14'	48"	#11	12	#11	12	#8	11	#5	11	#11	12	#11	12

* EXAMPLE OF USE OF THIS TABLE:
PROPOSED STRUCTURE – DOUBLE BARREL, 12 FT. SPAN/10 FT. HEIGHT, CBC WITH 30° SKEW.
USE THE FOLLOWING BUILD INFORMATION FROM THE TABLE ABOVE:

BOX CULVERT NOMINAL DIMENSIONS		HEADWALL AND CUTOFF WALL DIMENSION GRADE 60 REINFORCING BAR SCHEDULE (BAR SIZE AND NUMBER OF BARS REQUIRED)											
		30 DEGREE SKEW											
			"mm"		"nn"		"pp"		"qq"		"rr"		"ss"	
SPAN "S" INSIDE	HEIGHT "H" INSIDE	WIDTH HEAD WALL "HW"	SIZE	NUMBER OF BARS	SIZE	NUMBER OF BARS	SIZE	NUMBER OF BARS	SIZE	NUMBER OF BARS	SIZE	NUMBER OF BARS	SIZE	NUMBER OF BARS
12'	10'	24"	#11	3	#11	3	#11	2	#6	2	#11	3	#9	3

LENGTH OF BARS: THE LENGTH OF "mm", "nn", "rr", "ss", & #5HW5 SHALL BE DETERMINED BY:

LENGTH = [[[("WO"*2)+("S"*N)+["WI"*(N−1)]]/COS(SKEW ANGLE)] −4"
(ROUND DOWN TO NEAREST ½")

THESE BARS SHALL BE FURNISHED IN FULL LENGTHS CALCULATED OR BE MECHANICALLY COUPLED BY DEVICES LISTED ON THE NMDOT APPROVED PRODUCTS LIST.

N = NUMBER OF BARRELS (1, 2, 3, OR 4)

"qq" BAR LENGTH = "H" + 59"

"pp" BAR = ["H"+(5'−4" MIN. OR ("TT"+"TB"+8") IF LARGER)]−10"+ 2*STANDARD HOOK LENGTH

FOR EXTENSIONS OF EXISTING CBC'S OF S=5', S=7', AND S=9' SIZE SPANS NOT INCLUDED IN THIS TABLE, USE DIMENSIONS, BAR SIZES, AND NUMBER OF BARS FOR NEXT GREATER SPAN TO BUILD. FOR EXAMPLE, FOR S=5' USE DIMENSIONS AND BAR DETAILS FROM THE TABLE FOR S=6'. USE S=5' IN FORMULAS TO DETERMINE LENGTH OF BARS "mm", "nn", "ss", "rr", AND #5HW5. ANY OTHER SIZE OF BOX EXTENSIONS NOT COVERED BY THIS MODIFICATION SHALL BE DONE THROUGH SPECIAL DESIGNS INCLUDED IN THE PROJECT PLANS.

NOTE:
THIS TABLE IS FOR USE WITH ONE TO FOUR BARRELS. FOR FIVE OR MORE BARRELS USE COMBINATIONS OF ONE TO FOUR BARRELS REPEATING THIS DESIGN.

NO.	DATE	REV. BY	DESCRIPTION

REVISIONS (OR CHANGE NOTICES)

NEW MEXICO
DEPARTMENT OF TRANSPORTATION
STANDARD DRAWING

CONCRETE BOX CULVERT HEADWALL
ALL DESIGN FILLS–0° 15° 30° 45°
SKEWS DIMS AND REBAR SCHEDULE

APPROVED _____ DESIGN ENGINEER APR 9, 07 DATE

DESIGNED BY TLB DRAWN BY SGL CHECKED BY HDR

511-66-2/6 2 OF 6

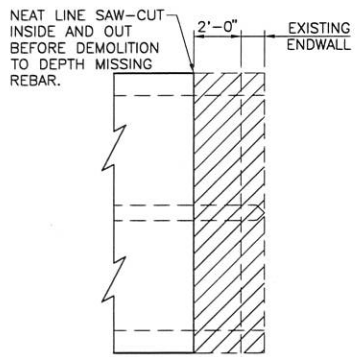

(NO SKEW)

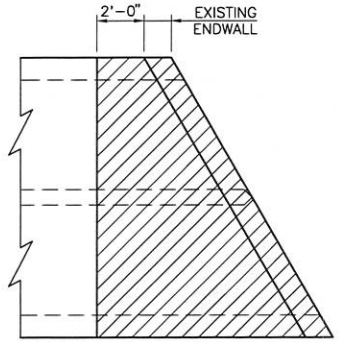

(SKEW)

DEMOLITION

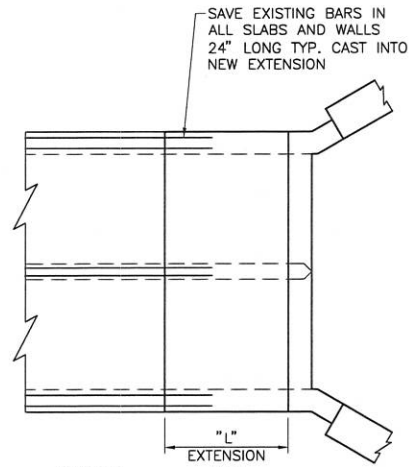

PLAN

TYPE I CONNECTION

SIMILAR FOR SINGLE AND MULTIPLE BARRELS

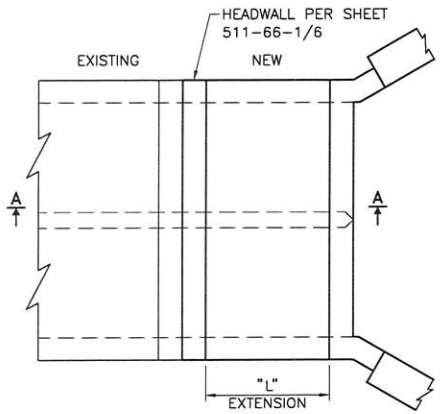

PLAN

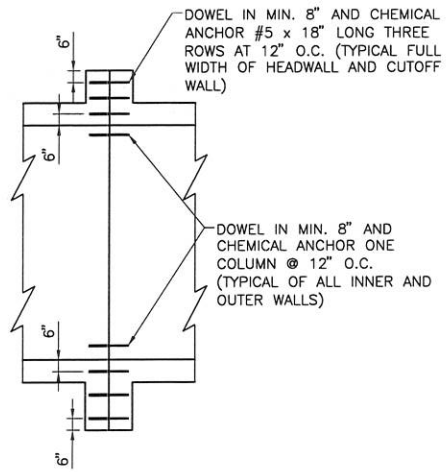

SECTION A-A

TYPE II CONNECTION

SIMILAR FOR SINGLE AND MULTIPLE BARRELS

NOTES

1. FOR CBC EXTENSIONS TYPE I CONNECTION IS RECOMMENDED. TYPE II CONNECTION SHALL BE USED WHERE EXISTING HEADWALL IS IN GOOD CONDITION AND DEMOLITION WOULD CAUSE TOO MANY PROJECT COMPLICATIONS. ROADWAY PLANS SHALL SPECIFY CONNECTION TYPE.
2. DEMOLITION, SAWCUTTING, REMOVAL AND DISPOSAL OF CULVERT END IN TYPE I EXTENSION SHALL BE CONSIDERED INCIDENTAL TO CONSTRUCTION OF CBC.
3. ALL DRILLING, CHEMICAL ANCHORING, REBAR DOWELS AND RELATED WORK SHALL BE CONSIDERED INCIDENTAL TO TYPE II EXTENSION.

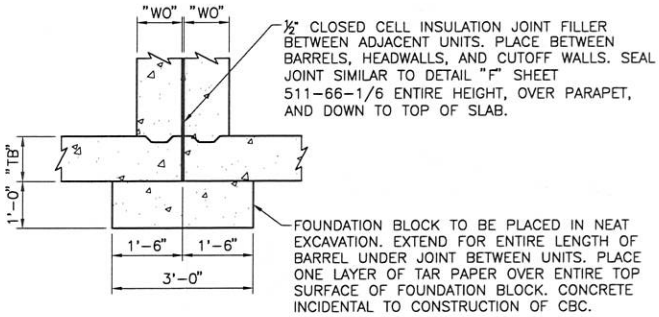

JOINT DETAIL FOR MULTIPLE UNIT BOXES

NO.	DATE	REV. BY	DESCRIPTION

REVISIONS (OR CHANGE NOTICES)

NEW MEXICO
DEPARTMENT OF TRANSPORTATION
STANDARD DRAWING

CONCRETE BOX CULVERT EXT. ALL DESIGN FILLS-0° 15° 30° 45° SKEWS
CBC EXTENSIONS/MULTI-BARREL CBC

APPROVED [signature] DESIGN ENGINEER APR 9, 07 DATE

DESIGNED BY TLB DRAWN BY SGL CHECKED BY HDR

511-66-3/6 3 OF 6

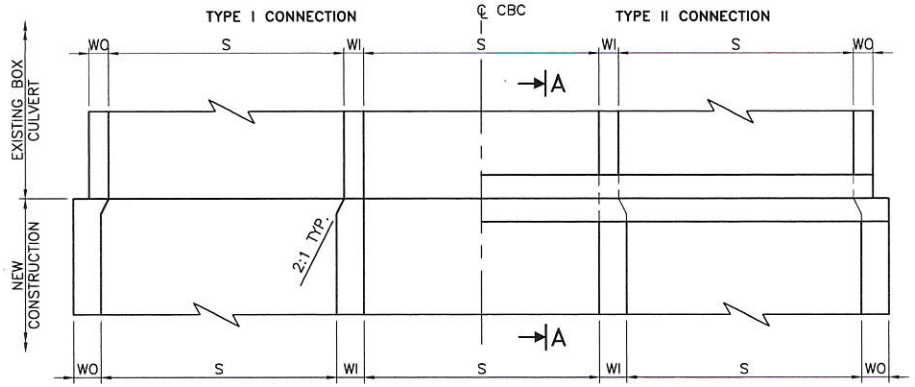

SECTION THRU CULVERT WALLS

(ODD NUMBER OF CELLS)
SIMALAR FOR SKEWED BOXES

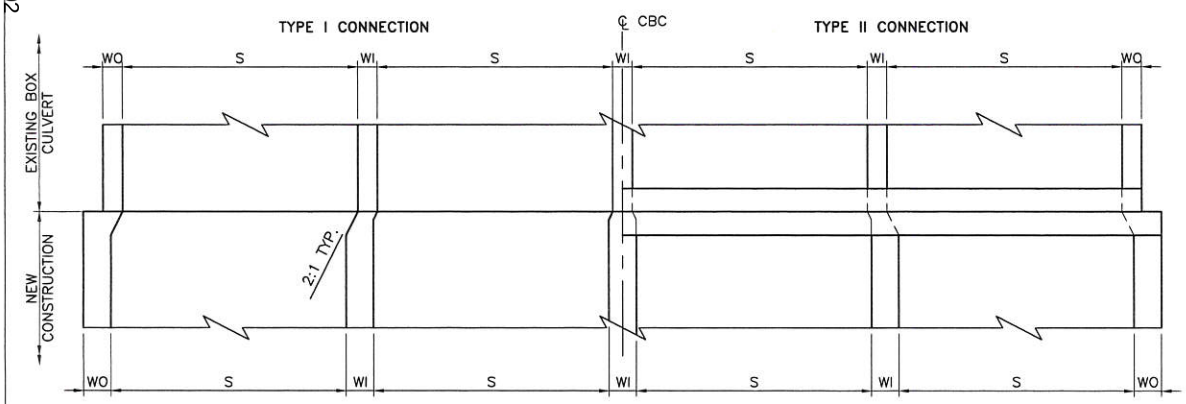

SECTION THRU CULVERT WALLS

(EVEN NUMBER OF CELLS)
SIMALAR FOR SKEWED BOXES

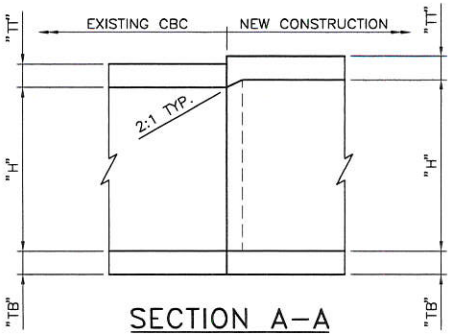

SECTION A–A

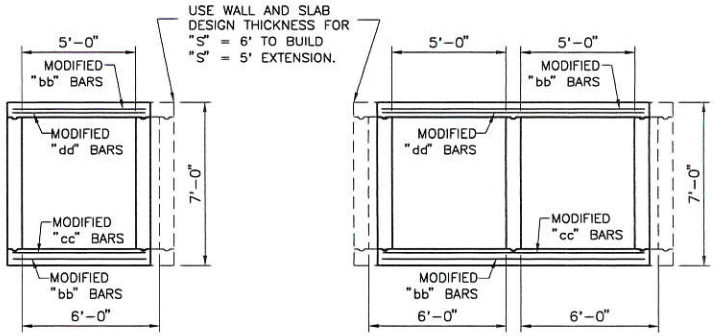

MODIFICATION OF DESIGN TABLES TO ACCOMODATE 5', 7' AND 9' SPAN CULVERTS

NOTE: MODIFY TABLE LENGTH OF "bb", "dd", AND "cc" BARS BY ONE FOOT LESS TO BUILD SHORTER SPAN CBC. THIS ONLY APPLIES TO SPAN THAT ARE ONE FOOT LESS, I.E. USE DESIGN TABLE FOR "S" = 6' FOR BUILDING "S" = 5'. ALL OTHER BARS ARE TO PROVIDED AT TABLE SIZE, LENGHT, AND SPACING.

NO.	DATE	REV. BY	DESCRIPTION

REVISIONS (OR CHANGE NOTICES)

NEW MEXICO
DEPARTMENT OF TRANSPORTATION
STANDARD DRAWING

CONCRETE BOX CULVERT EXTENSION
ALL DESIGN FILLS – ALL SKEWS
METHOD OF EXTENDING CB–20 & 30

APPROVED _____ DESIGN ENGINEER APR 9, 07 DATE

DESIGNED BY TLB DRAWN BY SGL CHECKED BY HDR

511–66–4/6 4 OF 6

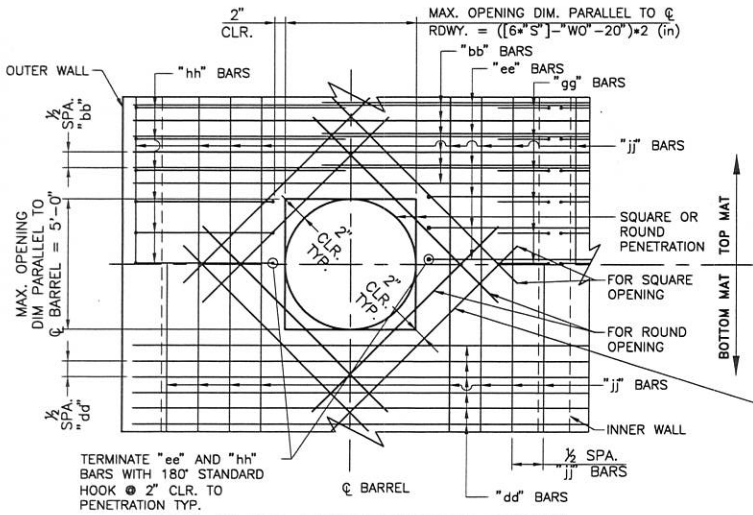

TOP SLAB PENETRATION DETAIL

NOTE: MOVE "bb", "dd" AND "jj" BARS FROM LOCATION AT PENETRATION AND PLACE EQUALLY AT ½ SPACING ON EACH SIDE OF OPENING.

EXAMPLES:

TOP SLAB – "S"=10' "H"=7', DESIGN FILL "B", DOUBLE BARREL CBC: MAX. OPENING DIM. PARALLEL TO ℄ RDWY. = ([6*10]-9-20)*2 = 62 (in)

SIDE WALL – S"=10' "H"=7', DESIGN FILL "B", DOUBLE BARREL CBC: MIN DIM. TO INSIDE TOP & BOTTOM OF CBC = [1.2*7]+18 = 26.4 (in)

TWO MATS OF #5 BARS INSIDE OF ALL OTHER TYPICAL REINFORCING FOR "TT" GREATER THAN 9". OTHERWISE ONE MAT OF #5 BARS. LENGTH OF BARS EQUAL TO TWICE DIM. OF OPENING.

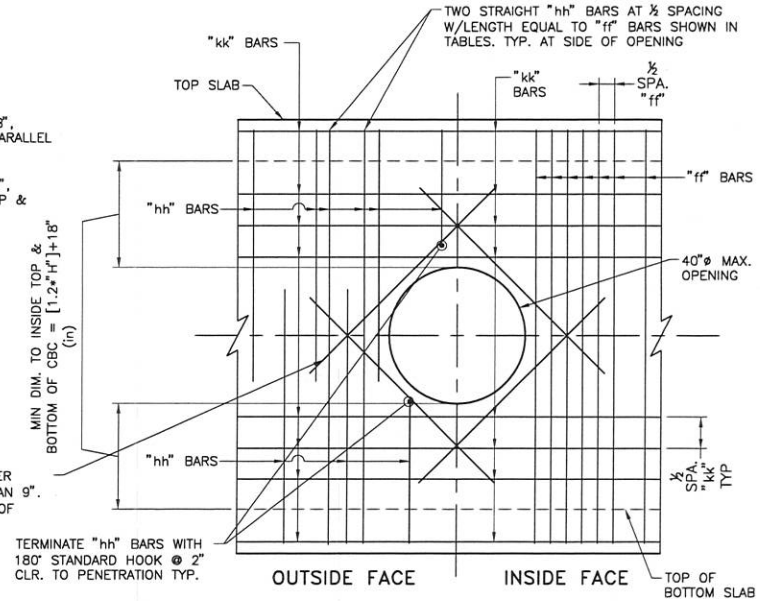

OUTER WALL PENETRATION DETAIL

NOTE: MOVE "ff" AND "kk" BARS FROM LOCATION AT PENETRATION AND PLACE EQUALLY AT ½ SPACING ON EACH SIDE OF OPENING.

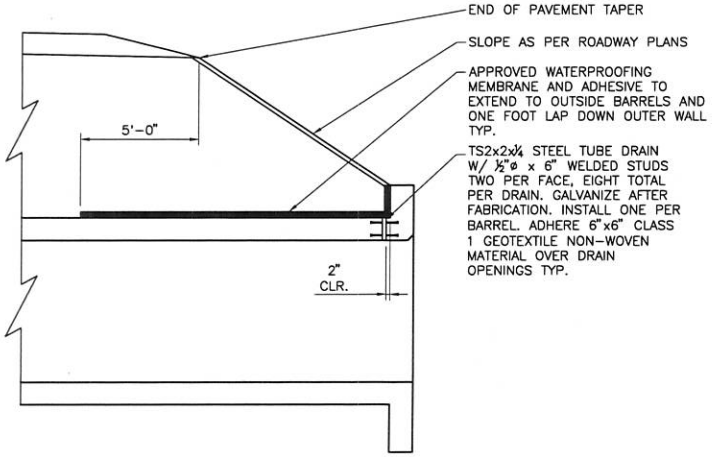

TOP SLAB MEMBRANE AND HEADWALL DRAIN DETAIL

NOTE: THIS DETAIL SHALL BE CONSTRUCTED FOR ANY NEW CBC OR CBC EXTENSION.

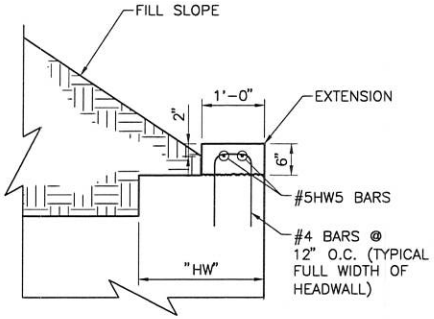

HEADWALL EXTENSION DETAIL

NOTE: IF "HW" IS GREATER THAN 12" ADD EXTENSION AND FILL AS SHOWN. 2" DIM. TYP. OF ALL HEADWALL.

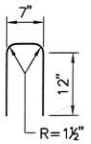

BAR DETAIL

PAYMENT NOTE: ALL WORK AND MATERIALS ASSOCIATED WITH HEADWALL EXTENSION, MEMBRANE, DRAINS, AND PENETRATIONS SHALL BE CONSIDERED INCIDENTAL TO CONSTRUCTION OF A FINISHED CBC AND NO FURTHER PAYMENT WILL BE MADE FOR THESE INCLUDED ITEMS.

NO.	DATE	REV. BY	DESCRIPTION

REVISIONS (OR CHANGE NOTICES)

NEW MEXICO
DEPARTMENT OF TRANSPORTATION
STANDARD DRAWING

CONCRETE BOX CULVERT EXTENSION
ALL DESIGN FILLS – ALL SKEWS
MISCELLANEOUS DETAILS & BACKFILL

APPROVED _____ DESIGN ENGINEER APR 9, 07 DATE

DESIGNED BY TLB DRAWN BY SGL CHECKED BY HDR

511-66-5/6 5 OF 6

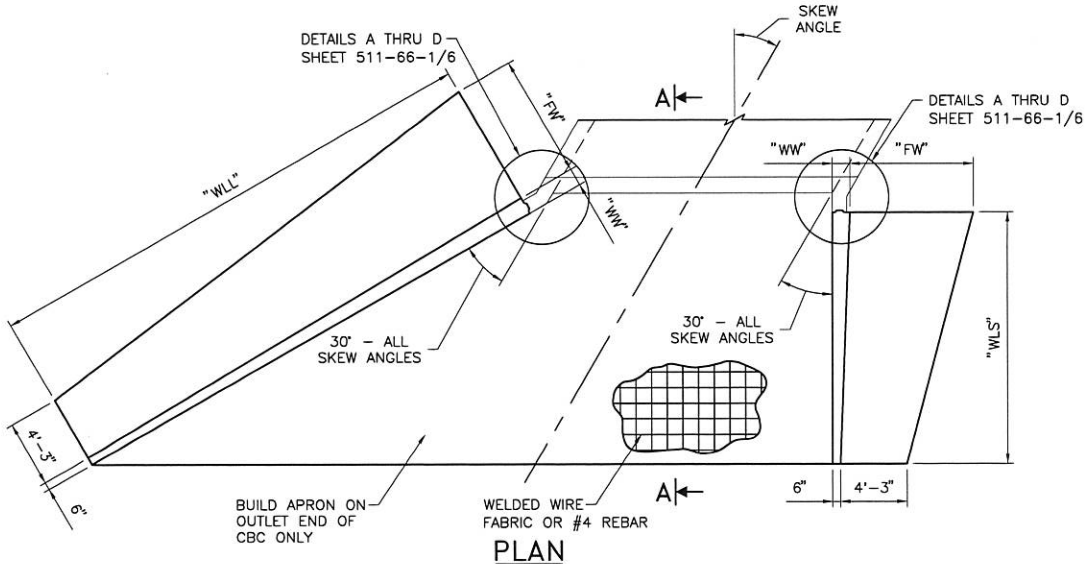

PLAN

SIMILAR ALL SKEWS

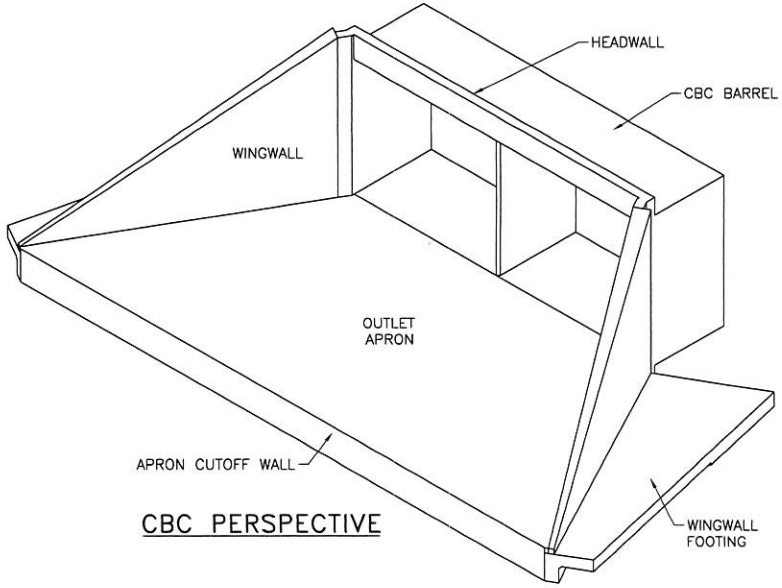

CBC PERSPECTIVE

REINFORCING BARS

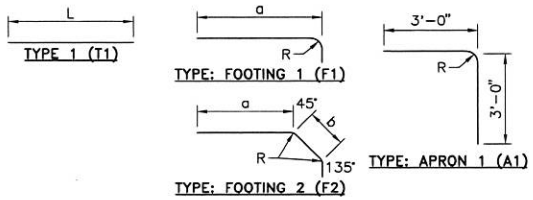

CONTRACTOR IS RESPONSIBLE FOR DETERMINING ALL BAR LENGTHS DIMENSIONS FOR THE WINGWALL REINFORCEMENT IN ACCORDANCE WITH TABLE ON DRAWINGS 511-67-1/2 AND 511-67-2/2.

WINGWALL DIMENSIONS

WINGS A AND B			0° SKEW		15° SKEW		30° SKEW		45° SKEW	
"H"	"WW"	"FW"	"WLL"	"WLS"	"WLL"	"WLS"	"WLL"	"WLS"	"WLL"	"WLS"
2'-0"	0'-9½"	6'-8½"	8'-5"	8'-5"	10'-3"	7'-6"	14'-6"	7'-3"	28'-0"	7'-6"
3'-0"	0'-10¼"	7'-2½"	10'-1"	10'-1"	12'-5"	9'-1"	17'-6"	8'-9"	33'-10"	9'-1"
4'-0"	0'-11½"	7'-8½"	11'-10"	11'-10"	14'-6"	10'-8"	20'-6"	10'-3"	39'-8"	10'-8"
5'-0"	1'-0"	8'-2½"	13'-7"	13'-7"	16'-8"	12'-2"	23-'6"	11'-9"	45'-5"	12'-2"
6'-0"	1'-0¾"	8'-9"	15'-4"	15'-4"	18'-9"	13'-9"	26'-6"	13'-3"	51'-3"	13'-9"
7'-0"	1'-1½"	9'-3"	17'-1"	17'-1"	20'-11"	15'-3"	29'-6"	14'-9"	57'-0"	15'-3"
8'-0"	1'-2¼"	9'-9"	18'-9"	18'-9"	23'-0"	16'-10"	32'-6"	16'-3"	62'-10"	16'-10"
9'-0"	1'-3¾"	10'-3"	20'-6"	20'-6"	25'-1"	18'-5"	35'-6"	17'-9"	68'-7"	18'-5"
10'-0"	1'-4"	10'-9"	22'-3"	22'-3"	27'-3"	19'-11"	38'-6"	19'-3"	74'-5"	19'-11"
11'-0"	1'-4¾"	11'-3"	24'-0"	24'-0"	29'-4"	21'-6"	41'-6"	20'-9"	80'-2"	21'-6"
12'-0"	1'-5½"	11'-9"	25'-9"	25'-9"	31'-6"	23'-1"	44'-6"	22'-3"	86'-0"	23'-1"
13'-0"	1'-6¼"	12'-3"	27'-5"	27'-5"	33'-7"	24'-7"	47'-6"	23'-9"	91'-9"	24'-7"
14'-0"	1'-7"	12'-9"	29'-2"	29'-2"	35'-9"	26'-2"	50'-6"	25'-3"	97'-7"	26'-2"

NOTE: TABLE DIMENSIONS SHOWN ARE FOR SLOPES OF 1.5 TO 1. FOR OTHER SLOPES MULTIPLY TABLE VALUES OF "WLS" AND "WLS" BY (SLOPE/1.5).

NOTES:

1. WORKMANSHIP AND MATERIALS SHALL CONFORM TO NEW MEXICO DEPARTMENT OF TRANSPORTATION'S STANDARD SPECIFICATIONS FOR HIGHWAY AND BRIDGE CONSTRUCTION, CURRENT EDITION, AND APPLICABLE SUPPLEMENTAL SPECIFICATIONS AND SPECIAL PROVISIONS.
2. CONCRETE SHALL BE CLASS AA. CHAMFER ALL EDGES OF CONCRETE ¾".
3. REINFORCING BARS SHALL CONFORM TO REQUIREMENTS OF AASHTO M 31. REINFORCING BARS SHALL BE GRADE 60. DIMENSIONS SHOWN REFER TO CENTER LINES OF BARS UNLESS NOTED OTHERWISE.
4. MINIMUM SPLICE LENGTH SHALL BE 2'-0" ON ALL #4 BARS, AND 2'-6" ON ALL #5 BARS. LONGITUDINAL SPLICES SHOULD BE STAGGERED BY A MINIMUM OF TWO TIMES THE SPLICES LENGTH IN ADJACENT BARS. NO SPLICES SHALL BE ALLOWED IN VERTICAL BARS EXCEPT AS SHOWN ON THE DRAWINGS. SPLICES SHALL NOT BE ALLOWED IN TRANSVERSE DIRECTION.

   R SHALL BE 1¾" FOR #4 BARS AND 2¼" FOR #5 BARS.

NO.	DATE	REV. BY	DESCRIPTION

REVISIONS (OR CHANGE NOTICES)

NEW MEXICO
DEPARTMENT OF TRANSPORTATION
STANDARD DRAWING

CONCRETE BOX CULVERT
WINGWALL & OUTLET APRON ALL SKEWS
PLAN, PERSPECTIVE & DIMENSIONS

APPROVED [signature] DESIGN ENGINEER — APR 9, 07 DATE

DESIGNED BY TLB DRAWN BY SGL CHECKED BY HDR

511-67-1/2 1 OF 2

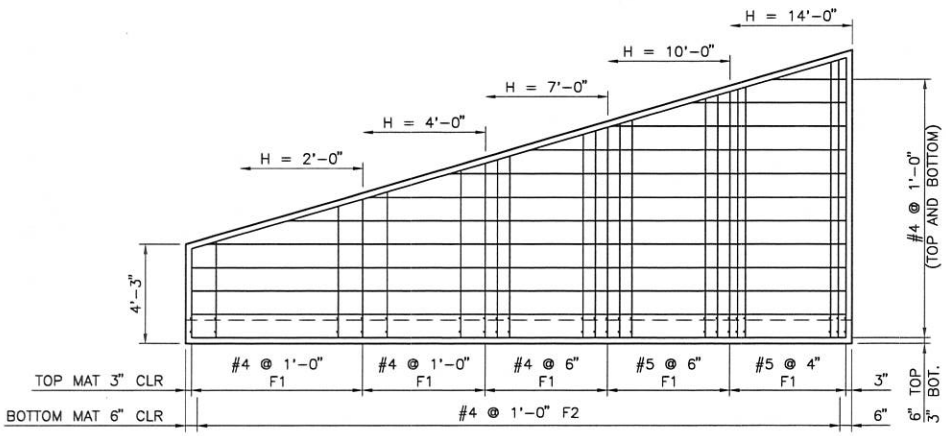

FOOTING PLAN

CONTRACTOR IS RESPONSIBLE FOR DETERMINING ALL BAR LENGHT DIMENSIONS FOR THE WINGWALL REINFORCEMENT IN ACCORDANCE WITH DRAWINGS 511-67-1/2 AND 511-67-2/2.

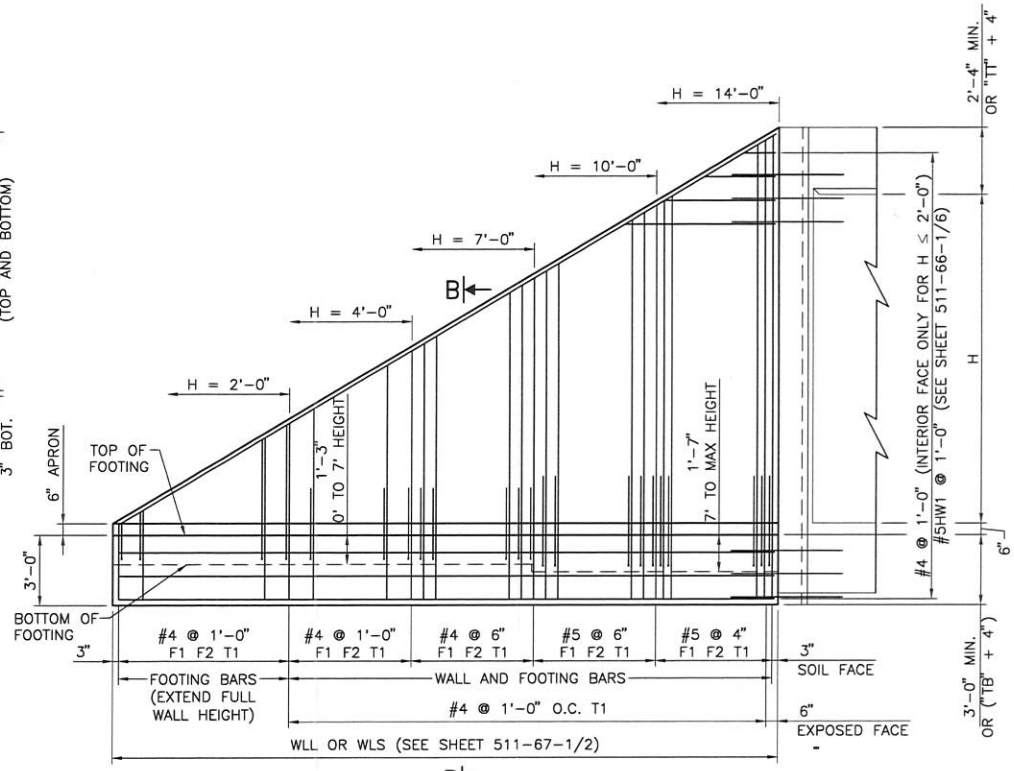

WINGWALL ELEVATION

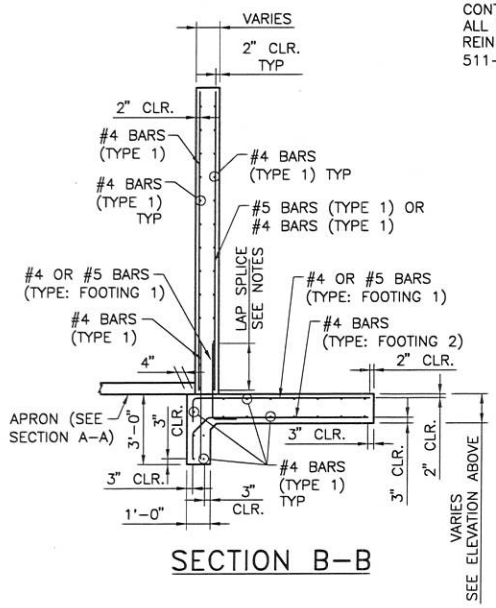

SECTION B-B

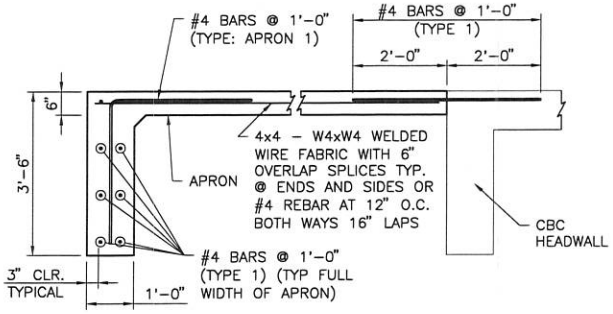

SECTION A-A

NO.	DATE	REV. BY	DESCRIPTION

REVISIONS (OR CHANGE NOTICES)

NEW MEXICO
DEPARTMENT OF TRANSPORTATION
STANDARD DRAWING

CONCRETE BOX CULVERT
WINGWALL & OUTLET APRON ALL SKEWS
STRUCTURAL SECTIONS AND REBAR

APPROVED [signature] DESIGN ENGINEER APR 9, 07 DATE

DESIGNED BY JB DRAWN BY SGL CHECKED BY HDR

511-67-2/2 2 OF 2

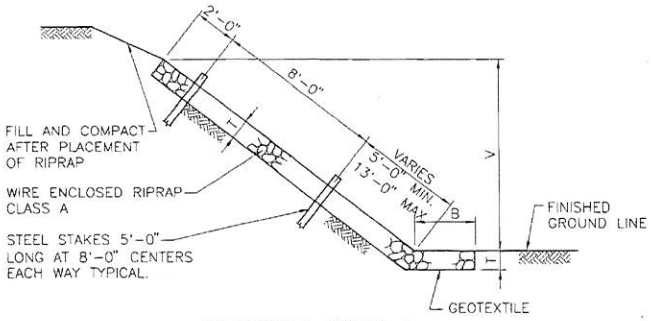

SECTION TYPE I

QUANTITIES PER LINEAR FOOT	
SLOPE	RIPRAP (CU. YDS.)
1.5 : 1	$\frac{T}{27}(B + 1.803\ V + 0.303\ T)$
1.75 : 1	$\frac{T}{27}(B + 2.016\ V + 0.266\ T)$
2 : 1	$\frac{T}{27}(B + 2.236\ V + 0.236\ T)$
3 : 1	$\frac{T}{27}(B + 3.162\ V + 0.162\ T)$
4 : 1	$\frac{T}{27}(B + 4.123\ V + 0.123\ T)$

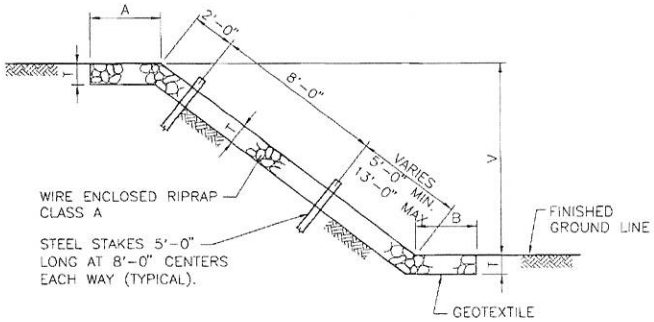

SECTION TYPE II

QUANTITIES PER LINEAR FOOT	
SLOPE	RIPRAP (CU. YDS.)
1 : 1	$\frac{T}{27}(A + B + 1.414V)$
1.5 : 1	$\frac{T}{27}(A + B + 1.803V)$
1.75 : 1	$\frac{T}{27}(A + B + 2.016V)$
2 : 1	$\frac{T}{27}(A + B + 2.236V)$
3 : 1	$\frac{T}{27}(A + B + 3.162V)$
4 : 1	$\frac{T}{27}(A + B + 4.123V)$

GENERAL NOTES

1. WIRE FABRIC FOR RIP RAP SHALL BE "W" OR HEXAGONAL MESH AND MEET THE REQUIREMENTS LISTED IN SECTION 602 OF THE NMDOT STANDARD SPECIFICATIONS FOR HIGHWAY AND BRIDGE CONSTRUCTON, CURRENT EDITION.
2. STEEL STAKES MAY BE RAILROAD RAILS WEIGHING NOT LESS THAN 30 LBS. PER YARD, 4" NOMINAL DIAMETER STANDARD STRENGTH GALVANIZED STEEL PIPE, OR L 4" x 4"x 3/8" STEEL ANGLES. STEEL STAKES SHALL PROJECT 6" ABOVE TOP OF RIPRAP. STEEL STAKES ARE CONSIDERED INCIDENTAL TO THE COMPLETION OF THE WORK AND NO DIRECT MEASUREMENT OR PAYMENT WILL BE MADE THEREFORE.
3. IF LENGTH OF SLOPE IS 15 FEET OR LESS, ONLY ONE ROW OF STEEL STAKES 2 FEET FROM THE TOP EDGE OF RIPRAP WILL BE REQUIRED UNLESS OTHERWISE NOTED ON PLANS.
4. FOR DIMENSIONS A, B, V, & T. SEE BRIDGE OR ROADWAY PLANS.
5. T=12" UNLESS OTHERWISE SHOWN ON PLANS; T=18" AT BRIDGES.
6. FASTENERS FOR SPLICES AND/OR SELVEDGE END CONNECTORS MAY BE WIRE TIES, INTERLOCKING WIRE CLIPS, HOG RINGS, OR LACING WIRE. ONLY FASTENERS WHICH APPEAR ON THE DEPARTMENT'S "APPROVED PRODUCTS LIST" MAY BE USED.
7. LACING SHALL BE CONTINUOUS AS FAR AS IS PRACTICAL AND SHALL PASS THROUGH EACH MESH OPENING.
8. WHERE SPLICING IS NECESSARY, AN OVERLAP OF LACING OF AT LEAST 1 FOOT SHALL BE PROVIDED.

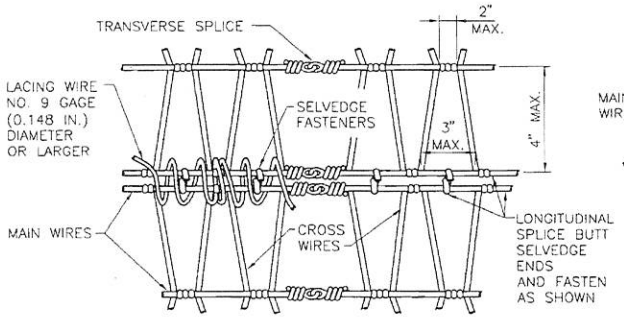

NORMAL INTERSECTION SPLICES

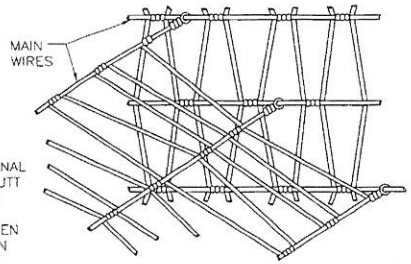

SKEWED INTERSECTION SPLICE

"W" MESH

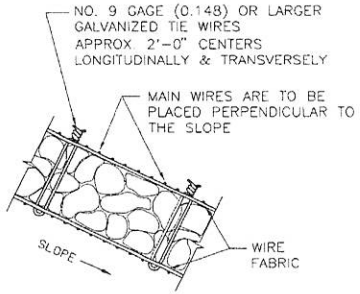

TYPICAL SECTION

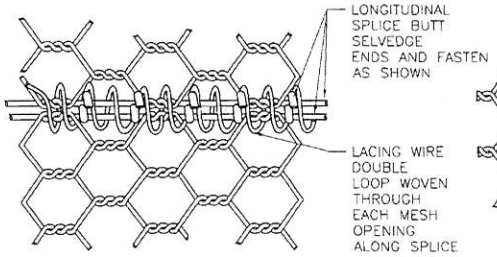

NORMAL INTERSECTION SPLICE

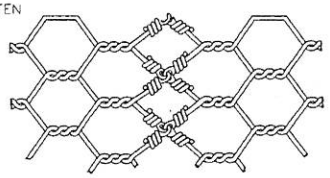

TRANSVERSE SPLICE

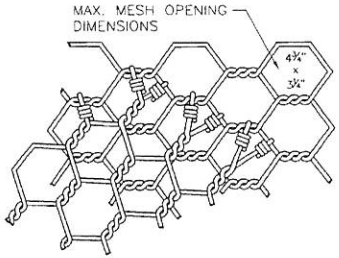

SKEWED INTERSECTION SPLICE

HEXAGONAL MESH

NO.	DATE	REV.BY	DESCRIPTION

REVISIONS (OR CHANGE NOTICES)

NEW MEXICO
DEPARTMENT OF TRANSPORTATION
STANDARD DRAWING

WIRE ENCLOSE RIPRAP
CLASS "A"

DESIGNED BY ____ DRAWN BY SKL CHECKED BY YML

602-01-1/1 1 of 1

SUMMARY_
FILENAME

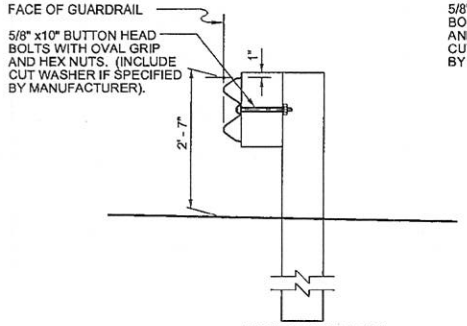

INITIAL INSTALLATION

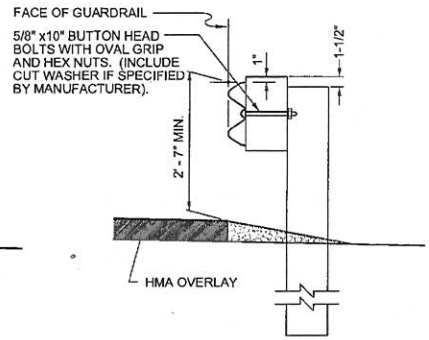

RAISED RAIL ELEMENT FOR HMA OVERLAYS

SINGLE FACE W-BEAM GUARDRAIL

(PAID BY LIN. FT.)

NOTES

1. SINGLE AND DOUBLE FACE W-BEAM GUARDRAIL POST SPACING SHALL BE 6'-3" ON CENTER.
2. SINGLE AND DOUBLE FACE W-BEAM GUARDRAIL SHALL USE W6 x 8.5 STEEL POSTS FOR SPACER BLOCK DETAILS, SEE SHEET 606-GR31-4/20.
3. EXISTING POSTS SHALL NOT BE RAISED. REPLACE POSTS AS NECESSARY TO ACHIEVE REQUIRED GUARDRAIL HEIGHT.
4. REFLECTOR TABS SHALL BE PLACED AT 25' INTERVALS (EVERY 25' AT SPLICE) ON ALL GUARDRAIL INSTALLATIONS (12'-6" ON 2 LANE HIGHWAY). THE COLOR OF THE REFLECTIVE SHEETING ON THE REFLECTOR TABS SHALL BE THE SAME AS THE COLOR OF THE SHOULDER LINE PAVEMENT MARKING IN FRONT OF THE BARRIER. TABS SHALL HAVE A MINIMUM OF 8.75 SQ. IN. OF TYPE VIII OR BETTER REFLECTIVE SHEETING ON BOTH SIDES AND SHALL ATTACH SECURELY UNDER HEAD OF 5/8" BUTTON HEAD BOLT.
5. SPLICES SHALL BE LAPPED SO THE FREE END DOES NOT FACE TRAFFIC FLOW.
6. CONSTRUCTION TOLERANCE SHALL BE ± 1/2" FOR GUARDRAIL HEIGHT.
7. GUARDRAIL FACE MAY BE PLACED AT EDGE OF SHOULDER ONLY WHEN SLOPES BEHIND GUARDRAIL WILL NOT ALLOW FOR 2' TYPICAL SETBACK, SEE SHEET 606-GR31-6/20.
8. POST LEAVE OUT SHALL BE OBSERVED WHEN POSTS ARE RESTRAINED BY ROCK, ASPHALT, OR CONCRETE OR ARE PLACED IN THE SURFACING TAPER. SEE SHEET 606-GR31-5/20 FOR POST LEAVEOUT.
9. DOUBLE FACE W-BEAM GUARDRAIL SHALL BE PAID AS MEASURED ALONG CENTERLINE OF POST OF INSTALLATION. EACH RAIL ELEMENT WILL NOT BE MEASURED AND PAID SEPARATELY.
10. SEE SHEET 606-GR31-6/20 FOR TYPICAL GUARDRAIL INSTALLATIONS.

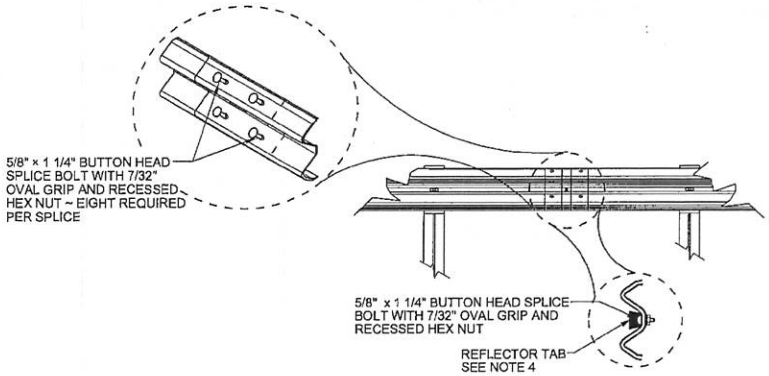

REFLECTOR TABS AT SPLICE

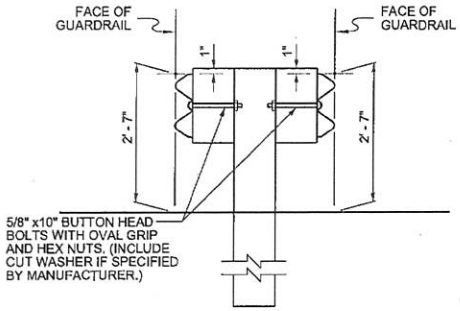

DOUBLE FACE W-BEAM GUARDRAIL

(PAID BY LIN. FT.)

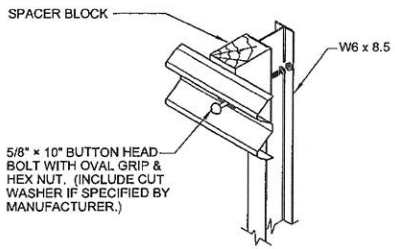

ASSEMBLY DETAIL W-BEAM

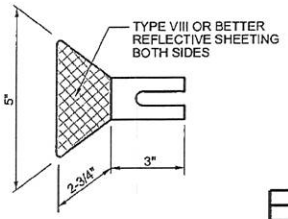

REFLECTORIZED WASHER

NO.	DATE	REV. BY	DESCRIPTION

REVISIONS (OR CHANGE NOTICES)

NEW MEXICO
DEPARTMENT OF TRANSPORTATION
STANDARD DRAWING

W-BEAM GUARDRAIL

APPROVED _____ DESIGN ENGINEER _____ DATE

DRAWING SCALE = NOT TO SCALE

606-GR31-1/20

edd_trf\preliminary drawings & docs\roadside\Working Folder~GR Type 31 Standards\ GR31-1_Beam Guardrail Types 1-2.dgn

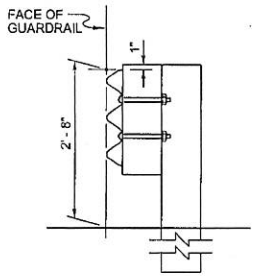

RAIL ASSEMBLY

SINGLE FACE THRIE BEAM GUARDRAIL
(PAID BY LIN. FT.)

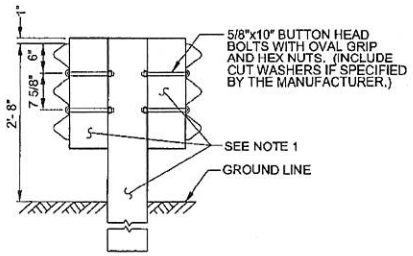

STEEL POST ASSEMBLY

DOUBLE FACE THRIE BEAM GUARDRAIL
(PAID BY LIN. FT.)

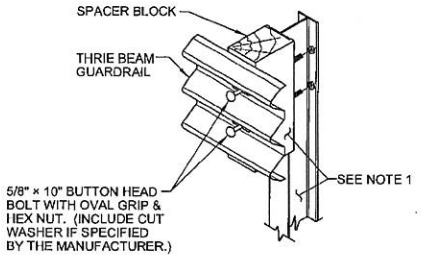

STEEL POST ASSEMBLY

ASSEMBLY DETAIL
THRIE BEAM

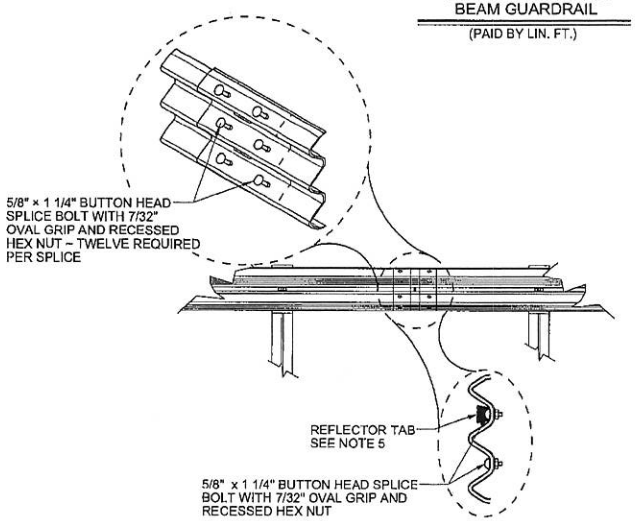

REFLECTOR TAB
AT SPLICE

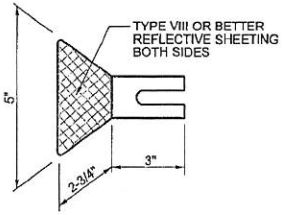

REFLECTORIZED WASHER

NOTES

1. SINGLE AND DOUBLE FACE THRIE BEAM GUARDRAIL SHALL USE W6x15 STEEL POSTS. FOR ADDITIONAL DETAILS SEE SHEET 606-GR31-4/20.
2. UNLESS OTHERWISE SPECIFIED THRIE BEAM GUARDRAIL POST SPACING SHALL BE 6' - 3" ON CENTER.
3. BOLTS ARE TO BE INSTALLED AS SHOWN SO THAT THE THREADED END OF THE BOLTS AND NUTS ARE PLACED AWAY FROM TRAFFIC SIDE OF RAIL.
4. DO NOT PLACE ANY WASHERS UNDER THE BOLTS ON THE TRAFFIC SIDE OF THE BARRIER.
5. REFLECTOR TABS SHALL BE PLACED AT 25' INTERVALS (EVERY 25' AT SPLICE) ON ALL GUARDRAIL INSTALLATIONS (12'-6" ON 2 LANE HIGHWAY). THE COLOR OF THE REFLECTIVE SHEETING ON THE REFLECTOR TABS SHALL BE THE SAME AS THE COLOR OF THE SHOULDER LINE PAVEMENT MARKING IN FRONT OF THE BARRIER. TABS SHALL HAVE A MINIMUM OF 8.75 SQ. IN. OF TYPE VIII OR BETTER REFLECTIVE SHEETING ON BOTH SIDES AND SHALL ATTACH SECURELY UNDER HEAD OF 5/8" BUTTON HEAD BOLT.
6. SPLICES SHALL BE LAPPED SO THE FREE END DOES NOT FACE TRAFFIC FLOW.
7. CONSTRUCTION TOLERANCE SHALL BE +/- 1/2" FOR GUARDRAIL HEIGHT.
8. SEE SHEET 606-G31-6/20 FOR TYPICAL GUARDRAIL INSTALLATION.

AFSHIN JIAN
NEW MEXICO
16228
5-6-14
LICENSED PROFESSIONAL ENGINEER

DRAWING SCALE = NOT TO SCALE

NO.	DATE	REV. BY	DESCRIPTION

REVISIONS (OR CHANGE NOTICES)

NEW MEXICO
DEPARTMENT OF TRANSPORTATION
STANDARD DRAWING

THRIE BEAM GUARDRAIL

APPROVED _____ DESIGN ENGINEER _____ DATE

606-GR31-2/20

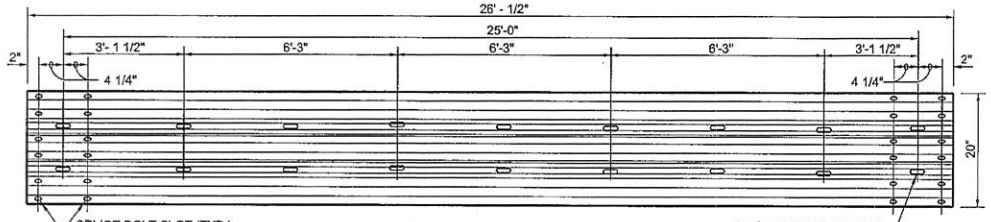

TYPICAL RAIL ELEMENT
25'-0" THRIE BEAM

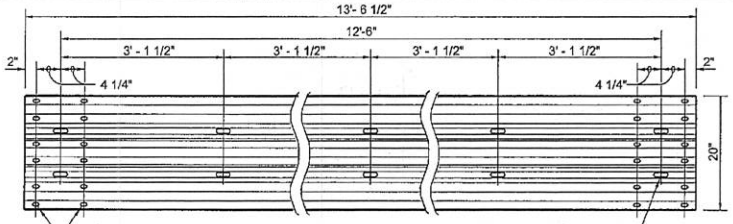

TYPICAL RAIL ELEMENT
12'-6" THRIE BEAM

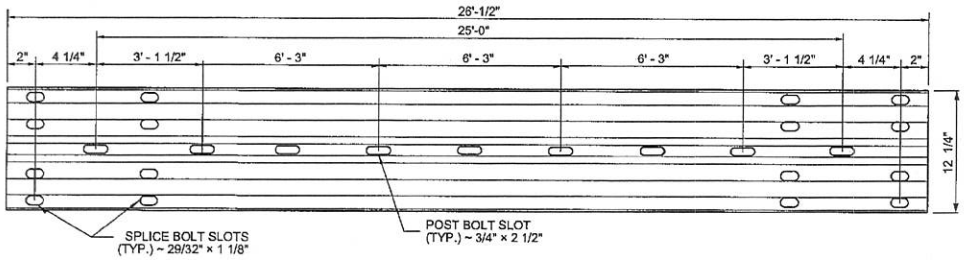

TYPICAL RAIL ELEMENT
25'-0" W-BEAM

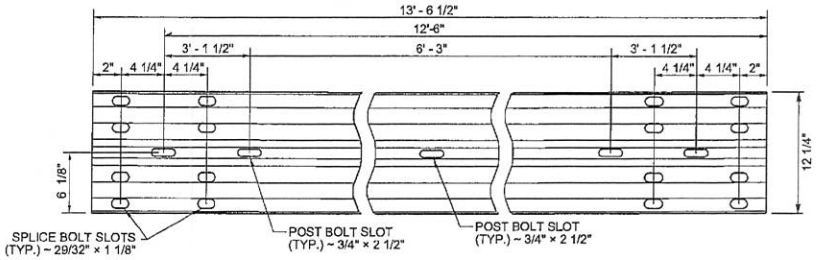

TYPICAL RAIL ELEMENT
12'-6" W-BEAM

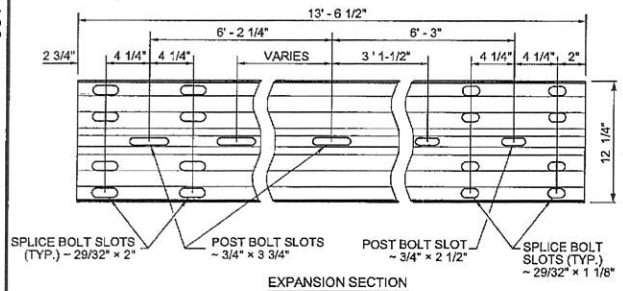

EXPANSION SECTION
W-BEAM

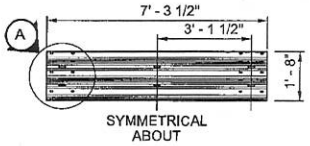

SHORT THRIE BEAM ELEMENT

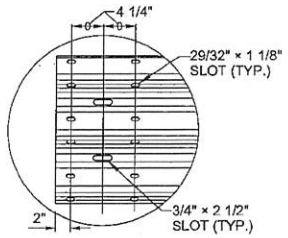

DETAIL A

LEFT
(MIRROR OF RIGHT)

DRAWING SCALE = NOT TO SCALE

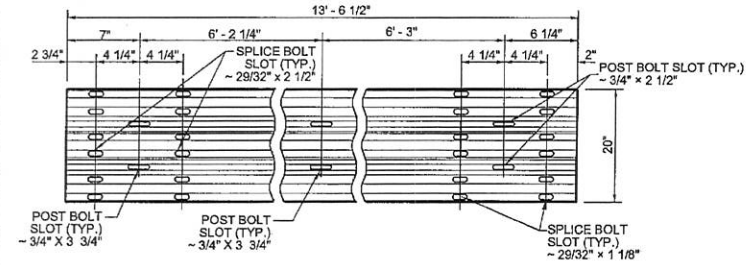

EXPANSION SECTION
THRIE BEAM

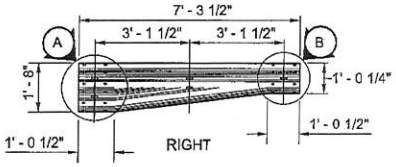

REDUCER ELEMENT
(PAID AS LIN. FT. OF THRIE BEAM)

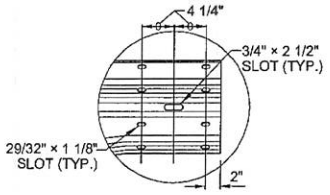

DETAIL B

NO.	DATE	REV. BY	DESCRIPTION

REVISIONS (OR CHANGE NOTICES)

NEW MEXICO
DEPARTMENT OF TRANSPORTATION
STANDARD DRAWING

BEAM GUARDRAIL
ELEMENTS

APPROVED _____ DESIGN ENGINEER _____ DATE

606-GR31-3/20

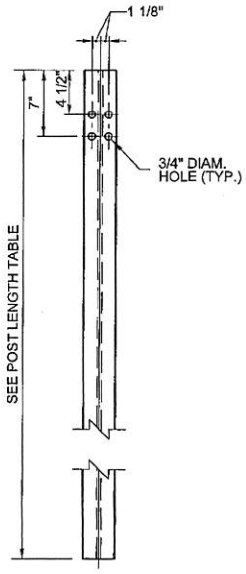

W-BEAM
(W6x8.5)

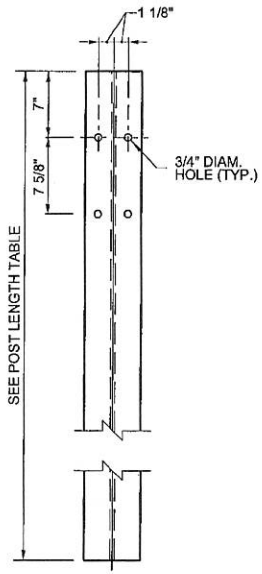

THRIE BEAM
(W6x15)

STEEL POST

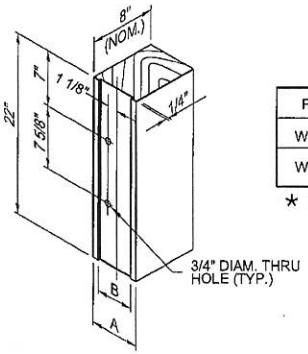

THRIE BEAM SPACER BLOCK
FOR STEEL POST
SEE NOTE

POST	A	B
W6 × 8.5	6"*	4 1/4"
W6 × 15	8"*	6 1/4"

* NOMINAL (NOM.)

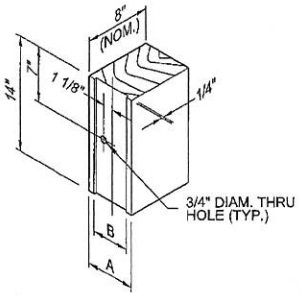

W-BEAM SPACER BLOCK
FOR STEEL POST
SEE NOTE

POST LENGTH TABLE	
DESCRIPTION	STEEL
SINGLE FACE W-BEAM	6' - 0"
DOUBLE FACE W-BEAM	6' - 0"
SINGLE FACE THRIE-BEAM	6' - 6"
DOUBLE FACE THRIE-BEAM	7' - 0"

NOTE:

SPACER BLOCKS MAY CONSIST OF WOOD, PLASTIC, OR COMPOSITE MATERIAL ON THE APPROVED PRODUCTS LIST.

AFSHIN JIAN
NEW MEXICO
16226
5-6-14
LICENSED PROFESSIONAL ENGINEER

DRAWING SCALE = NOT TO SCALE

NO.	DATE	REV. BY	DESCRIPTION

REVISIONS (OR CHANGE NOTICES)

NEW MEXICO
DEPARTMENT OF TRANSPORTATION
STANDARD DRAWING

BEAM GUARDRAIL
POSTS AND BLOCKS

APPROVED _____ DESIGN ENGINEER _____ DATE

606-GR31-4/20

SUMMARY
FILENAME

A = DEPTH OF SOIL OVER ROCK FORMATION

B = DEPTH OF EMBEDMENT INTO ROCK FORMATION

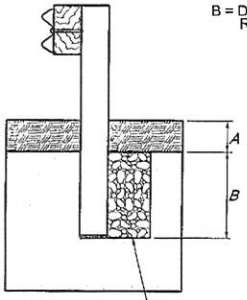

BACKFILL WITH CLEAN COARSE AGGREGATE WITH AN AVERAGE PARTICLE DIAMETER BETWEEN 1/4" AND 1/2". PLACE IN LAYERS AND TAMP.

FOR OVERLYING SOIL DEPTHS (A), RANGING FROM 0" TO 18", THE DEPTH INTO ROCK (B) IS EQUAL TO 24 IN.

CASE 1

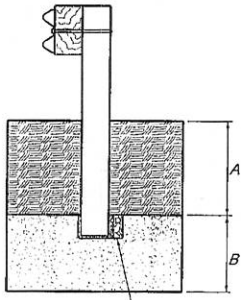

BACKFILL WITH CLEAN COARSE AGGREGATE WITH AN AVERAGE PARTICLE DIAMETER BETWEEN 1/4" AND 1/2". PLACE IN LAYERS AND TAMP.

FOR OVERLYING SOIL DEPTHS (A), RANGING FROM 18" TO FULL POST EMBEDMENT DEPTH, THE REQUIRED DEPTH INTO ROCK (B) IS EQUAL TO FULL POST EMBEDMENT DEPTH MINUS (A). FULL POST EMBEDMENT FOR W-BEAM IS ABOUT 41 IN.

CASE 2

* THIS WIDTH MAY BE INCREASED TO 15" TO ACCOMMODATE CONSTRUCTION TOLERANCES.

** 2' DIAMETER HOLE MAY BE USED.

PLAN VIEW STEEL POSTS

EITHER HOLE CONFIGURATION ACCEPTABLE

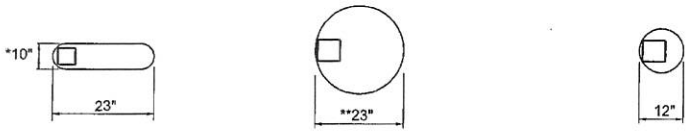

* THIS WIDTH MAY BE INCREASED TO 15" TO ACCOMMODATE CONSTRUCTION TOLERANCES.

** 2' DIAMETER HOLE MAY BE USED.

PLAN VIEW WOOD POSTS

EITHER HOLE CONFIGURATION ACCEPTABLE

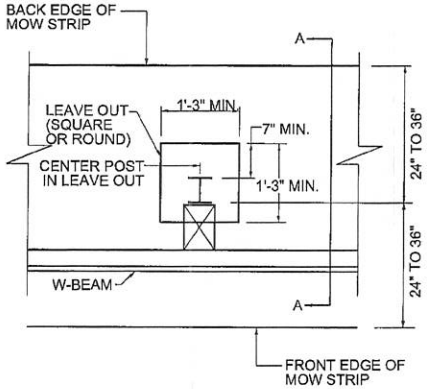

STEEL POST DETAIL

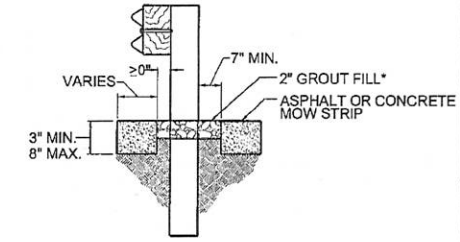

*GROUT MATERIAL HAS A 28-DAY COMPRESSIVE STRENGTH OF 120 PSI OR LESS.

SECTION A-A

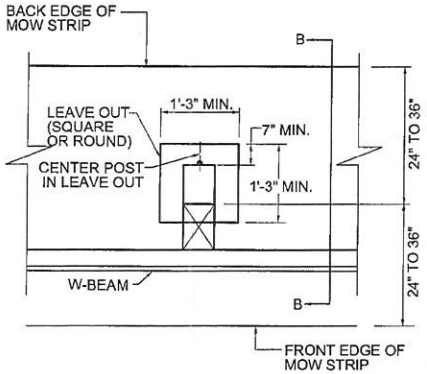

WOOD POST DETAIL

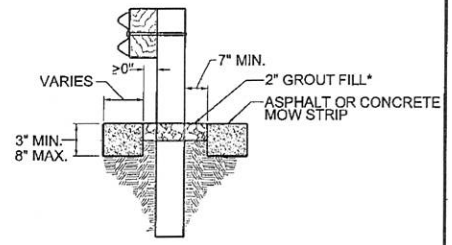

*GROUT MATERIAL HAS A 28-DAY COMPRESSIVE STRENGTH OF 120 PSI OR LESS.

SECTION B-B

NOTE:

1. POST LEAVEOUT SHALL BE OBSERVED WHEN POSTS ARE RESTRAINED BY ROCK, ASPHALT, OR CONCRETE. LEAVEOUT IS REQUIRED BY FHWA MEMO B64-B, (SEE FHWA WEBSITE). GUARDRAIL POST LEAVEOUT ALLOWS POSTS TO ROTATE IN THEIR EMBEDMENT SUCH THAT VEHICLE IMPACT LOADS ARE DISTRIBUTED THROUGH THE POST INTO THE EMBEDMENT MATERIAL PRIOR TO THE POST BREAKING PREMATURELY.
2. MOW STRIP MAY BE USED FOR VEGETATION CONTROL. WHERE PAVED SHOULDER IS CONSTRUCTED WITHIN 24" IN FRONT OF POST, CONSTRUCT MOW STRIP TO EDGE OF PAVED SHOULDER.
3. MOW STRIP MATERIAL SHALL BE EITHER ASPHALTIC PAVEMENT OR REINFORCED CONCRETE (WIRE MESH OR SYNTHETIC FIBER). MINIMUM THICKNESS IS 3 INCHES.
4. CONSTRUCTION OF LEAVEOUTS AND MOW STRIPS SHALL BE CONSIDERED INCIDENTAL TO THE GUARDRAIL.

DRAWING SCALE = NOT TO SCALE

NO.	DATE	REV. BY	DESCRIPTION

REVISIONS (OR CHANGE NOTICES)

NEW MEXICO
DEPARTMENT OF TRANSPORTATION
STANDARD DRAWING

GUARDRAIL POST DETAILS
IN ROCK FORMATION &
IN MOW STRIP APPLICATION

APPROVED _____ DESIGN ENGINEER _____ DATE

606-GR31-5/20

edd_trf\preliminary drawings & docs\roadside\Working Folder~GR Type 31 Standards\ GR31-5 Guardrail Post Details Rock & Mow Strip App.dgn

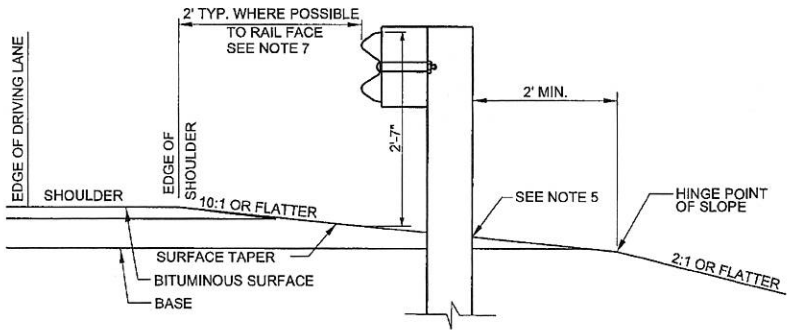

W-BEAM GUARDRAIL STANDARD
INSTALLATION AND SURFACING DETAILS

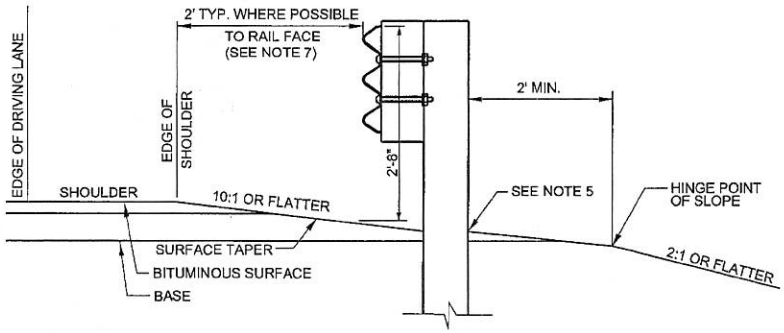

THRIE BEAM GUARDRAIL STANDARD
INSTALLATION AND SURFACING DETAILS

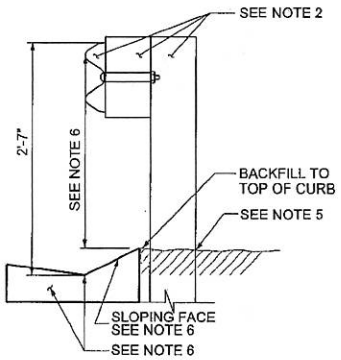

W-BEAM GUARDRAIL
AT FACE OF CURB
ALL DESIGN SPEEDS

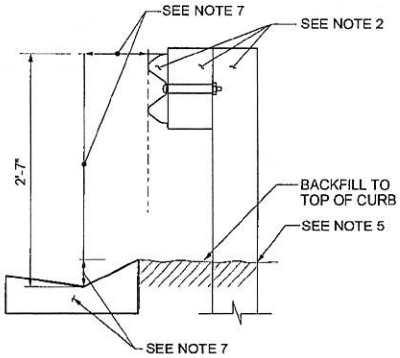

W-BEAM GUARDRAIL
AWAY FROM CURB FACE
DESIGN SPEEDS LESS THAN
45 MPH AND 45 TO 50 MPH

NOTES

1. STANDARD BEAM GUARDRAIL POST SPACING FOR SINGLE AND DOUBLE FACE W-BEAM AND THRIE BEAM SHALL BE 6'-3" ON CENTER.
2. FOR POST AND BLOCK DETAILS, SEE SHEET 606-GR31-4/20.
3. CONSTRUCTION TOLERANCE SHALL BE ± 1/2" FOR GUARDRAIL HEIGHT.
4. GUARDRAIL FACE MAY BE PLACED AT EDGE OF SHOULDER WHEN SLOPES BEHIND GUARDRAIL WILL NOT ALLOW FOR 2' TYPICAL SETBACK WHILE MAINTAINING THE MINIMUM 2' DISTANCE FROM THE SLOPE HINGE POINT.
5. POST LEAVE OUT SHALL BE OBSERVED WHEN POSTS ARE RESTRAINED BY ROCK, ASPHALT OR CONCRETE. SEE SHEET 606-GR31-5/20.
6. SINGLE FACE GUARDRAIL CAN BE USED WITH ANY COMBINATION OF SLOPING FACED CURB THAT IS 6" OR SHORTER IF INSTALLED FLUSH WITH THE FACE OF THE GUARDRAIL ON ROADS WITH DESIGN SPEEDS UP TO 50 MPH. FOR DESIGN SPEEDS FROM 50 MPH TO 60 MPH A 4" OR SHORTER SLOPING CURB IS RECOMMENDED FOR INSTALLATION WHERE THE FACE OF THE CURB IS FLUSH WITH THE FACE OF THE GUARDRAIL. FOR DESIGN SPEEDS ABOVE 60 MPH THE SLOPING FACE OF THE CURB SHALL BE 1V:3H OR FLATTER AND NO TALLER THAN 4" HIGH. THE GUTTER LINE OF THE CURB SHALL BE CONSIDERED TO BE THE SAME LOCATION AS THE FACE OF THE CURB AND SHALL ALSO BE THE LOCATION FROM WHERE GUARDRAIL HEIGHT IS MEASURED.
7. SINGLE FACE GUARDRAIL MAY BE USED WITH 6" HIGH OR SHORTER SLOPING FACED CURB AS LONG AS THE FACE OF THE GUARDRAIL IS LOCATED AT LEAST 8 FT. BEHIND THE FACE OF THE CURB ON ROADS WHERE THE DESIGN SPEED IS UP TO 45 MPH. FOR DESIGN SPEEDS FROM 45 TO 50 MPH GUARDRAILS MAY BE USED WITH 4" HIGH OR SHORTER SLOPING CURBS AS LONG AS THE FACE OF THE METAL BARRIER IS LOCATED AT LEAST 13 FT. BEHIND THE CURB. THE GUTTER LINE OF THE CURB SHALL BE WHERE OFFSET TO RAIL FACE AND RAIL HEIGHT IS MEASURED.

AFSHIN JIAN
NEW MEXICO
16226
5-6-14
LICENSED PROFESSIONAL ENGINEER

DRAWING SCALE = NOT TO SCALE

NO.	DATE	REV. BY	DESCRIPTION

REVISIONS (OR CHANGE NOTICES)

NEW MEXICO
DEPARTMENT OF TRANSPORTATION
STANDARD DRAWING

TYPICAL
INSTALLATION AND SURFACING
DETAILS

APPROVED _____ DESIGN ENGINEER _____ DATE

606-GR31- 6/20

SUMMARY
FILENAME

NOTES:

1. END TREATMENT SHOWN IS A GENERAL DEPICTION OF A NOMINAL 50' NMDOT ACCEPTED END TERMINAL THAT IS FHWA ACCEPTED AS CRASHWORTHY AT TEST LEVEL 3 (TL-3) AND MAY BE USED FOR ALL POSTED SPEEDS.
2. ACCEPTED SYSTEMS, ON THE DEPARTMENT'S APPROVED PRODUCT LIST, SHALL BE INSTALLED ACCORDING TO MANUFACTURERS' INSTALLATION INSTRUCTIONS.
3. A REFLECTORIZED OBJECT MARKER SHALL BE INSTALLED. ADHESIVE BACKED REFLECTIVE SHEETING MAY BE APPLIED DIRECTLY TO GUARDRAIL END TREATMENT IMPACT HEAD AS PER THE MANUFACTURER'S RECOMMENDATION. DIRECT APPLIED SHEETING SHALL PROVIDE A SMOOTH SURFACE AND HAVE NO WRINKLES, AIR BUBBLES, CUTS OR TEARS. REFLECTIVE MATERIAL SHALL BE TYPE VIII OR BETTER WITH YELLOW BACK GROUND AND BLACK CHEVRON STRIPES. STRIPES SHALL BE ORIENTED WITH THEIR TOPS AWAY FROM TRAFFIC AND ANGLED DOWN AT 45° TOWARDS TRAFFIC.
4. THESE END TREATMENTS DO NOT REQUIRE AN OFFSET AT THE END. END TREATMENTS SHALL BE INSTALLED ENSURING THAT THE END PIECE IS 2' OFF THE SHOULDER. A MAXIMUM FLARE OF 25:1 OR FLATTER OVER THE LENGTH OF THE TREATMENT IS ALLOWED.
5. END TREATMENTS SHALL BE OF THE LENGTH AND TEST LEVEL SPECIFIED IN THESE DRAWINGS AND AS SPECIFIED BY THE THE MANUFACTURER FOR THE INTENDED END TREATMENT TYPE AND TEST LEVEL. ONLY END TREATMENTS CURRENTLY ON THE NMDOT APPROVED PRODUCT LIST WILL BE ACCEPTED FOR INSTALLATION. FOR SPECIFIC END TREATMENT DETAILS, SEE MANUFACTURERS' DRAWINGS.
6. SHOP DRAWINGS AND MANUFACTURERS' INSTALLATION INSTRUCTIONS SHALL BE SUBMITTED BY THE CONTRACTOR TO THE PROJECT MANAGER A MINIMUM OF FIVE DAYS PRIOR TO INSTALLATION TO ENSURE THAT THE COMPONENTS DELIVERED AND INSTALLED BY THE CONTRACTOR ARE IN ACCORDANCE WITH THE MANUFACTURERS' DRAWINGS, SPECIFICATIONS, AND INSTALLATION INSTRUCTIONS.
7. WARP ALL GRADE TRANSITIONS TO CREATE SMOOTH SURFACE CONTOURS.

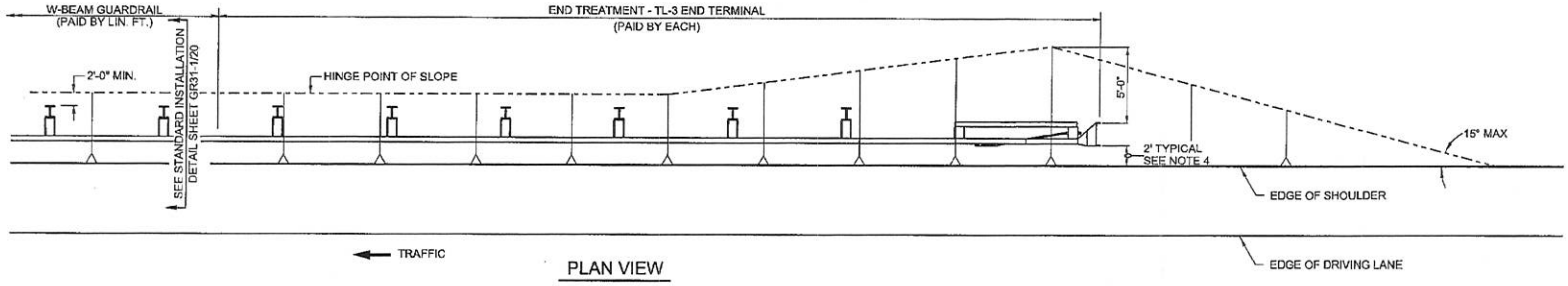

PLAN VIEW

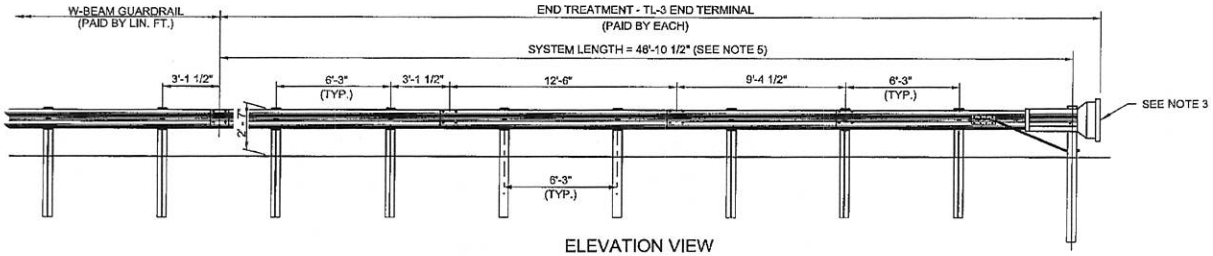

ELEVATION VIEW

NO.	DATE	REV. BY	DESCRIPTION

REVISIONS (OR CHANGE NOTICES)

NEW MEXICO
DEPARTMENT OF TRANSPORTATION
STANDARD DRAWING

END TREATMENT
TL-3 END TERMINAL

APPROVED _____ DESIGN ENGINEER _____ DATE

DRAWING SCALE = NOT TO SCALE

606-GR31-7/20

edd_trf\preliminary drawings & docs\roadside\Working Folder~GR Type 31 Standards\GR31-7 Beam Guardrail End Terminal Type 1.dgn

SUMMARY
FILENAME

NOTES:

1. END TREATMENT SHOWN IS A GENERAL DEPICTION OF A NOMINAL 37'-6" NMDOT ACCEPTED END TERMINAL THAT IS FHWA ACCEPTED AS CRASHWORTHY AT TEST LEVEL 2 (TL-2) AND MAY BE USED IN APPLICATIONS WITH SPEEDS OF 40 MPH OR LESS.
2. ACCEPTED END TREATMENT, ON THE DEPARTMENT'S APPROVED PRODUCT LIST, SHALL BE INSTALLED ACCORDING TO MANUFACTURERS' INSTALLATION INSTRUCTIONS.
3. A REFLECTORIZED OBJECT MARKER SHALL BE INSTALLED. ADHESIVE BACKED REFLECTIVE SHEETING MAY BE APPLIED DIRECTLY TO GUARDRAIL END TREATMENT IMPACT HEAD AS PER THE MANUFACTURERS RECOMMENDATION. DIRECT APPLIED SHEETING SHALL PROVIDE A SMOOTH SURFACE AND HAVE NO WRINKLES, AIR BUBBLES, CUTS OR TEARS. REFLECTIVE MATERIAL SHALL BE TYPE VIII OR BETTER WITH YELLOW BACK GROUND AND BLACK CHEVRON STRIPES. STRIPES SHALL BE ORIENTED WITH THEIR TOPS AWAY FROM TRAFFIC AND ANGLED DOWN AT 45° TOWARDS TRAFFIC.
4. THESE END TREATMENTS DO NOT REQUIRE AN OFFSET AT THE END. END TREATMENTS SHALL BE INSTALLED ENSURING THE END PIECE IS 2' OFF THE SHOULDER. A MAXIMUM FLARE OF 25:1 OR FLATTER OVER THE LENGTH OF THE TREATMENT IS ALLOWED.
5. END TREATMENTS SHALL BE OF THE LENGTH AND TEST LEVEL SPECIFIED IN THESE DRAWINGS AND AS SPECIFIED BY THE MANUFACTURER FOR THE INTENDED END TREATMENT TYPE TEST LEVEL. ONLY END TREATMENTS CURRENTLY ON THE NMDOT APPROVED PRODUCTS LIST WILL BE ACCEPTED FOR INSTALLATION. FOR SPECIFIC END TREATMENT DETAILS, SEE MANUFACTURERS' DRAWINGS.
6. SHOP DRAWINGS AND MANUFACTURERS' INSTALLATION INSTRUCTIONS SHALL BE SUBMITTED BY THE CONTRACTOR TO THE PROJECT MANAGER A MINIMUM OF FIVE DAYS PRIOR TO INSTALLATION TO ENSURE THAT THE COMPONENTS DELIVERED AND INSTALLED BY THE CONTRACTOR ARE IN ACCORDANCE WITH THE MANUFACTURER'S DRAWINGS, SPECIFICATIONS, AND INSTALLATION INSTRUCTIONS.
7. WARP ALL GRADE TRANSITIONS TO CREATE SMOOTH SURFACE CONTOURS.

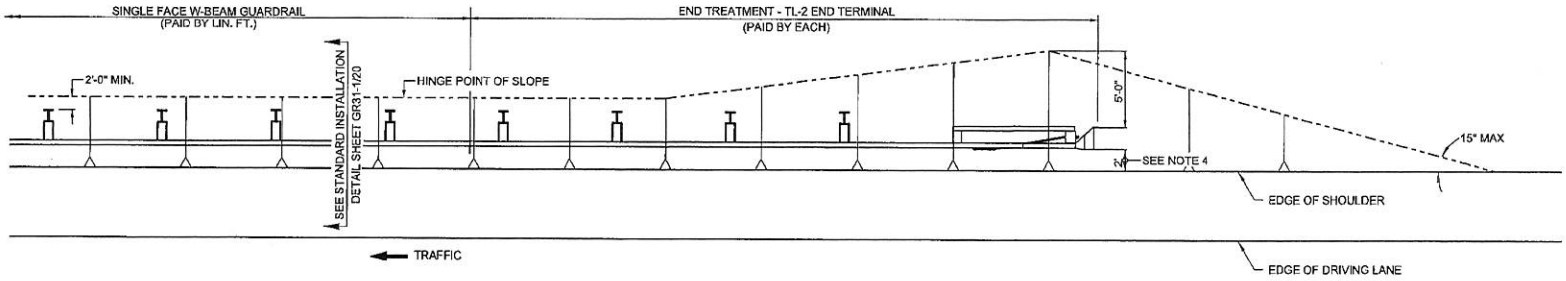

PLAN VIEW

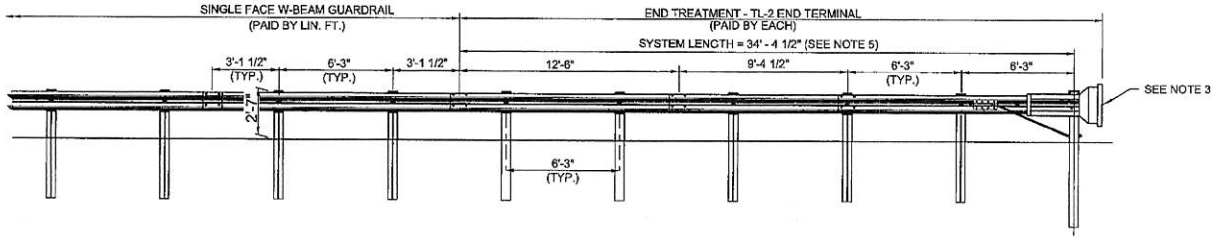

ELEVATION VIEW

AFSHIN JAN
NEW MEXICO
16228
5-6-14
LICENSED PROFESSIONAL ENGINEER

NO.	DATE	REV. BY	DESCRIPTION

REVISIONS (OR CHANGE NOTICES)

NEW MEXICO
DEPARTMENT OF TRANSPORTATION
STANDARD DRAWING

END TREATMENT
TL-2 END TERMINAL

APPROVED _____ DESIGN ENGINEER _____ DATE

DRAWING SCALE = NOT TO SCALE

606-GR31-8/20

edd_trf\preliminary drawings & docs\roadside\Working Folder~GR Type 31 Standards\GR31-8 Beam Guardrail End Terminal Type 2.dgn

SUMMARY
FILENAME

NOTES:

1. FOR USE ON THE DOWNSTREAM END OF GUARDRAIL RUNS, WHEN A CRASHWORTHY TL-3 OR TL-2 END TERMINAL IS NOT REQUIRED.
2. ACCEPTED SYSTEMS ON THE DEPARTMENT'S APPROVED PRODUCTS LIST SHALL BE INSTALLED ACCORDING TO MANUFACTURERS' INSTALLATION INSTRUCTIONS.
3. SHOP DRAWINGS AND MANUFACTURER'S INSTALLATION INSTRUCTIONS SHALL BE SUBMITTED BY THE CONTRACTOR TO THE PROJECT ENGINEER A MINIMUM OF FIVE DAYS PRIOR TO INSTALLATION.
4. FOR ADDITIONAL DETAILS NOT SHOWN, SEE SHEET 606-GR31-11/20 AND SHEET 606-GR31-12/20.

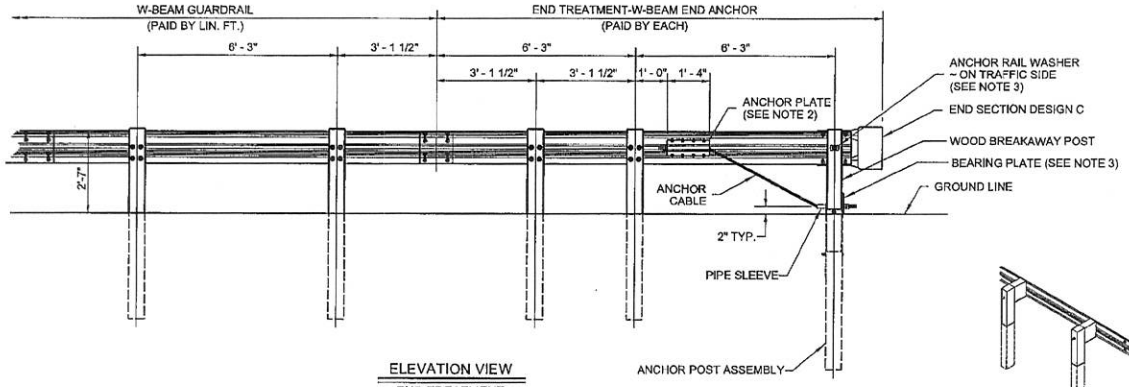

ELEVATION VIEW

END TREATMENT
W-BEAM END ANCHOR
PAID AS EACH

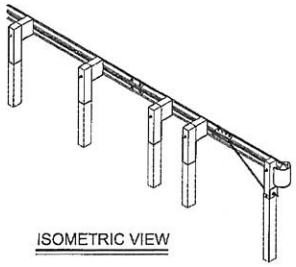

ISOMETRIC VIEW

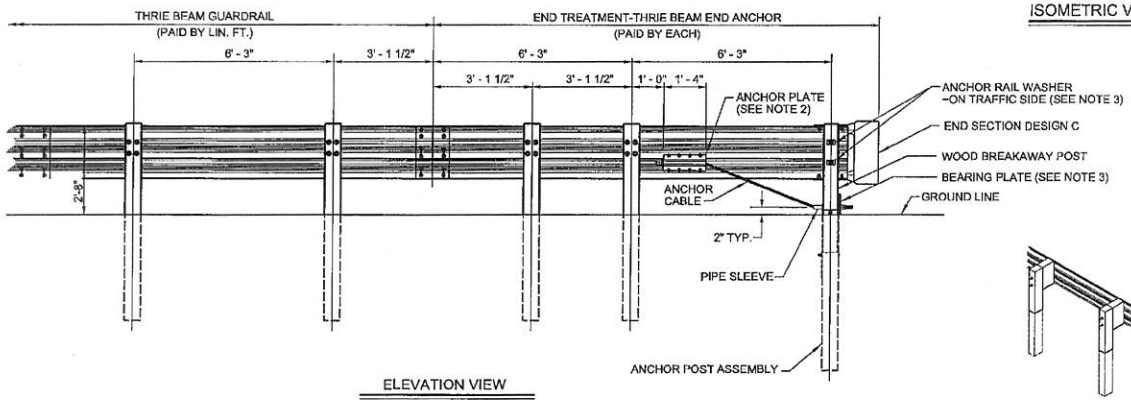

ELEVATION VIEW

END TREATMENT
THRIE BEAM END ANCHOR
PAID AS EACH

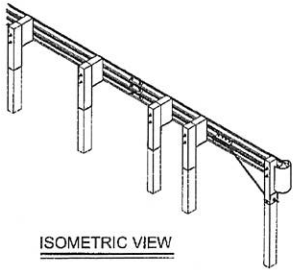

ISOMETRIC VIEW

AFSHIN JAH
NEW MEXICO
16226
5-6-14
LICENSED PROFESSIONAL ENGINEER

DRAWING SCALE = NOT TO SCALE

NO.	DATE	REV. BY	DESCRIPTION

REVISIONS (OR CHANGE NOTICES)

NEW MEXICO
DEPARTMENT OF TRANSPORTATION
STANDARD DRAWING

END TREATMENT
W-BEAM END ANCHOR
& THRIE BEAM END ANCHOR

APPROVED _____ DESIGN ENGINEER _____ DATE

606-GR31-9/20

edd_trf\preliminary drawings & docs\roadside\Working Folder~GR Type 31 Standards\GR31-9 Beam Guardrail end Anchor End Terminal Types 3 & 4.dgn

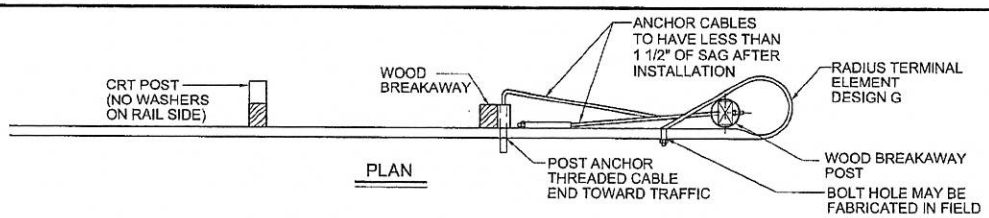

PLAN

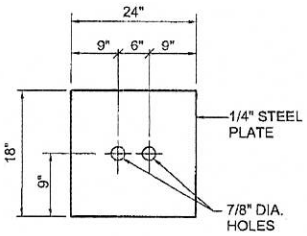

SOIL PLATE DETAIL

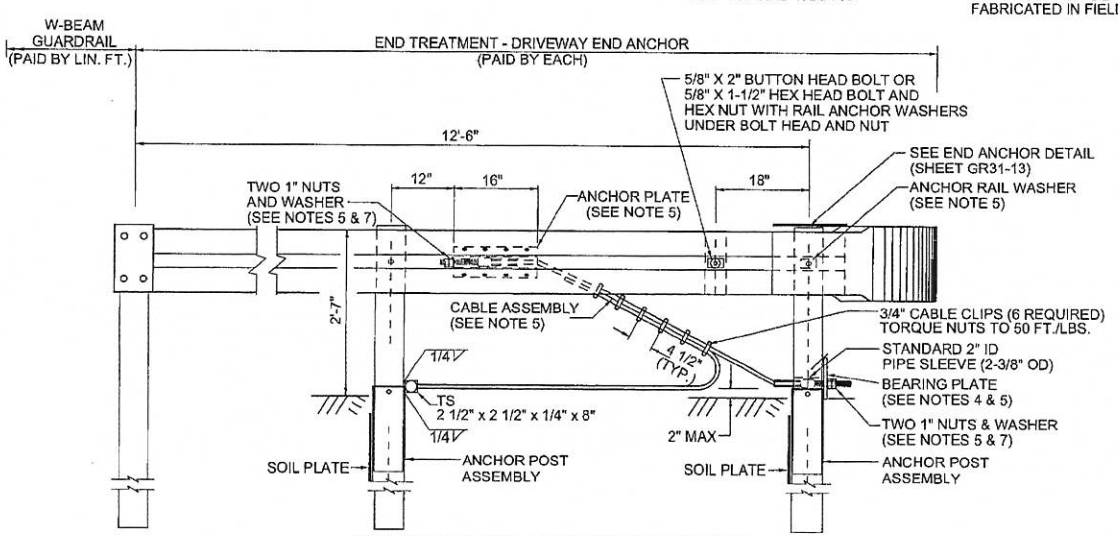

END TREATMENT - DRIVEWAY END ANCHOR

NOTES:

1. END TREATMENT SHOWN IS A GENERAL DEPICTION OF A NMDOT ACCEPTED END ANCHOR THAT IS FHWA SPECIFIED (SEE FHWA TECHNICAL ADVISORY T5040-320 ON THE FHWA WEBSITE FOR DETAILS). DRIVEWAY END ANCHORS SHOULD ONLY BE USED WHEN THERE IS INSUFFICENT SPACE TO PROPERLY INSTALL A TL-2 END TERMINAL (SHEET 606-GR31-8/20) OR A STANDARD END ANCHOR (SHEET 606-GR31-9/20) ON THE MINOR APPROACH OR DRIVEWAY. THIS END TREATMENT SHALL NOT BE USED ON THE MAINLINE.
2. FOR CURVED GUARDRAIL DETAILS SEE POST ANCHOR DETAILS ON SHEET 606-G31-14/20.
3. FOR CONTROLLED RELEASE TERMINAL (CRT) POST DETAIL, SEE SHEET 606-G31-14/20.
4. TACK WELD OR TOENAIL BEARING PLATE WITH 10D NAIL AT CORNERS TO PREVENT TURNING. BEND THE NAIL OVER THE BEARING PLATE.
5. FOR DETAILS NOT SHOWN SEE END ANCHORAGE DETAIL ON SHEET 606-GR31-13/20.
6. THE WOOD BREAKAWAY POSTS SHALL BE S4S TIMBER WITH A STRESS GRADE MARKED OR CERTIFIED BY A RECOGNIZED ASSOCIATION OR AGENCY WHICH IS CERTIFIED BY THE BOARD OF REVIEW. AMERICAN LUMBER STANDARDS COMMITTEE TO GRADE THE SPECIES. WOOD PRESERVATIVES SHALL CONFORM TO THE REQUIREMENTS OF AASHTO DESIGNATION M133.
7. OUTSIDE NUT WILL BE TORQUED AGAINST INSIDE NUT A MINIMUM OF 100 FT./LBS.

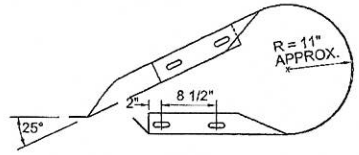

PLAN

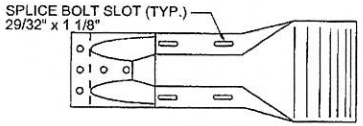

ELEVATION
RADIUS TERMINAL ELEMENT DESIGN G

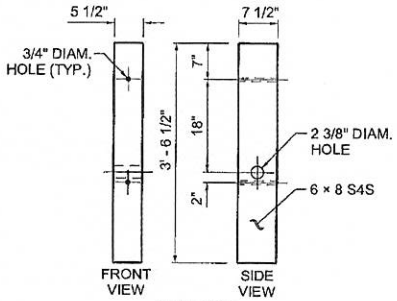

W-BEAM
WOOD BREAKAWAY POST
SEE NOTE 5

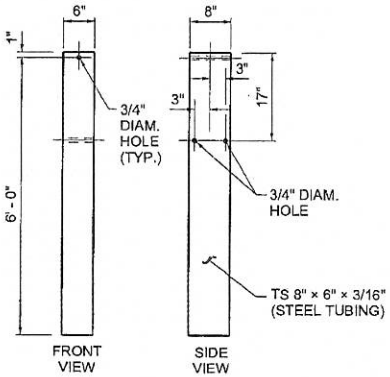

FOUNDATION TUBE

NO.	DATE	REV. BY	DESCRIPTION

REVISIONS (OR CHANGE NOTICES)

NEW MEXICO
DEPARTMENT OF TRANSPORTATION
STANDARD DRAWING

END TREATMENT
DRIVEWAY END ANCHOR

APPROVED _____ DESIGN ENGINEER _____ DATE

DRAWING SCALE = NOT TO SCALE

606-GR31-10/20

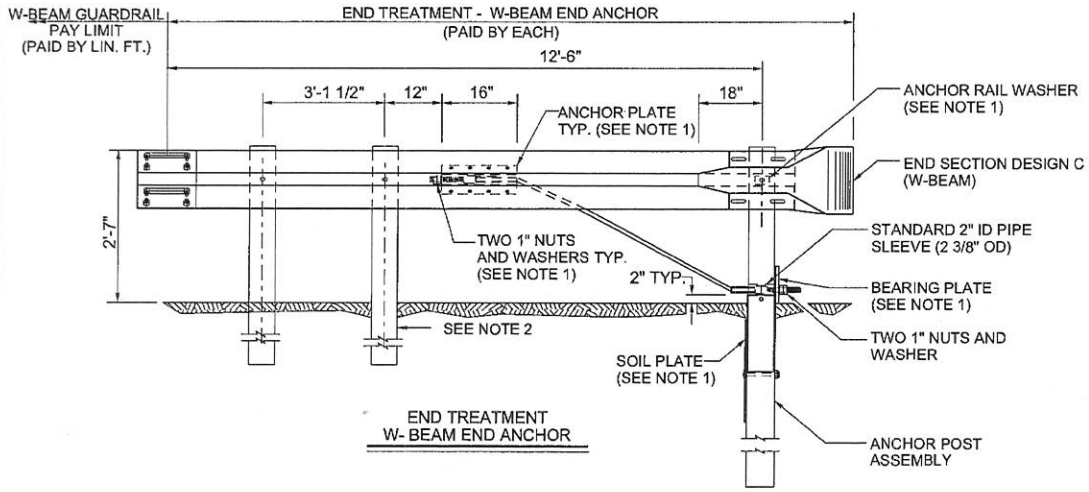

END TREATMENT
W- BEAM END ANCHOR

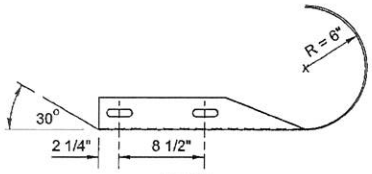

PLAN
DESIGN C

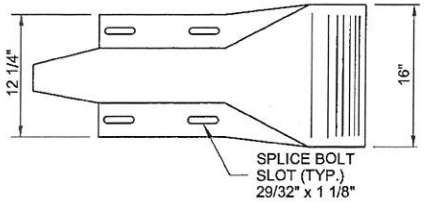

ELEVATION
DESIGN C

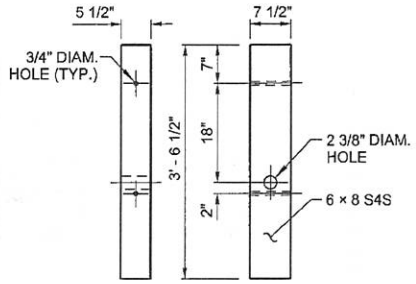

W-BEAM
WOOD BREAKAWAY POST

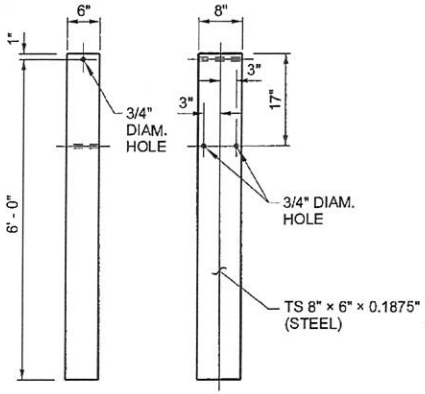

FOUNDATION TUBE

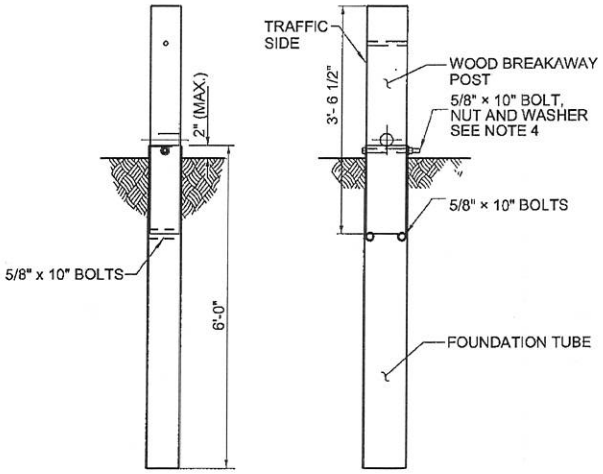

FRONT VIEW SIDE VIEW

ANCHOR POST ASSEMBLY

NOTES:

1. FOR DETAILS NOT SHOWN, SEE SHEET 606-GR31-13/20.
2. POST AND BLOCK SHALL MATCH BEAM GUARDRAIL POSTS.
3. THE WOOD, BREAKAWAY POSTS SHALL BE S4S TIMBER WITH A STRESS GRADE MARKED OR CERTIFIED BY A RECOGNIZED ASSOCIATION OR AGENCY WHICH IS CERTIFIED BY THE BOARD OF REVIEW. AMERICAN LUMBER STANDARDS COMMITTEE TO GRADE THE SPECIES. WOOD PRESERVATIVES SHALL COMPLY TO THE REQUIREMENTS OF AASHTO DESIGNATION M133.
4. BOLT SHALL BE INSTALLED FROM THE EMBANKMENT SIDE.

NO.	DATE	REV. BY	DESCRIPTION

REVISIONS (OR CHANGE NOTICES)

NEW MEXICO
DEPARTMENT OF TRANSPORTATION
STANDARD DRAWING

END TREATMENT
W-BEAM END ANCHOR DETAILS

APPROVED _____ DESIGN ENGINEER _____ DATE

DRAWING SCALE = NOT TO SCALE

606-GR31-11/20

SUMMARY
FILENAME

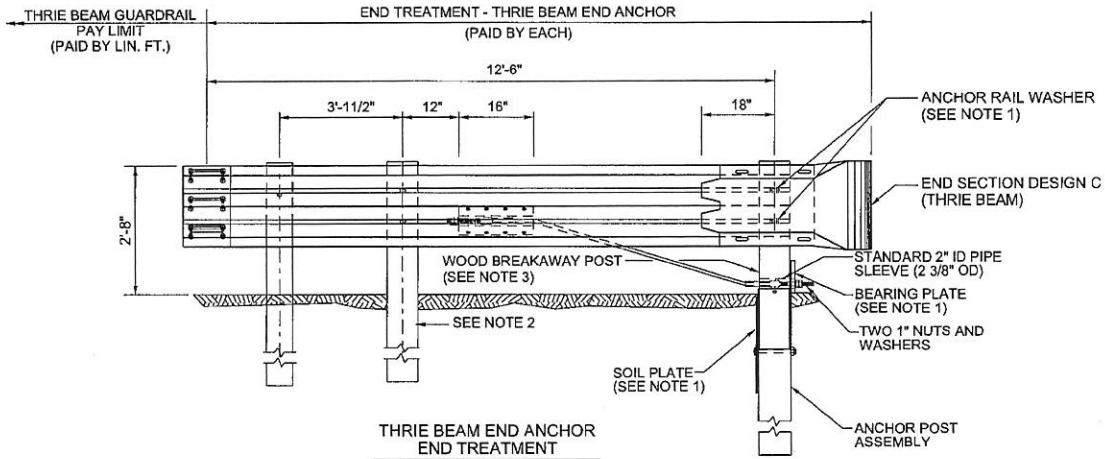

THRIE BEAM END ANCHOR
END TREATMENT

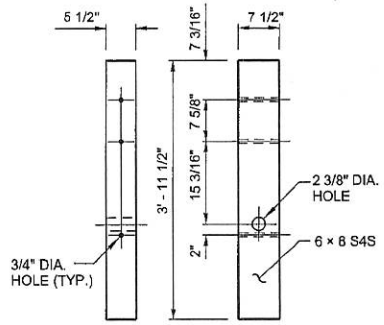

THRIE BEAM
WOOD BREAKAWAY POSTS
SEE NOTE 3

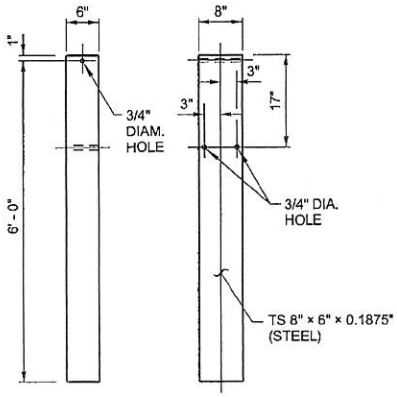

FOUNDATION TUBE

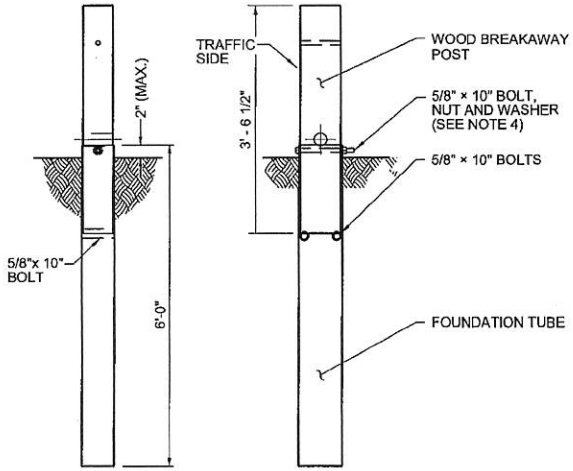

FRONT VIEW SIDE VIEW

ANCHOR POST ASSEMBLY

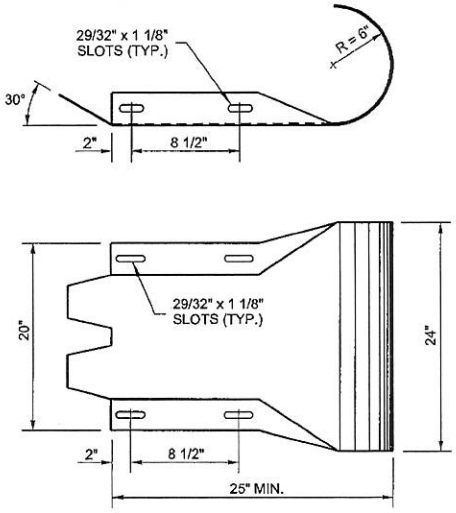

DESIGN C (THRIE BEAM)

NOTES:

1. FOR DETAILS NOT SHOWN, SEE SHEET 606-GR31-13/20.
2. POST AND BLOCK SHALL MATCH BEAM GUARDRAIL POSTS.
3. THE WOOD, BREAKAWAY POSTS SHALL BE S4S TIMBER WITH A STRESS GRADE MARKED OR CERTIFIED BY A RECOGNIZED ASSOCIATION OR AGENCY WHIICH IS CERTIFIED BY THE BOARD OF REVIEW. AMERICAN LUMBER STANDARDS COMMITTEE TO GRADE THE SPECIES. WOOD PRESERVATIVES SHALL COMPLY TO THE REQUIREMENTS OF AASHTO DESIGNATION M133.
4. BOLT SHALL BE INSTALLED FROM THE EMBANKMENT SIDE.

AFSHIN JAM
NEW MEXICO
16226
5-6-14
LICENSED PROFESSIONAL ENGINEER

NO.	DATE	REV. BY	DESCRIPTION

REVISIONS (OR CHANGE NOTICES)

NEW MEXICO
DEPARTMENT OF TRANSPORTATION
STANDARD DRAWING

END TREATMENT
THRIE BEAM END ANCHOR DETAILS

APPROVED _____ DESIGN ENGINEER _____ DATE

DRAWING SCALE = NOT TO SCALE

606-GR31-12/20

edd_trf\preliminary drawings & docs\roadside\Working Folder~GR Type 31 Standards\GR31-12 Type 4 Beam Guardrail Anchor Details.dgn

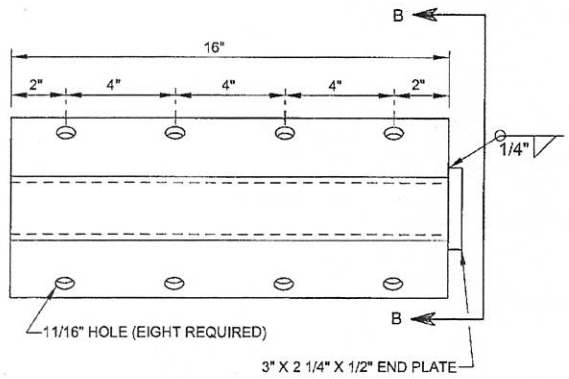

ELEVATION

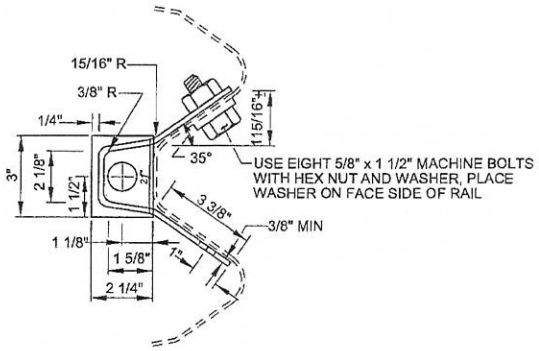

SECTION B-B

ANCHOR PLATE

SEE NOTE 1

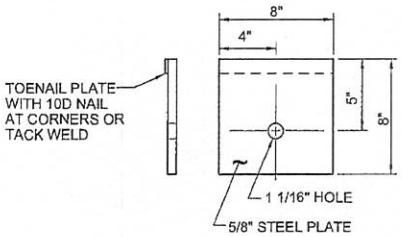

BEARING PLATE

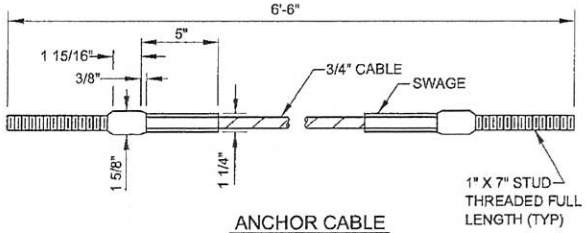

ANCHOR CABLE

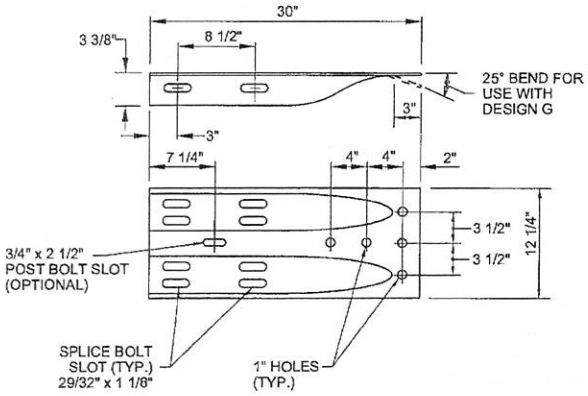

END SECTION
W-BEAM

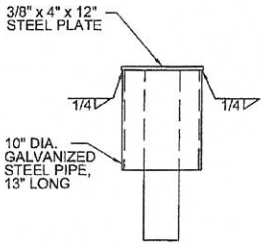

END ANCHOR DETAIL

(SEE SHEET 606-GR31-10/20)

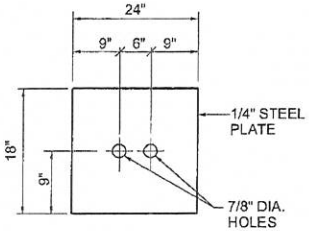

SOIL PLATE DETAIL

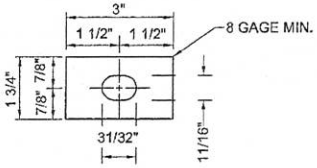

ANCHOR RAIL WASHER

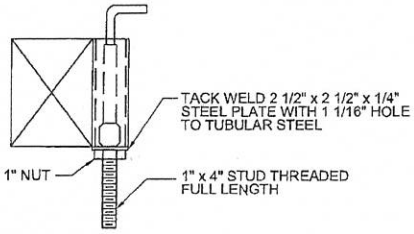

POST ANCHOR DETAIL

(SEE SHEET 606-GR31-10/20)

NO.	DATE	REV. BY	DESCRIPTION

REVISIONS (OR CHANGE NOTICES)

NEW MEXICO
DEPARTMENT OF TRANSPORTATION
STANDARD DRAWING

END TREATMENT
DRIVEWAY END ANCHOR DETAILS

APPROVED _____ DESIGN ENGINEER _____ DATE

DRAWING SCALE = NOT TO SCALE

606-GR31-13/20

SUMMARY
FILENAME

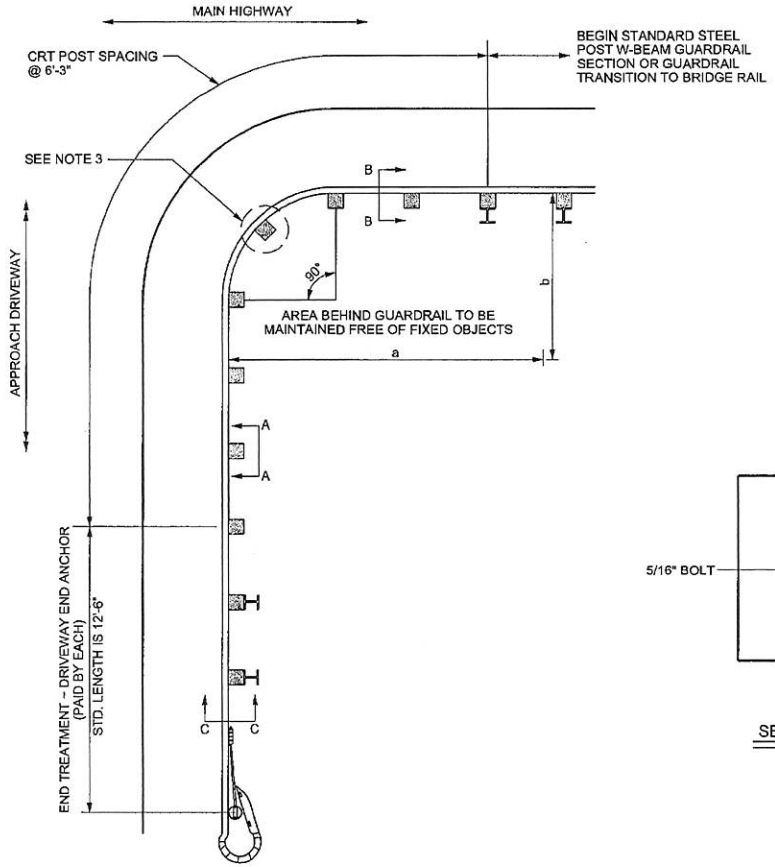

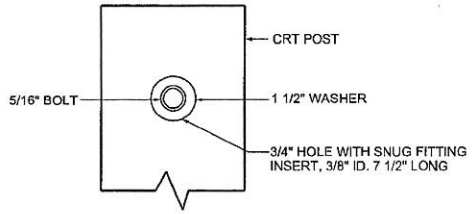

SECTION A-A

NOTES:

1. ALL MATERIALS AND WORKMANSHIP SHALL CONFORM TO THE NEW MEXICO DEPARTMENT OF TRANSPORTATION STANDARD SPECIFICATIONS FOR HIGHWAY AND BRIDGE CONSTRUCTION (CURRENT EDITION).
2. ALL HARDWARE SHALL MEET FHWA CRASHWORTHINESS REQUIREMENTS AS PER NCHRP 350 AND MASH GUIDELINES AND SHALL BE ON THE DEPARTMENT'S APPROVED PRODUCT LIST.
3. THE RAIL IS NOT BOLTED TO THE CRT POST AT THE CENTER OF THE NOSE FOR THE 8'-6" RADIUS INSTALLATION ONLY.
4. NO WASHERS ARE USED ON THE 5/8" BUTTON HEAD BOLTS CONNECTING THE RAIL TO THE CRT POSTS.
5. THE CURVED GUARDRAIL SECTION SHALL BE SHOP FABRICATED.
6. THE SLOPE IN FRONT OF THE CURVED GUARDRAIL SHOULD NOT EXCEED 15:1.
7. CURVED GUARDRAIL SHALL ONLY BE USED ON OPERATING SPEEDS OF 60 MPH OR LESS. 35' RADIUS CURVED GUARDRAIL SHOULD ONLY BE USED ON OPERATING SPEEDS OF 50 MPH OR LESS.
8. CURVED GUARDRAIL SHALL BE PAID AS SINGLE FACE W-BEAM GUARDRAIL.

RADIUS	NO. OF CRT POINTS	NOMINAL LENGTH OF BENT RAIL	REQUIRED AREA FREE OF FIXED OBJECTS
			a x b
8' - 6"	5	12'-6"	25' X 15'
17'	6	25'	30' X 15'
25'-6"	8	37'-6"	40' X 20'
35'	11	50'	50' X 20'

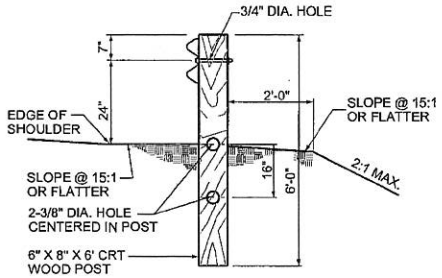

SECTION B-B

CONTROLLED RELEASING TERMINAL POST (CRT)

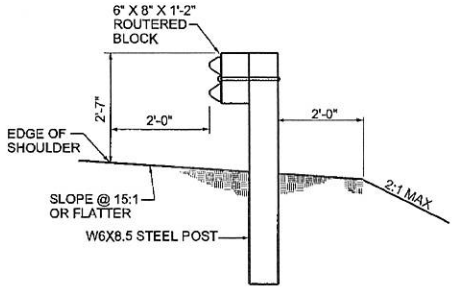

SECTION C-C

NO.	DATE	REV. BY	DESCRIPTION

REVISIONS (OR CHANGE NOTICES)

NEW MEXICO
DEPARTMENT OF TRANSPORTATION
STANDARD DRAWING

CURVED GUARDRAIL DETAILS

APPROVED _____ DESIGN ENGINEER _____ DATE

DRAWING SCALE = NOT TO SCALE

606-GR31-14/20

edd_trf\preliminary drawings & docs\roadside\Working Folder~GR Type 31 Standards\GR31-14_Curved Guardrail Details.dgn

SUMMARY
FILENAME

FLARE RATE TABLE	
RATE	POSTED SPEED (MPH)
16:1	75
15:1	70
14:1	60
12:1	55
11:1	50
10:1	45
9:1	40 OR LESS

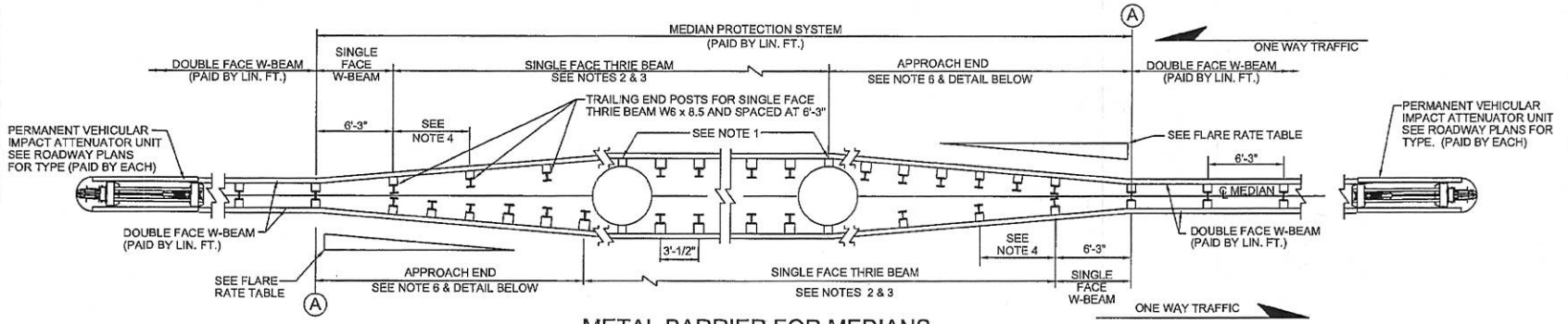

METAL BARRIER FOR MEDIANS

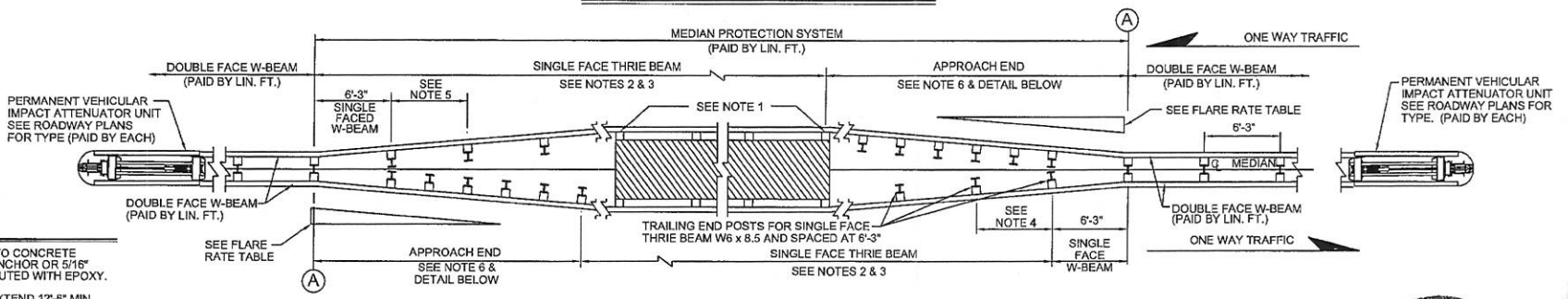

METAL BARRIER FOR MEDIANS

NOTES

1. ATTACH STANDARD OFFSET BLOCKS TO CONCRETE STRUCTURE WITH 5/16" EXPANSION ANCHOR OR 5/16" THREADED ROD IN A 1" X 8" HOLE GROUTED WITH EPOXY.
2. THE THRIE BEAM GUARDRAIL SHALL EXTEND 12'-6" MIN PAST THE STRUCTURE TO ALLOW INSTALLATION OF TRANSITION FOR THE OPPOSING TRAFFIC.
3. IF THE MINIMUM NUMBER OF 12'-6" THRIE BEAM SECTIONS REQUIRED TO SPAN THE STRUCTURE EXTENDS MORE THAN 6'-3" (BUT LESS THAN 12'-6") PAST THE STRUCTURE, THEN A 6'-3" SECTION OF NESTED THRIE BEAM SHOULD BE ADDED. OTHERWISE, INSTALL AN ADDITIONAL 12'-6" SECTION.
4. INDICATES THRIE BEAM GUARDRAIL REDUCER TRANSITION.
5. SOIL EMBANKMENT MATERIAL SHALL BE COMPACTED TO 95% OF MAXIMUM PROCTOR DENSITY, UNLESS OTHERWISE SPECIFIED IN THE PLANS. THE COST OF THE EMBANKMENT MATERIAL, FILL MATERIAL AROUND THE POST, GROUT MATERIAL FOR LEAVE OUTS AND THE PLACEMENT THEREOF SHALL BE INCLUDED IN THE UNIT BID PRICE FOR THE METAL BARRIER.
6. THIS TRANSITION SHALL END AT A W6 X 15 POST. PLACE NESTED THRIE BEAM WITH W6 X 15 POST AT 3'-1 1/2" MAX. SPACING BETWEEN THE END OF THE TRANSITION AND THE STRUCTURE.
7. SEE GUIDE FOR SELECTING , LOCATING AND DESIGNING TRAFFIC BARRIERS (CURRENT EDITION) TO DETERMINE PIER LOCATIONS THAT WARRANT BARRIERS.
8. METAL BARRIER TRANSITION SECTION AND NESTED THRIE BEAM SECTION SHALL BE INCLUDED IN THE LINEAR FEET OF THE PROTECTION SYSTEM.
9. FOR DETAILS OF W-BEAM GUARDRAIL SEE SHEET 606-GR31-1/20. FOR DETAILS OF THRIE BEAM GUARDRAIL SEE SHEET 606-GR31-2/20.
10. USE APPROPRIATE VEHICULAR IMPACT ATTENUATORS BASED ON THE ROADWAY POSTED SPEED AND MEDIAN WIDTH. FABRICATE AND INSTALL IN ACCORDANCE WITH MANUFACTURER'S SPECIFICATIONS.
11. PROTECTION SYSTEM SHALL BE MEASURED AND PAID BY LINEAR FEET AS MEASURED ALONG THE CENTERLINE.

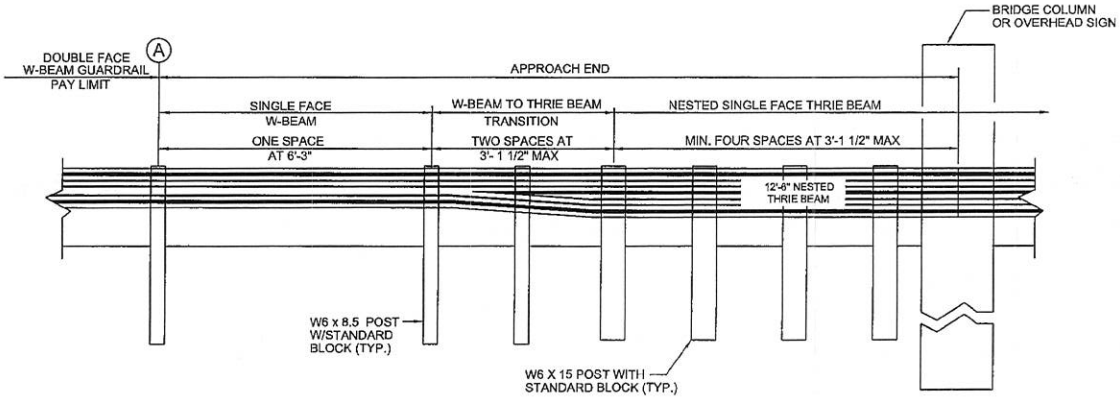

APPROACH END DETAIL

AFSHIN JIAN
NEW MEXICO
16226
5-6-14
LICENSED PROFESSIONAL ENGINEER

NO.	DATE	REV. BY	DESCRIPTION

REVISIONS (OR CHANGE NOTICES)

NEW MEXICO
DEPARTMENT OF TRANSPORTATION
STANDARD DRAWING

MEDIAN PROTECTION SYSTEM

APPROVED _____ DESIGN ENGINEER _____ DATE

606-GR31-15/20

edd_trf\preliminary drawings & docs\roadside\Working Folder~GR Type 31 Standards\GR31-15 Median PierOverpass Protection w-Guardrail.dgn

SUMMARY
FILENAME

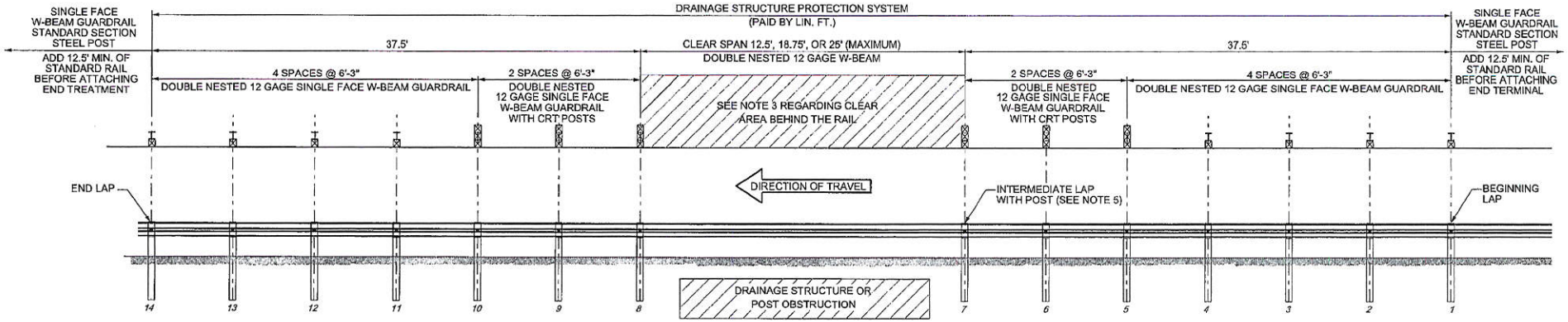

DRAINAGE STRUCTURE PROTECTION SYSTEM
(PAID BY LIN. FT.)

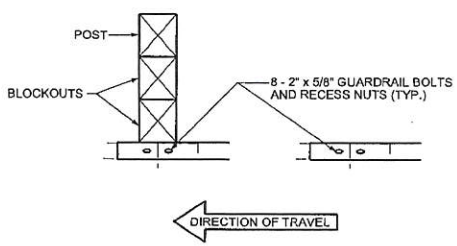

LAP SPLICES
SEE NOTE 4

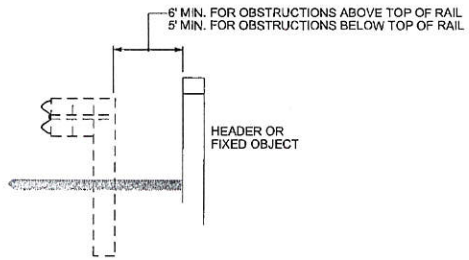

DYNAMIC DEFLECTION IN CLEAR SPAN AREA
SEE NOTE 3

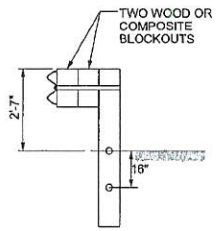

CRT WOOD POSTS
SEE NOTE 2

NOTES:

1. POSTS 1-4 AND 11-14 STANDARD STEEL POSTS WITH BLOCKOUTS. (SEE SHEET 606-GR31-1/20).
2. POSTS 5-10 ARE CRT WOOD POSTS WITH TWO WOOD OR COMPOSITE BLOCKOUTS. ONLY CRT POSTS SHALL BE WOOD.
3. CLEAR AREA BEHIND BACK OF RAIL SHALL BE:
   5 FEET MINIMUM FOR OBSTRUCTIONS LESS THAN OR EQUAL TO THE HEIGHT OF THE TOP OF RAIL.
   6 FEET MINIMUM FOR OBSTRUCTIONS TALLER THAN THE TOP OF RAIL.
4. LAP SPLICES IN THE DIRECTION OF ADJACENT TRAFFIC.
5. 25'-0" RAIL LENGTHS MAY BE USED TO ELIMINATE THE INTERMEDIATE LAP WITHOUT A POST. DO NOT PLACE A 25' RAIL WITHOUT A POST UNLESS NEEDED DUE TO THE LENGTH OF GAP.
6. DESIGN MUST MEET NCHRP 350 AND MASH TEST LEVEL 3 FHWA ACCEPTANCE.

NO.	DATE	REV. BY	DESCRIPTION

REVISIONS (OR CHANGE NOTICES)

NEW MEXICO
DEPARTMENT OF TRANSPORTATION
STANDARD DRAWING

DRAINAGE STRUCTURE PROTECTION SYSTEM

APPROVED _____ DESIGN ENGINEER _____ DATE

DRAWING SCALE = NOT TO SCALE

606-GR31-16/20

edd_trf\preliminary drawings & docs\roadside\Working Folder~GR Type 31 Standards\GR31-16 Long Span Double Nested Guardrail Details.dgn

SUMMARY
FILENAME

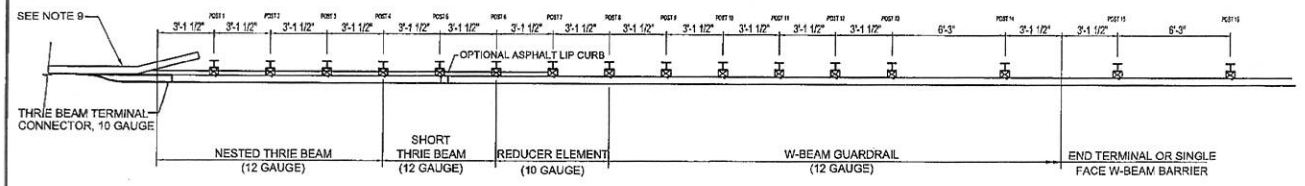

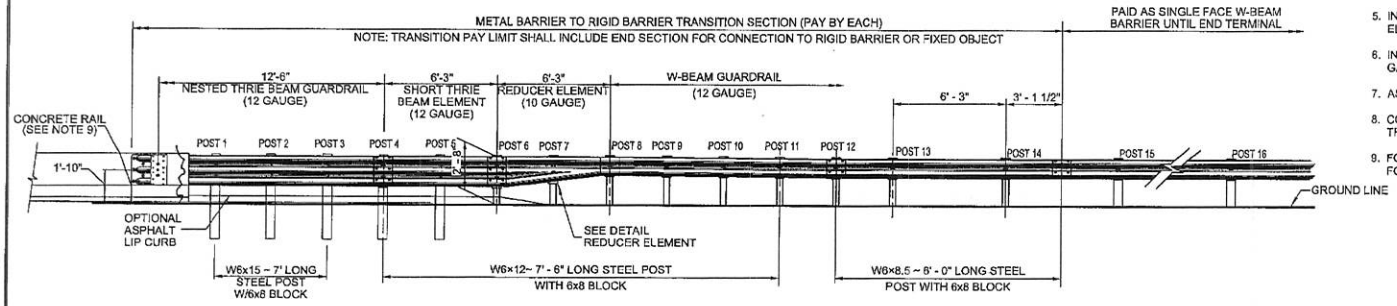

ELEVATION VIEW

NOTES:

1. ALL HARDWARE SHALL MEET FHWA CRASHWORTHINESS REQUIREMENTS AS PER NCHRP 350 AND MASH GUIDELINES AND SHALL BE ON THE DEPARTMENTS APPROVED PRODUCT LIST.
2. A MINIMUM OF FIVE 7/8" H.T.S. BOLTS ARE REQUIRED FOR THE ATTACHMENT OF THE THRIE BEAM TERMINAL CONNECTOR TO THE CONCRETE BARRIER WITH THIN SLAB FERRULE INSERTS OR RESIN BONDED ANCHORS. LENGTH TO BE AS NEEDED FOR PROPER ATTACHMENT AS DETERMINED IN THE FIELD BY THE PROJECT MANAGER. HOLES FOR BOLTS SHALL BE 1" DIA. AND SHALL BE EITHER FORMED OR CORE DRILLED IN A MANNER THAT DOES NOT DISTURB CONCRETE BARRIER STEEL REINFORCEMENT.
3. FURNISHING AND PLACING OF BOLTS, WASHERS, AND BEARING PLATE SHALL BE CONSIDERED INCIDENTAL TO THE COST OF METAL BARRIER.
4. INSTALL THRIE BEAM TERMINAL CONNECTOR BETWEEN NESTED GUARDRAIL ELEMENTS ON THE APPROACH SECTION.
5. INSTALL THRIE BEAM TERMINAL CONNECTOR OUTSIDE OF THE NESTED GUARDRAIL ELEMENTS ON THE APPROACH SECTION.
6. IN CASES WHERE END SECTION IS PLACED ON THE OUTSIDE OF THE GUARDRAIL, INSTALL A GALVANIZED 1" ID, 2" OD, 0.134" THICK FLAT WASHER UNDER SPLICE BOLT HEADS.
7. ASPHALT LIP CURB, IF SPECIFIED, SHALL BE CONSIDERED INCIDENTAL TO THE TRANSITION.
8. CONSTRUCTION OF LEAVEOUTS AND MOW STRIP SHALL BE CONSIDERED INCIDENTAL TO THE TRANSITION.
9. FOR 32" BRIDGE BARRIER CONNECTION, REFER TO STANDARD DRAWING 514-01-4/6 FOR DETAILS. FOR 42" BRIDGE BARRIER CONNECTION, REFER TO STANDARD DRAWING 514-03-4/6 FOR DETAILS.

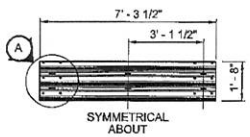

SHORT THRIE BEAM ELEMENT

LEFT
(MIRROR OF RIGHT)

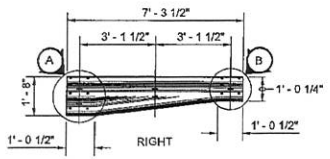

REDUCER ELEMENT
(REDUCER ELEMENT TO BE PAID AS LIN. FT. OF THRIE BEAM)

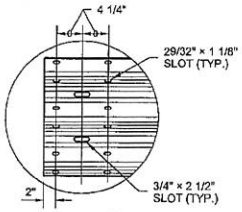

DETAIL (A)

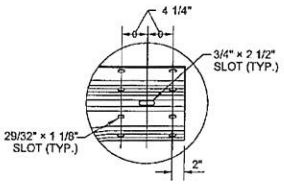

DETAIL (B)

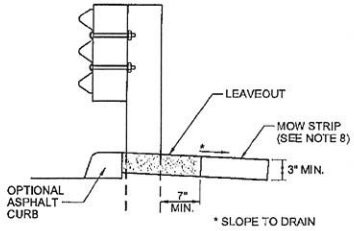

CURB OPTION (A)
THIS OPTION WILL INCREASE THE POST EMBEDMENT THROUGHOUT THE SYSTEM

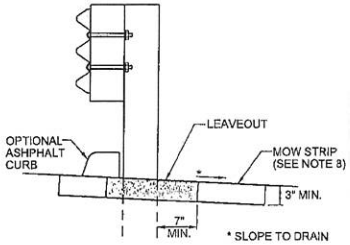

CURB OPTION (B)
CURB SHOWN ON TOP OF MOW STRIP

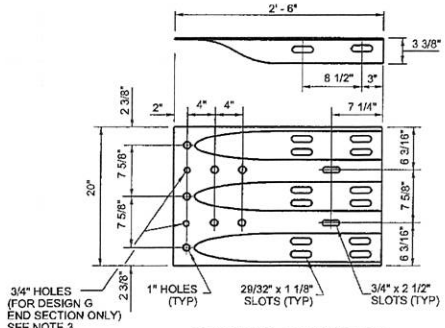

TERMINAL CONNECTOR THRIE BEAM

NO.	DATE	REV. BY	DESCRIPTION

REVISIONS (OR CHANGE NOTICES)

NEW MEXICO
DEPARTMENT OF TRANSPORTATION
STANDARD DRAWING

TRANSITION - METAL BARRIER
TO RIGID BARRIER

APPROVED _____ DESIGN ENGINEER — 11/05/13 DATE

DRAWING SCALE = NOT TO SCALE

606-GR31-17/20

edd_trf\preliminary drawings & docs\roadside\Working Folder~GR Type 31 Standards\ GR31-17 Beam Guardrail Transition Section.dgn

SUMMARY
FILENAME

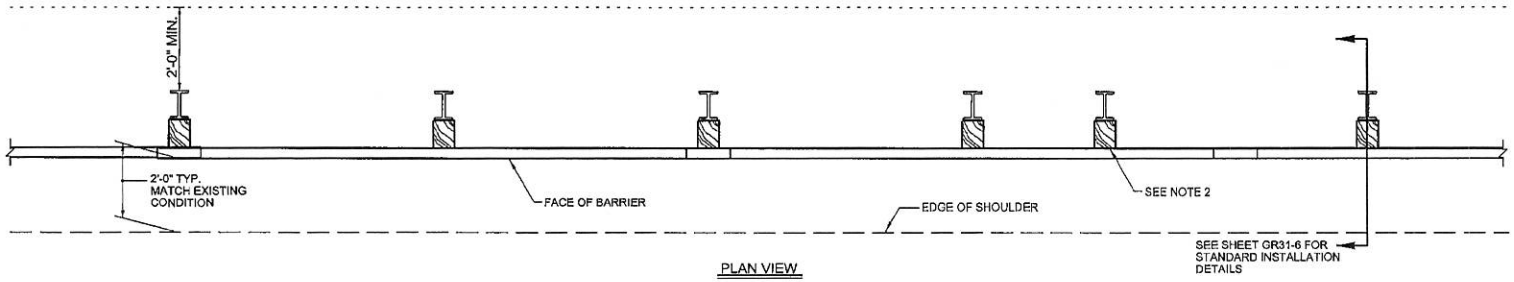

PLAN VIEW

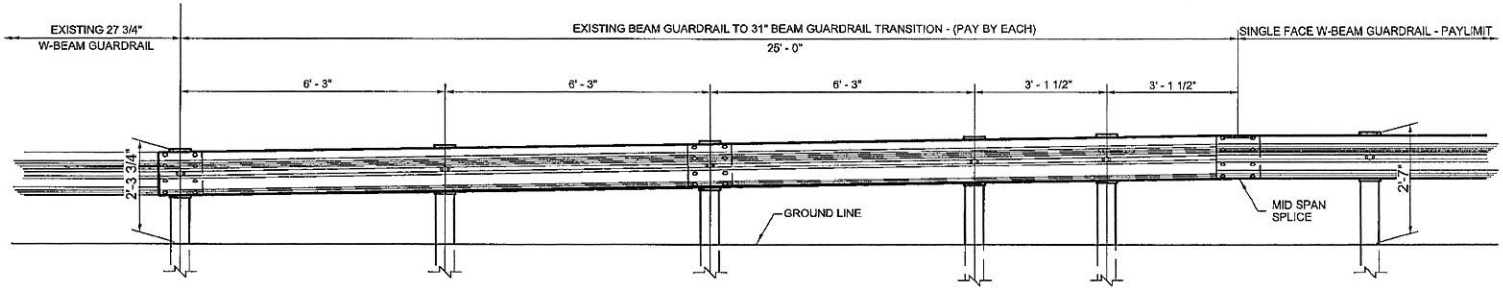

ELEVATION VIEW ~ PROFILE TAPER

NOTES:

1. REFER TO SHEET 606-GR31-1/20 AND 606-GR31-2/20 FOR COMPONENT DETAILS FOR SINGLE FACE W-BEAM GUARDRAIL NOT SHOWN ON THIS PLAN.
2. SPACER BLOCKS MAY CONSIST OF WOOD, PLASTIC, OR COMPOSITE MATERIAL ON THE APPROVED PRODUCTS LIST.

AFSHIN JIAN
NEW MEXICO
16226
5-6-14
LICENSED PROFESSIONAL ENGINEER

DRAWING SCALE = NOT TO SCALE

NO.	DATE	REV. BY	DESCRIPTION

REVISIONS (OR CHANGE NOTICES)

NEW MEXICO
DEPARTMENT OF TRANSPORTATION
STANDARD DRAWING

EXISTING BEAM GUARDRAIL TO
31" BEAM GUARDRAIL
TRANSITION

APPROVED _____ DESIGN ENGINEER _____ DATE

606-GR31-18/20

edd_trf\preliminary drawings & docs\roadside\Working Folder~GR Type 31 Standards\ GR31-18 Beam Guardrail to 31 Beam Guardrail Transition.dgn

NOTES:

1. IN CASES WHERE DESIGN F END SECTION IS LAPPED ON THE OUTSIDE OF THE GUARDRAIL, A GALVANIZED 1" ID, 2" OD, 0.134" THICK, NARROW TYPE A PLAIN WASHER OR AN ANCHOR RAIL WASHER WILL BE PLACED UNDER THE SPLICE BOLT HEADS.
2. ATTACH GUARDRAIL TO BRIDGE RAIL OR CONCRETE BARRIER WITH 7/8" DIAMETER BOLTS (FIVE MINIMUM) WITH THIN SLAB FERRULE INSERTS OR RESIN BONDED ANCHORS. SEE THE CONTRACT PLANS.

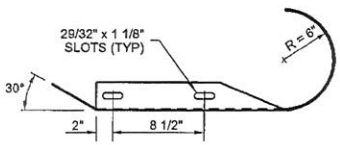

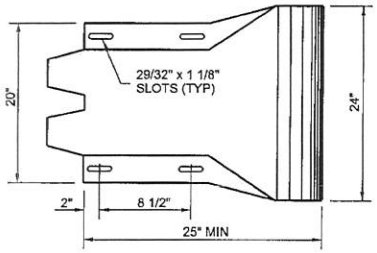

DESIGN C (THRIE BEAM)

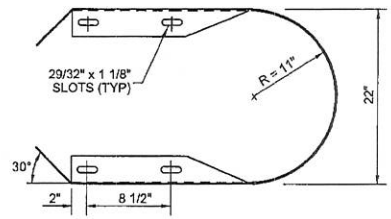

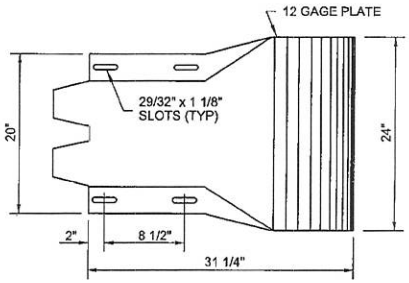

DESIGN D (THRIE BEAM)

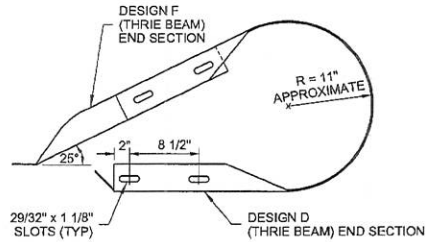

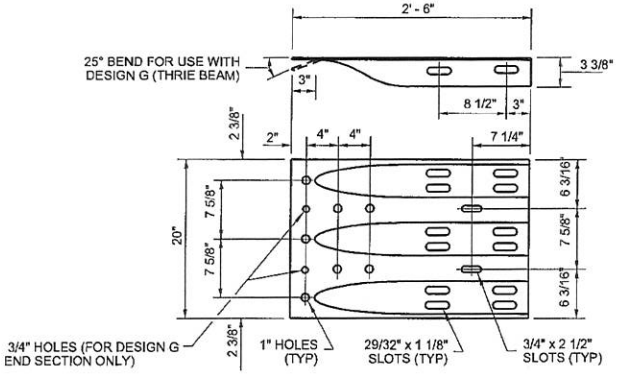

DESIGN F (THRIE BEAM)

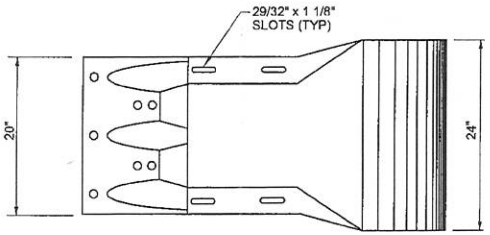

DESIGN G (THRIE BEAM)

NO.	DATE	REV. BY	DESCRIPTION

REVISIONS (OR CHANGE NOTICES)

NEW MEXICO
DEPARTMENT OF TRANSPORTATION
STANDARD DRAWING

THRIE BEAM GUARDRAIL
END SECTIONS

APPROVED _____ DESIGN ENGINEER _____ DATE

DRAWING SCALE = NOT TO SCALE

606-GR31-19/20

AFSHIN JIAN
NEW MEXICO
16226
5-6-14
LICENSED PROFESSIONAL ENGINEER

SUMMARY
FILENAME

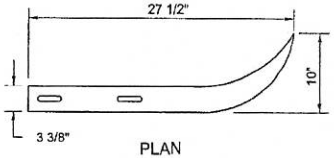

PLAN

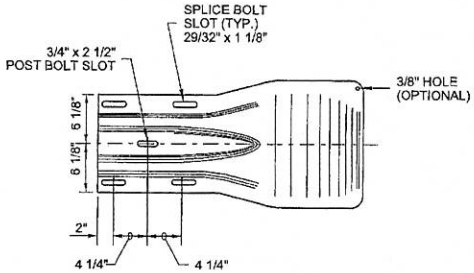

ELEVATION

DESIGN A

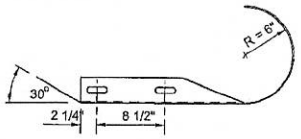

PLAN

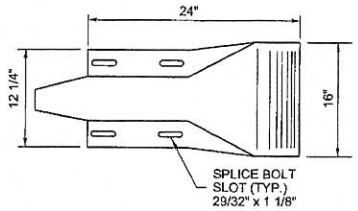

ELEVATION

DESIGN C

NOTES:

1. END SECTION DESIGN C SHALL BE USED EXCEPT WHERE NOTED ON THE PLANS OR CONTRACT.
2. ATTACH GUARDRAIL TO BRIDGE RAIL OR CONCRETE BARRIER WITH 7/8" DIAMETER BOLTS (FIVE MINIMUM) WITH THIN SLAB FERRULE INSERTS OR RESIN BONDED ANCHORS. SEE THE CONTRACT PLANS.
3. A SINGLE PIECE HAVING SIMILAR DIMENSIONAL SHAPE TO DESIGN G AND MATING WITH THE W-BEAM GUARDRAIL IS AN ACCEPTABLE ALTERNATE.
4. IN CASES WHERE DESIGN "F" END SECTION IS LAPPED ON THE OUTSIDE OF THE GUARDRAIL, A GALVANIZED 1" ID, 2" OD, 0.134" THICK, NARROW TYPE A PLAIN WASHER OR AN ANCHOR RAIL WASHER SHALL BE PLACED UNDER THE SPLICE BOLT HEADS.

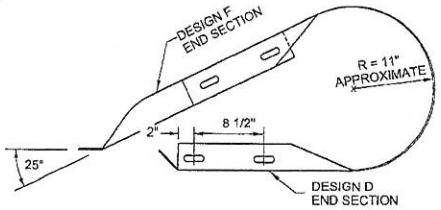

PLAN

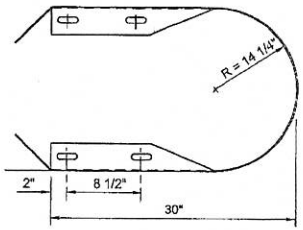

PLAN

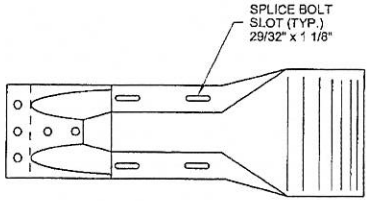

ELEVATION

DESIGN G

(SEE NOTE 3)

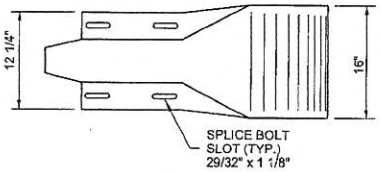

ELEVATION

DESIGN D

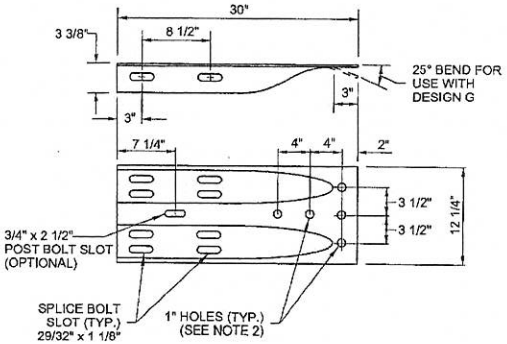

ELEVATION

DESIGN F

(SEE NOTE 4)

NO.	DATE	REV. BY	DESCRIPTION

REVISIONS (OR CHANGE NOTICES)

NEW MEXICO
DEPARTMENT OF TRANSPORTATION
STANDARD DRAWING

W-BEAM GUARDRAIL
END SECTIONS

APPROVED _____ DESIGN ENGINEER _____ DATE

DRAWING SCALE = NOT TO SCALE

606-GR31-20/20

L26

edd_tr\preliminary drawings & docs\roadside\Working Folder~GR Type 31 Standards\ GR-20 Beam Guardrail End Sections.dgn

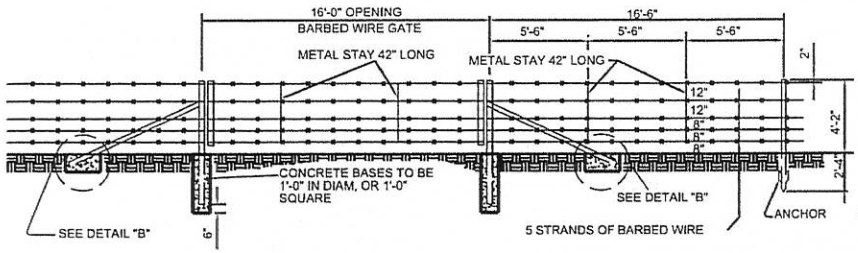

BARBED WIRE FENCE WITH METAL POSTS

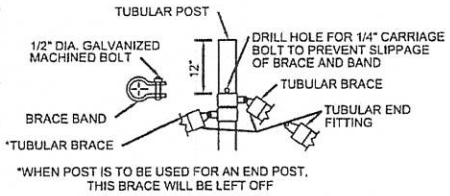

TUBULAR POST FITTINGS FOR END, CORNER OR LINE BRACE POSTS

GENERAL NOTES

1. DRAWINGS APPLY TO EITHER STRUCTURAL ANGLES OR TUBULAR POSTS.
2. SEE TABLE FOR METAL TUBULAR POST DIMENSIONS.

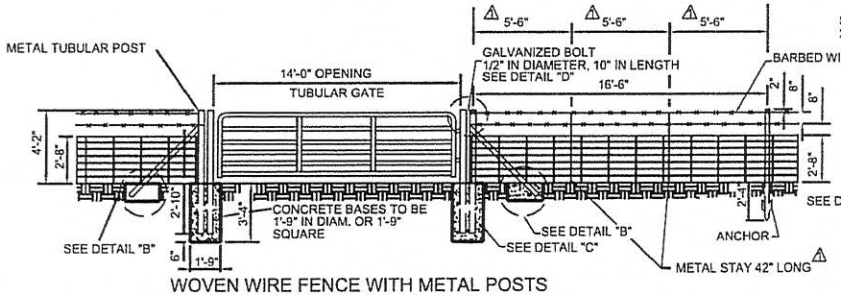

WOVEN WIRE FENCE WITH METAL POSTS

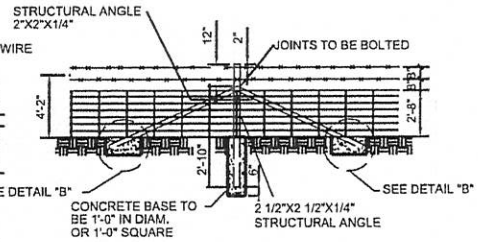

INTERMEDIATE METAL POST BRACE

TABLE FOR METAL TUBULAR POSTS

TYPE	O.D. INCHES	WT.LBS/LIN.FT.
BRACE POSTS	1.66	2.27
INTERMEDIATE POSTS	2.875	5.79
CORNER POSTS	4.00	9.11
GATE POSTS, UP TO 18 FEET	4.00	9.11

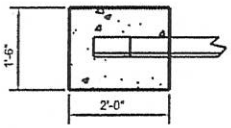

TOP VIEW

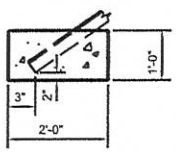

SIDE VIEW

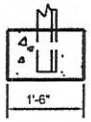

END VIEW

DETAIL "B"
ANCHOR DETAIL OF DIAGONAL METAL POST MEMBER

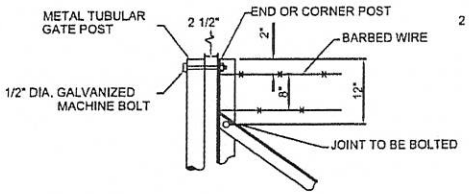

DETAIL "D"

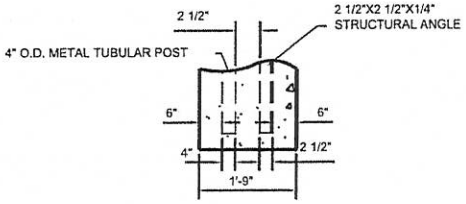

DETAIL "C"

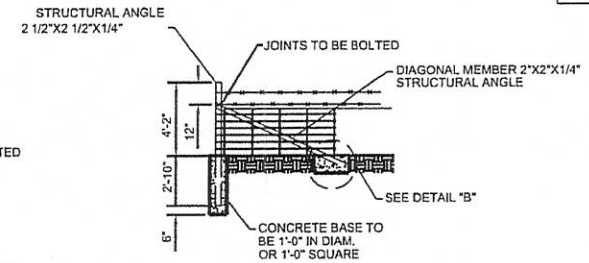

CORNER OR END METAL POST BRACE

NO.	DATE	REV. BY	DESCRIPTION
1	08-16-13	M. FAHEY	ADD METAL STAYS @ W.W. FENCE

REVISIONS (OR CHANGE NOTICES)

NEW MEXICO DEPARTMENT OF TRANSPORTATION STANDARD DRAWING

BARBED WIRE AND WOVEN WIRE FENCE PLACEMENT

APPROVED _____ DESIGN ENGINEER _____ DATE

DESIGNED BY ___ DRAWN BY ___ CHECKED BY ___

607-01-1/4 SHEET 1 OF 4

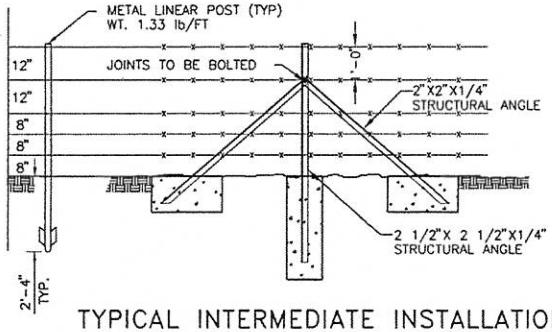

TYPICAL INTERMEDIATE INSTALLATION

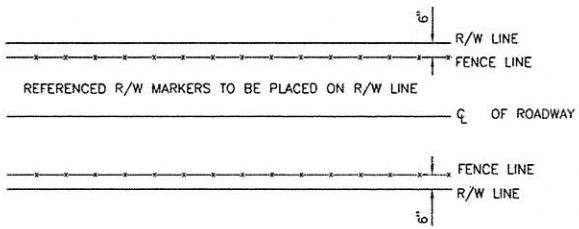

TYPICAL PLAN VIEW ILLUSTRATING
. METHOD OF PLACING FENCE

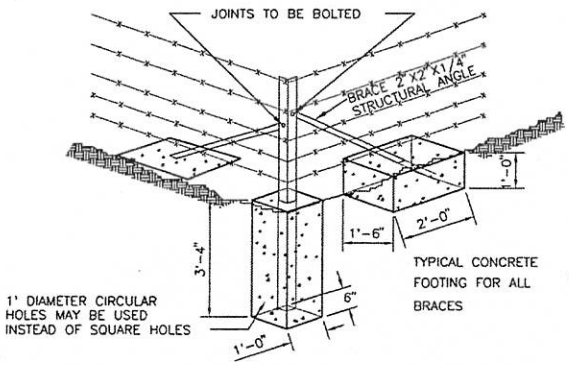

TYPICAL CORNER BRACE INSTALLATION

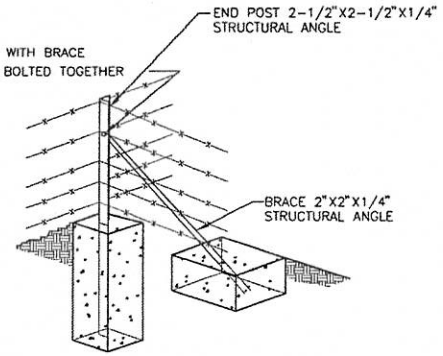

TYPICAL FENCE INTERSECTION INSTALLATION

BRACE ATTACHMENT DETAIL

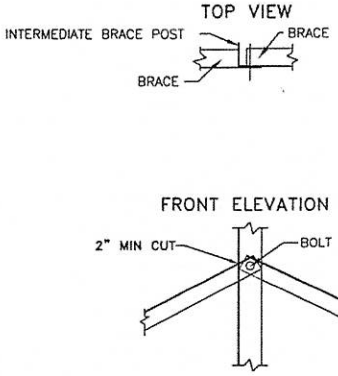

ALTERNATE
BRACE ATTACHMENT DETAIL

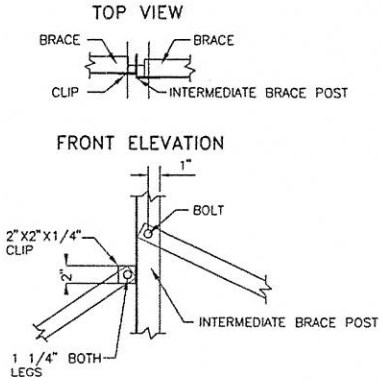

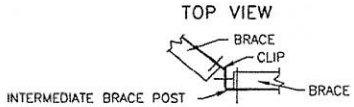

CLIP FOR ANGLE POINT

NO.	DATE	REV. BY	DESCRIPTION

REVISIONS (OR CHANGE NOTICES)

NEW MEXICO
DEPARTMENT OF TRANSPORTATION
STANDARD DRAWING

BARBED WIRE AND WOVEN WIRE
FENCE PLACEMENT

APPROVED DPE 11/29/04
DESIGN ENGINEER DATE

DESIGNED BY___ DRAWN BY ___ CHECKED BY ___

607-01-2/4 SHEET 2 OF 4

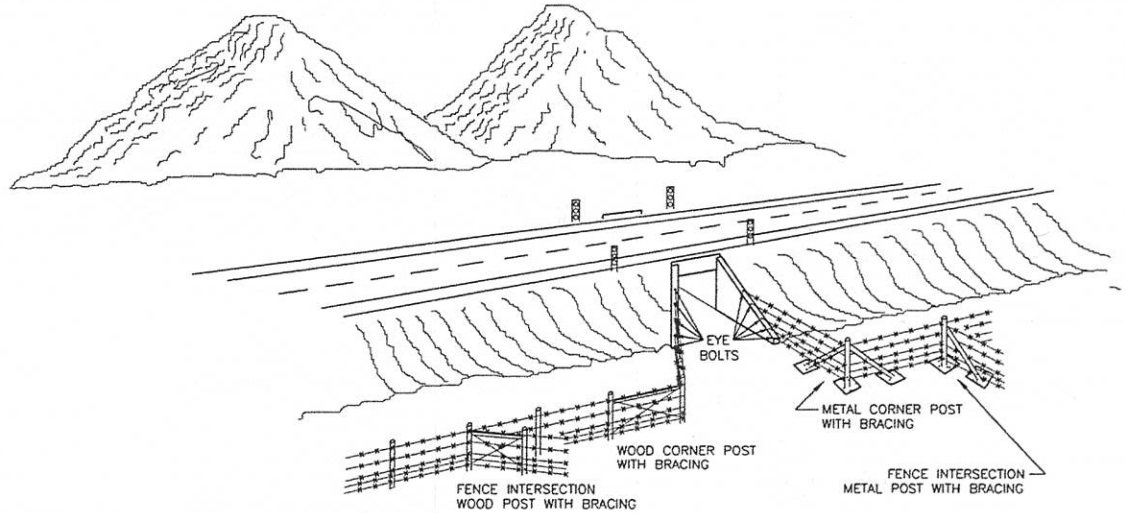

FENCE CONSTRUCTION AT STRUCTURE

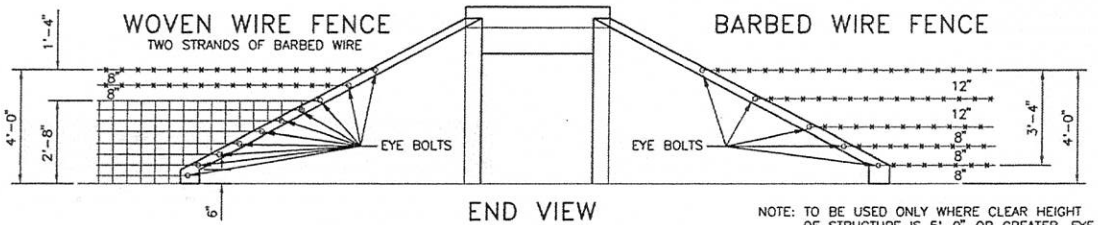

END VIEW
BRACING AT STRUCTURE

NOTE: TO BE USED ONLY WHERE CLEAR HEIGHT OF STRUCTURE IS 5'-0" OR GREATER. EYE BOLTS TO BE PLACED AS INDICATED AND SHALL ALSO BE USED TO TIE WING FENCES TO CONCRETE BLANKETS.

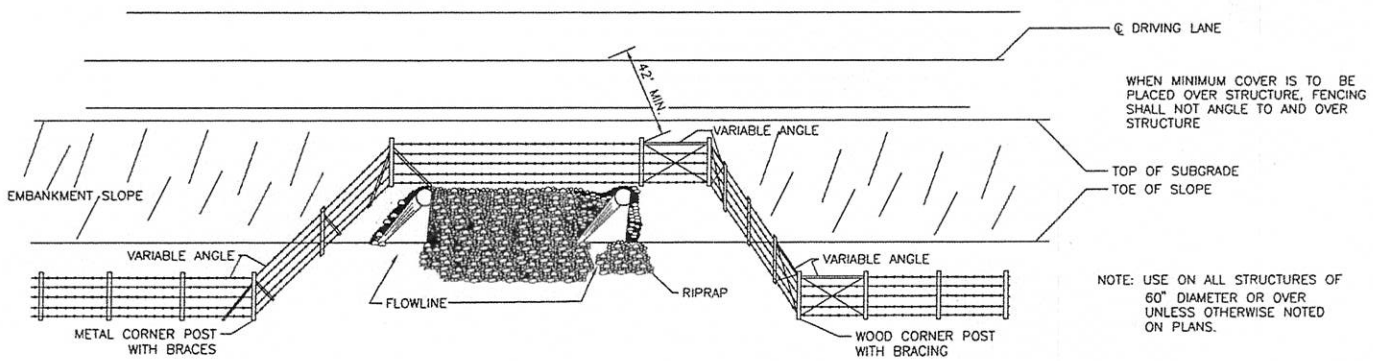

WHEN MINIMUM COVER IS TO BE PLACED OVER STRUCTURE, FENCING SHALL NOT ANGLE TO AND OVER STRUCTURE

NOTE: USE ON ALL STRUCTURES OF 60" DIAMETER OR OVER UNLESS OTHERWISE NOTED ON PLANS.

TYPICAL INSTALLATION OF FENCING OVER STRUCTURES

NO.	DATE	REV. BY	DESCRIPTION

REVISIONS (OR CHANGE NOTICES)

NEW MEXICO
DEPARTMENT OF TRANSPORTATION
STANDARD DRAWING

BARBED WIRE AND WOVEN WIRE FENCE PLACEMENT

APPROVED DPE 11/29/04
DESIGN ENGINEER DATE

DESIGNED BY___ DRAWN BY ___ CHECKED BY ___

607-01-3/4 SHEET 3 OF 4

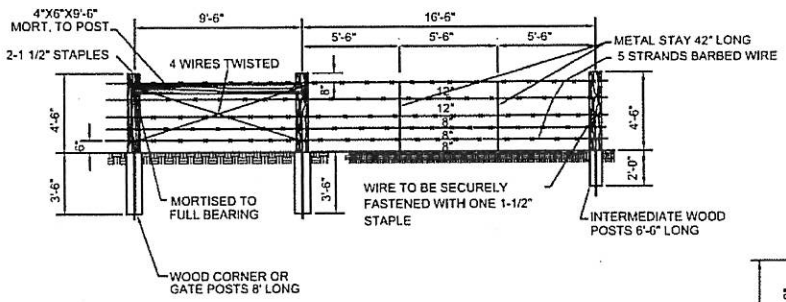

BARBED WIRE FENCE WITH WOOD POSTS

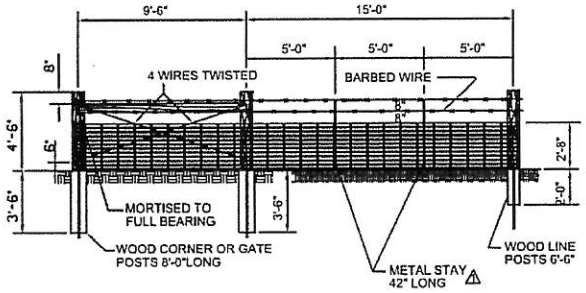

WOVEN WIRE FENCE WITH WOOD POSTS

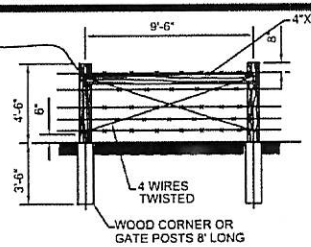

GATE, CORNER, OR END WOOD POST BRACE

GENERAL NOTES

1. FENCE WIRE SHALL BE PLACED ON THE FIELD SIDE OF THE POSTS EXCEPT ON THE INSIDE OF CURVES.
2. CORNER INTERMEDIATE AND GATE BRACE POSTS SHALL HAVE A DIAMETER OF 6". LINE POSTS SHALL HAVE A DIAMETER OF 3". ALL POSTS SHALL BE OF THE SAME TYPE THROUGHOUT THE PROJECT.

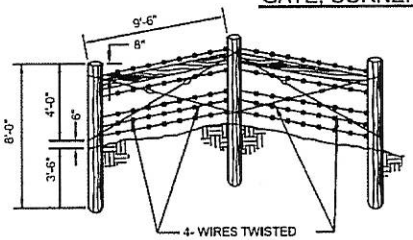

JOG BRACE

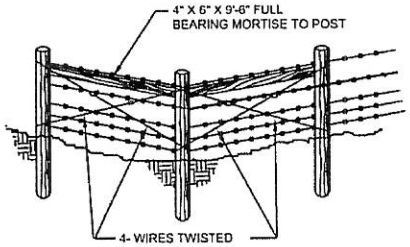

CORNER BRACE

PERSPECTIVE VIEW OF CORNER, JOG, AND CROSS FENCE BRACING TO BE USED FOR BARBED AND WOVEN WIRE FENCE

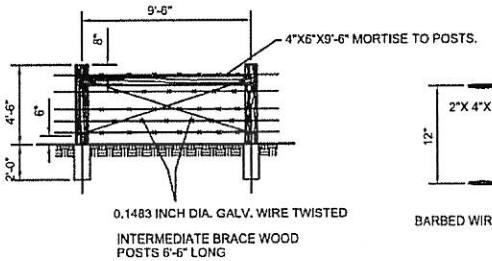

INTERMEDIATE WOOD POST BRACE

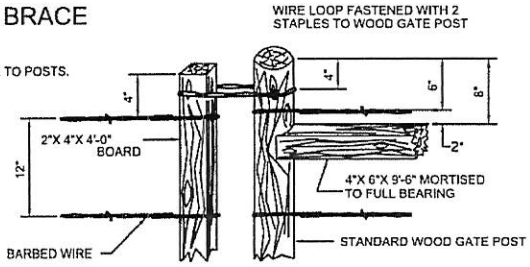

DETAIL OF WOOD GATE CATCH

PERSPECTIVE VIEW END AND WING BRACING TO BE USED FOR BARBED AND WOVEN WIRE FENCE

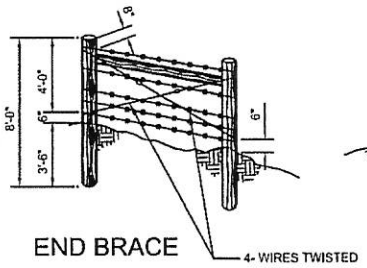

END BRACE

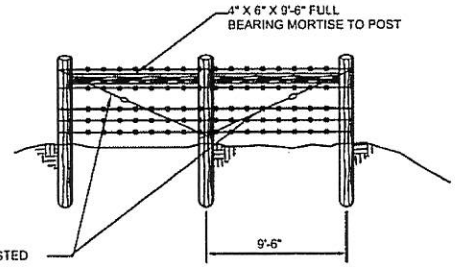

WING BRACE

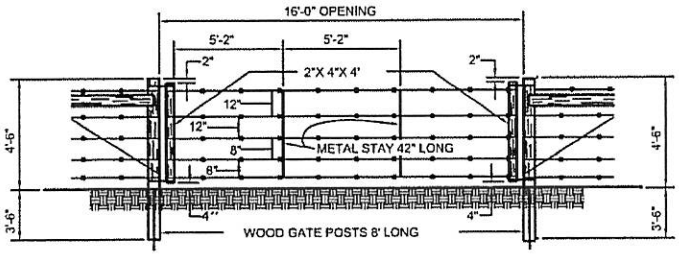

BARBED WIRE GATE

NO.	DATE	REV. BY	DESCRIPTION
1	08-16-13	M. FAHEY	ADD METAL STAYS @ W.W. FENCE

REVISIONS (OR CHANGE NOTICES)

NEW MEXICO
DEPARTMENT OF TRANSPORTATION
STANDARD DRAWING

BARBED WIRE AND WOVEN WIRE FENCE PLACEMENT

APPROVED _____ DESIGN ENGINEER _____ DATE

DESIGNED BY ___ DRAWN BY ___ CHECKED BY ___

607-01-4/4 SHEET 4 OF 4

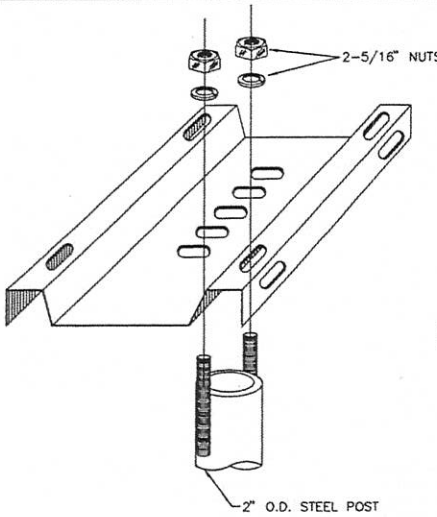

SINGLE UNIT MOUNT

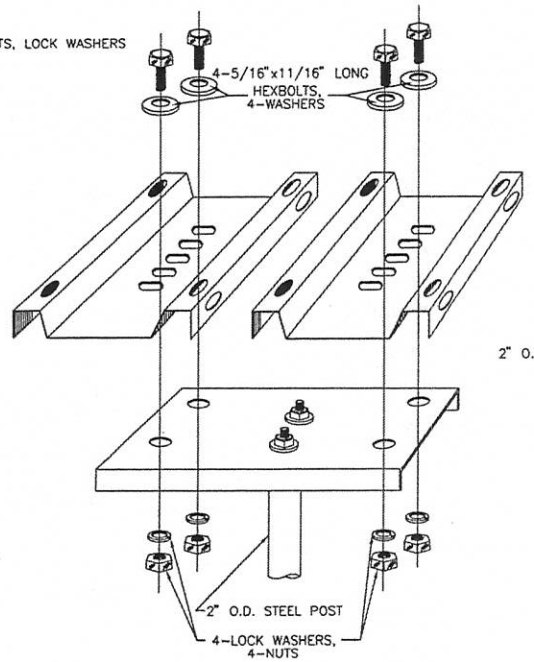

DOUBLE UNIT MOUNT

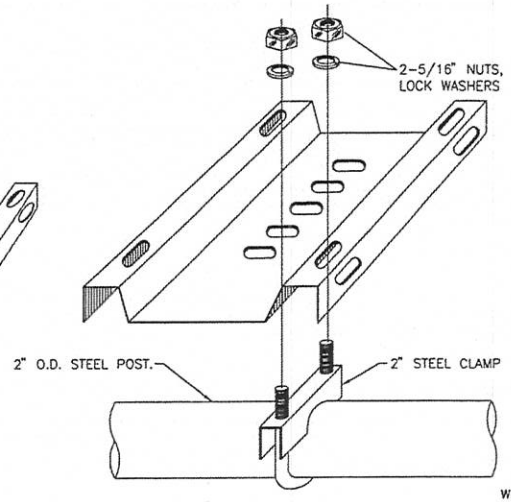

MULTIPLE UNIT MOUNT

GENERAL NOTES

1. NEW MAILBOXES AND MAIL STOP LAYOUT SHALL BE BUILT ACCORDING TO POSTAL REGULATIONS, CURRENT EDITION OF AASHTO GUIDELINE "A GUIDE FOR ERECTING MAILBOXES ON HIGHWAYS" AND AS DIRECTED BY THE PROJECT MANAGER. MAIL STOP LAYOUT SHALL BE CONSIDERED INCIDENTAL TO MAILBOXES.
2. ALL HARDWARE SHALL MEET FHWA CRASHWORTHINESS REQUIREMENTS AS PER NCHRP 350 GUIDELINES AND SHALL BE ON THE DEPARTMENT'S APPROVED PRODUCT LIST.
3. BOLTS SHALL CONFORM TO ASTM A307, GALVANIZED CARBON STEEL OR ASTM A193, 316 STAINLESS STEEL.
4. ALL MAILBOXES REPLACED SHALL FACE IN THE SAME DIRECTION AS EXISTING.

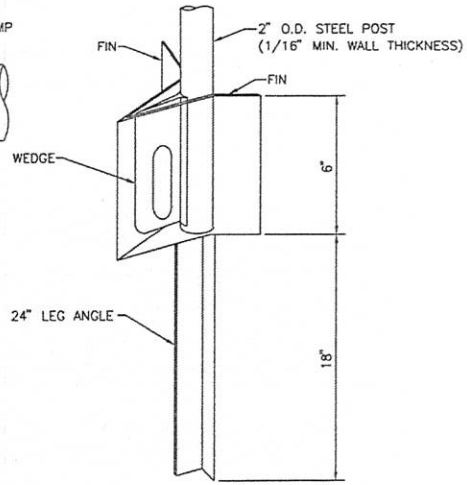

YIELDING BASE POST SUPPORT

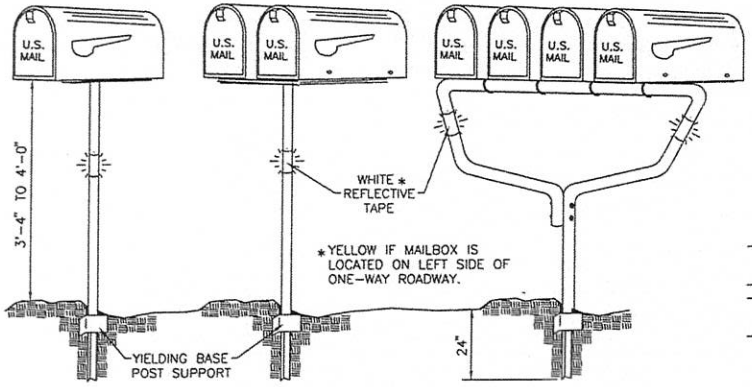

SINGLE DOUBLE MULTIPLE

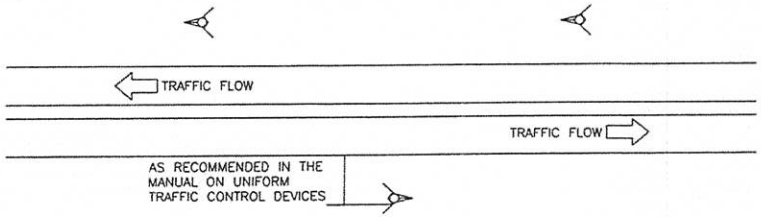

ROADSIDE OR MEDIAN PLACEMENT

NO.	DATE	REV. BY	DESCRIPTION

REVISIONS (OR CHANGE NOTICES)

NEW MEXICO DEPARTMENT OF TRANSPORTATION STANDARD DRAWING

MAILBOXES AND STYLE POSTS, MISCELLANEOUS DETAILS

APPROVED DPL 11/29/07
DESIGN ENGINEER DATE

DESIGNED BY___ DRAWN BY ___ CHECKED BY ___

667-01-1/2 SHEET 1 OF 2

SUGGESTED MINIMUM CLEARANCE DISTANCES TO NEAREST MAILBOX IN MAIL STOPS AT INTERSECTIONS

THROUGH ROAD SPEED MPH	D_1 (FEET)	
	$nv_c v_m \leq 4000$	$nv_c v_m > 4000$
35	65	200
≥ 55	65	295

THROUGH ROAD SPEED MPH	D_2 (FEET)		
	$\frac{v_c}{1.5n-0.5} \leq 50$	$50 < \frac{v_c}{1.5n-0.5} \leq 400$	$\frac{v_c}{1.5n-0.5} > 400$
35	65	100	100
≥ 55	150	150	200

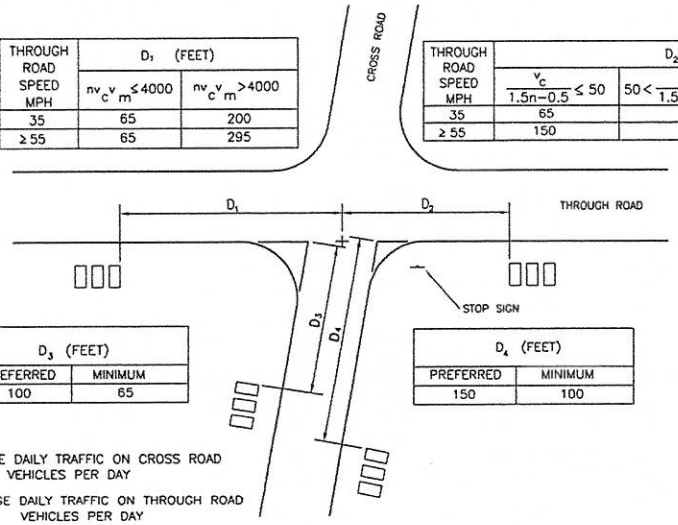

D_3 (FEET)	
PREFERRED	MINIMUM
100	65

D_4 (FEET)	
PREFERRED	MINIMUM
150	100

V_c –AVERAGE DAILY TRAFFIC ON CROSS ROAD VEHICLES PER DAY

V_m –AVERAGE DAILY TRAFFIC ON THROUGH ROAD VEHICLES PER DAY

N –NUMBER OF MAILBOXES AT MAIL STOP

SUGGESTED GUIDELINES FOR LATERAL PLACEMENT OF MAILBOXES TABLE 1

HIGHWAY TYPE AND TRAFFIC CONDITIONS	WIDTH OF ALL-WEATHER SURFACE OF TURNOUT OR AVAILABLE SHOULDER AT MAILBOX FEET		DISTANCE ROADSIDE FACE OF MAILBOX IS TO BE OFFSET BEHIND EDGE OF TURNOUT OR USABLE SHOULDER INCHES	
	PREFERRED	MINIMUM	PREFERRED	MINIMUM
RURAL HIGHWAY ADT OVER 10,000 VPD	>12	8	8 TO 12	0
RURAL HIGHWAY ADT=1,500 TO 10,000 VPD	12	8		
RURAL HIGHWAY ADT=400 TO 1,500 VPD	10	8		
RURAL ROAD ADT UNDER 400 VPD	8	6		10*
RESIDENTIAL STREET WITHOUT CURB OR ALL-WEATHER SHOULDER	6	0		
CURBED RESIDENTIAL STREET	NOT APPLICABLE		8 TO 12 BEHIND TRAFFIC FACE OF CURB	6 BEHIND TRAFFIC FACE OF CURB

ADT = AVERAGE DAILY TRAFFIC VPD = VEHICLES PER DAY

* IF A TURNOUT IS PROVIDED, THIS MAY BE REDUCED TO ZERO

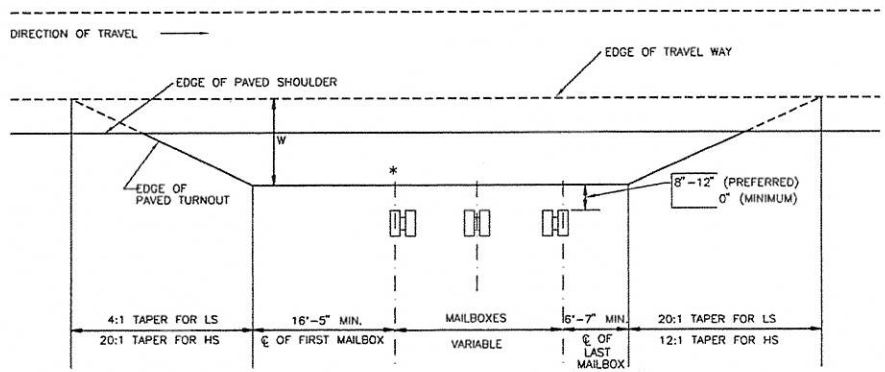

LS = A MINIMUM DESIGN FOR ROADS CARRYING LOW SPEED TRAFFIC AND FOR LOCAL AND COLLECTOR ROADS.
HS = FOR ROADS CARRYING HIGH SPEED TRAFFIC.
W = FOR SUGGESTED WIDTHS SEE TABLE 1.
* PAVED TURNOUT SURFACING ITEMS SHALL BE INCLUDED WITH ROADWAY SURFACING ITEMS.

MAILBOX TURNOUT

GENERAL NOTES:

1. FOR MAILBOX MOUNTING DETAILS SEE STANDARD 667-01-1/2.
2. NEIGHBORHOOD DELIVERY AND COLLECTION BOX UNITS ARE A SPECIALIZED TYPE OF MULTIPLE MAILBOX INSTALLATION THAT SHOULD BE LOCATED OUTSIDE THE CLEAR ZONE.
3. ALL EXPOSED MAILBOXES SHOULD MEET FHWA CRASHWORTHINESS REQUIREMENTS AS PER NCHRP REPORT 350 GUIDELINES.
4. MAILBOX TO POST ATTACHMENTS SHOULD PREVENT MAILBOXES FROM SEPARATING FROM THEIR SUPPORTS UNDER VEHICLE IMPACTS.
5. MULTIPLE MAILBOX INSTALLATIONS MUST MEET THE SAME CRITERIA AS DO SINGLE MAILBOX INSTALLATIONS.
6. NEW MAILBOXES SHALL BE BUILT ACCORDING TO POSTAL REGULATIONS, CURRENT EDITION OF AASHTO GUIDELINE " A GUIDE FOR ERECTING MAILBOXES ON HIGHWAYS" AND AS DIRECTED BY PROJECT MANAGER.
7. WHERE A MAILBOX IS LOCATED AT A DRIVEWAY ENTRANCE, IT SHALL BE PLACED ON THE FAR SIDE OF THE DRIVEWAY IN THE DIRECTION OF THE DELIVERY ROUTE.
8. MAILBOXES SHOULD BE PLACED ONLY ON THE RIGHT-HAND SIDE OF THE HIGHWAY IN THE DIRECTION OF TRAVEL OF THE CARRIER, EXCEPT ON ONE-WAY STREETS WHERE THEY MAY BE PLACED ON THE LEFT-HAND SIDE.
9. ALL HARDWARE SHALL MEET FHWA CRASHWORTHINESS REQUIREMENTS AS PER NCHRP 350 GUIDELINES AND SHALL BE ON THE DEPARTMENT'S APPROVED PRODUCT LIST.
10. FOR ADDITIONAL INFORMATION SEE THE CURRENT AASHTO ROADSIDE DESIGN GUIDE FOR ERECTING MAILBOXES ON STREETS AND HIGHWAYS.

NO.	DATE	REV. BY	DESCRIPTION

REVISIONS (OR CHANGE NOTICES)

NEW MEXICO
DEPARTMENT OF TRANSPORTATION
STANDARD DRAWING

MAILBOX INSTALLATION DETAILS

APPROVED DPL 11/23/04
DESIGN ENGINEER DATE

DESIGNED BY___ DRAWN BY ___ CHECKED BY ___

667-01-2/2 SHEET 2 OF 2