Hwy 14 Senior/Community Center

Cerrillos, NM 87010

October 20, 2017

PROJECT TEAM:

Owner:

SANTA FE COUNTY
Ron Sandoval, Project Manager
102 Grant Ave.
Santa Fe, NM 87501
phone: (505) 992-9863

Architect of Record:
AUTOTROPH Inc.
422 Greg Avenue
Santa Fe, NM 87501
phone: (505) 216-7555

Civil Engineer:
ANCHOR ENGINEERING, INC.
1035 Bosque Loop
Bosque Farms, NM 87068
phone: (505) 362-1530

Landscape Architect:
SURROUNDINGS
1611 Paseo de Peralta
Santa Fe, NM 87501
phone: (505) 982-3454

Mechanical / Plumbing, Electrical Engineer:
M & E ENGINEERING, INC.
1222 Luisa Street, Suite B
Santa Fe, NM 87505
phone: (505) 983-2389

Structural Engineer:
CHAVEZ GRIEVES
4700 Lincoln Road NE
Albuquerque, NM 87109
phone: (505) 344-4080

Commercial Kitchen Designer:
RDA DESIGN GROUP
phone: (505) 898-3344
9445 Coors Blvd. NW
Albuquerque, NM 87114

SITE LOCATION MAP:

DRAWING INDEX: GENERAL & ARCHITECTURAL

GENERAL:
G0.0 COVER SHEET
G0.1 GENERAL NOTES, DETAILS & LEGEND
G0.2 CODE ANALYSIS & PROJECT DATA
G0.3 SURVEY

ARCHITECTURAL:
A1.0 ARCHITECTURAL SITE PLAN
A1.1 FLOOR PLAN - BASE BID
A1.2 FLOOR PLAN - ALTERNATES
A1.3 REFLECTED CEILING PLAN
A1.4 ROOF PLAN
A2.1 ELEVATIONS
A3.1 BUILDING SECTIONS
A3.2 WALL SECTIONS
A3.3 WALL SECTIONS
A3.4 WALL SECTIONS
A4.1 ENLARGED PLANS - RESTROOMS
A4.2 ENLARGED PLANS - ARTS & CRAFTS
A4.3 ENLARGED PLANS - SENIOR DINING - ADD ALTERNATE #2
A4.4 ENLARGED PLANS - SERVICE AREA
A4.5 ENLARGED PLANS - SITE ELEMENTS
A5.1 ASSEMBLY DETAILS
A5.2 INTERIOR DETAILS
A5.3 DOOR SCHEDULE & DETAILS
A5.4 WINDOW SCHEDULE & DETAILS
A5.5 STOREFRONT DETAILS
A5.6 CASEWORK DETAILS
A5.7 SITE DETAILS
A6.1 ROOM FINISH SCHEDULE

DRAWING INDEX: CONSULTANT DRAWINGS

CIVIL:
C1.0 SITE PLAN
C2.0 GRADING PLAN
C2.1 FINE GRADING PLAN
C2.2 CROSS SECTIONS
C3.0 SITE UTILITY PLAN
C3.1 WATER HARVESTING PLAN
C3.2 WATERLINE EXTENSION PLAN AND PROFILE
C4.0 SITE DETAILS

LANDSCAPE:
L1.1 LAYOUT & MATERIALS PLAN
L1.2 IRRIGATION PLAN
L1.3 PLANTING PLAN
L5.1 SITE DETAILS
L5.2 IRRIGATION DETAILS
L5.3 PLANTING DETAILS

STRUCTURAL
S0.1 ABBREVIATIONS AND LEGEND
S0.2 GENERAL FOUNDATION & STRUCTURAL NOTES
S0.3 GENERAL STRUCTURAL NOTES
S0.4 GENERAL STRUCTURAL NOTES & SPECIAL INSPECTION TABLES
S1.1 FOUNDATION PLAN
S1.3 ROOF FRAMING PLAN
S2.1 TRUSS ELEVATIONS
S2.2 SHEARWALL ELEVATIONS
S3.1 BUILDING SECTIONS
S3.2 FOUNDATION SECTIONS & DETAILS
S3.3 ROOF FRAMING SECTIONS & DETAILS
S3.4 ROOF FRAMING SECTIONS & DETAILS
S3.5 ROOF FRAMING SECTIONS & DETAILS
S5.1 DETAILS
S6.1 SCHEDULES
S7.1 TYPICAL CONCRETE DETAILS
S7.2 TYPICAL COLD-FORMED DETAILS
S7.3 TYPICAL MASONRY DETAILS

MECHANICAL:
M0.1 MECHANICAL LEGEND AND GENERAL NOTES
M1.1 MECHANICAL FLOOR PLAN
M4.1 ENLARGED MECHANICAL FLOOR PLAN
M5.1 MECHANICAL DETAILS
M5.2 MECHANICAL DETAILS
M6.1 MECHANICAL SCHEDULE

FIRE PROTECTION:
FP0.1 FIRE PROTECTION LEGEND AND GENERAL NOTES
FP1.1 FIRE PROTECTION FLOOR PLAN

PLUMBING:
P0.1 PLUMBING GENERAL NOTES AND LEGEND
SU1.1 PLUMBING SITE UTILITY PLAN
P1.1 PLUMBING OVERALL FLOOR PLAN
P1.2 PLUMBING OVERALL FLOOR PLAN - CONDENSATE PIPING
P4.1 PLUMBING ENLARGED FLOOR PLANS - WASTE & VENT
P4.2 PLUMBING ENLARGED FLOOR PLANS - DOMESTIC WATER & GAS
P4.3 PLUMBING ENLARGED FLOOR PLANS - DOMESTIC WATER & GAS
P5.1 PLUMBING DETAILS
P6.1 PLUMBING SCHEDULE
P6.2 PLUMBING ISOMETRICS & DIAGRAMS
P6.3 PLUMBING ISOMETRICS & DIAGRAMS

ELECTRICAL:
E0.1 ELECTRICAL LEGEND AND GENERAL NOTES
E0.2 ELECTRICAL DETAILS & SCHEDULES
ES1.1 ELECTRICAL SITE PLAN
E1.1 ELECTRICAL FLOOR PLAN - LIGHTING
E1.2 ELECTIRCAL FLOOR PLAN - POWER
E1.3 ELECTRICAL FLOOR PLAN - MECHANICAL POWER
E1.4 ELECTRICAL FLOOR PLAN - SPECIALTY SYSTEMS
E4.1 ENLARGED KITCHEN ELECTRICAL POWER PLAN
E5.1 ELECTRICAL RISER DIAGRAM & PANEL SCHEDULES

KITCHEN DESIGN:
K1.1 FOODSERVICE PLAN
K1.2 ELECTRICAL ROUGH-INS
K1.3 PLUMBING, WASTE AND GAS ROUGH-INS
K1.4 WASTE ROUGH-INS
K1.5 HOOD PLAN
K1.6 ELEVATIONS
K1.7 ELEVATIONS
K1.8 EQUIPMENT UTILITY SCHEDULE
K1.9 EQUIPMENT UTILITY SCHEDULE
K1.10 SPECIAL INSTALL

STATE OF NEW MEXICO
Alexander C. Dzurec
NO. 003942
11/29/17
REGISTERED ARCHITECT

autotroph
architecture.planning.sustainable design consulting

No.	Description	Date

Hwy 14 Senior Center

Cover Sheet

Project Number	1606
Date	10.20.17
Drawn By	LMB
Checked By	AD

G0.0

Hwy 14 Senior/Community Center

Los Cerrillos, NM 87010

GENERAL DETAILS:

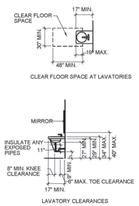

D1 LAVATORY

SCALE: 1/8" = 1'-0"

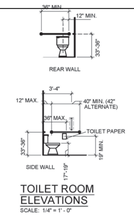

TOILET ROOM ELEVATIONS

SCALE: 1/4" = 1'-0"

D2 TOILET ROOM

SCALE: 1/8" = 1'-0"

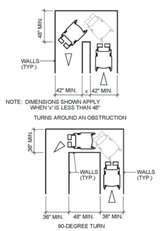

WHEELCHAIR TURNING LAYOUTS

SCALE: 1/4"=1'-0"

C1 WHEEL CHAIR TURNING

SCALE: 1/8" = 1'-0"

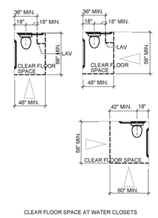

TOILET ROOMS (OPEN)

SCALE: 1/4" - 1'-0"

C2 TOILET ROOM

SCALE: 1/8" = 1'-0"

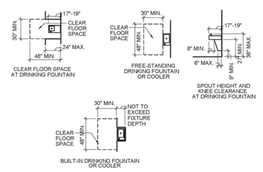

DRINKING FOUNTAINS

SCALE: 1/4" = 1'-0"

C3 DRINKING FOUNTAIN

SCALE : 1/8" = 1'-0" SCALE: 1/8" = 1'-0"

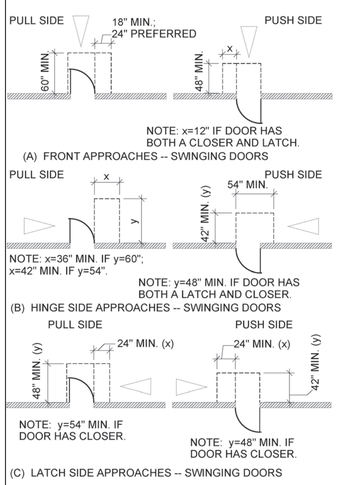

A1 DOOR SWINGS

SCALE: 1/8" = 1'-0"

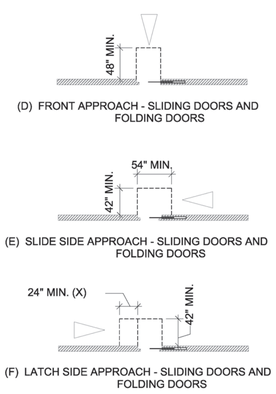

A2 SLIDING DOOR

SCALE: 1/8" = 1'-0"

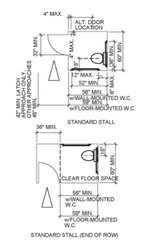

TOILET ROOMS (STALLS)

SCALE: 1/4" = 1'-0"

B3 TOILET ROOM

SCALE: 1/8" = 1'-0"

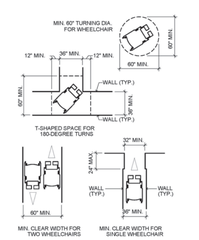

WHEELCHAIR TURNING LAYOUTS

SCALE: 1/4" = 1'-0"

A3 WHEEL CHAIR TURNING

SCALE: 1/8" = 1'-0"

GENERAL NOTES:

1. Use these drawings together with the project manual prepared for this project.
2. All references to the building code or building department shall be construed to mean the rules and regulations adopted by Santa Fe County and the State of New Mexico.
3. All work and materials shall be in accordance with the latest New Mexico Commercial Building Code and with the latest rules and regulations of all other applicable state and/or local codes, laws, ordinances and statutes. Nothing in the drawings or specifications is to be construed as requiring or permitting work contrary to these rules, regulations and codes. All work shall comply with fire department and utility company requirements.
4. If the Contractor ascertains at any time that requirements of this contract conflict with, or are in violation of applicable laws, codes, regulations and ordinances, he shall not proceed with work in question except at his own risk, until Architect has been notified in writing and written determination is made by the architect.
5. Prior to commencement of work, the Contractor shall review all contract documents, reports and related instructions. Where conflicts/inconsistencies between the contract drawings, specifications, field conditions and/or the building code are discovered, the contractor shall notify the architect immediately in writing.
6. Obtain all required permits
7. The Contractor shall visit the project site to familiarize himself with existing conditions. Discrepancies between the contract documents and the actual field conditions shall be reported to the Architect in writing for correction prior to bidding.
8. It is the responsibility of the Contractor to secure the work site to render it adequately protected at all times. The Contractor shall be responsible for damages resulting from failure to provide adequate protection.
9. All construction refuse and debris other than top soils and excavated dirt from the site (see Landscape notes regarding these materials) shall be removed from the job site not less than once a week and shall be properly disposed of off the property.
10. Do not scale drawings. Contractor shall rely on written dimensions as given. The Contractor shall notify the Architect for clarifications.
11. The Contractor shall verify and coordinate all conditions and dimensions at the job site for comparison with drawings and specifications prior to ordering built in items, the start of and during construction. If any discrepancies, inconsistencies or omissions are found, the Architect shall be notified, in writing for clarification prior to proceeding with work.
12. Dimensions shown on floor plans, sections, elevations, and details are to rough framing unless otherwise noted.
13. All work shall be executed in accordance with the best accepted trade practices. Comply with manufacturers printed instructions along with the specified or otherwise recognized standards of agencies and associations for materials, installation and workmanship.
14. The Contractor shall coordinate his work with all the subcontractors. The work shall be coordinated in such a manner that any subcontractor shall not delay or interfere with carrying forward the work of any other subcontractor.
15. The Contractor shall be solely responsible for delivery of materials and equipment to the project site.
16. Positive drainage away from the building is the responsibility of the Contractor.
17. Contractor shall provide and install all blocking, stiffeners, bracings, back-up plates and supporting brackets required for the installation of work. Blocking is required for all wall and ceiling mounted specialties and equipment.
18. Secure construction materials at all times. The Owner can provide no on site interior storage space. The Owner shall not be responsible for materials prior to final acceptance. All building materials stored at construction areas are to be secured in a locked area. Access to such areas is to be controlled by Owner and the General Contractor. Flammable materials shall be used and stored in an adequately ventilated space. All flammable materials shall be kept sealed in their manufacturers containers and kept away from heat and flame and used per the manufacturer's written instructions.
19. Construction operations shall be confined to normal working hours, per municipal noise ordinance, monday thru friday except legal holidays unless the Contractor receives permission in writing from the Owner.
20. Construction work will be confined to the areas shown on the contract documents and any additional areas that the Contractor and authority mutually agree upon. Contractor will limit to the minimum the amount of dust, dirt and other such inconveniences created to all other areas within the project site.
21. The drawings indicate location, dimension, and typical details of construction. The drawings do not illustrate every condition. Work not particularly detailed shall be of construction similar to parts detailed. Minor details not usually shown or specified, but necessary for proper construction of any part of the work, shall be included as if they were indicated in the contract documents.
22. Abbreviations throughout the plans are those in common use. Notify the Architect of any abbreviations in question.
23. In the case of a conflict between the drawings and the specifications, the most restrictive shall take precedence. Contractor shall notify the Architect to resolve any conflict before proceeding with the work.
24. The Contractor shall furnish all materials, labor, equipment, transportation and services necessary for the satisfactory completion of work unless designated (n.i.c.). All equipment, work and materials shall comply with all current and local applicable codes and governing regulations, and the contract documents. Only new materials and equipment of recent manufacture, of quality specified, free from defects, will be permitted on the work.
25. All work indicated on drawings is new work unless specifically indicated as existing.
26. The Contractor shall provide supervision for the work at all times that construction operations are ongoing. The Contractor shall be solely responsible for and have control over construction means, methods, techniques, sequences and procedures and for coordinating all portions of the work under the contract.
27. The Contractor shall be responsible for initiating, maintaining and supervising all safety precautions and programs in connection with the performance of the work. All Contractors and subcontractors performing work on the premises shall be responsible for initiating, maintaining and supervising a reasonable and prudent safety program including but not limited to isolation of work areas and the prompt removal of any debris or tools which might endanger the public, visitors and staff of the Owner or Architect.
28. The Contractor shall protect all finish work and surfaces from damage during the course of construction and shall replace and/or repair all damaged surfaces caused by Contractor or subcontractor personnel to the satisfaction of the Owner and Architect.
29. Shop drawings shall be submitted for all equipment, cabinets and materials which must interface and coordinate with others, whether detailed or not. Shop drawings shall be submitted per the specifications.
30. All dissimilar metallic materials shall be effectively isolated from each other to prevent galvanic corrosion.
31. All wood in contact with masonry or concrete shall be pressure treated with an approved preservative.
32. Effectively seal all plumbing, electrical and other exterior wall penetrations.
33. The Contractor is responsible for final clean up and disposal upon completion of work. Remove debris, rubbish and waste material from the Owner's property to a lawful disposal or recycling area and pay all hauling and dumping costs. Conform to pertaining federal, state and local laws, regulations, and orders. All construction areas shall be left vacuum or wet mop clean and free from debris. Clean all dust, dirt, stains, hand marks, paint spots, droppings, and other blemishes.

LEGEND:

- 1A / A-A0.1 — Elevation indicates Drawing 1A, Sheet A-A0.1
- 1A / A-A0.1 — Section indicates Drawing 1A, Sheet A-A0.1
- 1A / A-A0.1 — Section Detail indicates Drawing 1A, Sheet A-A0.1
- 1A / A-A0.1 — Detail indicates Drawing 1A, Sheet A-A0.1
- W21 / A — Window number Indicator
- 108 — Door number Indicator
- SIDE OF HINGE — Door or cabinet door swing
- FLOOR EL. 0'-0" — Elevation mark
- 1 — Panel sign Type indicated sign Type 1
- WT1 — Wall Type Indicator
- Break line
- Center line
- Line of soffit above
- Outline of hidden construction or objects
- New wall type varies per partition and wall type legend
- Undisturbed or compacted subgrade
- Gravel, drainage course
- Wood blocking, furring, rough dimensional lumber
- Metal
- Reinforced concrete
- XPS Rigid insulation
- Plywood
- Finished wood
- Gypsum wall board

FIRE BLOCKING NOTES:

Fire blocking

1. Fireblocking shall be provided in concealed spaces of stud walls and partitions, including furred spaces, and parallel rows of studs or staggered studs, as follows:
2. Vertically at the ceiling and floor levels.
3. Horizontally at intervals not exceeding 10 feet
4. Connections between vertical studs spaces and horizontal soffits
5. Fireblocking materials. Fireblocking shall consist of the following materials:
6. Two-inch nominal lumber.
7. Two thicknesses of 1-inch nominal lumber with broken lap joints.
8. One thickness of 0.719-inch wood structural panels with joints backed by 0.719-inch wood structural panels.
9. One thickness of 0.7s-inch (19.1 mm) particleboard with joints backed by 0.7s-inch particleboard.
10. One-half-inch gypsum board.
11. One-fourth-inch cement-based millboard.
12. Batts or blankets of mineral wool, mineral fiber or other approved materials installed in such a manner as to be securely retained in place.
13. Unfaced fiberglass. Unfaced fiberglass batt insulation used as fireblocking shall fill the entire cross section of the wall cavity to a minimum height of 16 inches (406 mm) measured vertically. When piping, conduit or similar obstructions are encountered, the insulation shall be packed tightly around the obstruction.

STATE OF NEW MEXICO
Alexander C. Dzurec
NO. 003942
11/29/17
REGISTERED ARCHITECT

autotroph
architecture.planning.sustainable design consulting

No.	Description	Date

Hwy 14 Senior Center

General Notes, Details & Legend

Project Number	1606
Date	10.20.17
Drawn By	LMB
Checked By	AD

G0.1

Hwy 14 Senior/Community Center

Los Cerrillos, NM 87010

EGRESS DIAGRAM:

MAX TRAVEL DISTANCE per 1016.1 = 200'
MAX TRAVEL DISTANCE provided = 71'

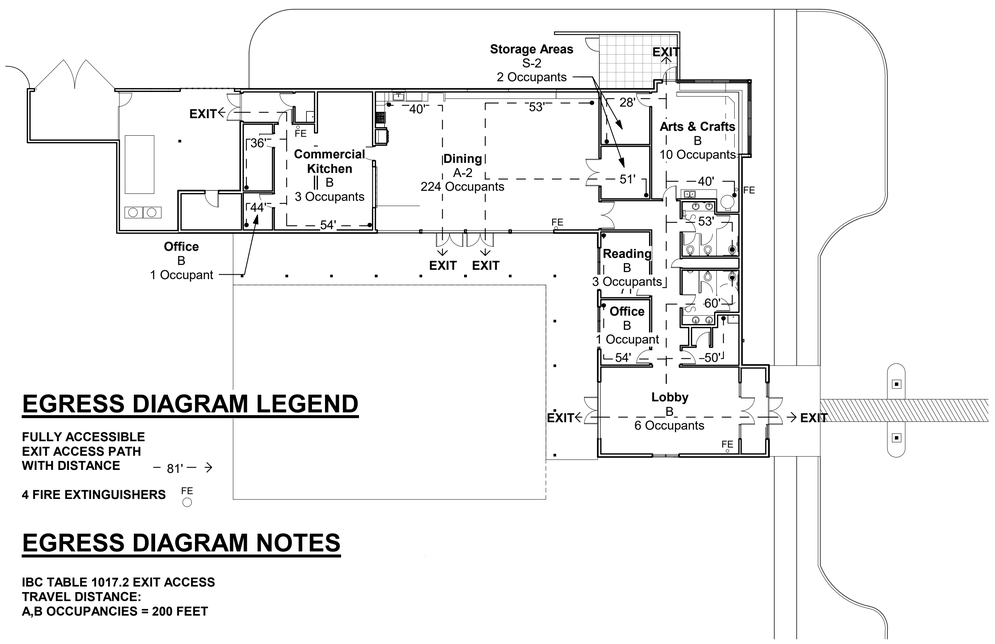

EGRESS DIAGRAM LEGEND

FULLY ACCESSIBLE EXIT ACCESS PATH WITH DISTANCE – 81' – →

4 FIRE EXTINGUISHERS FE

EGRESS DIAGRAM NOTES

IBC TABLE 1017.2 EXIT ACCESS TRAVEL DISTANCE:
A,B OCCUPANCIES = 200 FEET

1 Floor Plan - Egress Diagram
SCALE: 1/16" = 1'-0"

Plumbing Fixtures (per 2902.1):

A-2 Occupancy

Male	Female
Occupants: 112	Occupants: 112
WC: 1.5	WC: 1.5
Lavatories: 0.56	Lavatories: 0.56

B Occupancy

Male	Female
Occupants: 11	Occupants: 11
WC: 1	WC: 1
Lavatories: 1	Lavatories: 1

S-2 Occupancy

Male	Female
Occupants: 2	Occupants: 2
WC: .02	WC: .02
Lavatories: .02	Lavatories: .02

Male		**Female**	
Occupants: 125		**Occupants: 125**	
WC: 2.52	**=3**	**WC: 2.52**	**=3**
Lavatories: 1.58	**=2**	**Lavatories: 1.58**	**=2**

Water Fountains: 1/500 people = 1

Fixture Totals:	**Required**	**Provided**
WC:	**3 each**	**3 each**
Lavatories:	**2 each**	**2 each**
Water Fountains:	**1**	**2**
Service Sinks:	**1**	**2**

CODE ANALYSIS:

Relevent Codes:
2015 New Mexico Commercial Building Code (NMCBC) - Title 14 Chapter 7 Part 2
Adopted Model Code: 2015 International Building Code (IBC) (as amended by 14.7.2)
2009 New Mexico Energy Conservation Code (NMECC) - Title 14 Chapter 7 Part 6
Adopted Model Code: 2009 International Energy Conservation Code (IECC)(as amended by 14.7.6)
2012 New Mexico Plumbing Code (NMPC) - Title 14 Chapter 8 Part 2
Adopted Model Code: 2012 Uniform Plumbing Code (UPC)(as amended by 14.8.2)
2012 New Mexico Mechanical Code (NMMC) - Title 14 Chapter 9 Part 2
Adopted Model Code: 2012 Uniform Mechanical Code (UMC)(as amended by 14.9.2)
2014 New Mexico Electrical Code (NMEC) - Title 14 Chapter 10 Part 4
Adopted Model Code: 2014 National Electrical Code (NEC)(as amended by 14.10.4)
New Mexico State Fire Marshall Office
Adopted Model Code: 2003 International Fire Code

Design Standards:
Santa Fe County 2014 Design Guide (Los Cerrillos Overlay District)
Santa Fe County Sustainable Land Development Code
2015 Los Cerrillos Community Plan

HWY 14 SENIOR/COMMUNITY CENTER - ANALYSIS

Work is being performed per 2015 New Mexico Commercial Building Code (NMCBC) - Title 14 Chapter 7 Part 7
Adopted Model Code: 2015 International Building Code (IEBC) (as amended by 14.7.7)

Zoning and Land UseSummary:
Land Use Classification: Public/Institutional
Setbacks: 10' Front/Rear, 5' Side
Height Limitations: up to 30'
Parking: 1/250 SF of net usable area = 23 spaces + 5 employees = **28 spaces required/56 Provided**

OCCUPANCY GROUP:	A-2/B/S-2	(non- separated)
CONSTRUCTION CLASSIFICATION:	TYPE VB	
ALLOWABLE HEIGHT (TABLE 503; A-3 USE)	2 STORY (30 FT)	
PROPOSED HEIGHT:	1 STORY (26 FT)	
ALLOWABLE BLDG AREA (TABLE 503; A-3 USE):	**6,000 SF x 200% = 12,000 SF**	

* *ALLOWABLE INCREASE FOR FULLY SPRINKELD BUILDING: 1 STORY INCREASE (SEC. 504.2) 200% AREA INCREASE (SEC. 506.3)*

HEATED AREA:	**5,520 SF**	
- PORTAL	1,385 SF	
- PORTE COCHERE	512 SF	
- LOADING DOCK) 1,385 SF + 512 SF +	315 SF	
TOTAL UNHEATED AREA:	**2,212 SF**	

SEISMIC SITE CLASSIFICATION: D

FIRE RESISTANCE RATING OF BUILDING ELEMENTS (TABLE 601):

PRIMARY STRUCTURAL FRAME	0 HOUR
BEARING WALLS - EXTERIOR	0 HOUR
BEARING WALLS - INTERIOR	0 HOUR
NONBEARING WALLS AND PARTITIONS - EXTERIOR (FIRE SEPARATION DISTANCE ≥ 30 FEET)	0 HOUR
NONBEARING WALLS AND PARTITIONS - INTERIOR	0 HOUR
FLOOR CONSTRUCTION AND SECONDARY MEMBERS	0 HOUR
ROOF CONSTRUCTION AND SECONDARY MEMBERS	0 HOUR

AUTOMATIC SPRINKLER SYSTEM:
NOT REQUIRED - PROVIDED THROUGHOUT

FIRE ALARM & DETECTION SYSTEM:
NOT REUIRED - PROVIDED THROUGHOUT

OCCUPACY LOAD:

Dining Area = 1,544 SF - 7 Net sf/person =	221 Occupants	A-Occupancy
Arts & Crafts & Reading Room = 655 SF 50 Net sf/person =	13 Occupants	B-Occupancy
Offices = 260 SF 100 Gross sf/person =	2 Occupants	B-Occupancy
Reception/Lobby = 600 SF 100 Gross sf/person =	6 Occupants	B-Occupancy
Commercial Kitchen = 600 SF 200 Gross sf/person =	3 Occupants	B-Occupancy
Storage/Support Areas = 658 SF 300 Gross sf/person =	3 Occupants	S-Occupancy
	224 Occupants Total	A-Occupancy
	21 Occupants Total	B-Occupancy
	3 Occupants Total	S-Occupancy
	Total = 248 Occupants	

IBC TABLE 1015.1 MINIMUM NUMBER OF EXITS FOR OCCUPANT LOAD:
49+ OCCUPANT LOAD = 2 EXITS (Provided = 6)

STATE OF NEW MEXICO
Alexander C. Dzurec
NO. 003942
11/29/17
REGISTERED ARCHITECT

autotroph
architecture.planning.sustainable design consulting

No.	Description	Date

Hwy 14 Senior Center

Code Analysis & Project Data

Project Number	1606
Date	10.20.17
Drawn By	Author
Checked By	Checker

G0.2

LEGAL DESCRIPTION: (AS SURVEYED)

A CERTAIN TRACT OF LAND BEING A PORTION OF LOT THREE (3) OF SECTION SEVENTEEN (17) IN TOWNSHIP FOURTEEN (14) NORTH OF RANGE EIGHT (8) EAST OF NEW MEXICO MERIDIAN, NEW MEXICO, WITHIN SANTA FE COUNTY, NEW MEXICO AND BEING MORE PARTICULARLY DESCRIBED AS FOLLOWS:

BEGINNING AT THE SOUTHWEST CORNER OF SAID TRACT HEREIN DESCRIBED, BEING A POINT ON THE SECTION LINE COMMON TO SECTIONS 17 AND 20, T.14N.,R.8E., N.M.P.M.; WHENCE, THE SECTION CORNER FOR SECTIONS 17, 18, 19 AND 20, T.14N., R.8E., N.M.P.M., AN ALUMINUM CAP (STAMPED "ALARID, PS5338, PS11597") IN PLACE, BEARS, S.89°48'22"W., 240.94 FEET DISTANT; THENCE, FROM SAID POINT OF BEGINNING, LEAVE SAID COMMON SECTION LINE,

N.13°03'08"E., A DISTANCE OF 540.94 FEET TO THE NORTHWEST CORNER OF SAID TRACT HEREIN DESCRIBED, BEING A POINT ON THE SOUTHERLY RIGHT OF WAY LINE OF STATE ROAD 14 (NMP#FAGS-214-I&J); THENCE, ALONG SAID SOUTHERLY RIGHT OF WAY LINE (FOR THE NEXT TWO (2) COURSES,

S.66°44'07"E., A DISTANCE OF 553.79 FEET TO A POINT OF CURVATURE; THENCE,

SOUTHEASTERLY, ALONG A CURVE TO THE RIGHT THROUGH A CENTRAL ANGLE OF 22°45'36" HAVING A RADIUS OF 1,357.70 FEET AND AN ARC LENGTH OF 539.33 FEET (CHORD BEARING = S.55°21'12"E., 535.79') TO A POINT OF NON-TANGENCY, BEING THE SOUTHEAST CORNER OF SAID TRACT HEREIN DESCRIBED, INTERSECTING SAID COMMON SECTION LINE; THENCE, ALONG SAID COMMON SECTION LINE,

S.89°48'22"W., A DISTANCE OF 1,071.71 FEET TO THE SOUTHWEST CORNER OF SAID TRACT HEREIN DESCRIBED, THE POINT OF BEGINNING AND CONTAINING AN AREA OF 7.37 ACRES, MORE OR LESS (320,985.22 SQ.FT., MORE OR LESS).

DOCUMENT(S) USED:

TITLE SEARCH REPORT identified as File Number: TR150006 with Effective Dates of Search From: April 18, 1955 To: February 20, 2015 at 8:00A.M.

INDENTURE between John G. White and Isabelle Gallegos, dated April 13, 1955 and recorded April 18, 1955 in Book 101 Miscl., at page 466, records of Santa Fe County, New Mexico.

WARRANTY DEED from Isabelle Gallegos, a single woman to John G. White, dated June 23, 1968 and recorded July 16, 1958 in Book 146 Miscl., at page 105, records of Santa Fe County, New Mexico.

WARRANTY DEED from John G. White to John Frank White, dated December 23, 1958 and recorded February 13, 1959 in Book 153 Miscl., at page 149, records of Santa Fe County, New Mexico.

QUITCLAIM DEED from John G. White to Daniel J. White, dated October 28, 1964 and recorded April 24, 1974 in Book 310 Miscl., at page 981, records of Santa Fe County, New Mexico.

QUITCLAIM DEED from John G. White to Adam J. White, dated October 28, 1964 and recorded April 24, 1974 in Book 310 Miscl., at page 982, records of Santa Fe County, New Mexico.

WARRANTY DEED from John F. White to Matilda Marie White and children Donna, Dorian and Frank White, dated April 7, 1975 and recorded April 11, 1975 in Book 321 Miscl., at page 9, records of Santa Fe County, New Mexico.

QUITCLAIM DEED from John G. White to Daniel J. White, dated November 13, 1975 and recorded November 13, 1975 in Book 328 Miscl., at page 267, records of Santa Fe County, New Mexico.

QUITCLAIM DEED from John G. White to Adam J. White, dated November 13, 1975 and recorded November 13, 1975 in Book 328 Miscl., at page 268, records of Santa Fe County, New Mexico.

PLAT OF SURVEY "SW 1/4 Section 17 T14N R8E NMPM, portions of the Roy Green Homestead, County of Santa Fe, Town of Cerrillos, New Mexico", recorded October 1, 1980 as Instrument #465302 in Plat Book 85 at page 10, records of Santa Fe County, New Mexico.

PLAT OF SURVEY entitled "Cerrillos Water System", recorded July 27, 1989 as Instrument #684187 in Plat Book 200 at page 25, records of Santa Fe County, New Mexico.

PLAT OF SURVEY entitled "Boundary Survey Plat of the Los Cerrillos Traditional Community Boundaries Prepared for the County of Santa Fe", recorded October 28, 1999 as Instrument #1095165 in Plat Book 427 at page 29, records of Santa Fe County, New Mexico.

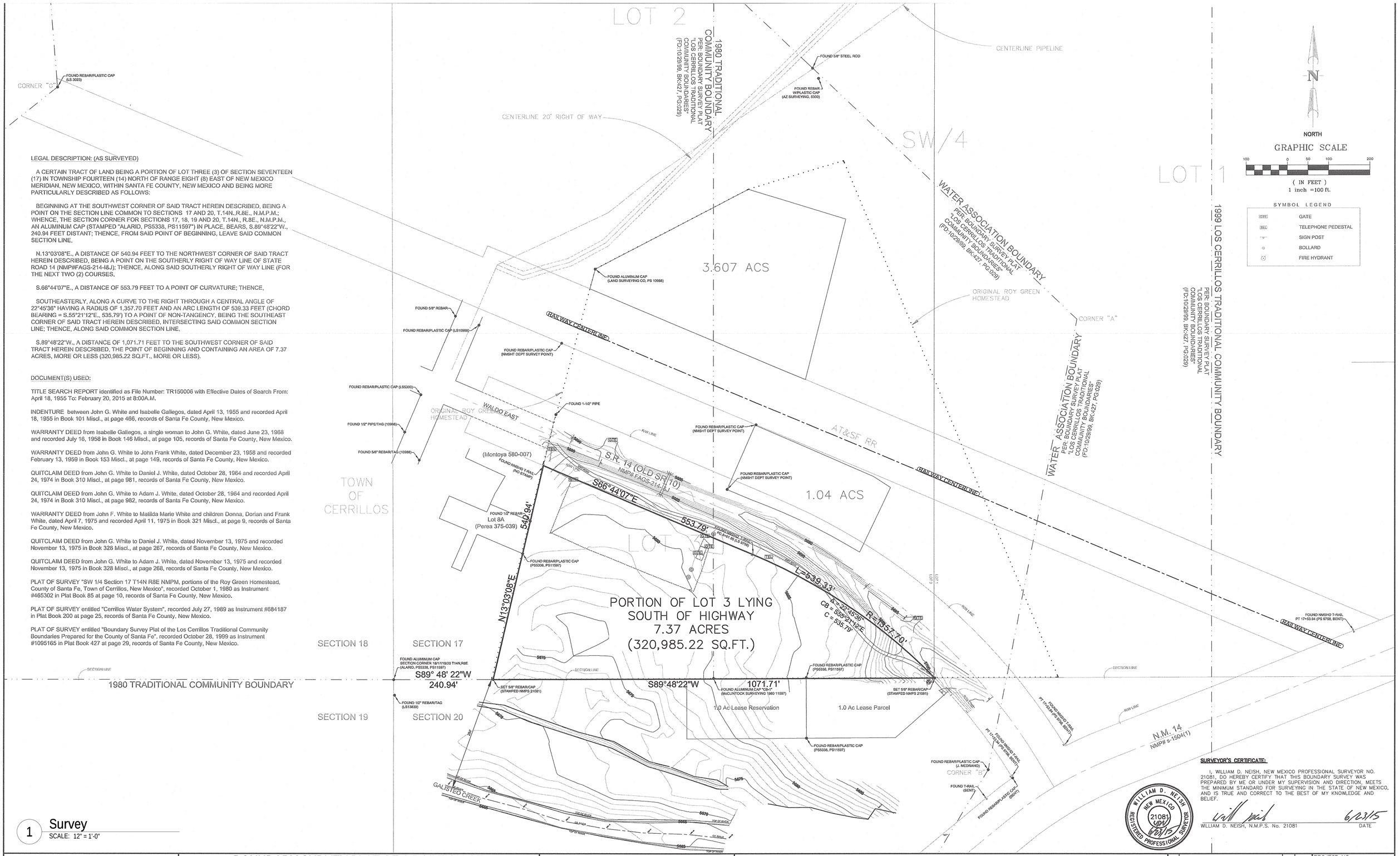

1 Survey
SCALE: 12" = 1'-0"

SURVEYOR'S CERTIFICATE:

I, WILLIAM D. NEISH, NEW MEXICO PROFESSIONAL SURVEYOR NO. 21081, DO HEREBY CERTIFY THAT THIS BOUNDARY SURVEY WAS PREPARED BY ME OR UNDER MY SUPERVISION AND DIRECTION, MEETS THE MINIMUM STANDARD FOR SURVEYING IN THE STATE OF NEW MEXICO, AND IS TRUE AND CORRECT TO THE BEST OF MY KNOWLEDGE AND BELIEF.

WILLIAM D. NEISH, N.M.P.S. No. 21081 — DATE 6/23/15

DRAWN PAJ 04/02/2015 DATE	CHECKED WN 04/02/2015 DATE	BOUNDARY SURVEY PLAT OF A PORTION OF LOT 3, SECTION 17, T.14N., R.8E., N.M.P.M.	WILSON & COMPANY 4900 Lang Avenue, N.E. Albuquerque, New Mexico 87109 PH (505) 348-4000 FAX (505) 348-4055 www.wilsonco.com
DESIGNED DATE	PROJECT ENGINEER	SANTA FE COUNTY, NEW MEXICO	
APPROVED DATE	PROJECT MANAGER		

EXISTING CONDITIONS in LOT 3, SECTION 17
SECTION 17, T.14N., R.8E., N.M.P.M.
SANTA FE COUNTY, NEW MEXICO

NO.	REVISIONS	BY	DATE

PROJECT NO. 13-300-012-04
SHEET NO. G0.3 1 of 1
FILE NAME: EXHIBIT-1
SCALE: 1"=100'

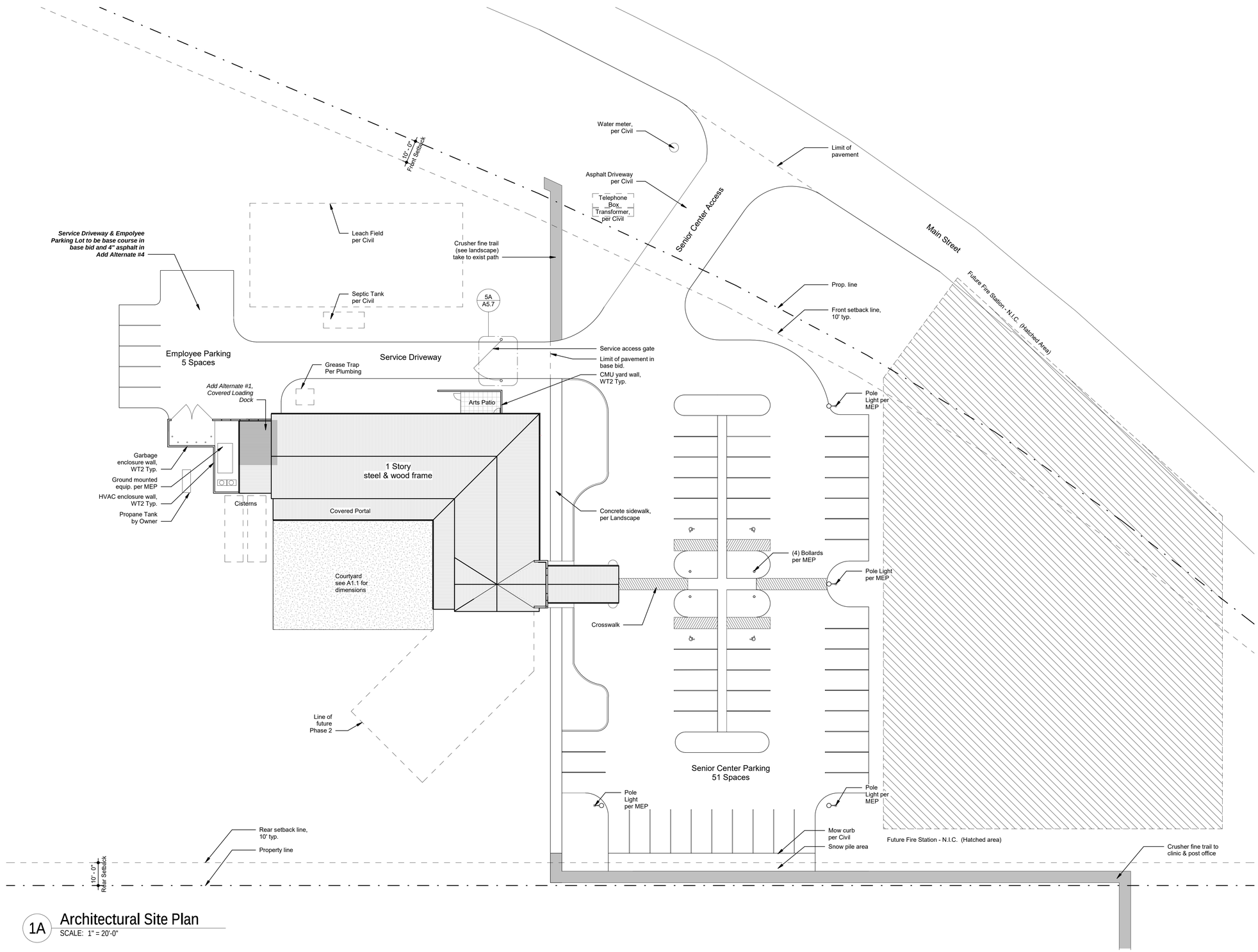

1A Architectural Site Plan
SCALE: 1" = 20'-0"

STATE OF NEW MEXICO
Alexander C. Dzurec
NO. 003942
11/29/17
REGISTERED ARCHITECT

autotroph
architecture.planning.sustainable design consulting

No.	Description	Date

Hwy 14 Senior Center

Architectural Site Plan

Project Number	1606
Date	10.20.17
Drawn By	LMB
Checked By	AD

A1.0

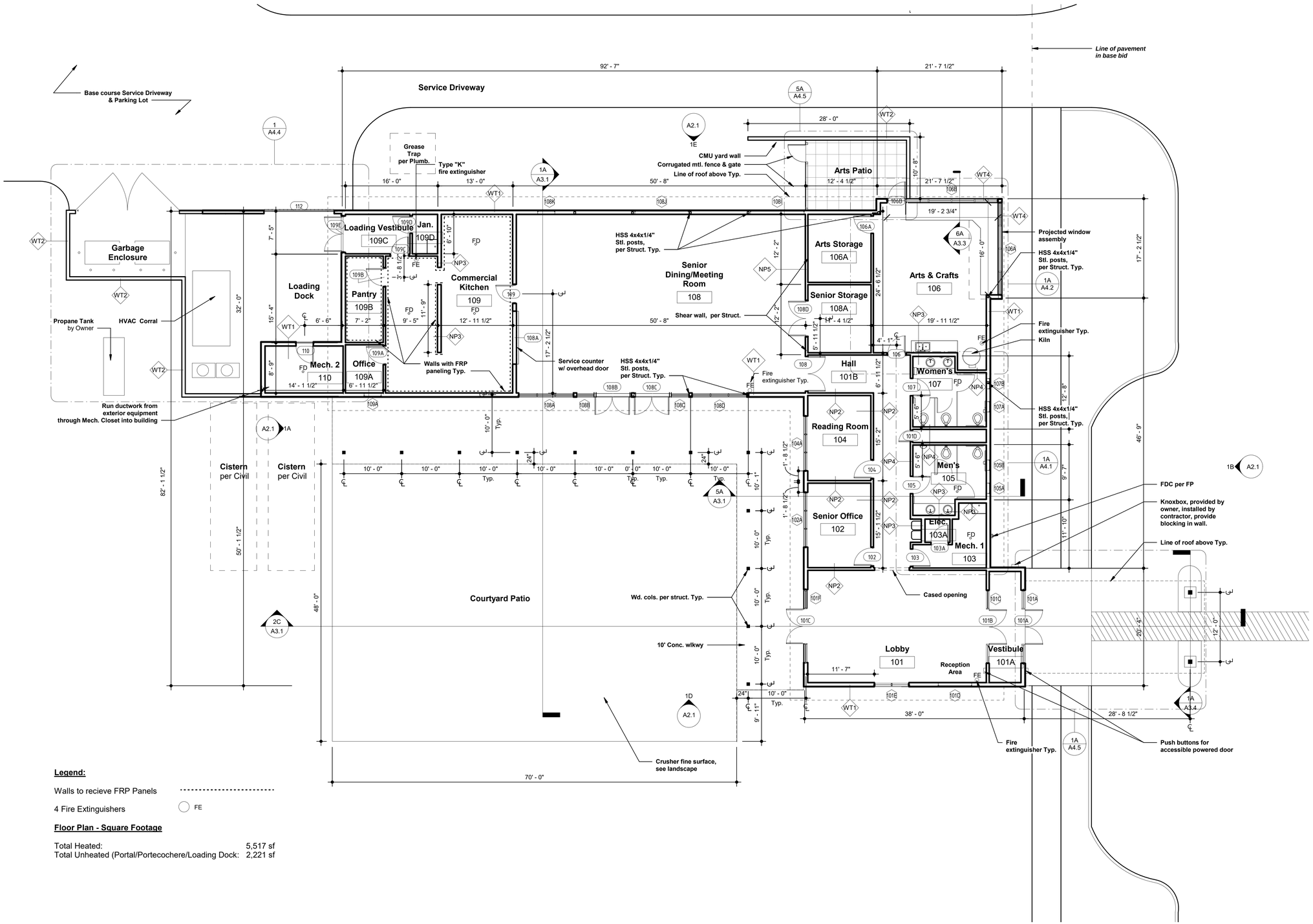

Legend:

Walls to recieve FRP Panels

4 Fire Extinguishers FE

Floor Plan - Square Footage

Total Heated:	5,517 sf
Total Unheated (Portal/Portecochere/Loading Dock:	2,221 sf

1A Floor Plan
SCALE: 1/8" = 1'-0"

SHEET NOTES:

1. Interior Wall Types in Floor Plan are assumed to be Type NP1 unless called out as otherwise, see Dtl. 1A/A5.2.
2. All dimensions are to face of stud unless otherwise noted.
3. Door jambs are 4" from perpendicular wall unless dimensioned otherwise noted.

STATE OF NEW MEXICO
Alexander C. Dzurec
NO. 003942
11/29/17
REGISTERED ARCHITECT

autotroph
architecture.planning.sustainable design consulting

No.	Description	Date

Hwy 14 Senior Center

Floor Plan - Base Bid

Project Number	1606
Date	10.20.17
Drawn By	LMB
Checked By	AD

A1.1

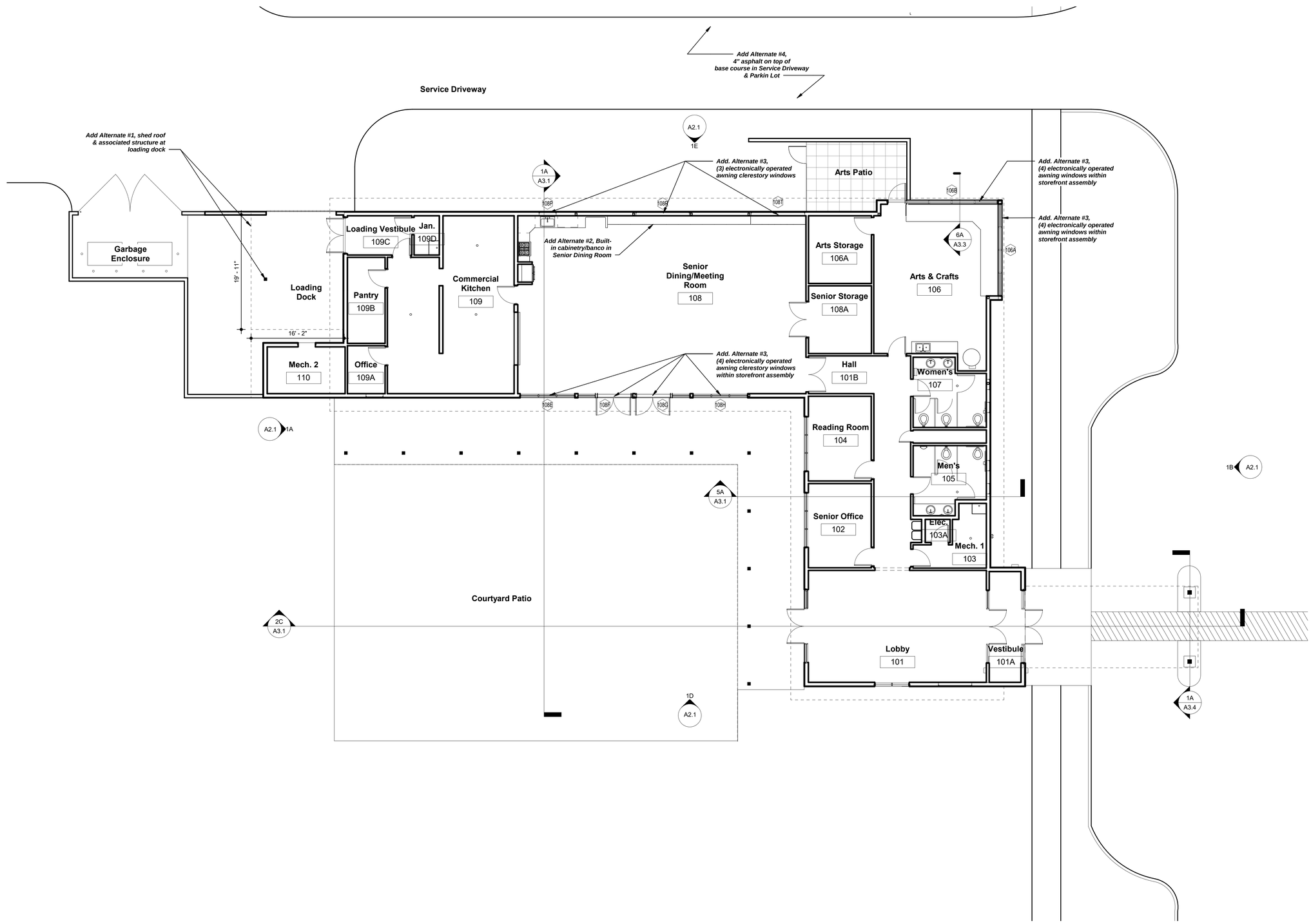

1 Floor Plan - Add Alternates

SCALE: 1/8" = 1'-0"

ADDITIVE ALTERNATES:

Additive Alternate #1:
Shed roof over Loading Dock in Service Area. Wd. Post, beams and associated foundation.

Additive Alternate #2:
Casework and cabinetry along North wall of Senior Dining. See A4.3 for details.

Additive Alternate #3:
(15) Electronically operated awning windows. See A4.2 for locations in Arts Center. See 1B & 1E/A2.1 - Elevations for locations of operable awning windows in Senior Dining. Basis of design: see mechanical specs.

Additive Alternate #4:
Replace 4" asphalt in service driveway and parking lot with base course & gravel.

DEDUCTIVE ALTERNATES:

Deductive Alternate #1:
Substitute wood framing for steel framing throughout.

STATE OF NEW MEXICO
Alexander C. Dzurec
NO. 003942
11/29/17
REGISTERED ARCHITECT

autotroph
architecture.planning.sustainable design consulting

No.	Description	Date

Hwy 14 Senior Center

Floor Plan - Alternates

Project Number	1606
Date	10.20.17
Drawn By	Author
Checked By	Checker

A1.2

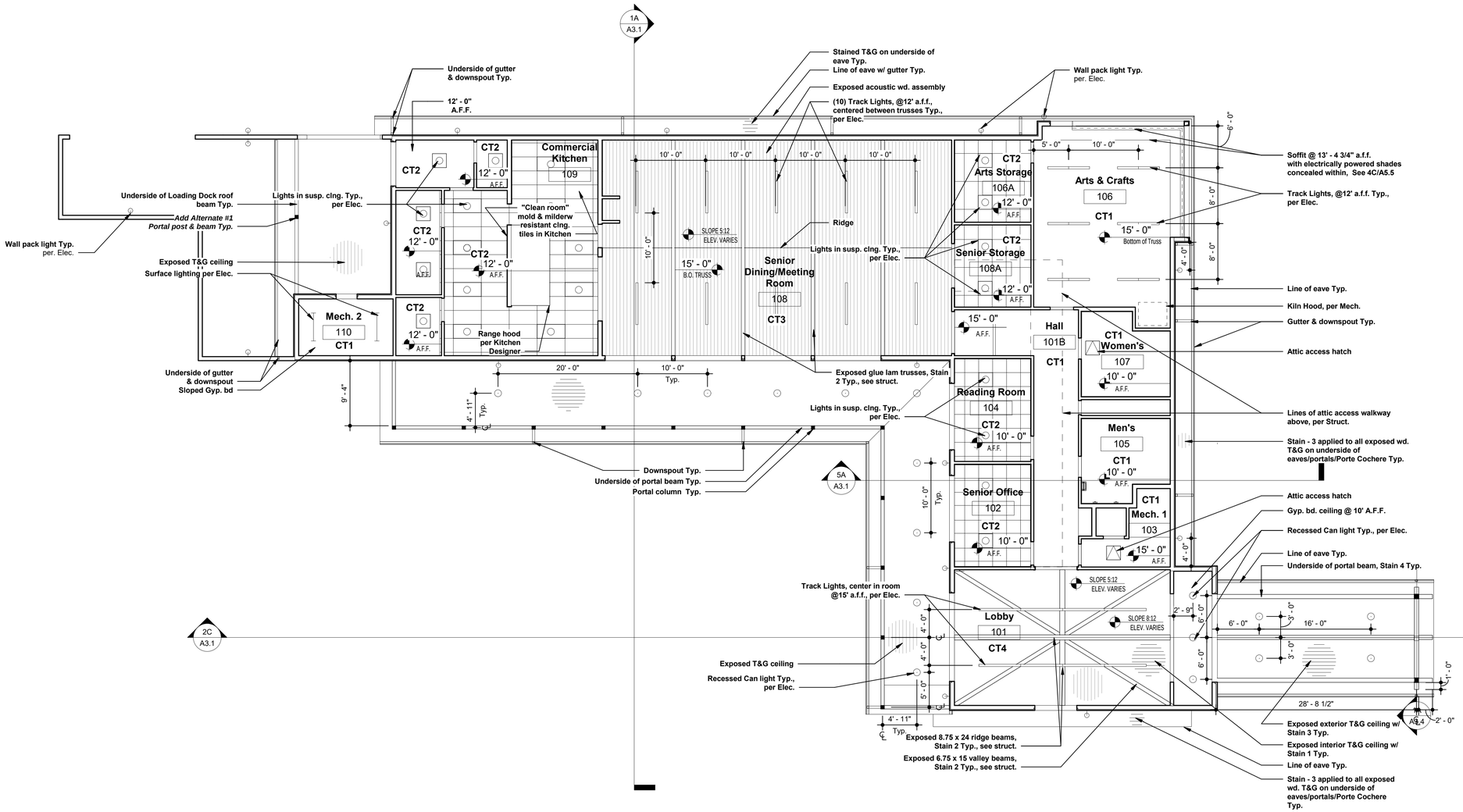

1A Reflected Ceiling Plan
SCALE: 1/8" = 1'-0"

SHEET NOTES:

1. Typ. gutter size of 6" with 3x4" downspouts.
2. Apply Stain - 4 to all exterior wd. columns and beams.
3. Apply Stain -3 to all exterior wd. T&G on underside of Portal, Porte Cochere and all eaves.

STATE OF NEW MEXICO
Alexander C. Dzurec
NO. 003942
11/29/17
REGISTERED ARCHITECT

autotroph
architecture.planning.sustainable design consulting

No.	Description	Date

Hwy 14 Senior Center

Reflected Ceiling Plan

Project Number	1606
Date	10.20.17
Drawn By	LMB
Checked By	AD

A1.3

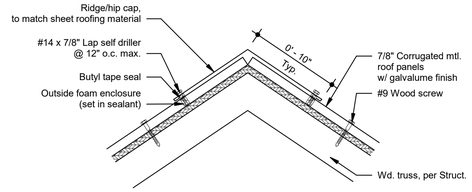

1E Detail - Roof Ridge

SCALE: 1 1/2" = 1'-0"

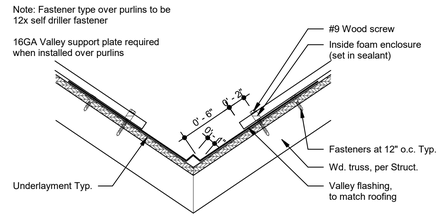

4E Detail - Roof Valley

SCALE: 1 1/2" = 1'-0"

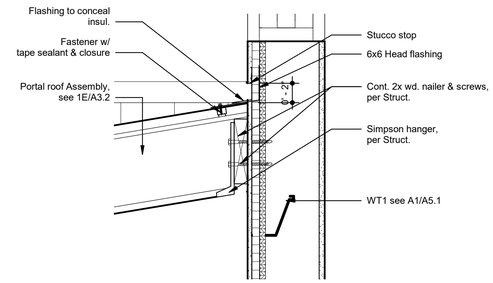

6E Portal/Portecochere Flashing Detail

SCALE: 1 1/2" = 1'-0"

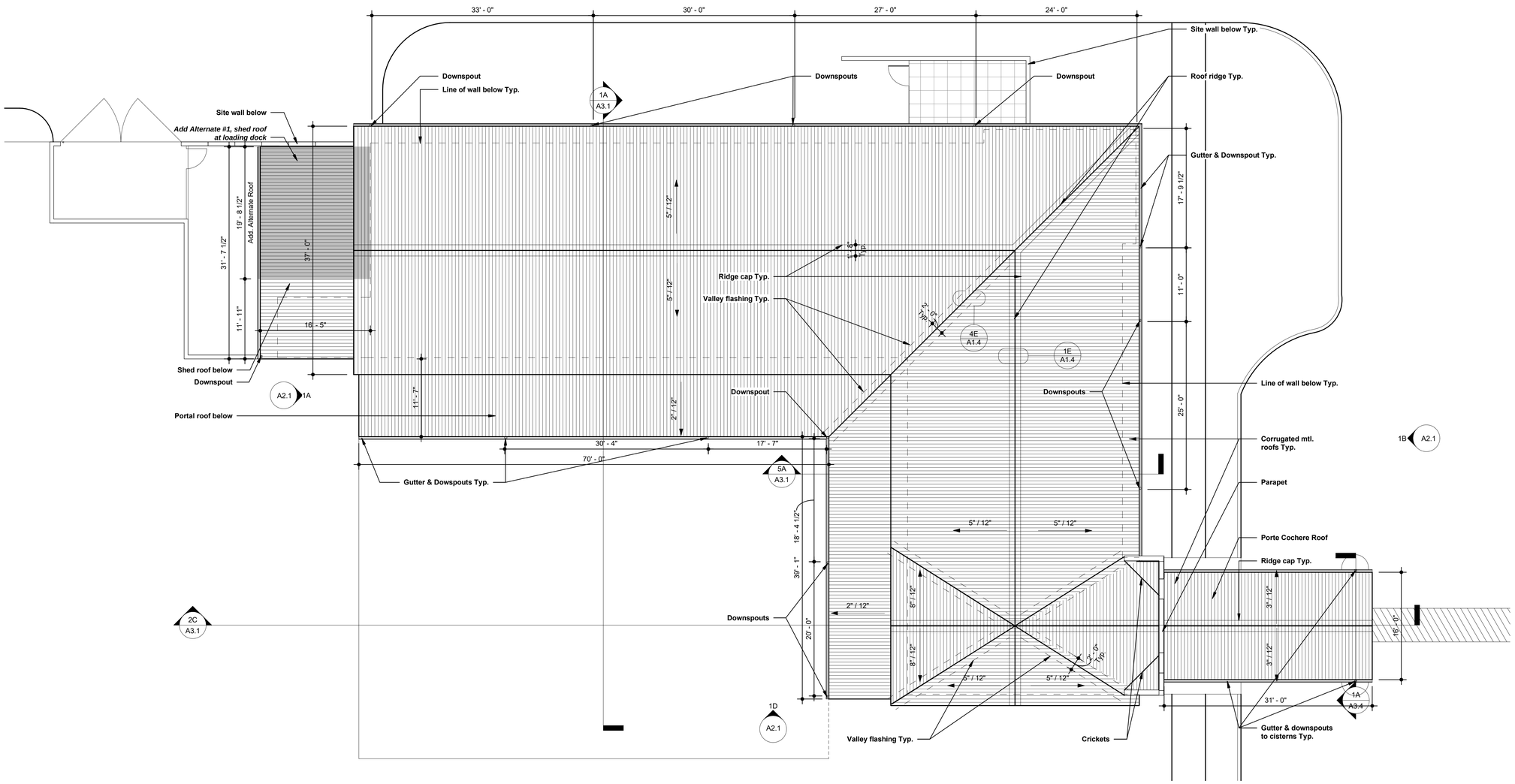

1A Roof Plan

SCALE: 1/8" = 1'-0"

SHEET NOTES:

1. Typ. gutter size of 6" with 3x4" downspouts.
2. Self-adhered roof underlayment throughout entire roof Typ..

STATE OF NEW MEXICO
Alexander C. Dzurec
NO. 003942
11/29/17
REGISTERED ARCHITECT

autotroph
architecture.planning.sustainable design consulting

No.	Description	Date

Hwy 14 Senior Center

Roof Plan

Project Number	1606
Date	10.20.17
Drawn By	LMB
Checked By	Checker

A1.4

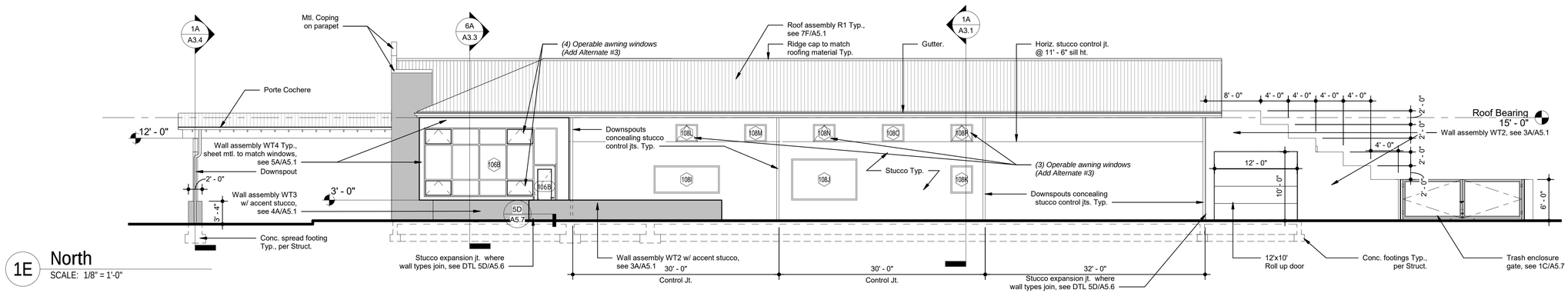

1E North
SCALE: 1/8" = 1'-0"

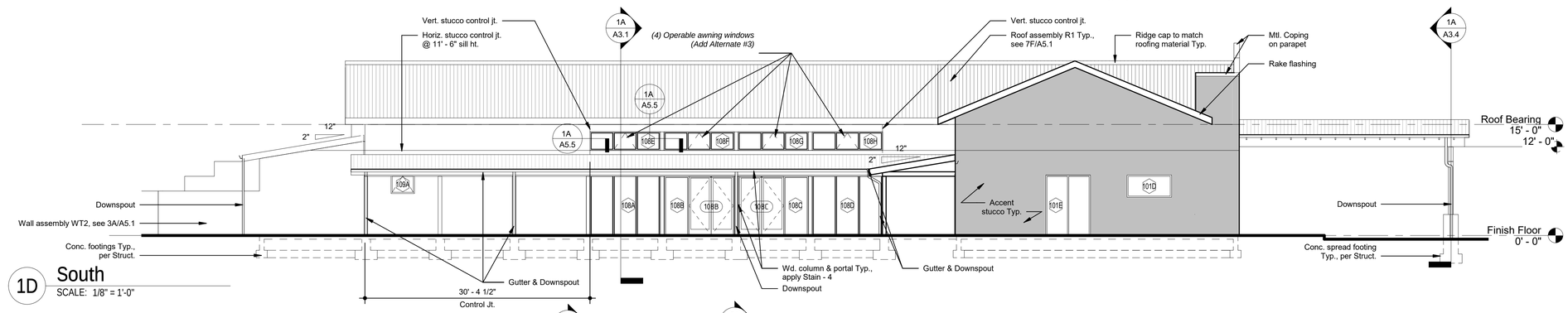

1D South
SCALE: 1/8" = 1'-0"

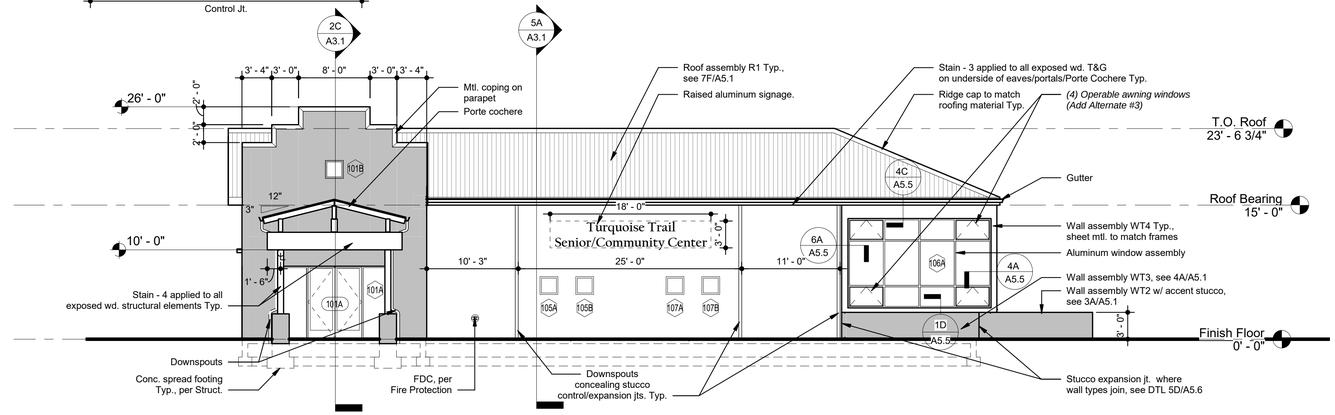

1B East
SCALE: 1/8" = 1'-0"

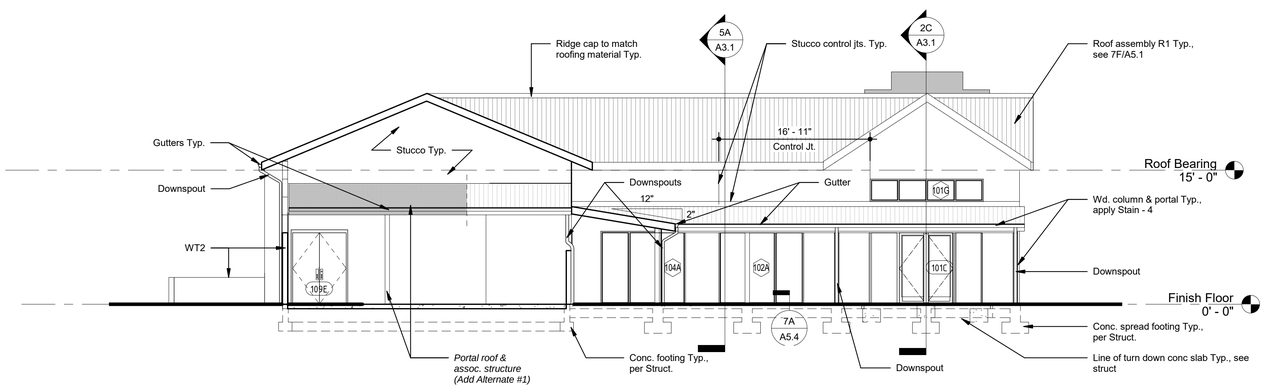

1A West
SCALE: 1/8" = 1'-0"

SHEET NOTES:

1. Typ. gutter size of 6" with 3x4" downspouts.
2. Apply Stain - 4 to all exterior wd. columns and beams.
3. Apply Stain -3 to all exterior wd. T&G on underside of Portal, Porte Cochere and all eaves.

STATE OF NEW MEXICO
Alexander C. Dzurec
NO. 003942
11/29/17
REGISTERED ARCHITECT

autotroph
architecture.planning.sustainable design consulting

No.	Description	Date

Hwy 14 Senior Center

Elevations

Project Number	1606
Date	10.20.17
Drawn By	LMB
Checked By	AD

A2.1

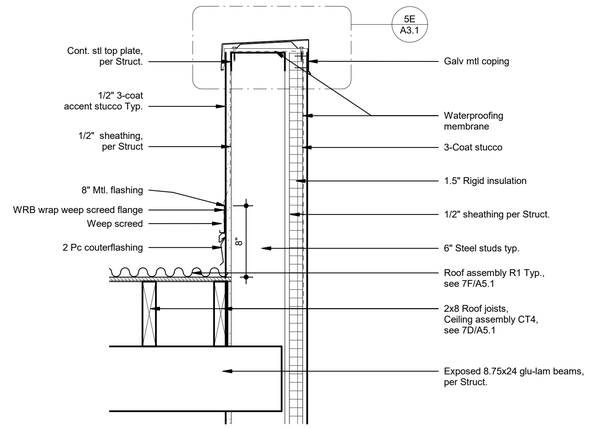

2E Parapet Detail
SCALE: 1 1/2" = 1'-0"

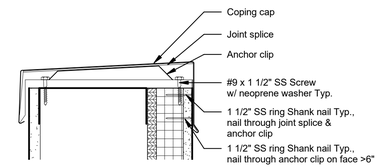

5E Coping Detail
SCALE: 3" = 1'-0"

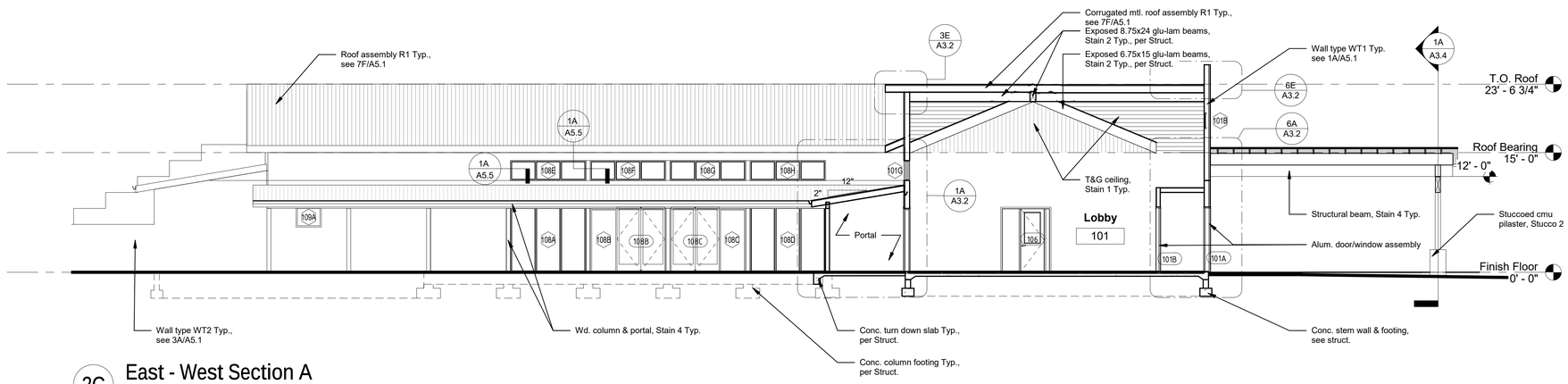

2C East - West Section A
SCALE: 1/8" = 1'-0"

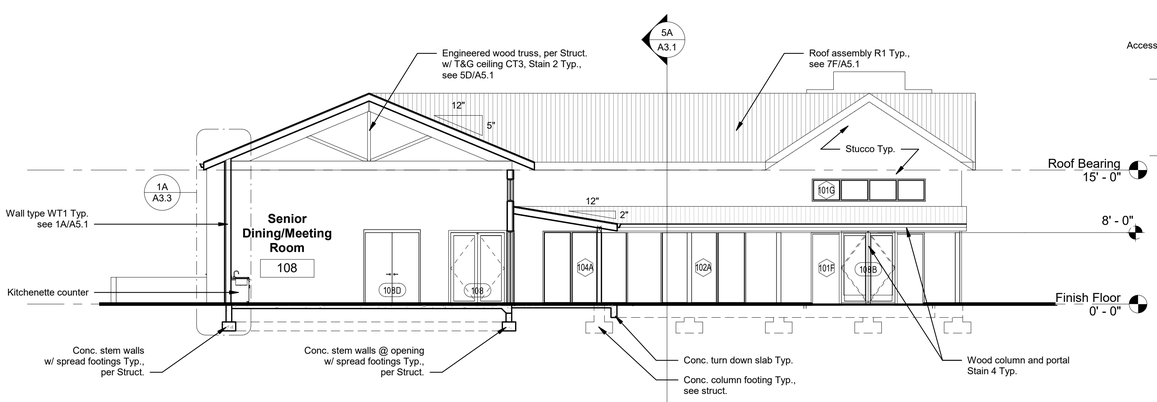

1A North - South Section
SCALE: 1/8" = 1'-0"

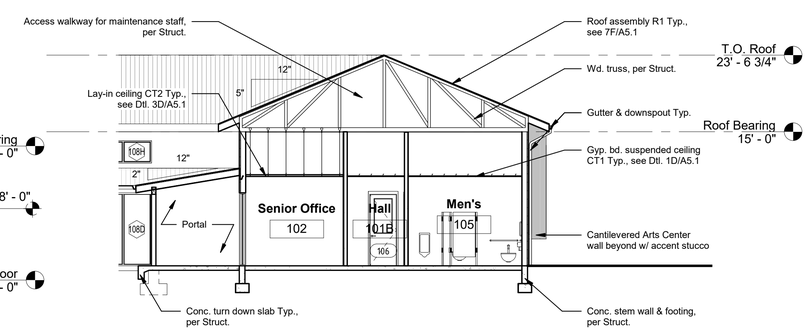

5A East - West Section B
SCALE: 1/8" = 1'-0"

SHEET NOTES:

1. Typ. gutter size of 6" with 3x4" downspouts.
2. Apply Stain - 4 to all exterior wd. columns and beams.
3. Apply Stain -3 to all exterior wd. T&G on underside of Portal, Porte Cochere and all eaves.

STATE OF NEW MEXICO
Alexander C. Dzurec
NO. 003942
11/29/17
REGISTERED ARCHITECT

autotroph
architecture.planning.sustainable design consulting

No.	Description	Date

Hwy 14 Senior Center

Building Sections

Project Number	1606
Date	10.20.17
Drawn By	LMB
Checked By	AD

A3.1

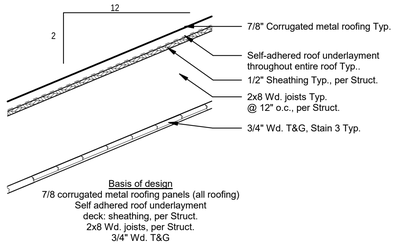

1E Portal/Portecochere Roof Assembly

SCALE: 1 1/2" = 1'-0"

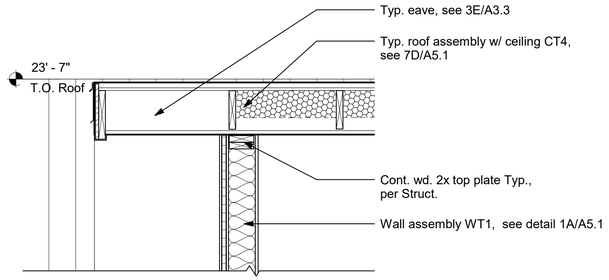

3E Wall Section 1 Top

SCALE: 3/4" = 1'-0"

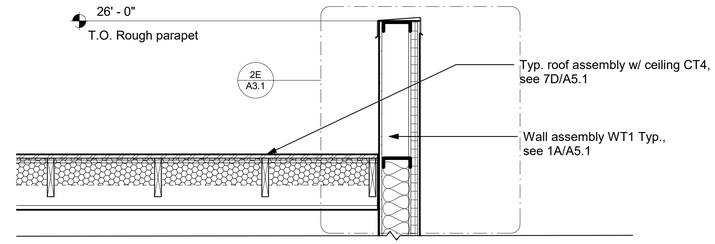

6E Wall Section 2 Top

SCALE: 3/4" = 1'-0"

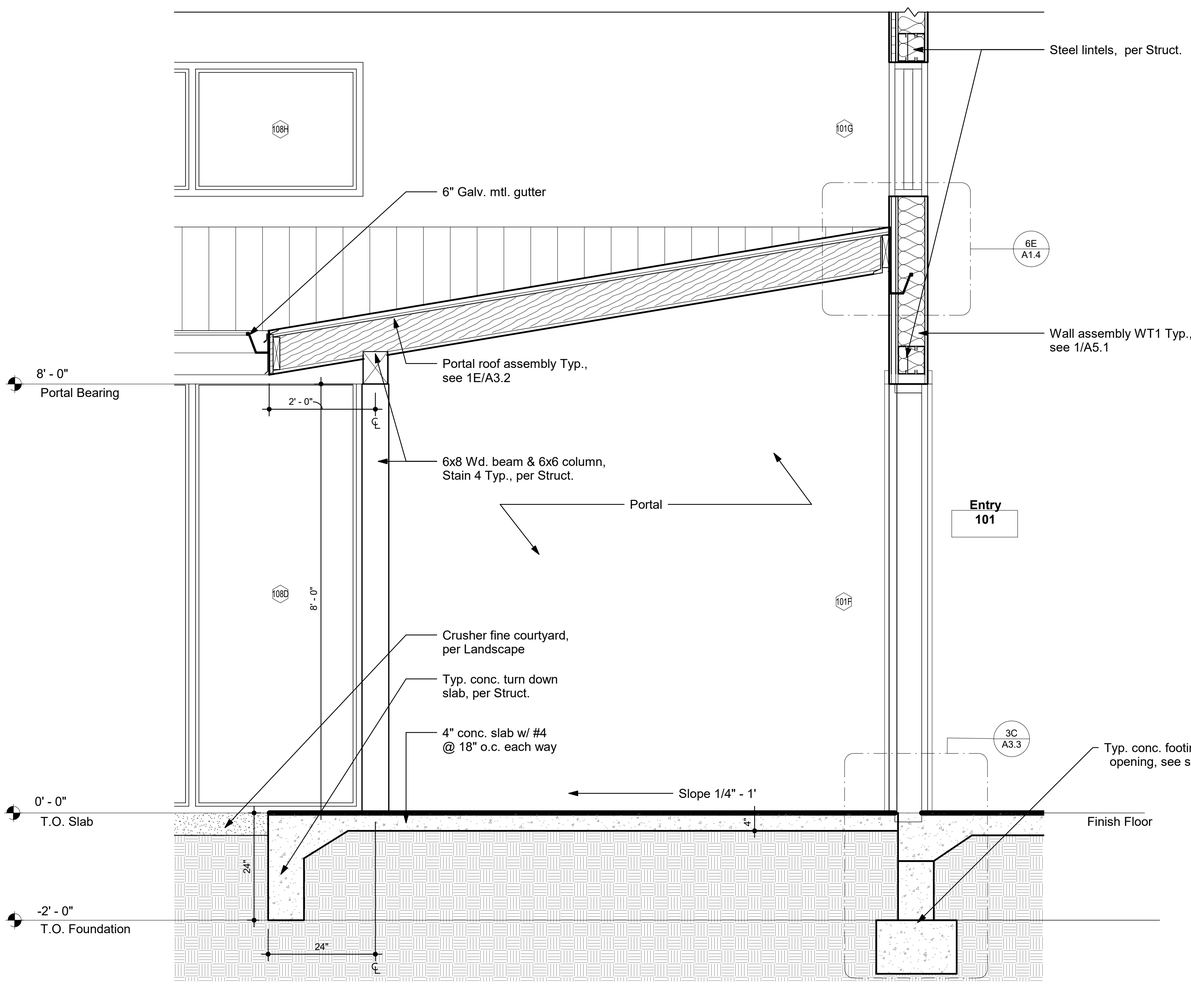

1A Wall Section 1

SCALE: 3/4" = 1'-0"

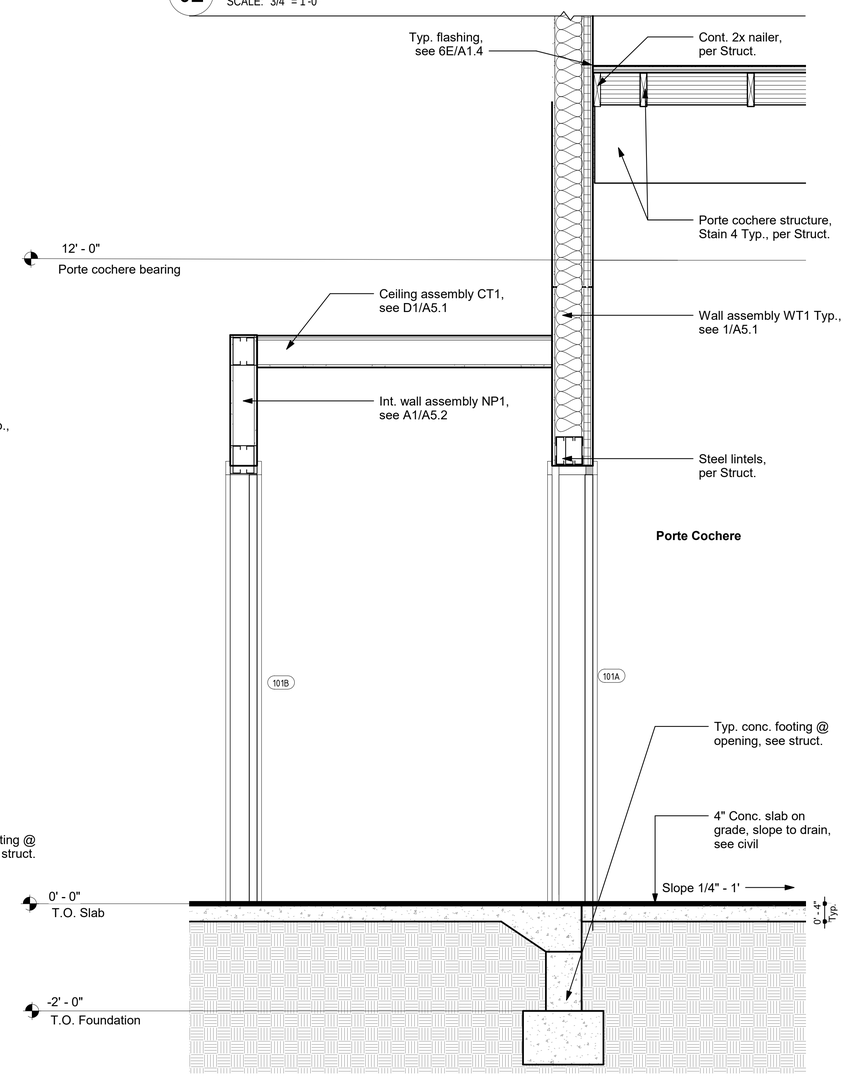

6A Wall Section 2

SCALE: 3/4" = 1'-0"

STATE OF NEW MEXICO
Alexander C. Dzurec
NO. 003942
11/29/17
REGISTERED ARCHITECT

autotroph
architecture.planning.sustainable design consulting

No.	Description	Date

Hwy 14 Senior Center

Wall Sections

Project Number	1606
Date	10.20.17
Drawn By	LMB
Checked By	Checker

A3.2

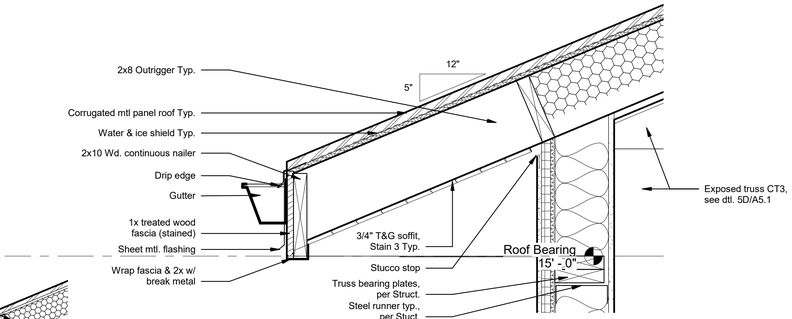

3E Section Detail - Typ. Eave

SCALE: 1 1/2" = 1'-0"

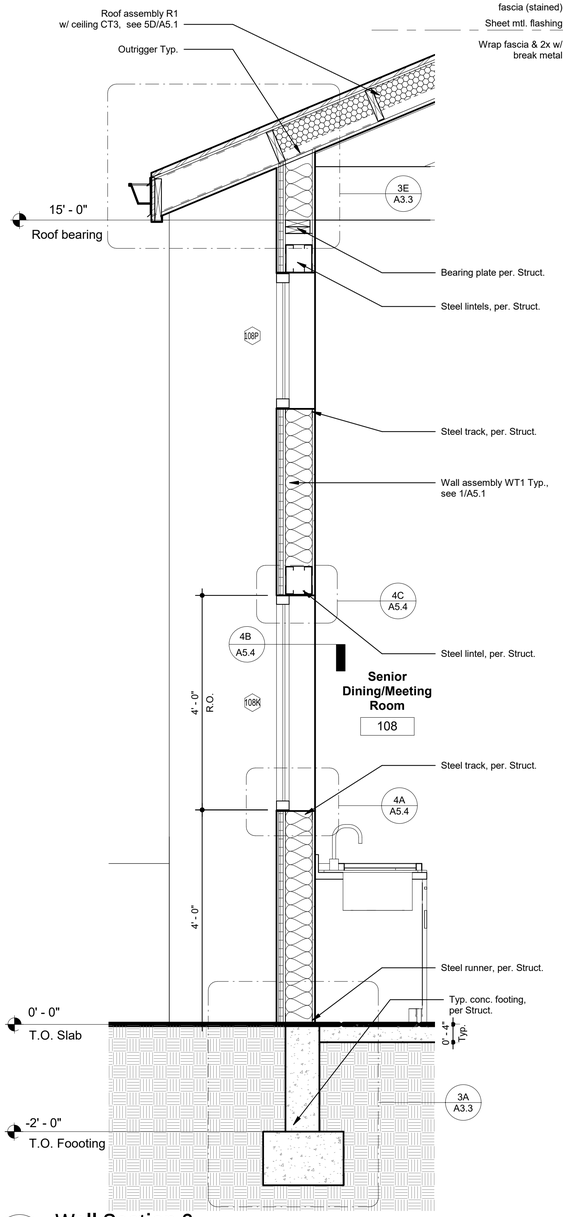

1A Wall Section 3

SCALE: 3/4" = 1'-0"

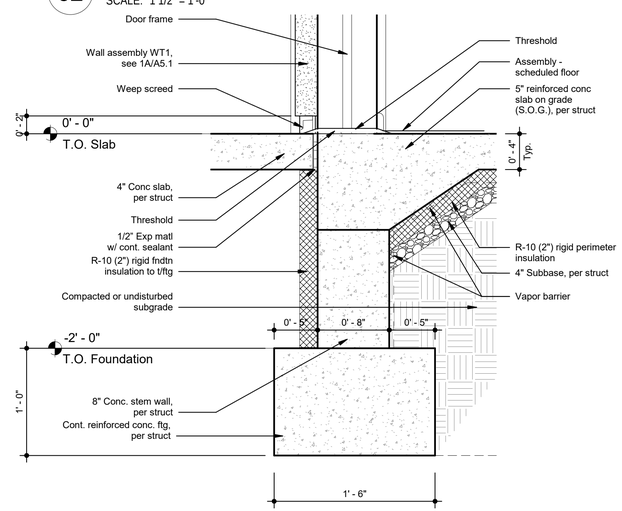

3C Foundation Detail @ Opening

SCALE: 1 1/2" = 1'-0"

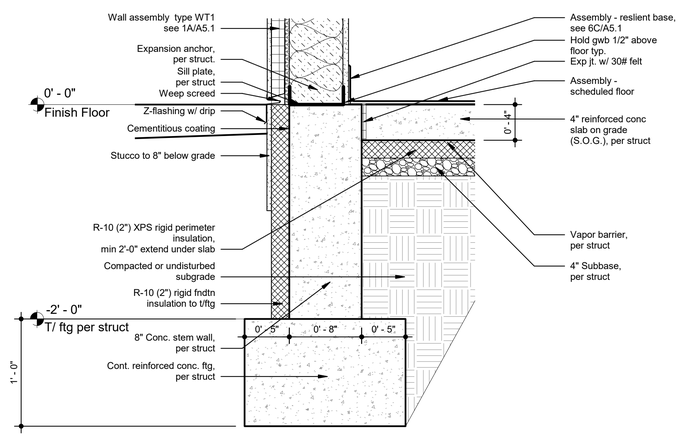

3A Foundation Detail

SCALE: 1 1/2" = 1'-0"

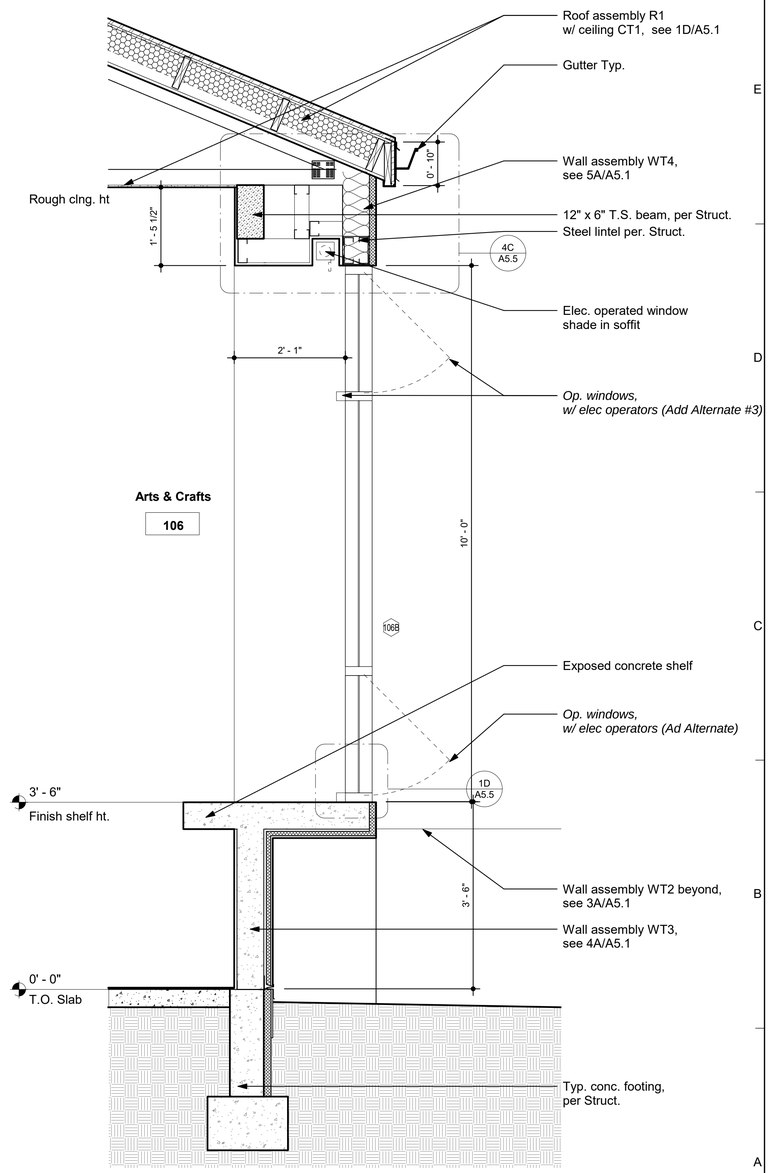

6A Wall Section 4

SCALE: 3/4" = 1'-0"

STATE OF NEW MEXICO
Alexander C. Dzurec
NO. 003942
11/29/17
REGISTERED ARCHITECT

autotroph
architecture.planning.sustainable design consulting

No.	Description	Date

Hwy 14 Senior Center

Wall Sections

Project Number	1606
Date	10.20.17
Drawn By	LMB
Checked By	AD

A3.3

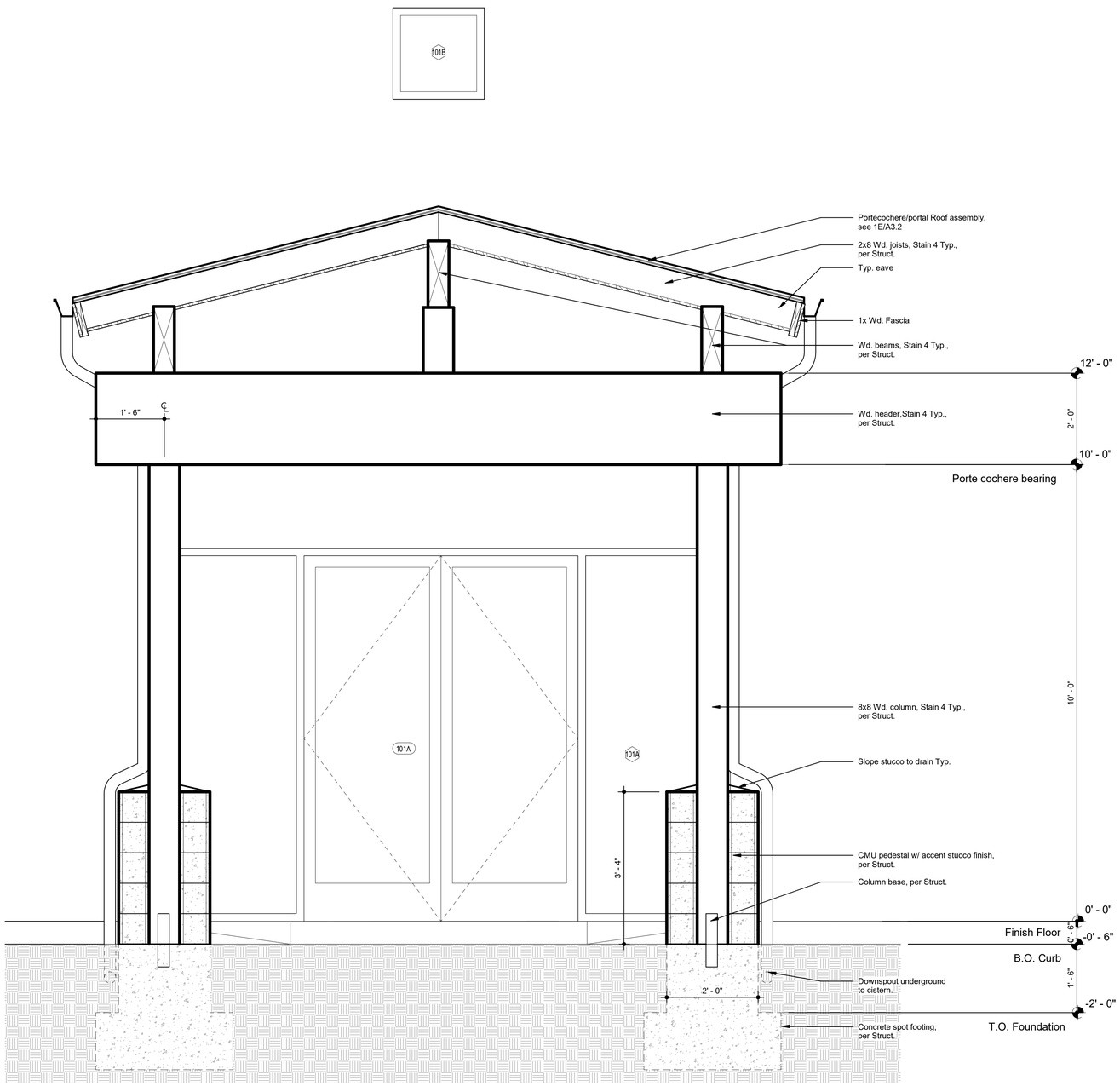

1A Section - Porte Cochere
SCALE: 3/4" = 1'-0"

SHEET NOTES:

1. Typ. gutter size of 6" with 3x4" downspouts.
2. Apply Stain - 4 to all exterior wd. columns and beams.
3. Apply Stain -3 to all exterior wd. T&G on underside of Portal, Porte Cochere and all eaves.

STATE OF NEW MEXICO
Alexander C. Dzurec
NO. 003942
11/29/17
REGISTERED ARCHITECT

autotroph
architecture.planning.sustainable design consulting

No.	Description	Date

Hwy 14 Senior Center

Wall Sections

Project Number	1606
Date	10.20.17
Drawn By	Author
Checked By	Checker

A3.4

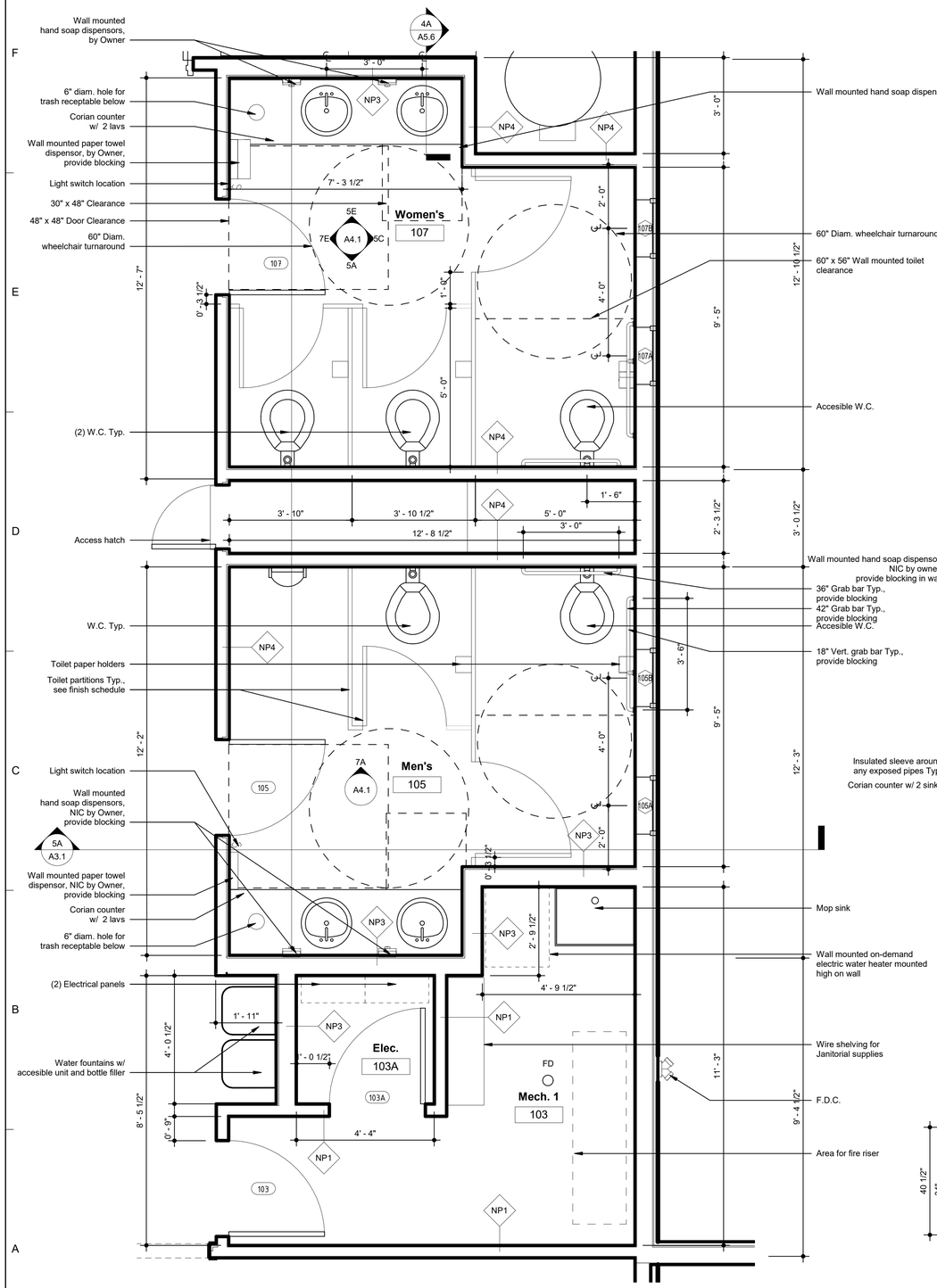

1A Enlarged Plan - Rest Rooms & Mech.
SCALE: 1/2" = 1'-0"

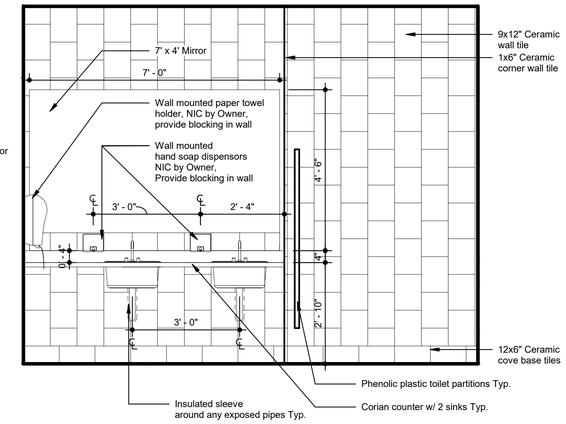

5E Interior Elevation Rm.107 - North
SCALE: 1/2" = 1'-0"

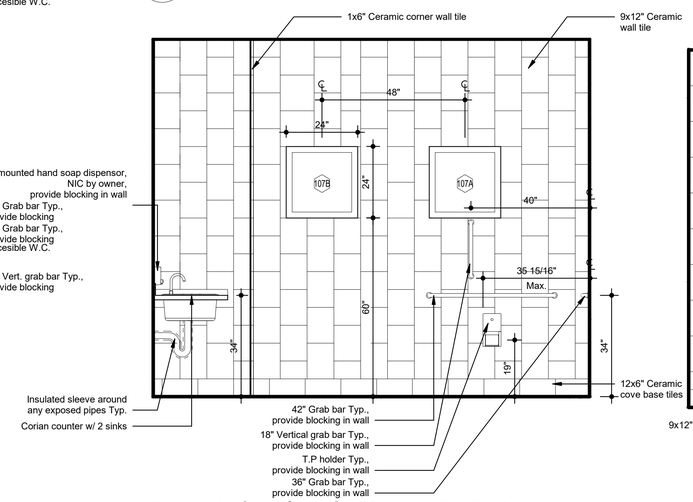

5C Interior Elevation Rm. 107 - East
SCALE: 1/2" = 1'-0"

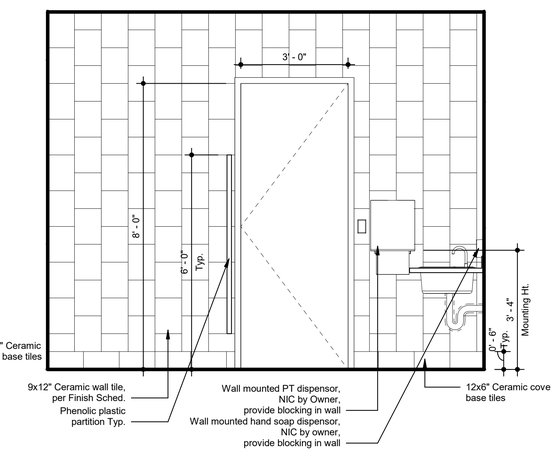

7E Interior Elevation Rm.107 - West
SCALE: 1/2" = 1'-0"

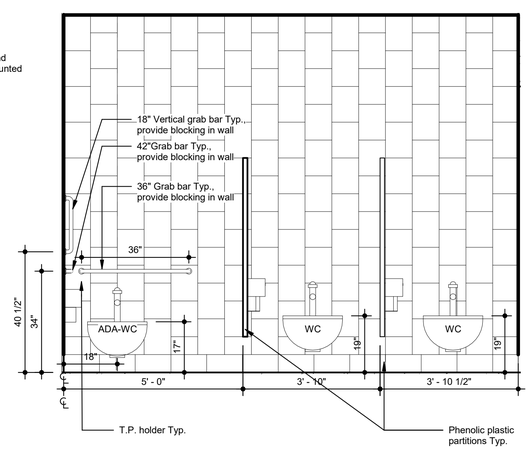

5A Interior Elevation Rm.107 - South
SCALE: 1/2" = 1'-0"

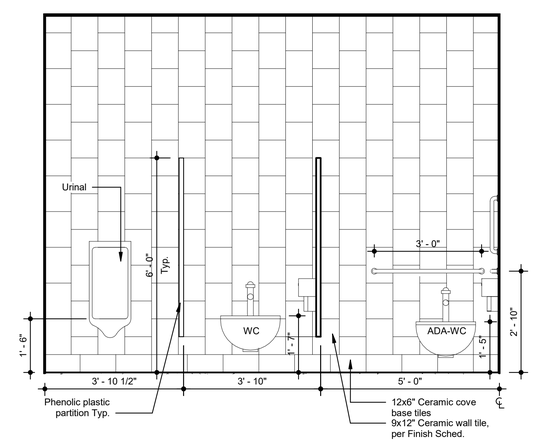

7A Interior Elevation Rm.105 - North
SCALE: 1/2" = 1'-0"

NOTES:

1. Provide grab bar blocking, see 6C/A5.6.
2. Accessory and fixture dimensions are to finish face of wall.

STATE OF NEW MEXICO
Alexander C. Dzurec
NO. 003942
11/29/17
REGISTERED ARCHITECT

autotroph
architecture.planning.sustainable design consulting

No.	Description	Date

Hwy 14 Senior Center

Enlarged Plans - Restrooms

Project Number	1606
Date	10.20.17
Drawn By	LMB
Checked By	AD

A4.1

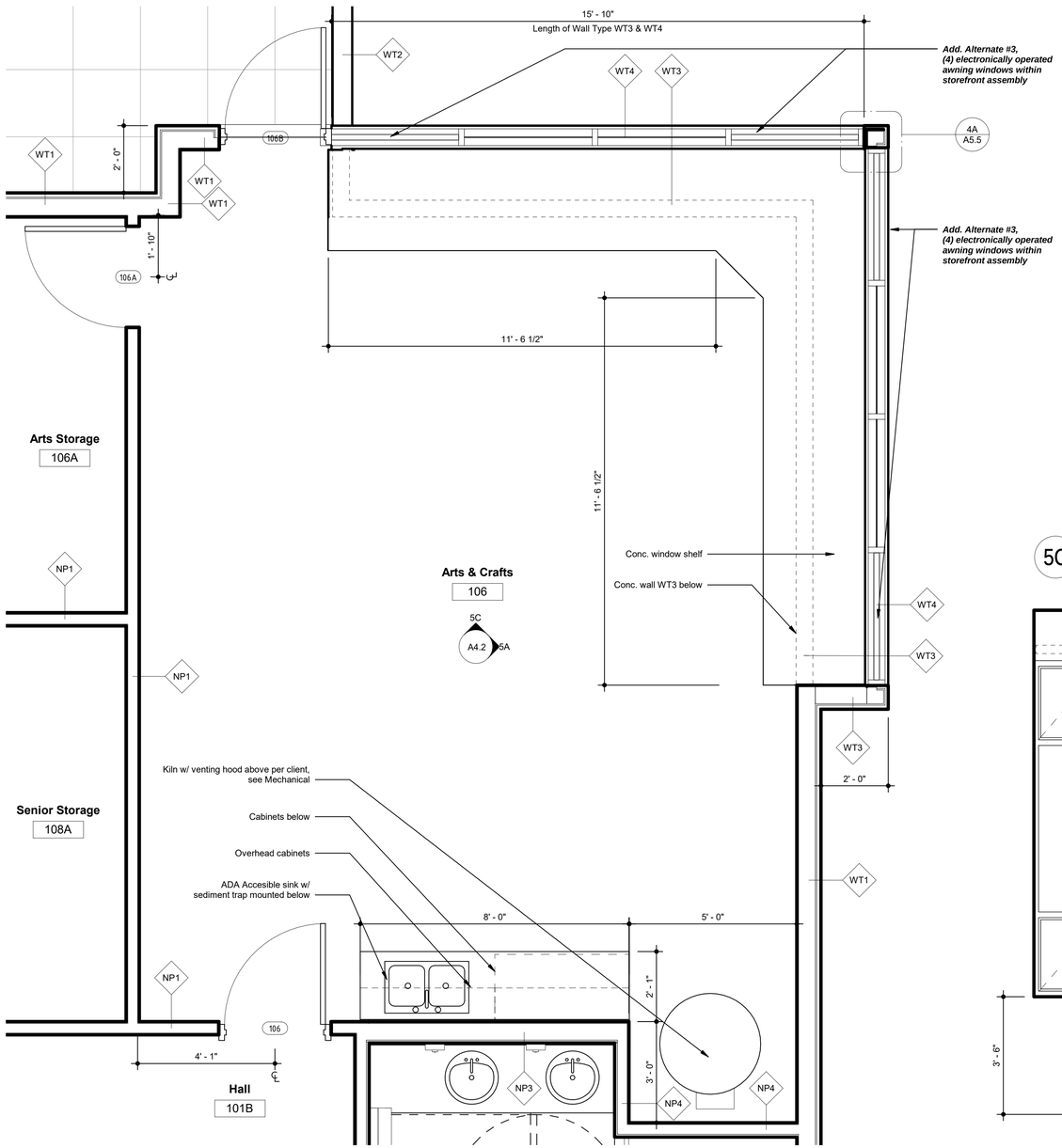

1A Enlarged Plan - Arts & Crafts
SCALE: 1/2" = 1'-0"

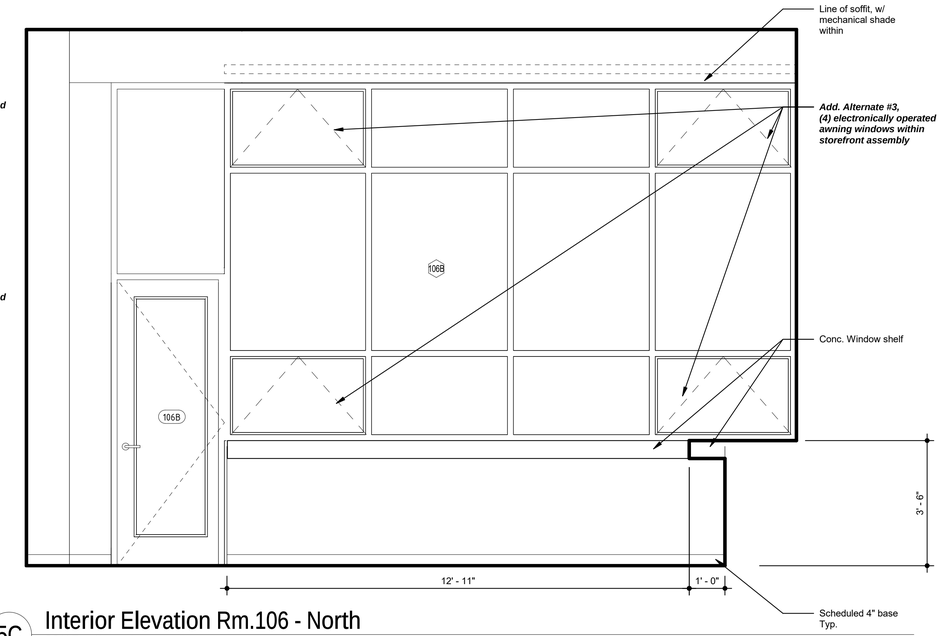

5C Interior Elevation Rm.106 - North
SCALE: 1/2" = 1'-0"

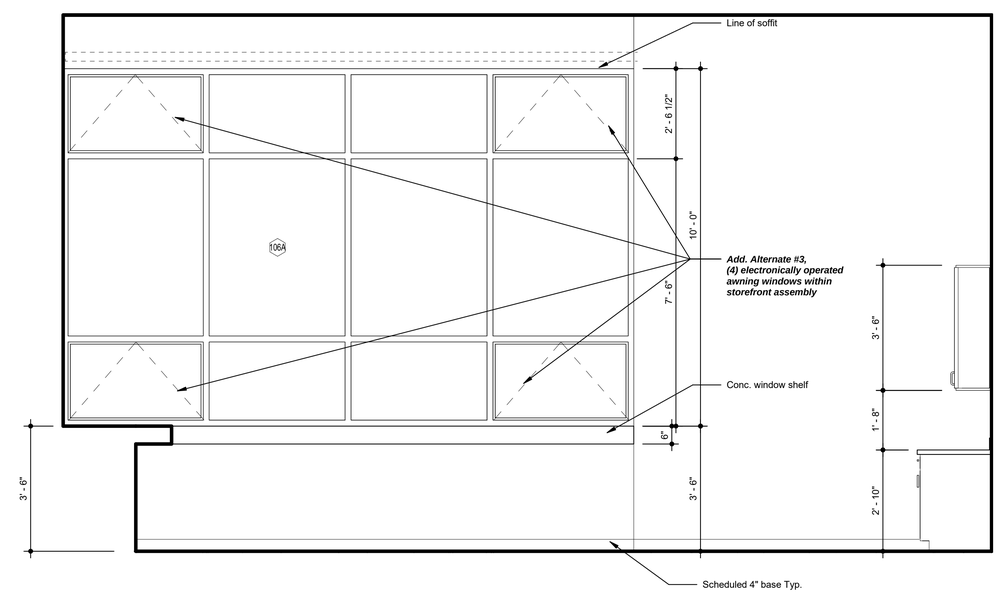

5A Interior Elevation Rm.106 - East
SCALE: 1/2" = 1'-0"

STATE OF NEW MEXICO
Alexander C. Dzurec
NO. 003942
11/29/17
REGISTERED ARCHITECT

autotroph
architecture.planning.sustainable design consulting

No.	Description	Date

Hwy 14 Senior Center

Enlarged Plan - Arts & Crafts

Project Number	1606
Date	10.20.17
Drawn By	Author
Checked By	Checker

A4.2

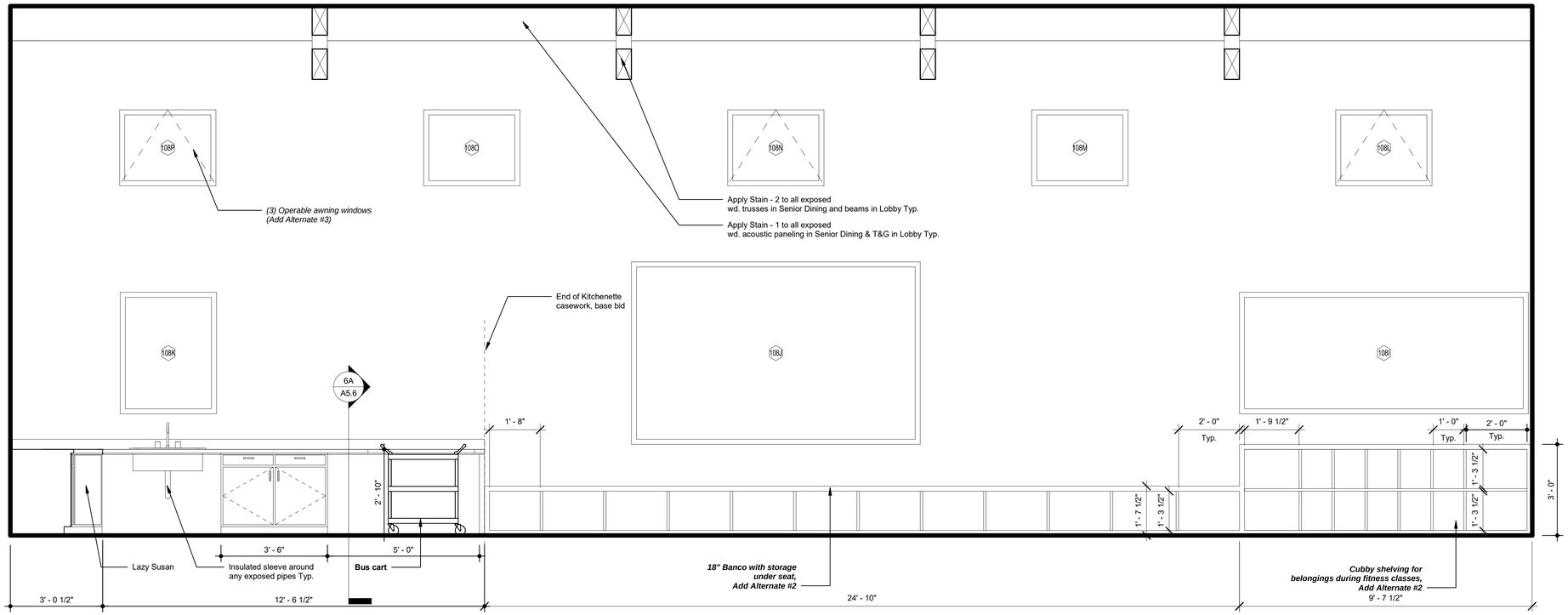

1D Interior Elevation - Senior Dining - North
SCALE: 1/2" = 1'-0"

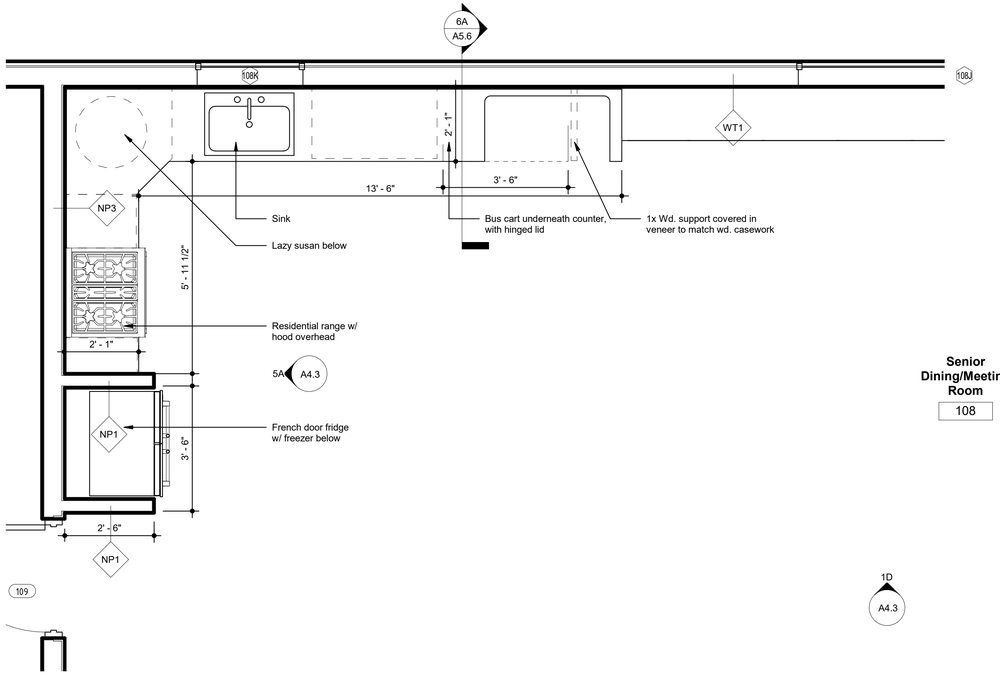

1A Enlarged Plan - Senior Dining
SCALE: 1/2" = 1'-0"

Senior Dining/Meeting Room
108

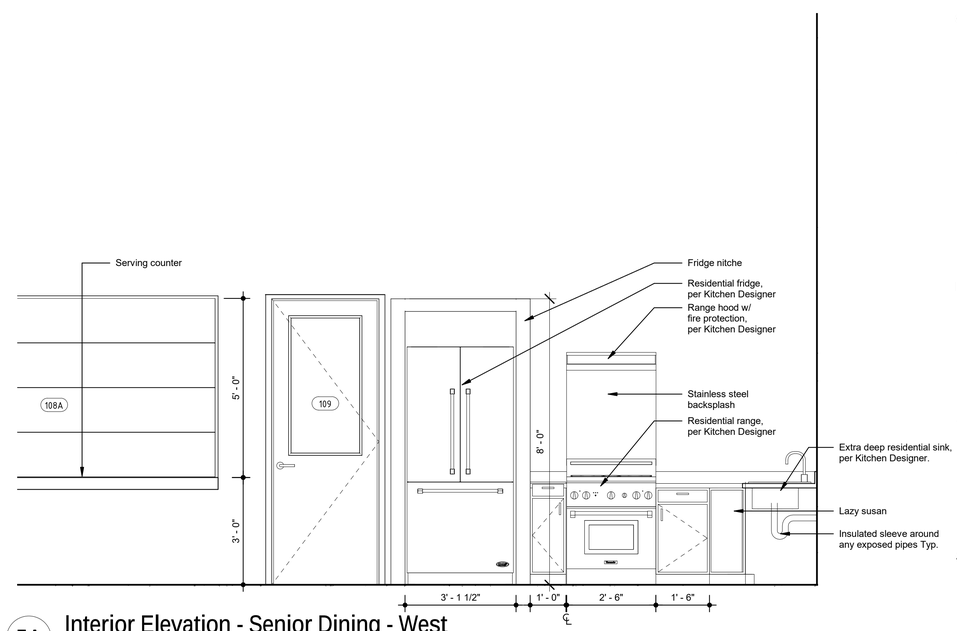

5A Interior Elevation - Senior Dining - West
SCALE: 1/2" = 1'-0"

SHEET NOTES:

1. Casework/Banco as Add Alternate #2.
2. Any casework associated with the Kitchenette included in base bid.
3. Apply Stain - 2 to all interior wd. trusses.
4. Apply Stain -1 to all interior wd. acoustic paneling in Senior Dining ceiling & T&G on underside of Lobby ceiling.

STATE OF NEW MEXICO
Alexander C. Dzurec
NO. 003942
11/29/17
REGISTERED ARCHITECT

autotroph
architecture.planning.sustainable design consulting

No.	Description	Date

Hwy 14 Senior Center

Enlarged Plans - Senior Dining

Project Number	1606
Date	10.20.17
Drawn By	LMB
Checked By	AD

A4.3

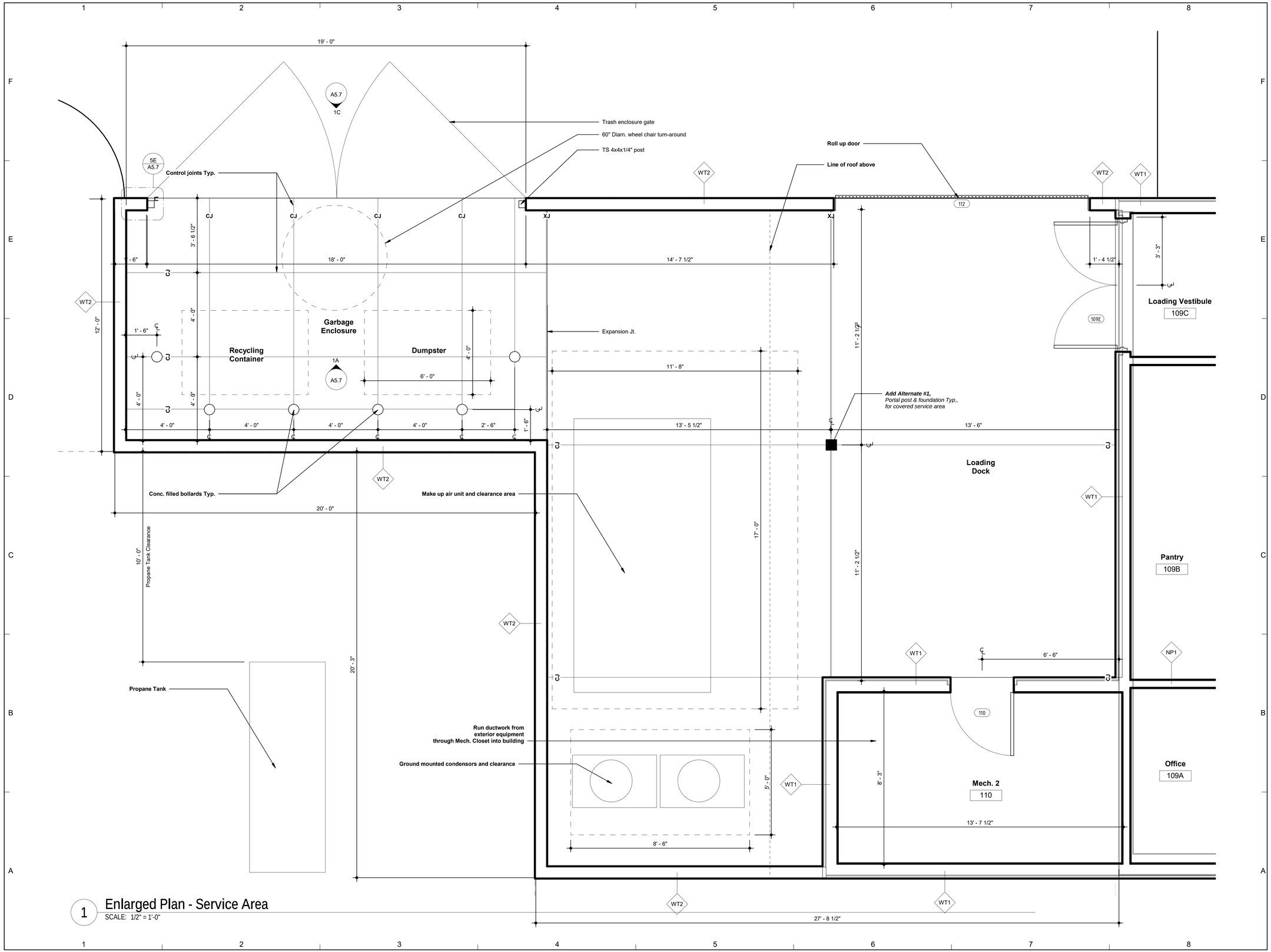

1 Enlarged Plan - Service Area
SCALE: 1/2" = 1'-0"

SHEET NOTES:

1. See Mech. for detailed equipment info & layout

STATE OF NEW MEXICO
Alexander C. Dzurec
NO. 003942
11/29/17
REGISTERED ARCHITECT

autotroph
architecture.planning.sustainable design consulting

No.	Description	Date

Hwy 14 Senior Center

Enlarged Plan - Service Area

Project Number	1606
Date	10.20.17
Drawn By	Author
Checked By	Checker

A4.4

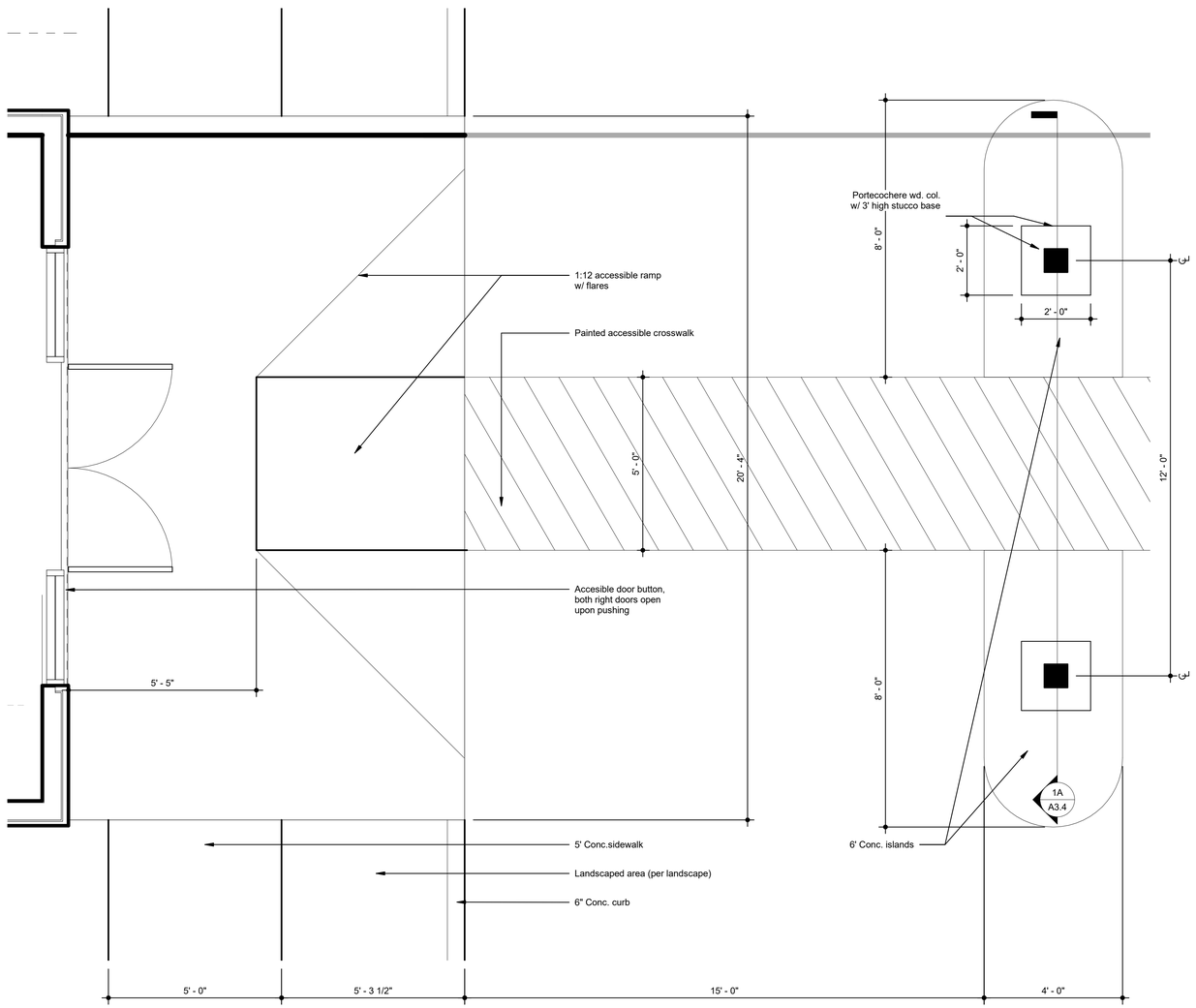

1A Enlarged Plan - Entrance
SCALE: 1/2" = 1'-0"

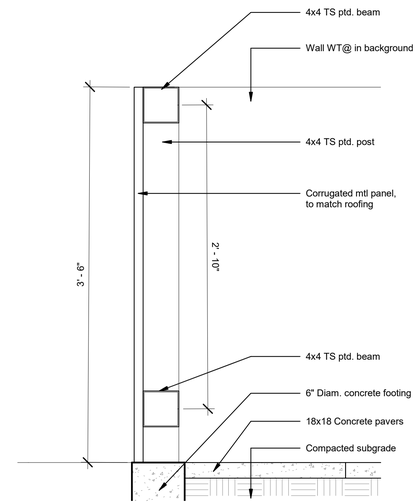

5D Art's Patio Fence Detail
SCALE: 1 1/2" = 1'-0"

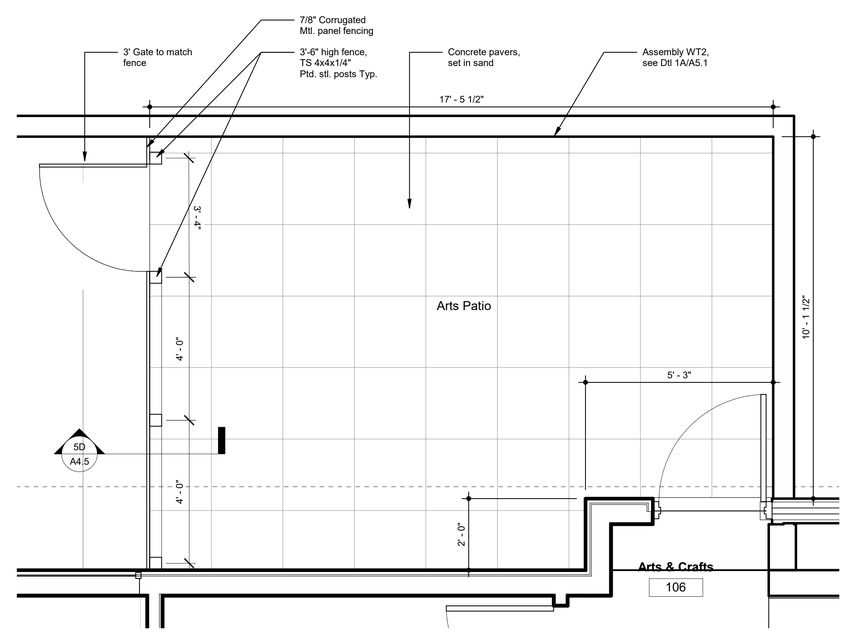

5A Enlarged Plan - Arts Patio
SCALE: 1/2" = 1'-0"

STATE OF NEW MEXICO
Alexander C. Dzurec
NO. 003942
11/29/17
REGISTERED ARCHITECT

autotroph
architecture.planning.sustainable design consulting

No.	Description	Date

Hwy 14 Senior Center

Enlarged Plans - Site Elements

Project Number	1606
Date	10.20.17
Drawn By	Author
Checked By	Checker

A4.5

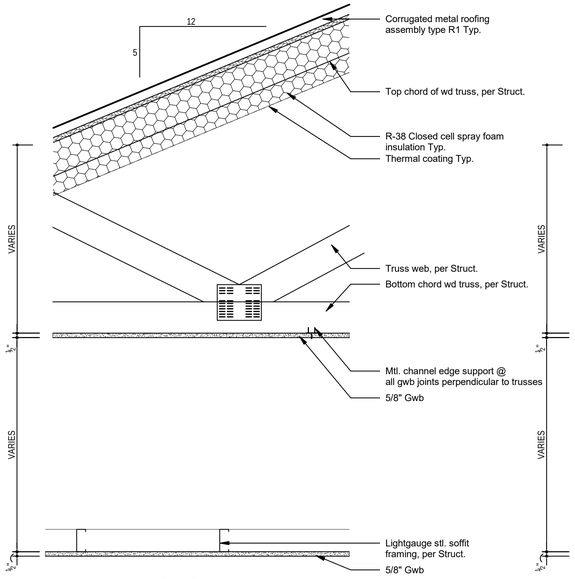

Basis of design
Roof type R1
maximum incline: 5:12
engineered wd. truss, per Struct.
5/8" GWB ceiling

COMMON GYP. BD. CEILING

1D Ceiling Type CT1
SCALE: 1 1/2" = 1'-0"

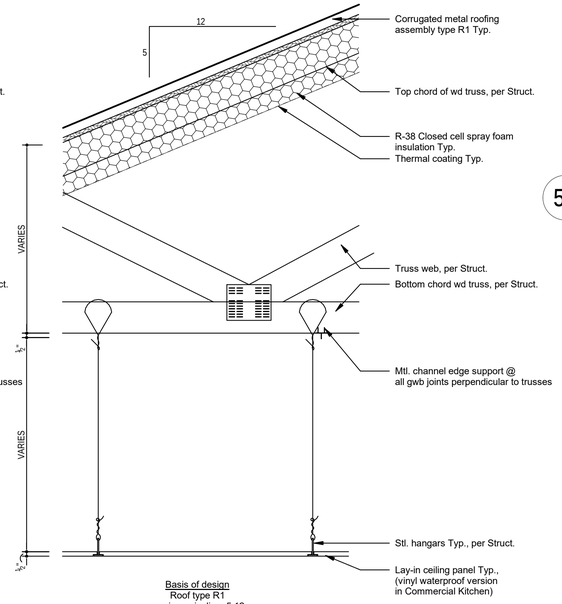

Basis of design
Roof type R1
maximum incline: 5:12
engineered wd. truss, per Struct.
suspended stl. frame lay-in ceiling

COMMON LAY-IN CEILING

3D Ceiling Type CT2
SCALE: 1 1/2" = 1'-0"

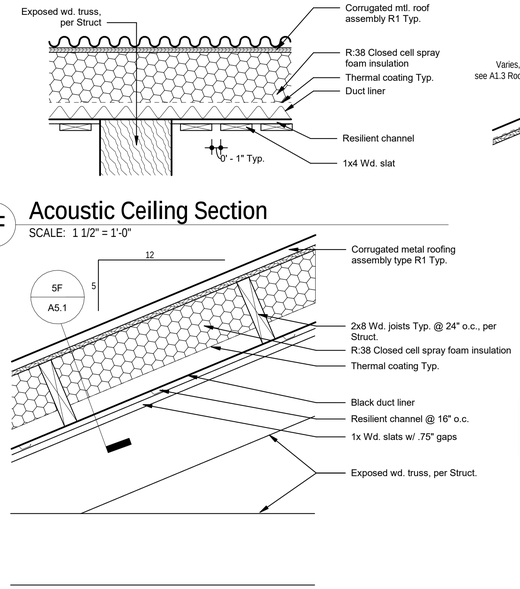

Basis of design
Roof type R1
maximum incline: 5:12
Acoustic ceiling treatement
exposed engineered wd. truss, per Struct.

EXPOSED SLOPED TRUSS CEILING

5D Ceiling Type CT3
SCALE: 1 1/2" = 1'-0"

5F Acoustic Ceiling Section
SCALE: 1 1/2" = 1'-0"

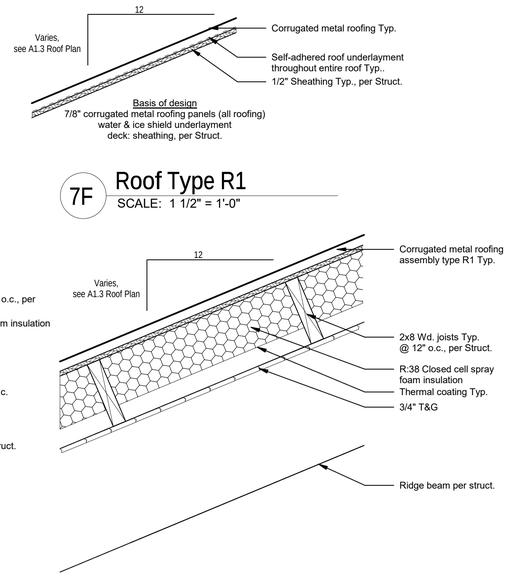

Basis of design
7/8" corrugated metal roofing panels (all roofing)
water & ice shield underlayment
deck: sheathing, per Struct.

7F Roof Type R1
SCALE: 1 1/2" = 1'-0"

Basis of design
Roof type R1
maximum incline: 7.5:12
3/4" T&G sheathing
exposed wd. ridge beams, per Struct.

EXPOSED SLOPED TRUSS CEILING

7D Ceiling Type CT4
SCALE: 1 1/2" = 1'-0"

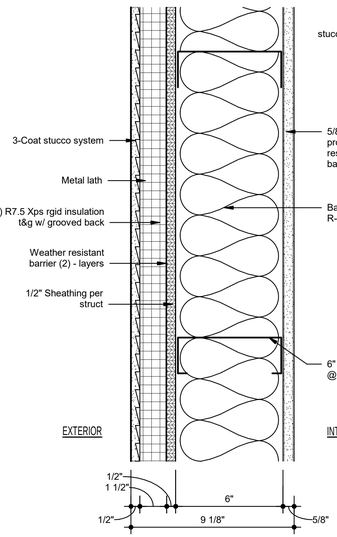

EXTERIOR STUCCO WALL TYPE WT1

Exterior 6" steel stud wall
load bearing
no rating
single sided stucco wall

1A Wall Type WT1
SCALE: 3" = 1'-0"

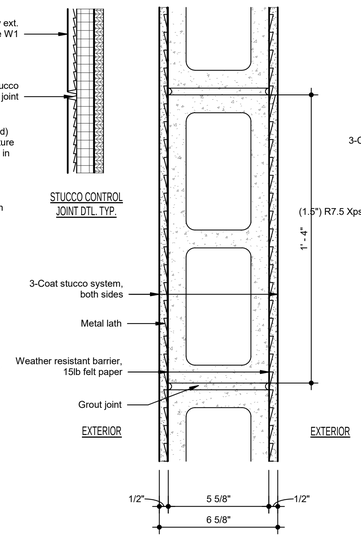

EXTERIOR STUCCO WALL TYPE WT2

Exterior 6" CMU yard wall
non-load bearing
no rating
dual sided stucco yard wall

3A Wall Type WT2
SCALE: 3" = 1'-0"

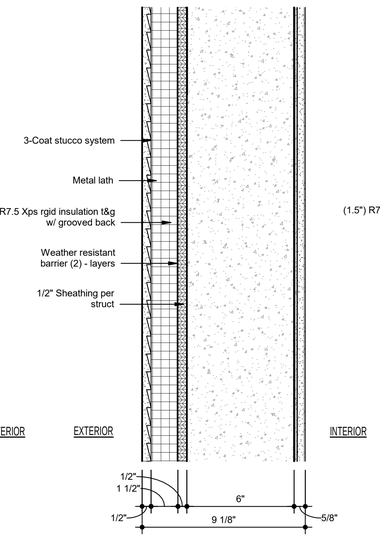

EXTERIOR CONCRETE STUCCO WALL TYPE WT3

Exterior 6" conc. wall
load bearing
no rating
single sided stucco wall

4A Wall Type WT3
SCALE: 3" = 1'-0"

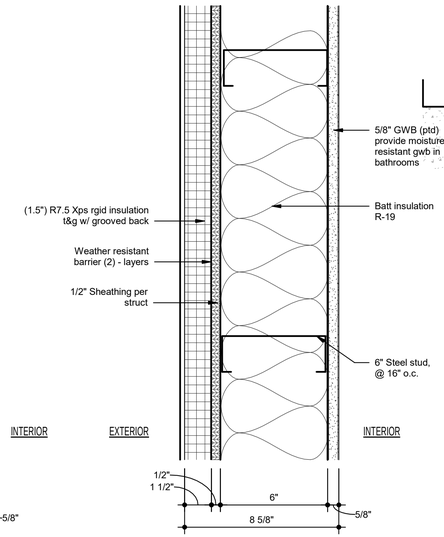

EXTERIOR CONCRETE STUCCO WALL TYPE WT4

Exterior 6" stl. stud wall
load bearing
no rating
single sided sheet mtl. wall

5A Wall Type WT4
SCALE: 3" = 1'-0"

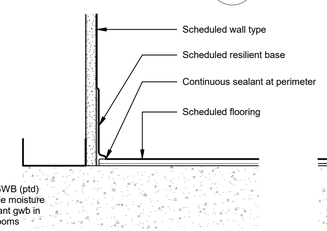

ASSEMBLY - RESILIENT BASE

6C Resilient Base
SCALE: 3" = 1'-0"

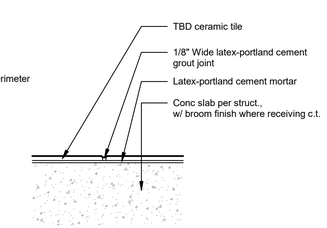

ASSEMBLY - TILE FLOORING

7C Tile Flooring
SCALE: 3" = 1'-0"

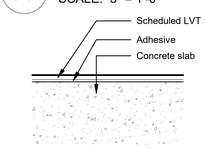

ASSEMBLY - LINEAR VINYL TILE

6B LVT Flooring
SCALE: 3" = 1'-0"

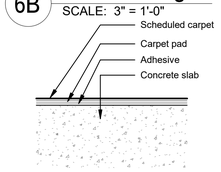

ASSEMBLY - CARPET FLOORING

6A Carpet Flooring
SCALE: 3" = 1'-0"

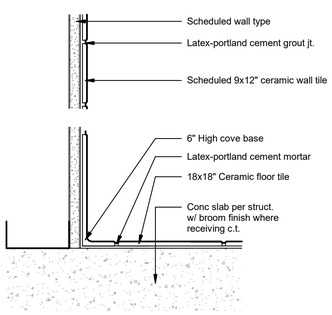

ASSEMBLY - CERAMIC WALL TILE

7A Wall Tile
SCALE: 3" = 1'-0"

STATE OF NEW MEXICO
Alexander C. Dzurec
NO. 003942
11/29/17
REGISTERED ARCHITECT

autotroph
architecture.planning.sustainable design consulting

No.	Description	Date

Hwy 14 Senior Center

Assembly Details

Project Number	1606
Date	10.20.17
Drawn By	LMB
Checked By	AD

A5.1

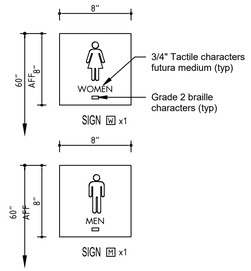

6C RESTROOM SIGNS
1 1/2"=1'-0"

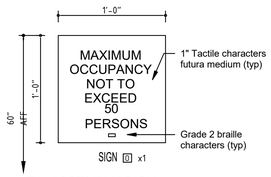

6F ASSEMBLY SIGN
1 1/2"=1'-0"

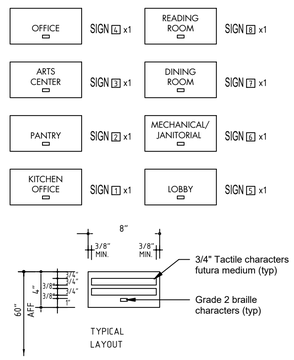

7C ROOM IDENTIFICATION SIGNS
1 1/2"=1'-0"

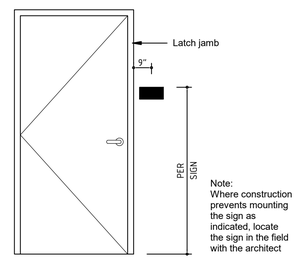

4F SIGN LOCATION DIAGRAM
NTS

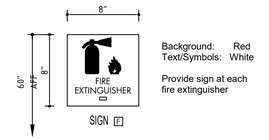

6E FIRE EXTINGUISHER SIGN
1 1/2"=1'-0"

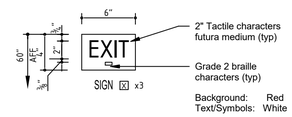

4E EXIT SIGN
1 1/2"=1'-0"

1D Interior Signage
SCALE: 1 1/2" = 1'-0"

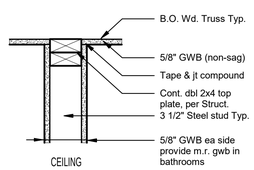

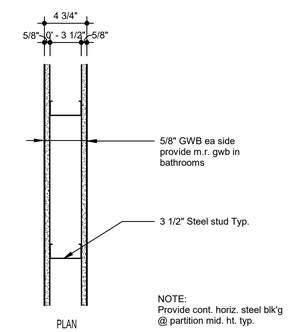

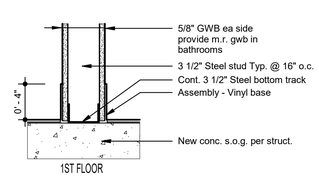

PARTITION TYPE NP1
NEW COMMERCIAL BUILDING
NON-BEARING
NO RATING

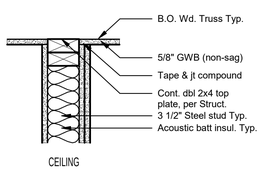

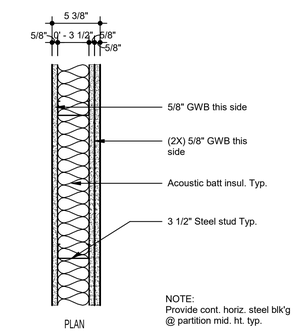

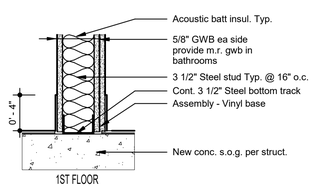

PARTITION TYPE NP2
NEW COMMERCIAL BUILDING
NON-BEARING
ACOUSTICALLY INSULATED-STC 50
NO RATING

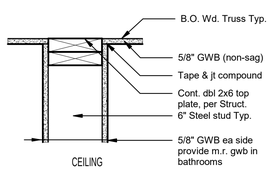

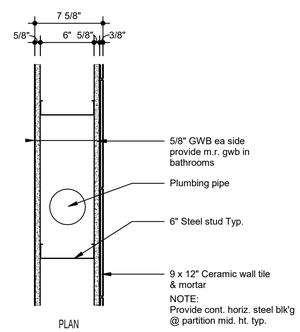

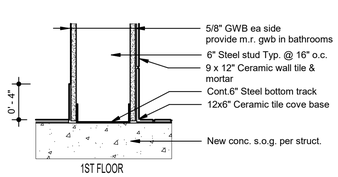

PARTITION TYPE NP3
NEW COMMERCIAL BUILDING
PLUMBING WET WALL
NON-BEARING
NO RATING

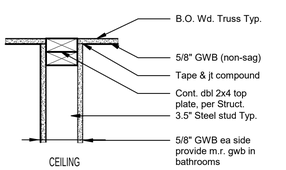

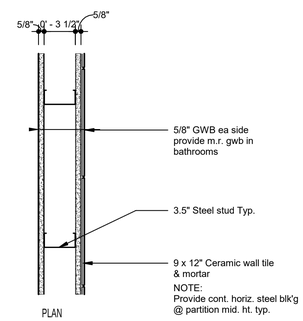

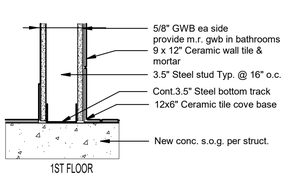

PARTITION TYPE NP4
NEW COMMERCIAL BUILDING
NON PLUMBING TILED WALL
NON-BEARING
NO RATING

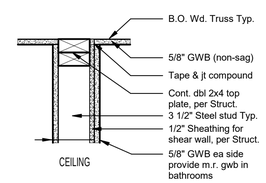

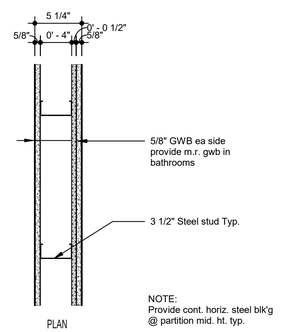

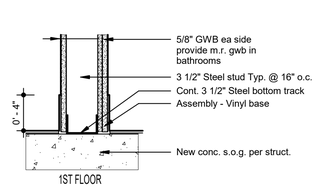

PARTITION TYPE NP5
NEW COMMERCIAL BUILDING
NON-BEARING SHEAR WALL
NO RATING

1A Interior Wall Types
SCALE: 1 1/2" = 1'-0"

SHEET NOTES:

1. Interior Wall Types to extend to bottom of truss Typ.

STATE OF NEW MEXICO
Alexander C. Dzurec
NO. 003942
11/29/17
REGISTERED ARCHITECT

autotroph
architecture.planning.sustainable design consulting

No.	Description	Date

Hwy 14 Senior Center

Interior Details

Project Number	1606
Date	10.20.17
Drawn By	LMB
Checked By	AD

A5.2

Door Schedule

Door #	Location	Type Mark	Panel Width	Panel Height	Thickness	Door Material	Door Finish	Frame Type	Frame Finish	Details Head	Details Jamb	Hardware Set	Comments
101A	Vestibule	D3	6' - 0"	8' - 0"	0' - 1 3/4"	Aluminum	Paint	Alum.	Paint	7C/A5.4	7BA5.4	Set #1	Exterior double door w/ full lights
101B	Lobby	D3	6' - 0"	8' - 0"	0' - 1 3/4"	Aluminum	Paint	Alum.	Paint	7C/A5.4	7BA5.4	Set #2	Exterior double door w/ full lights
101C	Lobby	D3	6' - 0"	8' - 0"	0' - 1 3/4"	Aluminum	Paint	Alum.	Paint	7C/A5.4	7BA5.4	Set #3	Exterior double door w/ full lights
101D	Hall	D1	2' - 0"	8' - 0"	0' - 1 3/4"	Solid Core Wood	Stain	Hollow Metal	Paint	5B/A5.3	5A/A5.3	Set #5	
102	Senior Office	D2	3' - 0"	8' - 0"	0' - 1 3/4"	Solid Core Wood	Stain	Hollow Metal	Paint	6B/A5.3	6A/A5.3	Set #5	Interior door with half light window
103	Mech. 1	D1	3' - 0"	8' - 0"	0' - 1 3/4"	Solid Core Wood	Stain	Hollow Metal	Paint	5B/A5.3	5A/A5.3	Set #5	
103A	Elec.	D7	3' - 0"	8' - 0"	0' - 1 3/4"	Hollow Metal	Paint	Hollow Metal	Paint	5B/A5.3	5A/A5.3	Set #5	
104	Reading Room	D2	3' - 0"	8' - 0"	0' - 1 3/4"	Solid Core Wood	Stain	Hollow Metal	Paint	6B/A5.3	6A/A5.3	Set #5	Interior door with half light window
105	Men's	D1	3' - 0"	8' - 0"	0' - 1 3/4"	Solid Core Wood	Stain	Hollow Metal	Paint	7B/A5.3	7A/A5.3	Set #7	
106	Arts & Crafts	D2	3' - 0"	8' - 0"	0' - 1 3/4"	Solid Core Wood	Stain	Hollow Metal	Paint	5B/A5.3	5A/A5.3	Set #6	Interior door with half light window
106A	Arts Storage	D1	3' - 0"	8' - 0"	0' - 1 3/4"	Solid Core Wood	Stain	Hollow Metal	Paint	5B/A5.3	5A/A5.3	Set #5	
106B	Arts & Crafts	D9	3' - 0"	8' - 0"	0' - 1 3/4"	Aluminum	Paint	Alum. Assembly	Paint	7C/A5.4	7BA5.4	Set #4	Exterior single door w/ full light
107	Women's	D1	3' - 0"	8' - 0"	0' - 1 3/4"	Solid Core Wood	Stain	Hollow Metal	Paint	7B/A5.3	7A/A5.3	Set #7	
108	Senior Dining/Meeting Room	D4	6' - 0"	8' - 0"	0' - 1 3/4"	Solid Core Wood	Stain	Hollow Metal	Paint	7E/A5.3	7D/A5.3	Set #9	Interior double door w/ full lights
108A	Commercial Kitchen	D10	9' - 0"	5' - 0"	0' - 1 1/2"	Metal Roll Up		Metal Roll Up					Interior roll-up door
108B	Senior Dining/Meeting Room	D3	6' - 0"	8' - 0"	0' - 1 3/4"	Aluminum	Paint	Alum.	Paint	7C/A5.4	7BA5.4	Set #3	Exterior double door w/ full lights
108C	Senior Dining/Meeting Room	D3	6' - 0"	8' - 0"	0' - 1 3/4"	Aluminum	Paint	Alum.	Paint	7C/A5.4	7BA5.4	Set #3	Exterior double door w/ full lights
108D	Senior Storage	D5	6' - 0"	8' - 0"	0' - 1 3/4"	Solid Core Wood	Stain	Hollow Metal	Paint	7E/A5.3	7D/A5.3	Set #8	Interior double door
109	Commercial Kitchen	D2	3' - 0"	8' - 0"	0' - 1 3/4"	Solid Core Wood	Stain	Hollow Metal	Paint	7B/A5.3	7A/A5.3	Set #10	Interior door with half light window
109A	Office	D8	3' - 0"	8' - 0"	0' - 1 3/4"	Hollow Metal	Paint	Hollow Metal	Paint	5B/A5.3	5A/A5.3	Set #5	
109B	Pantry	D8	3' - 0"	8' - 0"	0' - 1 3/4"	Hollow Metal	Paint	Hollow Metal	Paint	5B/A5.3	5A/A5.3	Set #10	
109C	Loading Vestibule	D8	3' - 0"	8' - 0"	0' - 1 3/4"	Hollow Metal	Paint	Hollow Metal	Paint			Set #11	
109D	Jan.	D7	3' - 0"	8' - 0"	0' - 1 3/4"	Hollow Metal	Paint	Hollow Metal	Paint	5B/A5.3	5A/A5.3	Set #5	
109E	Loading Vestibule	D6	6' - 0"	8' - 0"	0' - 1 3/4"	Hollow Metal	Paint	Hollow Metal	Paint	6E/A5.3	6D/A5.3	Set #12	Exterior double door
110	Mech. 2	D7	3' - 0"	8' - 0"	0' - 1 3/4"	Hollow Metal	Paint	Hollow Metal	Paint	6E/A5.3	6D/A5.3	Set #13	Exterior single door
112	Loading Dock	D11	12' - 0"	10' - 0"	0' - 1 1/2"	Metal Roll Up		Metal Roll Up					Exterior roll-up door in Loading Dock

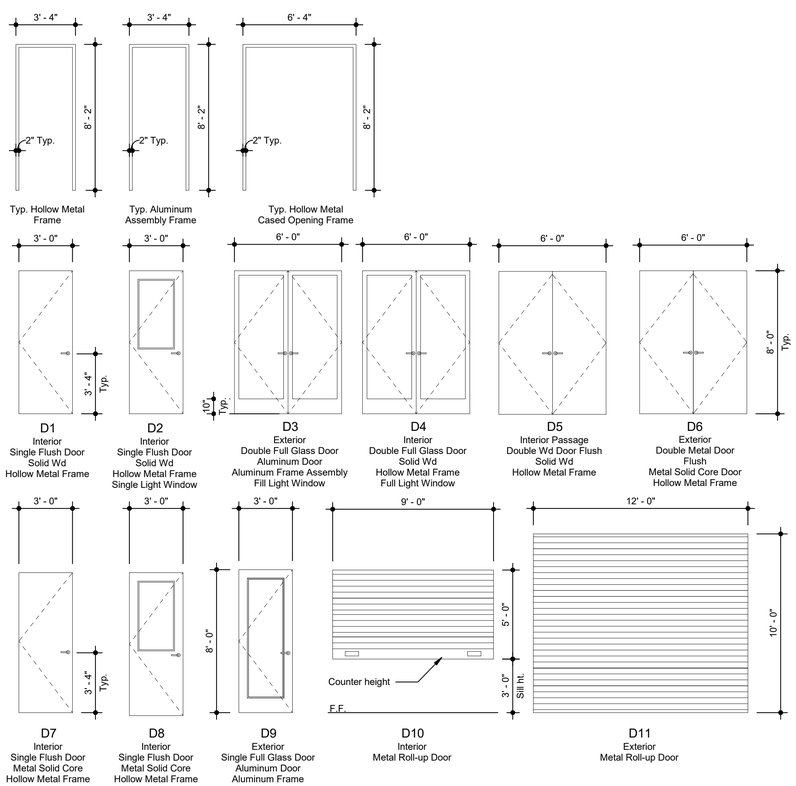

Door & Door Frame Types
SCALE: 1/4" = 1'-0"

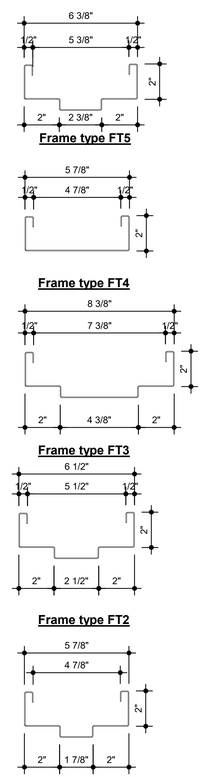

4A Mtl. Door Frame Details
SCALE: 3" = 1'-0"

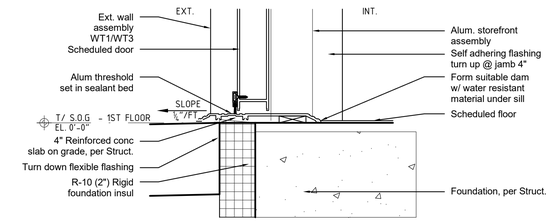

6F Door @ Storefront Sill - WT1
SCALE: 3" = 1'-0"

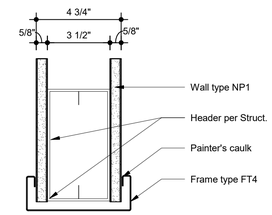

6E Cased Opening Head - NP1
SCALE: 3" = 1'-0"

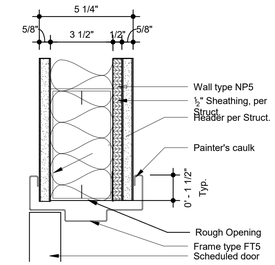

7E Door Head - NP5
SCALE: 3" = 1'-0"

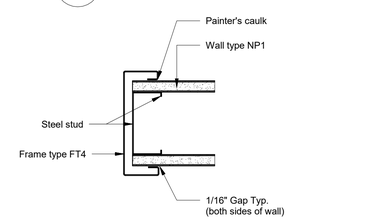

6D Cased Opening Jamb - NP1
SCALE: 3" = 1'-0"

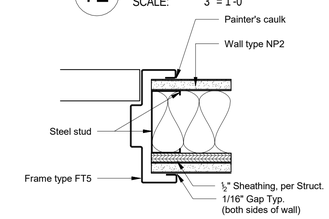

7D DoorJamb - NP5
SCALE: 3" = 1'-0"

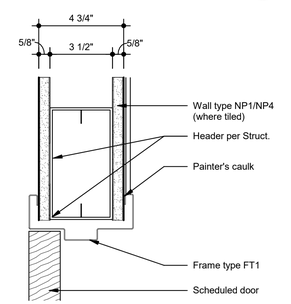

5B Door Head - NP1/NP4
SCALE: 3" = 1'-0"

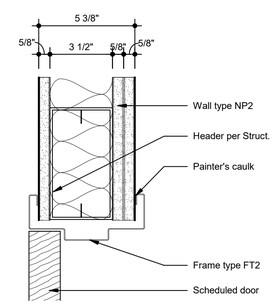

6B Door Head - NP2
SCALE: 3" = 1'-0"

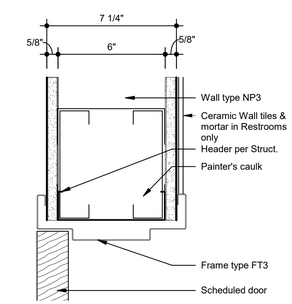

7B Door Head - NP3
SCALE: 3" = 1'-0"

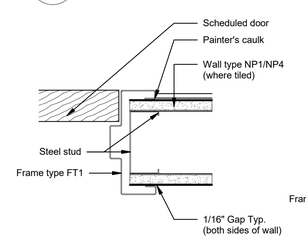

5A Door Jamb - NP1/NP4
SCALE: 3" = 1'-0"

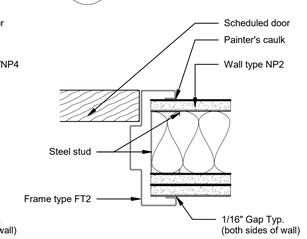

Plan Detail - Door Jamb
Wall Type NP2

6A Door Jamb - NP2
SCALE: 3" = 1'-0"

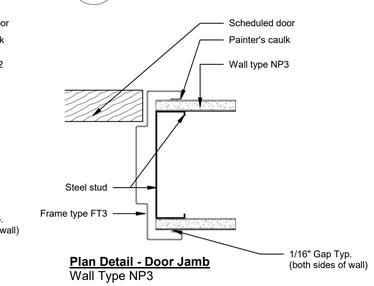

Plan Detail - Door Jamb
Wall Type NP3

7A Door Jamb - NP3
SCALE: 3" = 1'-0"

SHEET NOTES:

1. Door dimensions are for panels only. Rough openings will require additional 2" per side to account for head/jamb. Allow for 2" offset per head & jambs when framing rough openings for doors.
2. All interior hollow mtl. door frames and mtl. doors painted to match adjacent wall color with a semi-gloss version of the same color.
3. All exterior mtl. doors to be painted using fluoropolymer coated paint, Valspar "Slate Blue" 396B1082.

STATE OF NEW MEXICO
Alexander C. Dzurec
NO. 003942
11/29/17
REGISTERED ARCHITECT

autotroph
architecture.planning.sustainable design consulting

No.	Description	Date

Hwy 14 Senior Center

Door Schedule & Details

Project Number	1606
Date	10.20.17
Drawn By	LMB
Checked By	AD

A5.3

Window/Storefront Schedule

Window #	Type	Material	Unit Dimensions Width	Unit Dimensions Height	Rough Opening Rough Width	Rough Opening Rough Height	Description	Details Head	Details Jamb	Details Sill
101A	W1	Metal - Aluminium	12' - 8"	8' - 2"	12' - 10"	8' - 3"	Assembly - Fixed/Double Door	4C/A5.4	4B/A5.4	7A/A5.4
101B	W10	Metal - Aluminium	2' - 0"	2' - 0"	2' - 2"	2' - 2"	Fixed	4C/A5.4	4B/A5.4	4A/A5.4
101C	W1	Metal - Aluminium	12' - 8"	8' - 2"	12' - 10"	8' - 3"	Assembly - Fixed/Double Door	4C/A5.4	4B/A5.4	7A/A5.4
101D	W11	Metal - Aluminium	6' - 0"	3' - 0"	6' - 2"	3' - 2"	Fixed	4C/A5.4	4B/A5.4	4A/A5.4
101E	W3	Metal - Aluminium	6' - 0"	8' - 2"	6' - 2"	8' - 3"	Assembly - Fixed	4C/A5.4	4B/A5.4	7A/A5.4
101F	W1	Metal - Aluminium	12' - 8"	8' - 2"	12' - 10"	8' - 3"	Assembly - Fixed/Double Door	4C/A5.4	4B/A5.4	7A/A5.4
101G	W7	Metal - Aluminium	12' - 8"	2' - 6"	12' - 10"	2' - 8"	Assembly - Fixed Clerestory	4C/A5.4	4B/A5.4	4A/A5.4
102A	W4	Metal - Aluminium	9' - 6"	8' - 2"	9' - 8"	8' - 3"	Assembly - Fixed	4C/A5.4	4B/A5.4	7A/A5.4
104A	W4	Metal - Aluminium	9' - 6"	8' - 2"	9' - 8"	8' - 3"	Assembly - Fixed	4C/A5.4	4B/A5.4	7A/A5.4
105A	W10	Metal - Aluminium	2' - 0"	2' - 0"	2' - 2"	2' - 2"	Fixed w/ Frosted Film on Glass	4C/A5.4	4B/A5.4	4A/A5.4
105B	W10	Metal - Aluminium	2' - 0"	2' - 0"	2' - 2"	2' - 2"	Fixed w/ Frosted Film on Glass	4C/A5.4	4B/A5.4	4A/A5.4
106A	W5	Metal - Aluminium	16' - 0"	10' - 0"	16' - 2"	10' - 2"	Assembly - Fixed/Awning	4C/A5.5	1A/A5.5	1D/A5.5
106B	W6	Metal - Aluminium	19' - 4"	10' - 0"	19' - 6"	10' - 2"	Assembly - Fixed/Awning	4C/A5.5	1A/A5.5	1D/A5.5
107A	W10	Metal - Aluminium	2' - 0"	2' - 0"	2' - 2"	2' - 2"	Fixed w/ Frosted Film on Glass	4C/A5.4	4B/A5.4	4A/A5.4
107B	W10	Metal - Aluminium	2' - 0"	2' - 0"	2' - 2"	2' - 2"	Fixed w/ Frosted Film on Glass	4C/A5.4	4B/A5.4	4A/A5.4
108A	W4	Metal - Aluminium	9' - 6"	8' - 2"	9' - 8"	8' - 3"	Assembly - Fixed	4C/A5.4	4B/A5.4	7A/A5.4
108B	W2	Metal - Aluminium	9' - 6"	8' - 0"	9' - 8"	8' - 3"	Assembly - Fixed/Double Door	4C/A5.4	4B/A5.4	7A/A5.4

Window/Storefront Schedule

Window #	Type	Material	Unit Dimensions Width	Unit Dimensions Height	Rough Opening Rough Width	Rough Opening Rough Height	Description	Details Head	Details Jamb	Details Sill
108C	W2	Metal - Aluminium	9' - 6"	8' - 0"	9' - 8"	8' - 3"	Assembly - Fixed/Double Door	4C/A5.4	4B/A5.4	7A/A5.4
108D	W4	Metal - Aluminium	9' - 6"	8' - 2"	9' - 8"	8' - 3"	Assembly - Fixed	4C/A5.4	4B/A5.4	7A/A5.4
108E	W8	Metal - Aluminium	9' - 6"	2' - 6"	9' - 8"	2' - 8"	Assembly - Fixed Clerestory	4C/A5.4	4B/A5.4	4A/A5.4
108F	W8	Metal - Aluminium	9' - 6"	2' - 6"	9' - 8"	2' - 8"	Assembly - Fixed Clerestory	4C/A5.4	4B/A5.4	4A/A5.4
108G	W8	Metal - Aluminium	9' - 6"	2' - 6"	9' - 8"	2' - 8"	Assembly - Fixed Clerestory	4C/A5.4	4B/A5.4	4A/A5.4
108H	W8	Metal - Aluminium	9' - 6"	2' - 6"	9' - 8"	2' - 8"	Assembly - Fixed Clerestory	4C/A5.4	4B/A5.4	4A/A5.4
108I	W12	Metal - Aluminium	9' - 6"	4' - 0"	9' - 8"	4' - 2"	Fixed	4C/A5.4	4B/A5.4	4A/A5.4
108J	W14	Metal - Aluminium	9' - 6"	6' - 0"	9' - 8"	6' - 2"	Fixed	4C/A5.4	4B/A5.4	4A/A5.4
108K	W13	Metal - Aluminium	3' - 2"	4' - 0"	3' - 4"	4' - 2"	Fixed	4C/A5.4	4B/A5.4	4A/A5.4
108L	W9	Metal - Aluminium	3' - 2"	2' - 6"	3' - 4"	2' - 8"	Fixed - Clerestory	4C/A5.4	4B/A5.4	4A/A5.4
108M	W9	Metal - Aluminium	3' - 2"	2' - 6"	3' - 4"	2' - 8"	Fixed - Clerestory	4C/A5.4	4B/A5.4	4A/A5.4
108N	W9	Metal - Aluminium	3' - 2"	2' - 6"	3' - 4"	2' - 8"	Fixed - Clerestory	4C/A5.4	4B/A5.4	4A/A5.4
108O	W9	Metal - Aluminium	3' - 2"	2' - 6"	3' - 4"	2' - 8"	Fixed - Clerestory	4C/A5.4	4B/A5.4	4A/A5.4
108P	W9	Metal - Aluminium	3' - 2"	2' - 6"	3' - 4"	2' - 8"	Fixed - Clerestory	4C/A5.4	4B/A5.4	4A/A5.4
108Q	W9	Metal - Aluminium	3' - 2"	2' - 6"	3' - 4"	2' - 8"	Fixed - Clerestory	4C/A5.4	4B/A5.4	4A/A5.4
108R	W9	Metal - Aluminium	3' - 2"	2' - 6"	3' - 4"	2' - 8"	Fixed - Clerestory	4C/A5.4	4B/A5.4	4A/A5.4
108S	W9	Metal - Aluminium	3' - 2"	2' - 6"	3' - 4"	2' - 8"	Fixed - Clerestory	4C/A5.4	4B/A5.4	4A/A5.4
108T	W9	Metal - Aluminium	3' - 2"	2' - 6"	3' - 4"	2' - 8"	Fixed - Clerestory	4C/A5.4	4B/A5.4	4A/A5.4
109A	W9	Metal - Aluminium	3' - 2"	2' - 6"	3' - 4"	2' - 8"	Fixed - Clerestory	4C/A5.4	4B/A5.4	4A/A5.4

SHEET NOTES:

1. Allow for 1" offset per side from r.o. dimensions when constructing windows.
2. All operable windows shown as Add Alternate #3 to be fixed if alternate is not pursued.
3. Any glass in storefronts touching floor must be tempered.
4. All storefront assemblies/windows and associated doors to be painted using fluoropolymer coated paint, Valspar "Slate Blue" 396B1082.

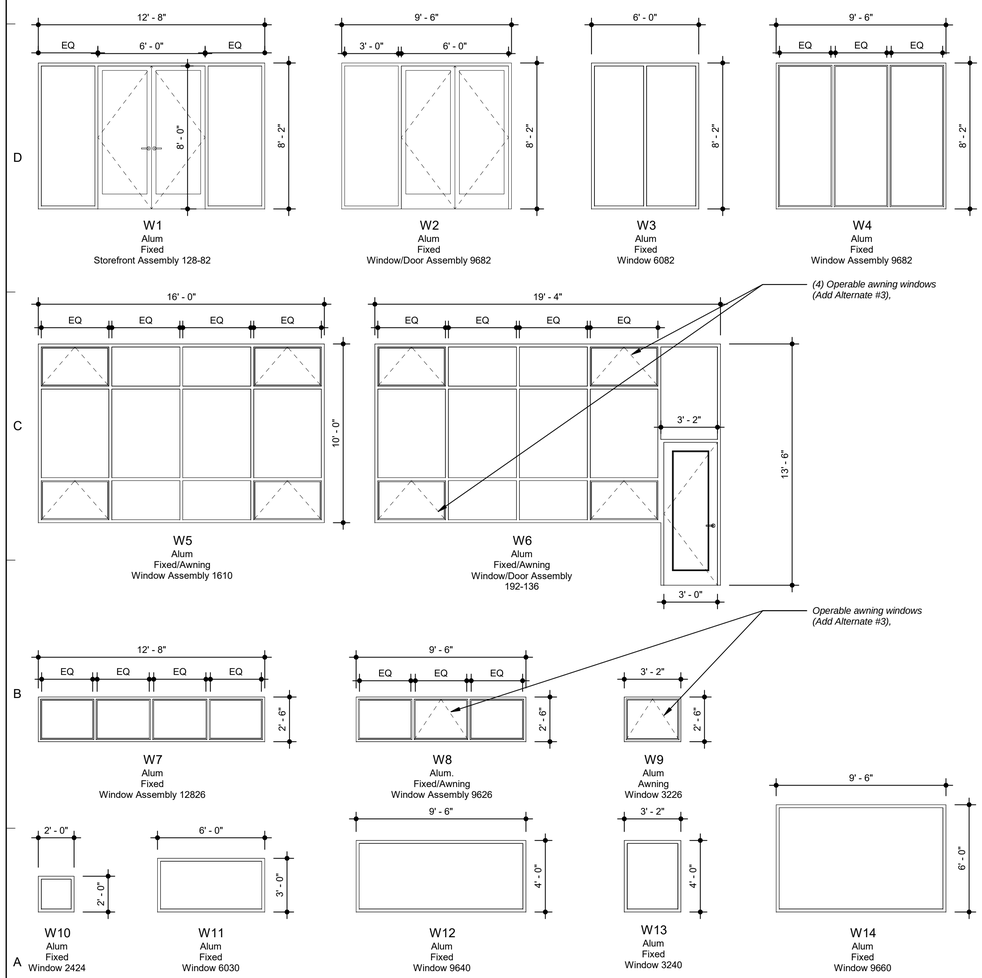

4C Section Detail - Window/Storefront Head - WT1 Alum
SCALE: 3" = 1'-0"

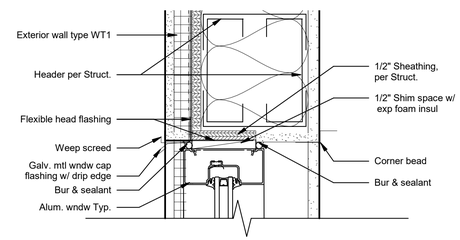

7C Section Detail - Door Head @ Storefront
SCALE: 3" = 1'-0"

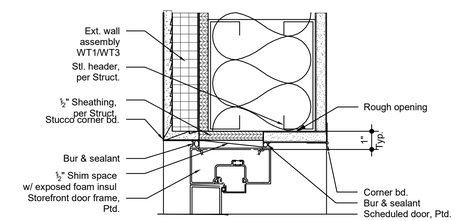

4B Section Detail - Window/Storefront Jamb - WT1
SCALE: 3" = 1'-0"

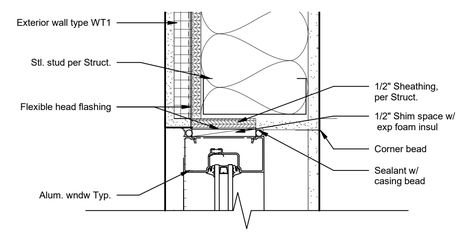

7B Section Detail - Door Jamb @ Storefront
SCALE: 3" = 1'-0"

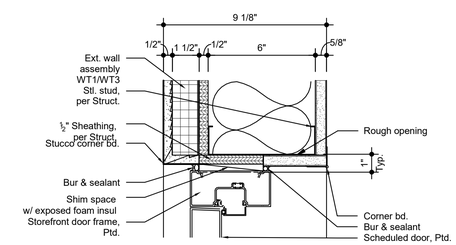

4A Section Detail - Alum Window/Storefront Sill - WT1
SCALE: 3" = 1'-0"

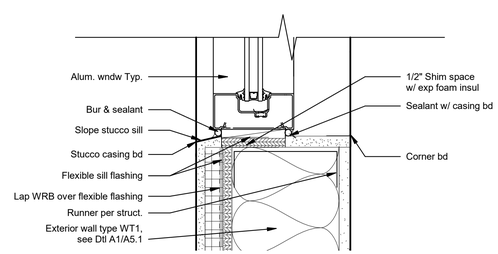

7A Section Detail - Alum Storefront Sill @ Slab
SCALE: 3" = 1'-0"

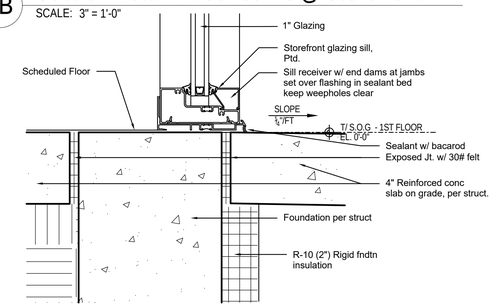

Window Types
SCALE: 1/4" = 1'-0"

STATE OF NEW MEXICO
Alexander C. Dzurec
NO. 003942
11/29/17
REGISTERED ARCHITECT

autotroph
architecture.planning.sustainable design consulting

No.	Description	Date

Hwy 14 Senior Center

Window Schedule & Details

Project Number	1606
Date	10.20.17
Drawn By	LMB
Checked By	AD

A5.4

SHEET NOTES:

1. Allow for 1" offset per side from r.o. dimensions when constructing windows.
2. All operable windows shown as Add Alternate #3 to be fixed if alternate is not pursued.
3. Any glass in storefronts touching floor must be tempered.
4. All storefront assemblies/windows and associated doors to be painted using fluoropolymer coated paint, Valspar "Slate Blue" 396B1082.

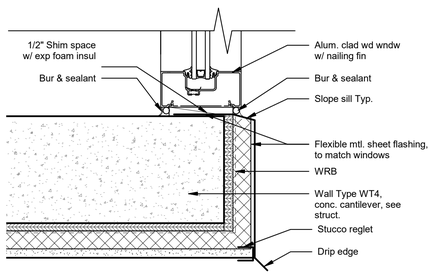

1D Section Detail - Alum Window/Storefront Sill - WT3
SCALE: 3" = 1'-0"

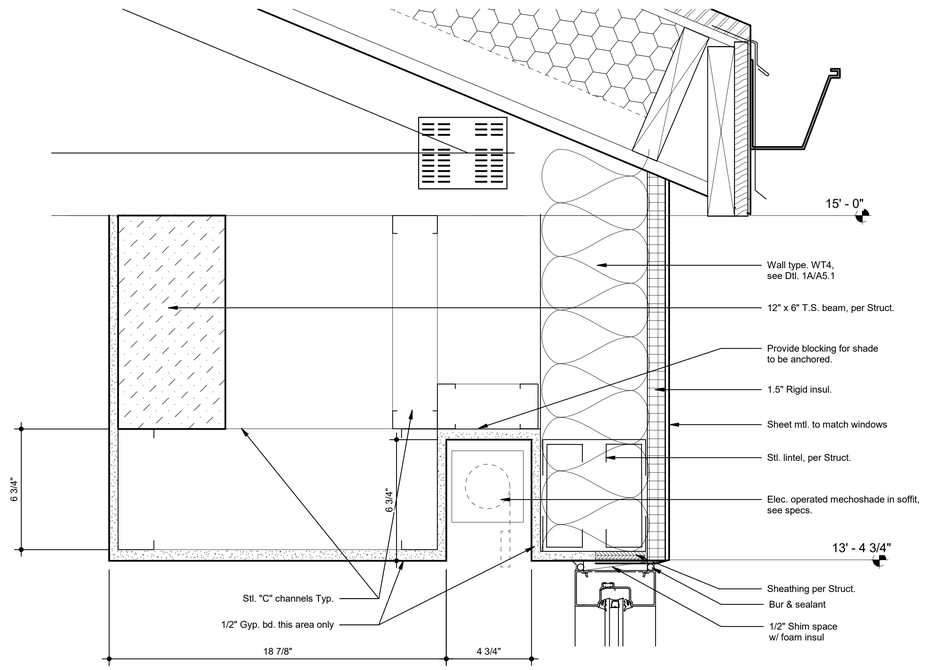

4C Section Detail - Alum Window Header WT3
SCALE: 3" = 1'-0"

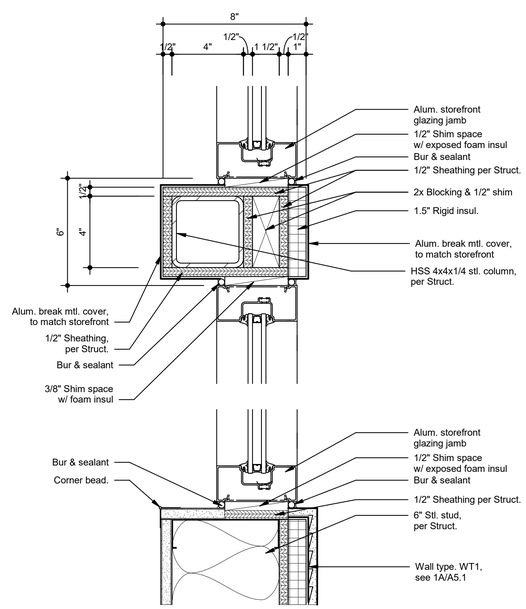

1A Plan Details - Storefront Jambs
SCALE: 3" = 1'-0"

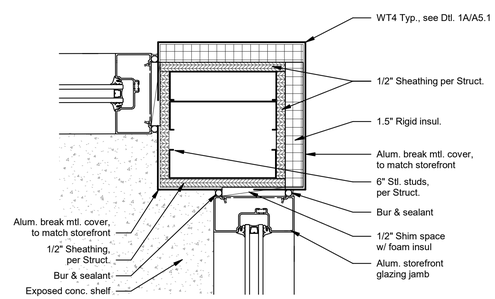

4A Plan Detail - Storefront Window Rm. 108 - Corner
SCALE: 3" = 1'-0"

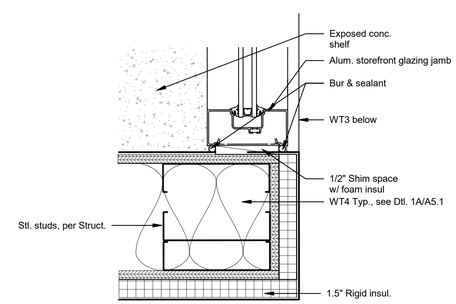

6A Plan Detail - Storefront Window Rm. 108
SCALE: 3" = 1'-0"

STATE OF NEW MEXICO
Alexander C. Dzurec
NO. 003942
11/29/17
REGISTERED ARCHITECT

autotroph
architecture.planning.sustainable design consulting

No.	Description	Date

Hwy 14 Senior Center

Storefront Details

Project Number	1606
Date	10.20.17
Drawn By	Author
Checked By	Checker

A5.5

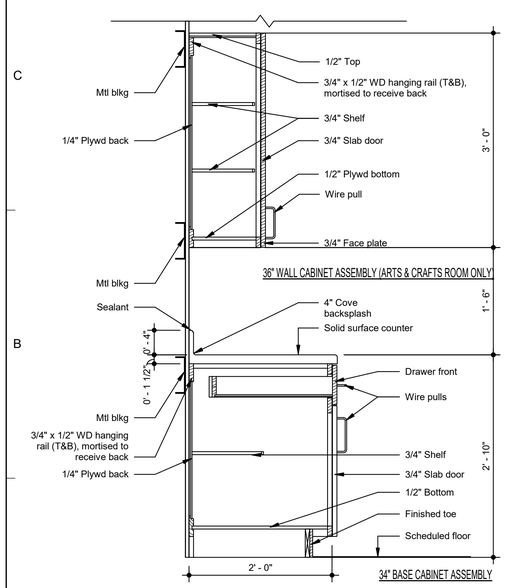

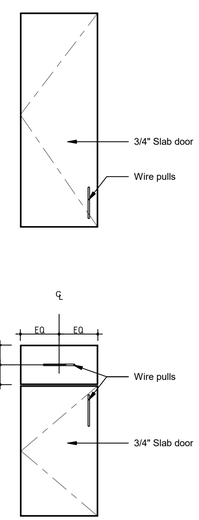

1A Casework Details - Typ. Cabinetry
SCALE: 1" = 1'-0"

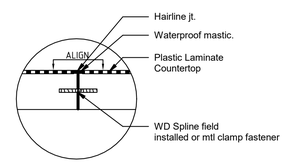

4C Casework Seam Detail - Countertop Seam Detail
SCALE: NTS

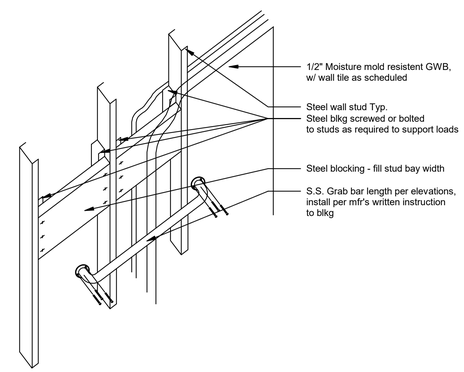

6C Casework Details -Axon - Grab Bar Mounting Blocking
SCALE: NTS

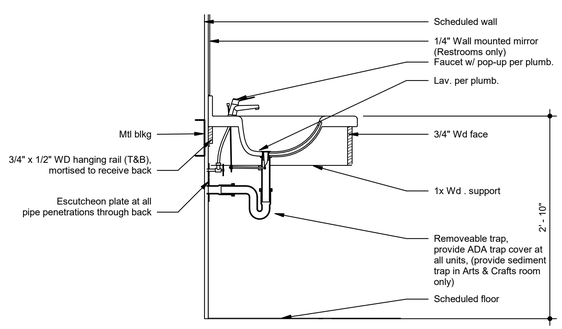

4A Section Detail - Restroom Counter
SCALE: 1" = 1'-0"

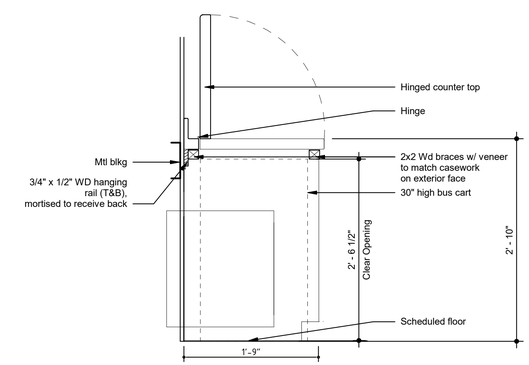

6A Section Detail - Hinged Counter Top
SCALE: 1" = 1'-0"

STATE OF NEW MEXICO
Alexander C. Dzurec
NO. 003942
11/29/17
REGISTERED ARCHITECT

autotroph
architecture.planning.sustainable design consulting

No.	Description	Date

Hwy 14 Senior Center

Casework Details

Project Number	1606
Date	10.20.17
Drawn By	LMB
Checked By	AD

A5.6

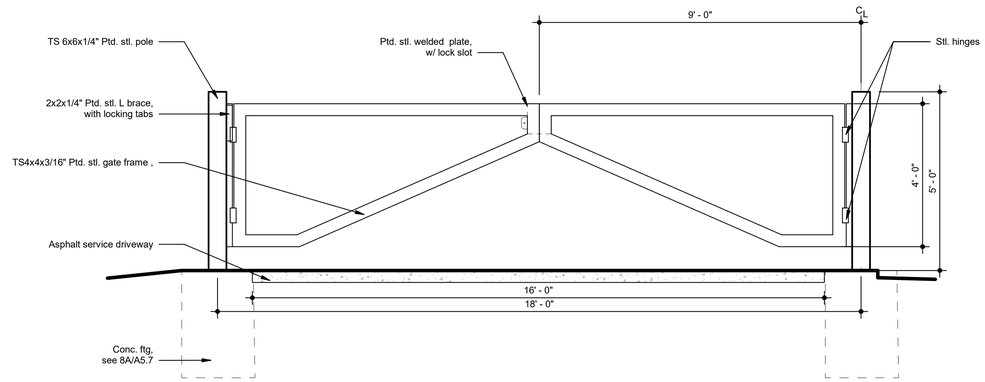

1E East Elevation - Service Gate
SCALE: 1/2" = 1'-0"

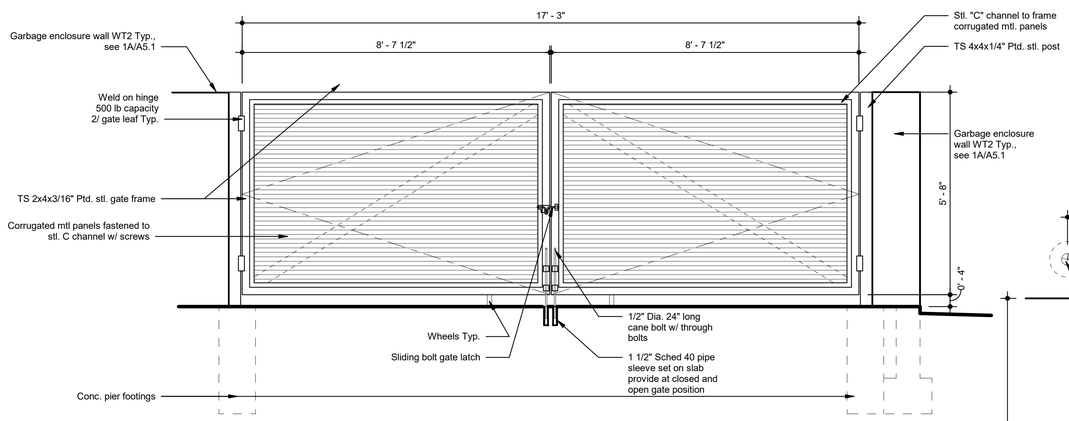

1C North Elevation - Trash Enclosure
SCALE: 1/2" = 1'-0"

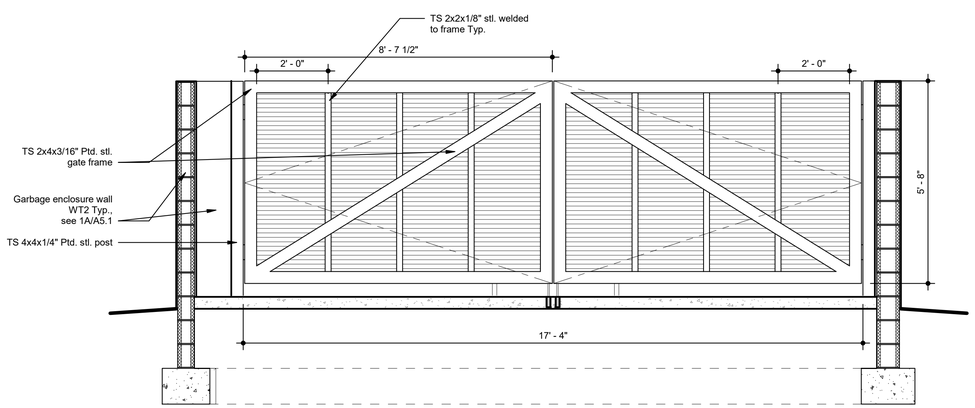

1A South Elevation - Trash Enclosure
SCALE: 1/2" = 1'-0"

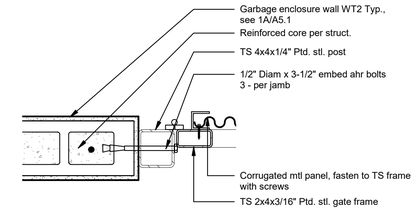

5E Plan Detail - Trash Enclosure
SCALE: 1 1/2" = 1'-0"

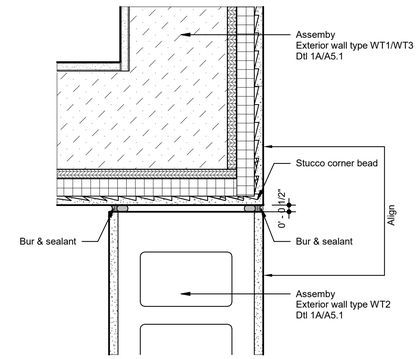

5D Stucco Expansion Jt. Detail
SCALE: 3" = 1'-0"

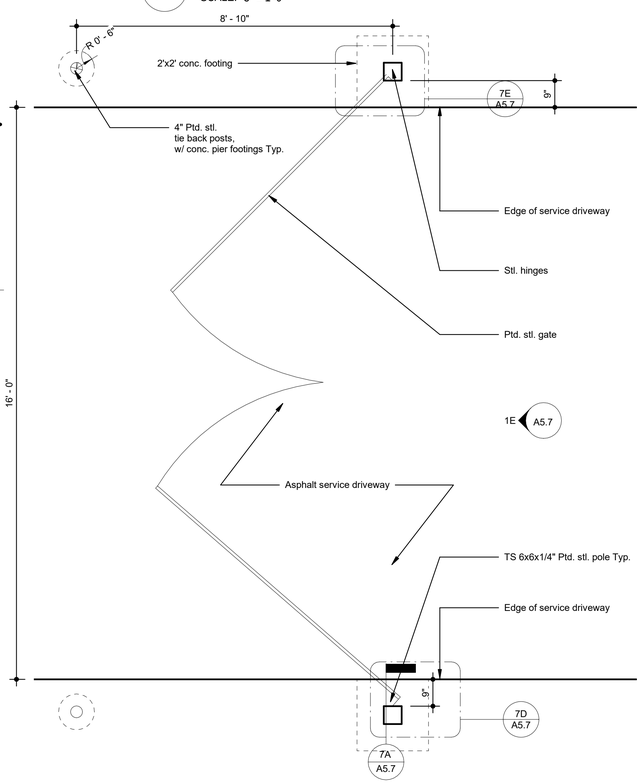

5A Enlarged Plan - Service Gate
SCALE: 1/2" = 1'-0"

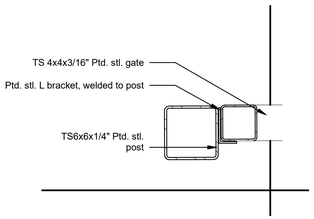

7E Plan Detail - Service Gate 1
SCALE: 1 1/2" = 1'-0"

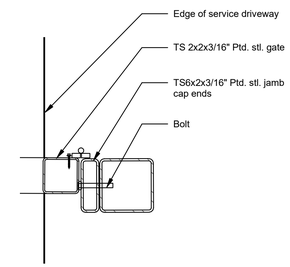

7D Plan Detail - Service Gate 2
SCALE: 1 1/2" = 1'-0"

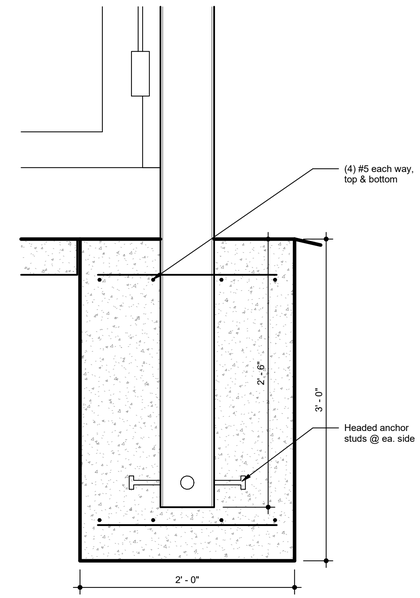

7A Site Post Foundation Detail
SCALE: 1 1/2" = 1'-0"

STATE OF NEW MEXICO
Alexander C. Dzurec
NO. 003942
11/29/17
REGISTERED ARCHITECT

autotroph
architecture.planning.sustainable design consulting

No.	Description	Date

Hwy 14 Senior Center

Site Details

Project Number	1606
Date	10.20.17
Drawn By	Author
Checked By	Checker

A5.7

Room Schedule

Name	Number	Finishes: Base Finish	Finishes: Floor Finish	Finishes: Wall Finish	Finishes: Ceiling Finish	Comments
Lobby	101	Resilient - 1	Linear Vinyl Tile - 1	Paint - 1, Paint - 2 (North Wall only)	Exposed T&G (Stain 1) w/ Glue Lam Beams (Stain 2)	Paint -2 on North wall only
Vestibule	101A	Resilient - 1	Linear Vinyl Tile - 1	Paint - 1	Gyp. Bd	
Hall	101B	Resilient - 1	Linear Vinyl Tile - 1	Paint - 1	Gyp. Bd - suspended	
Senior Office	102	Resilient - 1	Carpet - 1	Paint - 1	Clng Tile - ACT 1	
Mech. 1	103	Resilient - 1	Concrete - Broom Finish	Paint - 3	Gyp. Bd	
Elec.	103A	Resilient - 1	Concrete - Broom Finish	Paint - 3	Gyp. Bd	
Reading Room	104	Resilient - 1	Carpet - 1	Paint - 1	Clng Tile - ACT 1	
Men's	105	Ceramic - Cove Base	CT1	CT2	Gyp. Bd	
Arts & Crafts	106	Resilient - 1	Linear Vinyl Tile - 1	Paint - 1	Gyp. Bd	
Arts Storage	106A	Resilient - 1	Linear Vinyl Tile - 1	Paint - 1	Clng Tile - ACT 2	
Women's	107	Ceramic - Cove Base	CT1	CT2	Gyp. Bd	
Senior Dining/Meeting Room	108	Resilient - 1	Linear Vinyl Tile - 1	Paint - 1, Paint - 2 (East Wall only)	Exposed Truss (Stain 2) w/ acoustic. paneling (Stain 1)	Paint - 2 on East wall only
Senior Storage	108A	Resilient - 1	Linear Vinyl Tile - 1	Paint - 1	Clng Tile - ACT 2	
Commercial Kitchen	109	Quarry - Cove Base	CT3	FRP Wall Panel	Clng Tile - 3	Mold/Mildew Resistant Clng. Tile
Office	109A	Quarry - Cove Base	CT3	Paint - 3	Clng Tile - ACT 2	
Pantry	109B	Quarry - Cove Base	CT3	Paint - 3	Clng Tile - 3	Mold/Mildew Resistant Clng. Tile
Loading Vestibule	109C	Resilient - 1	Concrete - Broom Finish	Paint - 3	Clng Tile - ACT 2	
Jan.	109D	Resilient - 1	Concrete - Broom Finish	Paint - 3	Clng Tile - ACT 2	
Mech. 2	110	Resilient - 1	Concrete - Broom Finish	Paint - 3	Clng Tile - ACT 2	

Interior Finish Legend

Finish Callout	Product Name	Manufacturer	Size	Color
Linear Vinyl Tile - 1	Uncommon Ground 6	Shaw Contract Flooring	6 x 36"	"Colonial" 0188V
Resilient - 1	Traditional Wall Base	Johnsonite	4"	Brown
Carpet - 1	Terasu	Shaw Contract Flooring	24 x 24" Tile	"Sand" 36103
CT1	Heathland	Daltile	18 x 18"	"Sage" HL06
CT2	Heathland	Daltile	9 x 12"	"Raffia" HL02
Ceramic - Cove Base	Heathland	Daltile	6 x 12"	"Raffia" HL02
CT3	Unglazed Quarry Tile	Daltile	8 x 8"	Adobe Brown
Quarry - Cove Base	Unglazed Quarry Tile - Cove Base	Daltile	5 x 8"	Adobe Brown
Paint - 1	Interior Paint	Sherwin Williams		"Kilim Beige" FN107 Egg shell finish
Paint - 2	Interior Paint	Sherwin Williams		"Languid Blue" FN227 Egg shell finish
Paint - 3	Interior Paint	Sherwin Williams		"Dover White" E22 Egg shell finish
Stain - 1	Wood Classics Interior Wood Stain	Sherwin Williams		"Golden Oak" SW 3117-B
Stain - 2	Wood Classics Interior Wood Stain	Sherwin Williams		"Fruitwood" SW 3118-K

Exterior Finish Legend

Finish Callout	Product Name	Manufacturer	Size	Color
Stain - 3	Exterior Wood Stain (Custom match to Stain - 1 in Exterior Grade)	Sherwin Williams		Custom Color matched to "Golden Oak"
Stain - 4	Exterior Wood Stain (Custom match to Stain - 1 in Exterior Grade)	Sherwin Williams		Custom Color matched to "Fruitwood"
Stucco - 1	Exterior Stucco	El Rey Stucco		817 "Dry River"
Stucco - 2 (Accent Stucco)	Exterior Stucco	El Rey Stucco		825 "Rio Bravo"

STATE OF NEW MEXICO
Alexander C. Dzurec
NO. 003942
11/29/17
REGISTERED ARCHITECT

autotroph
architecture.planning.sustainable design consulting

No.	Description	Date

Hwy 14 Senior Center

Room Finish Schedule

Project Number	1606
Date	10.20.17
Drawn By	Author
Checked By	Checker

A6.1

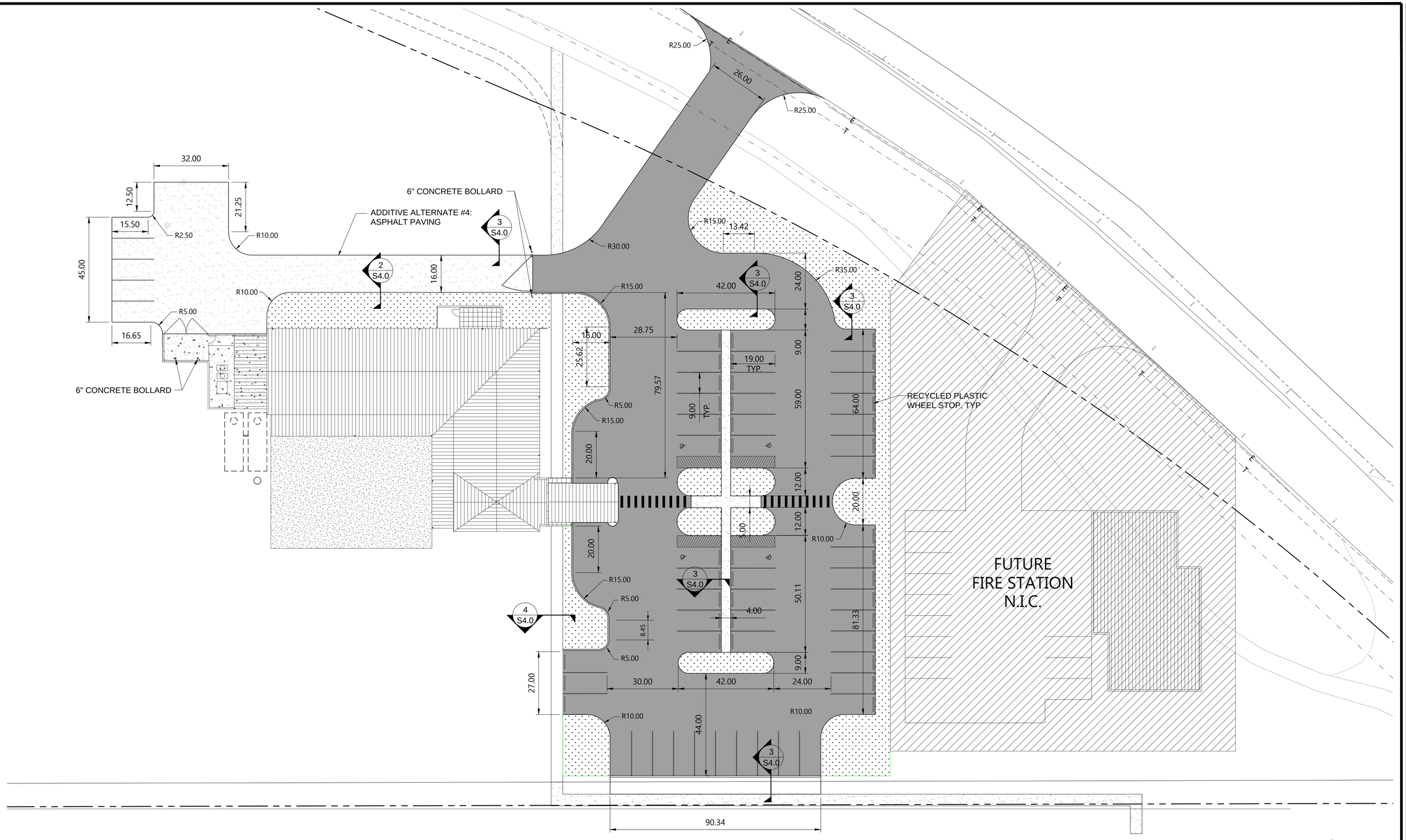

SITE PLAN

SCALE: 1" = 20'

Legend

- PROPERTY BOUNDARY
- NEW ASPHALT PAVING
- CRUSHER FINES
- PLANTINGS, SEE LANDSCAPE
- GRAVEL DRIVE
- FUTURE FIRE DEPARTMENT SITE

MARTIN J. GARCIA
NEW MEXICO
(11767)
REGISTERED PROFESSIONAL ENGINEER
11/30/17

Anchor Engineering, LLC
1035 S. Bosque Lp. Bosque Farms, NM 87068
505.382.1530

REVISIONS		
NO.	DATE	COMMENTS

PROJECT NO.	16-028
DATE:	11.30.17
DRAWN BY:	F PHILLIPS
CHECKED BY:	M GARCIA
SCALE:	1" = 20'

PROJECT TITLE: HWY 14 SENIOR CENTER
LOS CERRILLOS, NEW MEXICO

SHEET TITLE: SITE PLAN

SHEET

C1.0

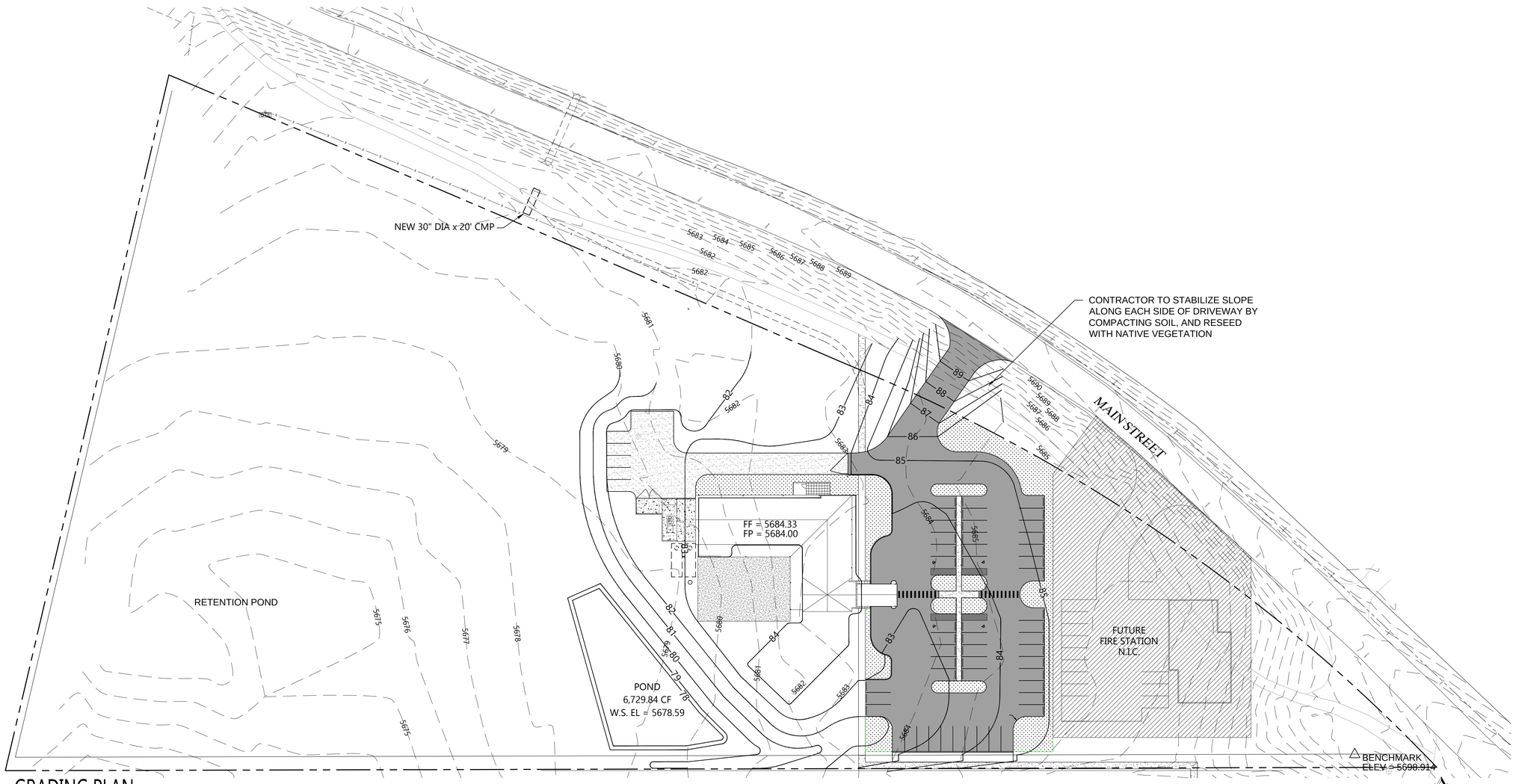

GRADING PLAN

SCALE: 1" = 40'

DRAINAGE CALCULATIONS

(SCS Chapter 2 Method)

No water harvesting

Cerrillos Senior Center

PRE-DEVELOPMENT			POST-DEVELOPMENT		
Site Area:	7.2841	Ac	Site Area:	7.2841	Ac
Total Area	317295	Sq. Ft.	Total Area	317295	Sq. Ft.
Undisturbed Area:	317295	Sq. Ft.	Undisturbed Area:	271925	Sq. Ft.
% of total Area:	100%		% of total Area:	86%	
CN of Undisturbed Area	**80**		CN of Undisturbed Area	**80**	
Weighted CN:		**80**	Weighted CN:		**69**
Roof/Pave/Walks Area	0	Sq. Ft.	Roof/Pave/Walks Area	41220	Sq. Ft.
% of total Area:	0%		% of total Area:	13%	
CN of Roof/Pave/Walks	**98**		CN of Roof/Pave/Walks	**98**	
Weighted CN:		**0**	Weighted CN:		**13**
Gravel Area	0	Sq. Ft.	Gravel Area	0	Sq. Ft.
% of total Area:	0%		% of total Area:	0%	
CN Gravel	**87**		CN Gravel	**87**	
Weighted CN:		**0**	Weighted CN:		**0**
Landscape	0	Sq. Ft.	Landscape	4150	Sq. Ft.
% of total Area:	0%		% of total Area:	1%	
CN Landscape Area	**69**		CN Landscape Area	**69**	
Weighted CN:		**0**	Weighted CN:		**1**
Total Weighted CN:		**80**	Total Weighted CN:		**82**
Time of Concentration:	< 6 Min		Time of Concentration:	< 6 Min	
Unit discharge:	2.3	CFS/Ac-In	Unit discharge:	2.3	CFS/Ac-In
100 Yr 24 Hr Rainfall:	3.25	In	100 Yr 24 Hr Rainfall:	3.25	In
Direct runoff:	1.44	In	Direct runoff:	1.59	In
Peak Discharge:	24.13	CFS	Peak Discharge:	26.68	CFS
Runoff volume:	38088	CF	Runoff volume:	42100	CF
			Pond Volume Required	**4012**	**CF**

DRAINAGE CALCULATIONS

(SCS Chapter 2 Method)

Water Harvesting - Cistern requirements

Cerrillos Senior Center - ROOF DRAINAGE

PRE-DEVELOPMENT			POST-DEVELOPMENT		
Site Area:	0.1899	Ac	Site Area:	0.1899	Ac
Total Area	8270	Sq. Ft.	Total Area	8270	Sq. Ft.
Undisturbed Area:	8270	Sq. Ft.	Undisturbed Area:	0	Sq. Ft.
% of total Area:	100%		% of total Area:	0%	
CN of Undisturbed Area	**80**		CN of Undisturbed Area	**80**	
Weighted CN:		**80**	Weighted CN:		**0**
Roof/Pave/Walks Area	0	Sq. Ft.	Roof/Pave/Walks Area	8270	Sq. Ft.
% of total Area:	0%		% of total Area:	100%	
CN of Roof/Pave/Walks	**98**		CN of Roof/Pave/Walks	**98**	
Weighted CN:		**0**	Weighted CN:		**98**
Gravel Area	0	Sq. Ft.	Gravel Area	0	Sq. Ft.
% of total Area:	0%		% of total Area:	0%	
CN Gravel	**87**		CN Gravel	**87**	
Weighted CN:		**0**	Weighted CN:		**0**
Landscape	0	Sq. Ft.	Landscape	0	Sq. Ft.
% of total Area:	0%		% of total Area:	0%	
CN Landscape Area	**69**		CN Landscape Area	**69**	
Weighted CN:		**0**	Weighted CN:		**0**
Total Weighted CN:		**80**	Total Weighted CN:		**98**
Time of Concentration:	< 6 Min		Time of Concentration:	< 6 Min	
Unit discharge:	2.3	CFS/Ac-In	Unit discharge:	2.3	CFS/Ac-In
100 Yr 24 Hr Rainfall:	3.25	In	100 Yr 24 Hr Rainfall:	3.25	In
Direct runoff:	1.44	In	Direct runoff:	3.02	In
Peak Discharge:	0.63	CFS	Peak Discharge:	1.32	CFS
Runoff volume:	993	CF	Runoff volume:	2079	CF

Drainage Narrative

THE PURPOSE OF THIS GRADING AND DRAINAGE PLAN IS TO PREPARE A SITE TO ACCOMMODATE A NEW SENIOR CENTER IN LOS CERRILLOS, NEW MEXICO. CURRENTLY THE SITE IS UNDEVELOPED AND HAS OFF-SITE RUN-OFF FROM THE NORTH. THE GRADING OF THIS SITE WILL CONTINUE TO KEEP THE HISTORIC FLOW FROM THE OFF-SITE RUN-OFF TO CONTINUE AS IT HAS HISCTORICALLY BEEN DOING. THE RUN-OFF FROM THE NEW CONSTRUCTION WILL FLOW TO A PROPOSED RETENTION POND THAT WILL HOLD THE DEVELOPED FLOWS.

Pond Volume Calculations

78 CONTOUR ——— 6,168.18 SF
79 CONTOUR ——— 7,291.51 SF

$$\frac{6{,}168.18 + 7291.51}{2} \times 1 = 6{,}729.84 \text{ CF}$$

REQUIRED VOLUME ——— 4,012.00 CF
VOLUME PROVIDED ——— 6,729.84 CF

WATER SURFACE ELEV ——— 5678.59

General Notes

- PROPERTY BOUNDARY
- 5680 — EXISTING CONTOUR
- 85 — NEW CONTOUR
- FF — FINISH FLOOR
- FUTURE FIRE STATION PROJECT NOT PART OF THIS CONTRACT
- NEW ASPHALT PAVING
- CRUSHER FINES
- GRAVEL
- PLANTINGS, SEE LANDSCAPE

Project Benchmark △

THE PROJECT BENCHMARK IS A SET HUB NEAR THE SOUTHEAST CORNER OF THE PROPOSED SITE ALONG MAIN STREET.

N:1617999.676
E:1683397.671
ELEV:5698.914

MARTIN J. GARCIA
NEW MEXICO
11767
REGISTERED PROFESSIONAL ENGINEER
11/30/17

Anchor Engineering, LLC
1035 S. Bosque Lp. Bosque Farms, NM 87068
505.362.1530

REVISIONS		
NO.	DATE	COMMENTS

PROJECT NO.	16-028
DATE:	11.30.17
DRAWN BY:	F PHILLIPS
CHECKED BY:	M GARCIA
SCALE:	1" = 40'

PROJECT TITLE: HWY 14 SENIOR CENTER
LOS CERRILLOS, NEW MEXICO

SHEET TITLE: GRADING PLAN

SHEET

C2.0

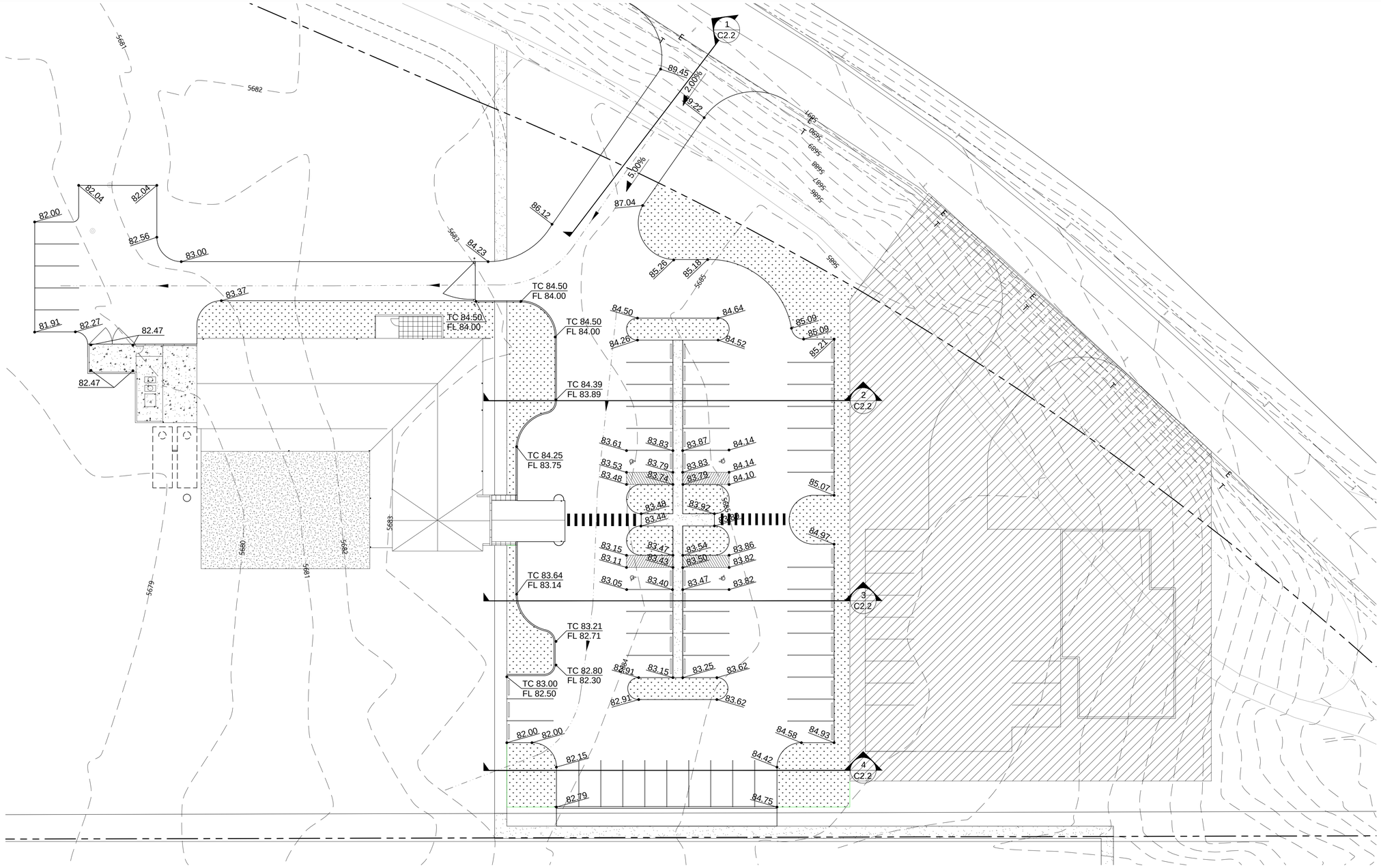

FINE GRADING PLAN

SCALE: 1" = 40'

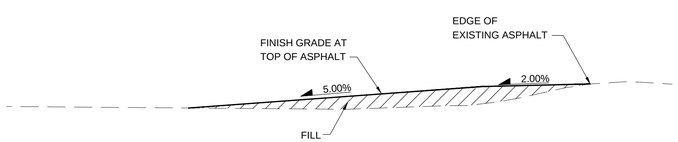

DRIVEPAD CROSS SECTION

1
C2.1

SCALE: NTS

General Notes

— — — —	PROPERTY BOUNDARY
- - 5680 - -	EXISTING CONTOUR
84.75 •	NEW SPOT ELEVATION
FF	FINISH FLOOR
TC	TOP OF CURB
FL	FLOW LINE
▨	FUTURE FIRE STATION PROJECT NOT PART OF THIS CONTRACT

MARTIN J. GARCIA
NEW MEXICO
11767
REGISTERED PROFESSIONAL ENGINEER
11/30/17

Anchor Engineering, LLC
1035 S. Bosque Lp. Bosque Farms, NM 87068
505.382.1530

NO.	DATE	COMMENTS

REVISIONS

PROJECT NO. 16-028
DATE: 11.30.17
DRAWN BY: F PHILLIPS
CHECKED BY: M GARCIA
SCALE: 1" = 40'

PROJECT TITLE: HWY 14 SENIOR CENTER
LOS CERRILLOS, NEW MEXICO

SHEET TITLE: FINE GRADING PLAN

SHEET
C2.1

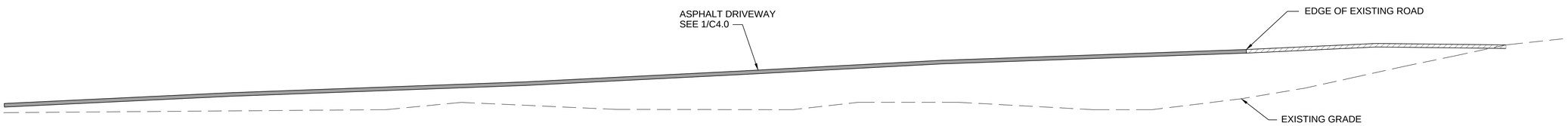

CROSS SECTION @ DRIVEWAY

1
C2.2

SCALE: 1" = 5'

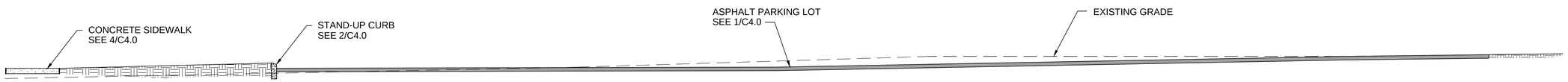

CROSS SECTION @ PARKING LOT

2
C2.2

SCALE: 1" = 5'

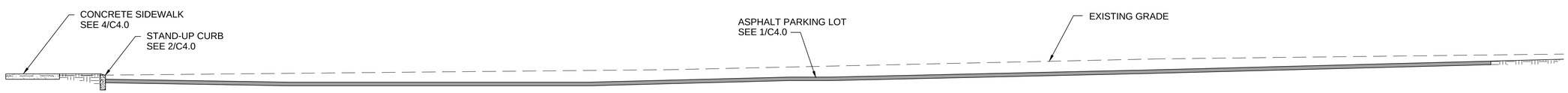

CROSS SECTION @ PARKING LOT

3
C2.2

SCALE: 1" = 5'

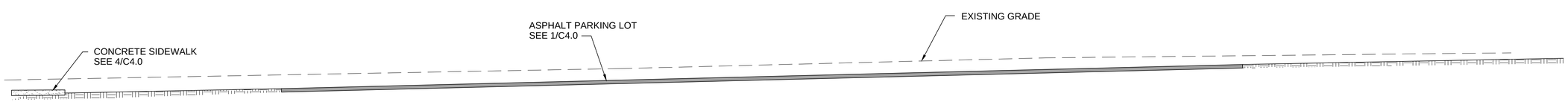

CROSS SECTION @ PARKING LOT

4
C2.2

SCALE: 1" = 5'

MARTIN J. GARCIA
NEW MEXICO
11767
REGISTERED PROFESSIONAL ENGINEER
11/30/17

Anchor Engineering, LLC
1035 S. Bosque Lp. Bosque Farms, NM 87068
505.362.1530

REVISIONS		
NO.	DATE	COMMENTS

PROJECT NO.	16-028
DATE:	11.30.17
DRAWN BY:	F PHILLIPS
CHECKED BY:	M GARCIA
SCALE:	1" = 5'

PROJECT TITLE
HWY 14 SENIOR CENTER
LOS CERRILLOS, NEW MEXICO

SHEET TITLE
CROSS SECTIONS

SHEET
C2.2

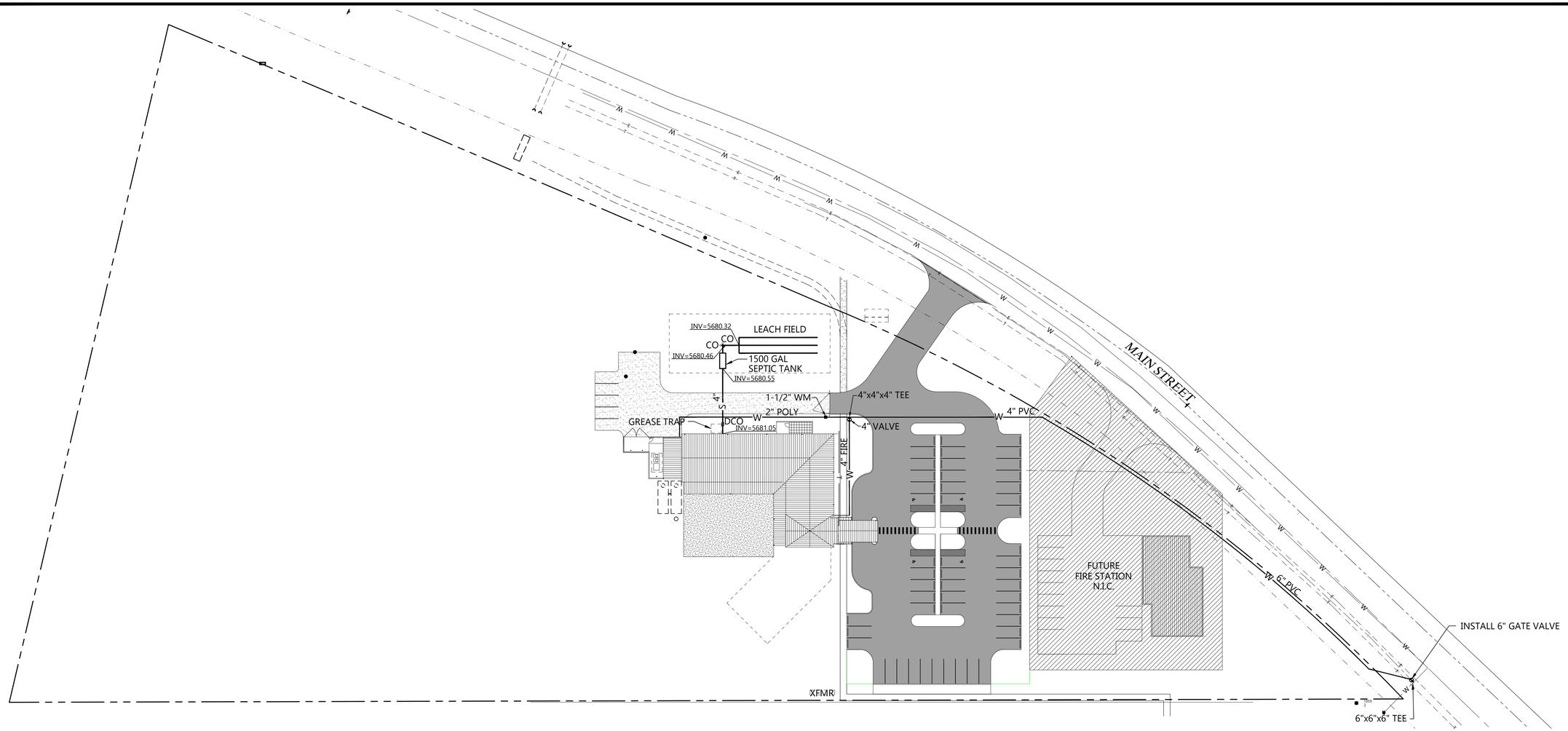

SITE UTILITY PLAN

SCALE: 1" = 40'

Septic Tank Criteria

TOTAL DRAINAGE FIXTURE UNITS: 47*
TOTAL GALLONS PER FIXTURE UNIT: 31.1

47x 31.1 = 1461.70 GALLONS/DAY

MINIMUM SEPTIC TANK SIZE REQUIRED: 1200 GAL**

RECOMMENDED SEPTIC TANK SIZE: 1500 GAL

* PER UNIFORM PLUMBING CODE TABLE 7-3 DRAINAGE FIXTURE UNIT VALUES (DFU)

** PER NEW MEXICO ENVIRONMENTAL PROTECTION WASTE WATER AND WATER SUPPLY FACILITIES LIQUID WASTE DISPOSAL AND TREATMENT 20.7.3.502

SEPTIC TANK MATERIALS LIST

QTY		ITEM	DESCRIPTION
1	EA	1500 GAL SEPTIC TANK	
18	LF	4" SDR 26 PVC	FROM SEPTIC OUTLET TO LEACH FIELD
188	LF	6" PERFORATED PVC PIPE	LEACH FIELD
2	EA	6" CLEANOUT	

General Notes

A. CONTACT NM811 7 DAYS PRIOR FOR VERIFICATION OF ALL EXISTING UTILITIES PRIOR TO CONSTRUCTION.

B. CONTRACTOR TO COORDINATE WITH VADITO DE LOS CERRILLOS WATER ASSOCIATION PRIOR TO CONNECTION OF NEW WATER LINE TO EXISTING.

Legend

- PROPERTY BOUNDARY
- w — EXISTING WATER LINE
- E — EXISTING UNDERGROUND ELECTRICAL
- T — EXISTING UNDERGROUND TELECOM
- W — NEW WATER LINE
- NEW GATE VALVE
- NEW WATER METER
- S — NEW SANITARY SEWER LINE
- DCO — DOUBLE CLEAN OUT

MARTIN J. GARCIA
NEW MEXICO
(11767)
REGISTERED PROFESSIONAL ENGINEER
11/30/17

Anchor Engineering, LLC
1035 S. Bosque Lp. Bosque Farms, NM 87068
505.362.1530

NO.	DATE	COMMENTS
1	12.8.17	REVISE DOMESTIC SERVICE LINE TO POLY PIPE

REVISIONS

PROJECT NO. 16-028
DATE: 11.30.17
DRAWN BY: F PHILLIPS
CHECKED BY: M GARCIA
SCALE: 1" = 40'

PROJECT TITLE: HWY 14 SENIOR CENTER
LOS CERRILLOS, NEW MEXICO

SHEET TITLE: SITE UTILITY PLAN

SHEET
C3.0

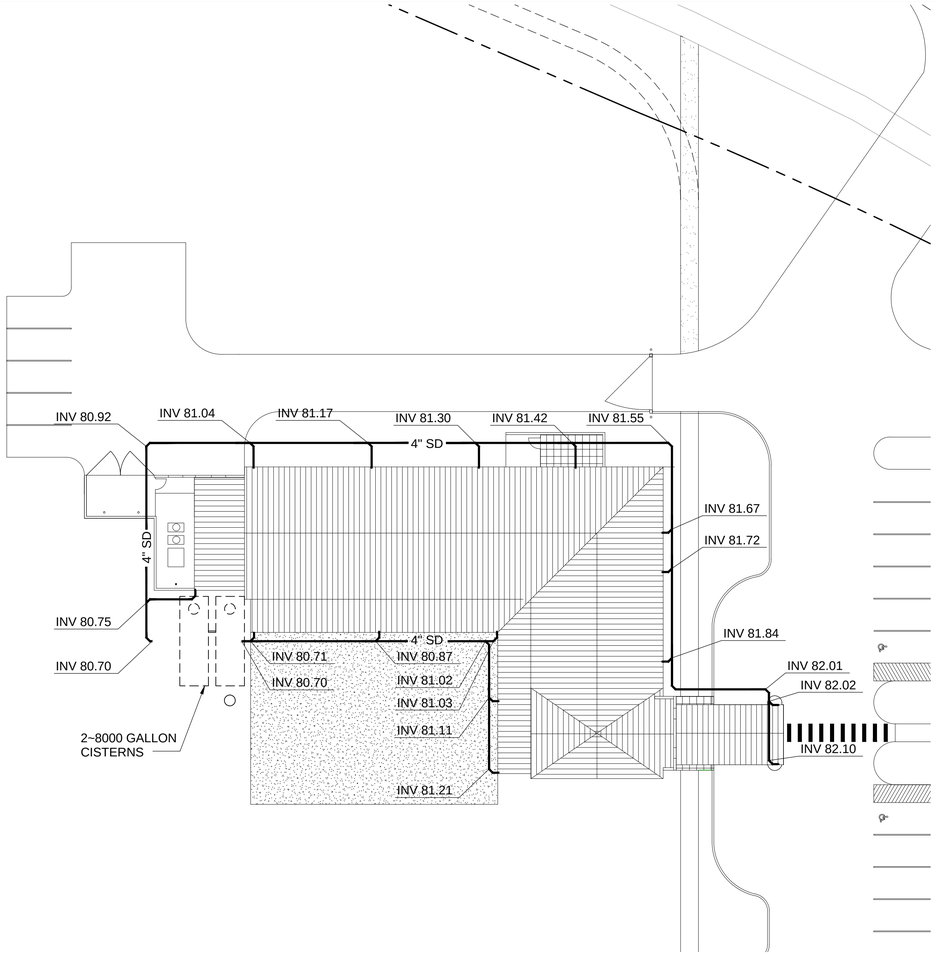

WATER HARVESTING PLAN

SCALE: 1" = 20'

DRAINAGE CALCULATIONS

(SCS Chapter 2 Method)

No water harvesting

Cerrillos Senior Center - ROOF DRAINAGE

PRE-DEVELOPMENT			POST-DEVELOPMENT		
Site Area:	0.1899	Ac	Site Area:	0.1899	Ac
Total Area	8270	Sq. Ft.	Total Area	8270	Sq. Ft.
Undisturbed Area:	8270	Sq. Ft.	Undisturbed Area:	0	Sq. Ft.
% of total Area:	100%		% of total Area:	0%	
CN of Undisturbed Area	**80**		CN of Undisturbed Area	**80**	
Weighted CN:		**80**	Weighted CN:		**0**
Roof/Pave/Walks Area	0	Sq. Ft.	Roof/Pave/Walks Area	8270	Sq. Ft.
% of total Area:	0%		% of total Area:	100%	
CN of Roof/Pave/Walks	**98**		CN of Roof/Pave/Walks	**98**	
Weighted CN:		**0**	Weighted CN:		**98**
Gravel Area	0	Sq. Ft.	Gravel Area	0	Sq. Ft.
% of total Area:	0%		% of total Area:	0%	
CN Gravel	**87**		CN Gravel	**87**	
Weighted CN:		**0**	Weighted CN:		**0**
Landscape	0	Sq. Ft.	Landscape	0	Sq. Ft.
% of total Area:	0%		% of total Area:	0%	
CN Landscape Area	**69**		CN Landscape Area	**69**	
Weighted CN:		**0**	Weighted CN:		**0**
Total Weighted CN:		**80**	Total Weighted CN:		**98**
Time of Concentration:	< 6 Min		Time of Concentration:	< 6 Min	
Unit discharge:	2.3	CFS/Ac-In	Unit discharge:	2.3	CFS/Ac-In
100 Yr 24 Hr Rainfall:	3.25	In	100 Yr 24 Hr Rainfall:	3.25	In
Direct runoff:	1.44	In	Direct runoff:	3.02	In
Peak Discharge:	0.63	CFS	Peak Discharge:	1.32	CFS
Runoff volume:	993	CF	Runoff volume:	2079	CF

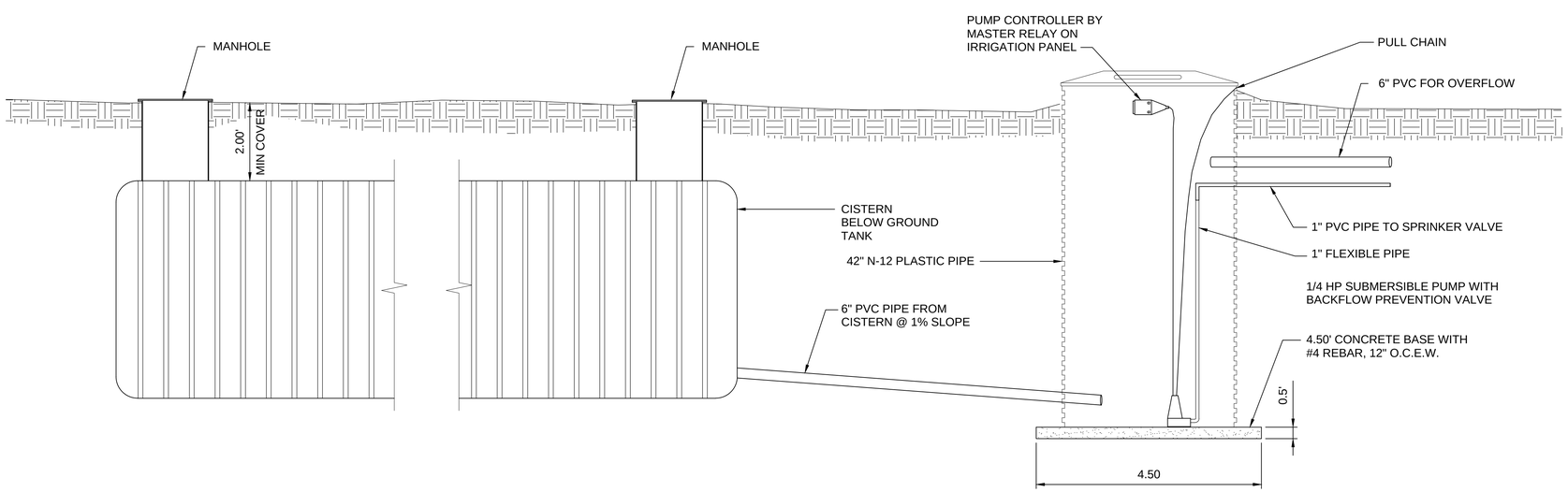

CISTERN DETAIL

SCALE: NTS

1
C3.1

General Notes

PRIOR TO ORDERING, CONTRACTOR TO SUBMIT ACTUAL MODEL AND TYPE OF CISTERN AND PUMP UNIT TO OWNER FOR APPROVAL.

MARTIN J. GARCIA
NEW MEXICO
(11767)
REGISTERED PROFESSIONAL ENGINEER
11/30/17

Anchor Engineering, LLC
1035 S. Bosque Lp. Bosque Farms, NM 87068
505.362.1530

NO.	DATE	COMMENTS
REVISIONS		

PROJECT NO. 16-028
DATE: 11.30.17
DRAWN BY: F PHILLIPS
CHECKED BY: M GARCIA
SCALE: 1" = 20'-0"

PROJECT TITLE: HWY 14 SENIOR CENTER
LOS CERRILLOS, NEW MEXICO

SHEET TITLE: WATER HARVESTING PLAN

SHEET
C3.1

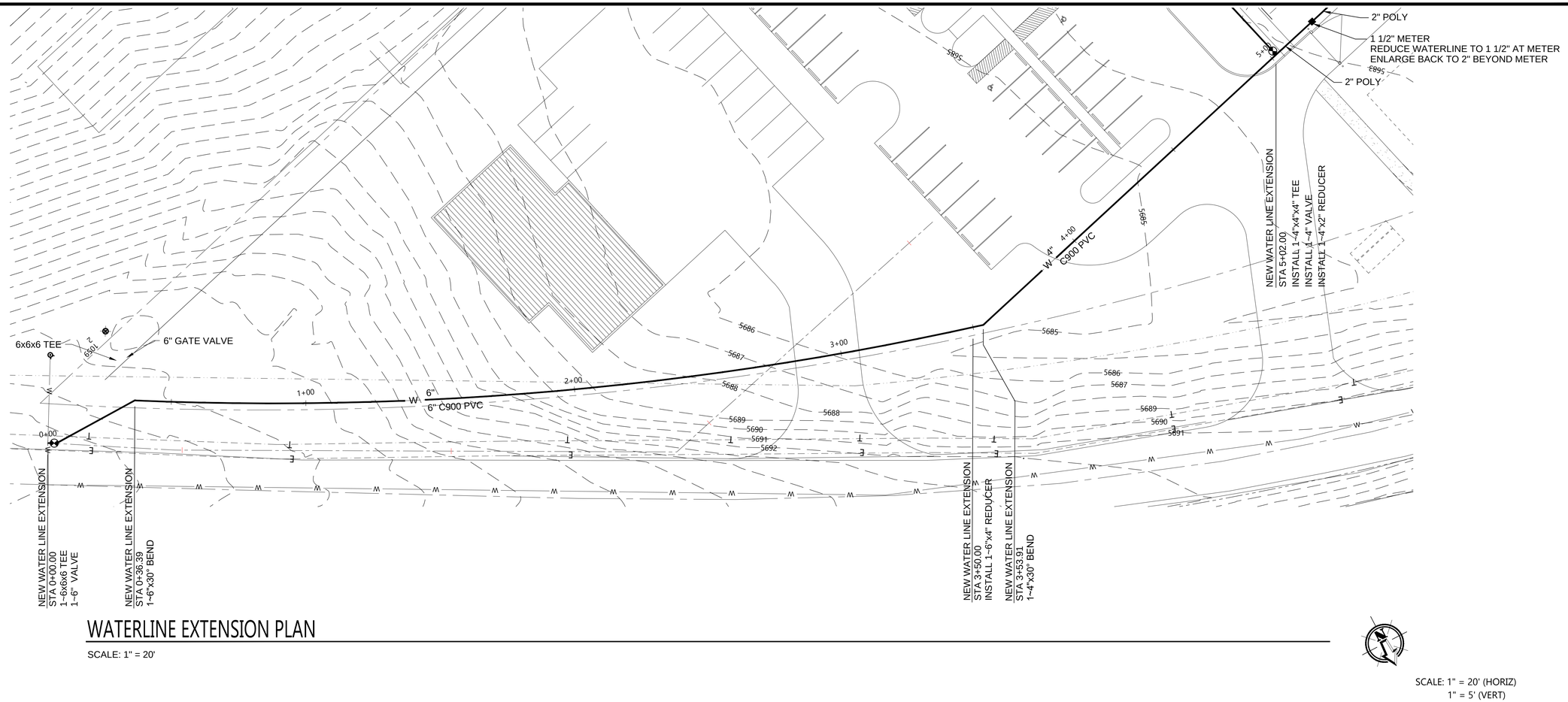

WATERLINE EXTENSION PLAN

SCALE: 1" = 20'

SCALE: 1" = 20' (HORIZ)
1" = 5' (VERT)

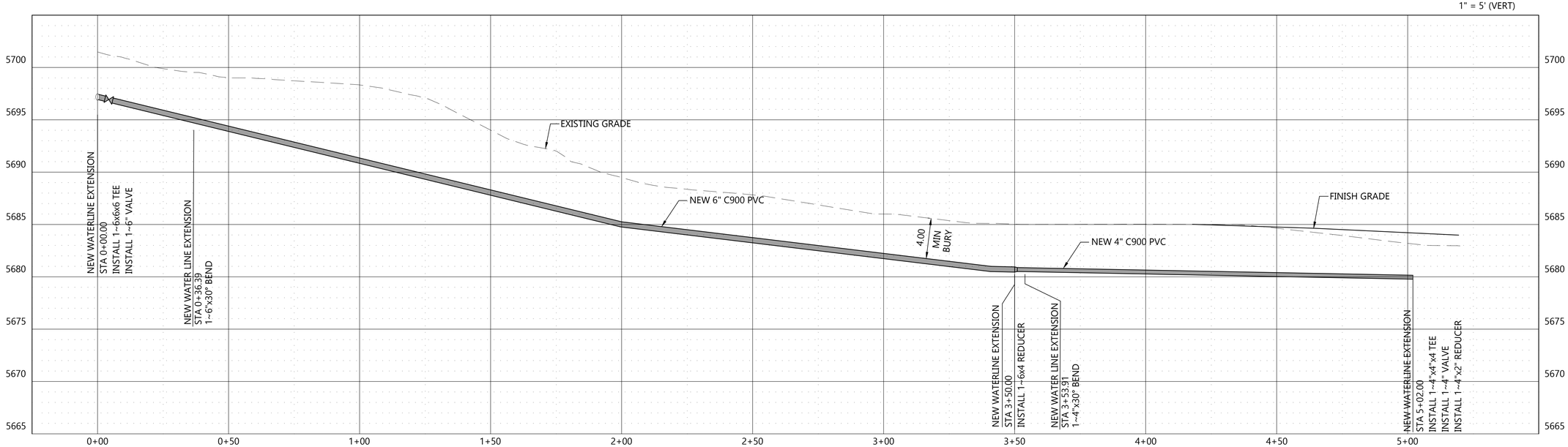

Anchor Engineering, LLC
1035 S. Bosque Lp. Bosque Farms, NM 87068
505.362.1530

REVISIONS		
NO.	DATE	COMMENTS

PROJECT NO.	16-028
DATE:	11.30.17
DRAWN BY:	F PHILLIPS
CHECKED BY:	M GARCIA
SCALE:	1" = 20'-0"

PROJECT TITLE: HWY 14 SENIOR CENTER
LOS CERRILLOS, NEW MEXICO

SHEET TITLE: WATERLINE EXTENSION PLAN AND PROFILE

SHEET

C3.2

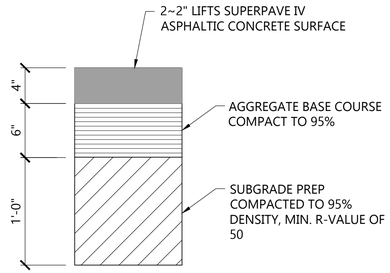

ASPHALT SECTION

SCALE: 1 1/2" = 1'-0"

1 / C4.0

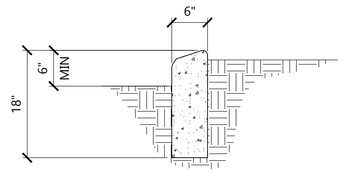

STAND UP CURB DETAIL

SCALE: 1 1/2" = 1'-0"

2 / C4.0

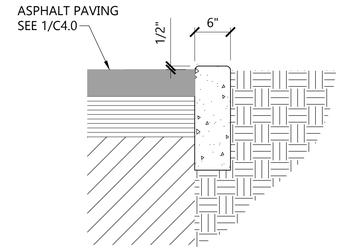

FLUSH CURB DETAIL

SCALE: 1 1/2" = 1'-0"

3 / C4.0

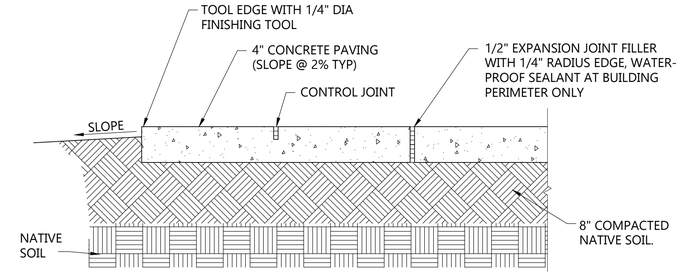

NOTE: PROVIDE TRANSVERSE CONTROL JOINTS AT INTERVALS NOT EXCEEDING 6'-0" ON CENTER, PROVIDE CENTERLINE CONTROL JOINTS IN SIDEWALK WIDER THAN 8'-0". SPACING OF CENTERLINE CONTROL JOINTS SHALL NOT EXCEED 6'-0" OR AS SHOWN ON PLANS. PROVIDE EXPANSION JOINTS AT INTERVALS NOT EXCEEDING 20'-0" ON CENTER WHERE WALK DOES NOT ABUT CURB.

SIDEWALK DETAIL

SCALE: 1 1/2" = 1'-0"

4 / C4.0

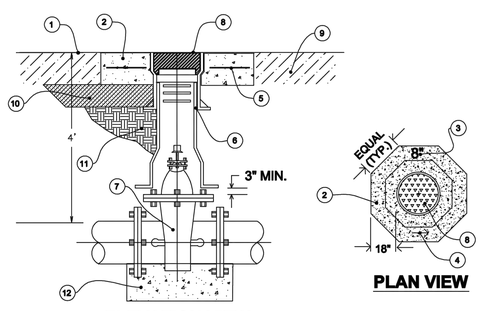

NOT TO SCALE

#	DESCRIPTION	#	DESCRIPTION
1	FINISH STREET GRADE	7	GATE VALVE
2	8" MIN DEPTH - 3000 PSI CONCRETE PAD	8	VALVE BOX LID
3	STAMPED LINE SIZE (2 SIZES IF REDUCING)	9	PAVEMENT
4	STAMPED ARROW INDICATING ISOLATION DIRECTION(?)	10	SUBGRADE
5	#4 REBAR	11	COMPACTED BACKFILL
6	5-1/4 SCREWTYPE ADJUSTING VALVE BOX	12	CONCRETE VALVE ANCHOR

SANTA FE COUNTY UTILITIES
STANDARD DETAILS

VALVE & VALVE BOX INSTALLATION

DATE: 2/2017

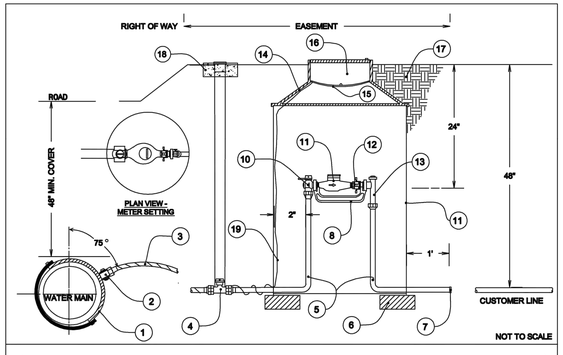

#	SIZE	DESCRIPTION
1	1"	SERVICE SADDLE - STAINLESS STEEL FULL WRAP AROUND - INSPECTION REQUIRED
2	1"	CORPORATION STOP (A.W.W.A. TAPERED THREAD)
3	1"	HDPE SERVICE TUBING, SIDOR 9 CTS BLUE, WITH 12 GAUGE TRACING WIRE
4	1"	BRASS CURB STOP
5	1"	COPPER TUBING
6		BLOCKS, USED AS NECESSARY
7		CUSTOMER CONNECTION - END OF EASEMENT (CAP IF NOT CONNECTING IMMEDIATELY)
8	1"	CAST IRON METER YOKE
9	24"D x 36"	METER CAN
10	1"	LOCKABLE ANGLE VALVE
11	1"	SEALED REGISTER WATER METER (FURNISHED & INSTALLED BY SFCU)
12	1"	EXPANSION CONNECTION (SIS"X34.T.R. CONN.)
13	1"	ANGEL CARTRIDGE WITH DUAL CHECK VALVE
14	30"D x 11-1/2"D	OUTER DOUBLE LID COVER - HAT
15		CONCAVE POLYMER FROST LID
16	12-5/16"	POLYMER LID - SINGLE HOLE COUNTER BORE CONFIGURATION
17		FINISHED GRADE AROUND METER CAN TO BE EARTHEN, NOT CONCRETE
18		CONCRETE COLLAR 12" DIAMETER BY 6" DEEP
19		NOTE: TRACING WIRE SHALL BE INSTALLED FROM MAIN TO FROST LID OF METER CAN ON ALL WATER SERVICE INSTALLATIONS. TRACING WIRE SHALL BE DUCT TAPED TO SERVICE LINE AND SIDE OF METER CAN.
*		NOTE: Customer shall install a customer owned Pressure Reducing Valve (PRV) and a back flow preventer in an above ground hot box between the meter can and the residence.

SANTA FE COUNTY UTILITIES
STANDARD DETAIL

1" SINGLE SERVICE

DATE: 2/2017

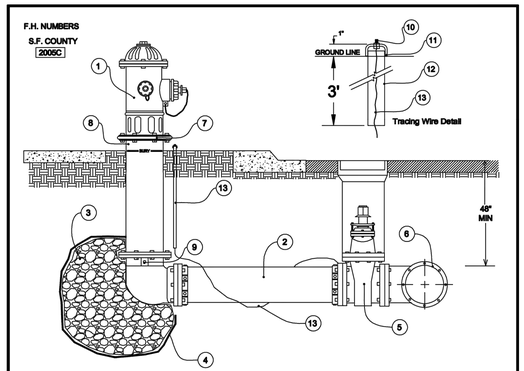

#	DESCRIPTION	#	DESCRIPTION
1	FIRE HYDRANT	8	2" MINIMUM 4" MAXIMUM GAP FROM FINISH GRADE TO BREAK AWAY JOINT
2	6" MINIMUM DUCTILE IRON PIPE*	9	DRAIN (DO NOT BLOCK)
3	1/2 CUBIC YARD 3/8" GRAVEL DRAIN	10	NUT AND BOLT WITH WIRE SECURED BY SILVER SOLDER
4	PERMEABLE GEOTEXTILE	11	GLUED PVC CAP
5	6" MINIMUM GATE VALVE	12	3/4" PVC
6	6" MINIMUM MECHANICAL JOINT TEE FITTING	13	#12 TRACING WIRE
7	BREAK-AWAY CONNECTION	*	ALL BURRIED DUCTILE IRON SHALL HAVE CATHODIC PROTECTION

SANTA FE COUNTY UTILITIES
STANDARD DETAILS

FIRE HYDRANT

DATE: 1/2017

MARTIN J. GARCIA
NEW MEXICO
11767
REGISTERED PROFESSIONAL ENGINEER
11/30/17

Anchor Engineering, LLC
1035 S. Bosque Lp. Bosque Farms, NM 87068
505.362.1530

REVISIONS			
NO.	DATE	COMMENTS	

PROJECT NO. 16-028
DATE: 11.30.17
DRAWN BY: M GARCIA
CHECKED BY: F PHILLIPS
SCALE: AS SHOWN

PROJECT TITLE
HWY 14 SENIOR CENTER
LOS CERRILLOS, NEW MEXICO

SHEET TITLE
SITE DETAILS

SHEET
C4.0

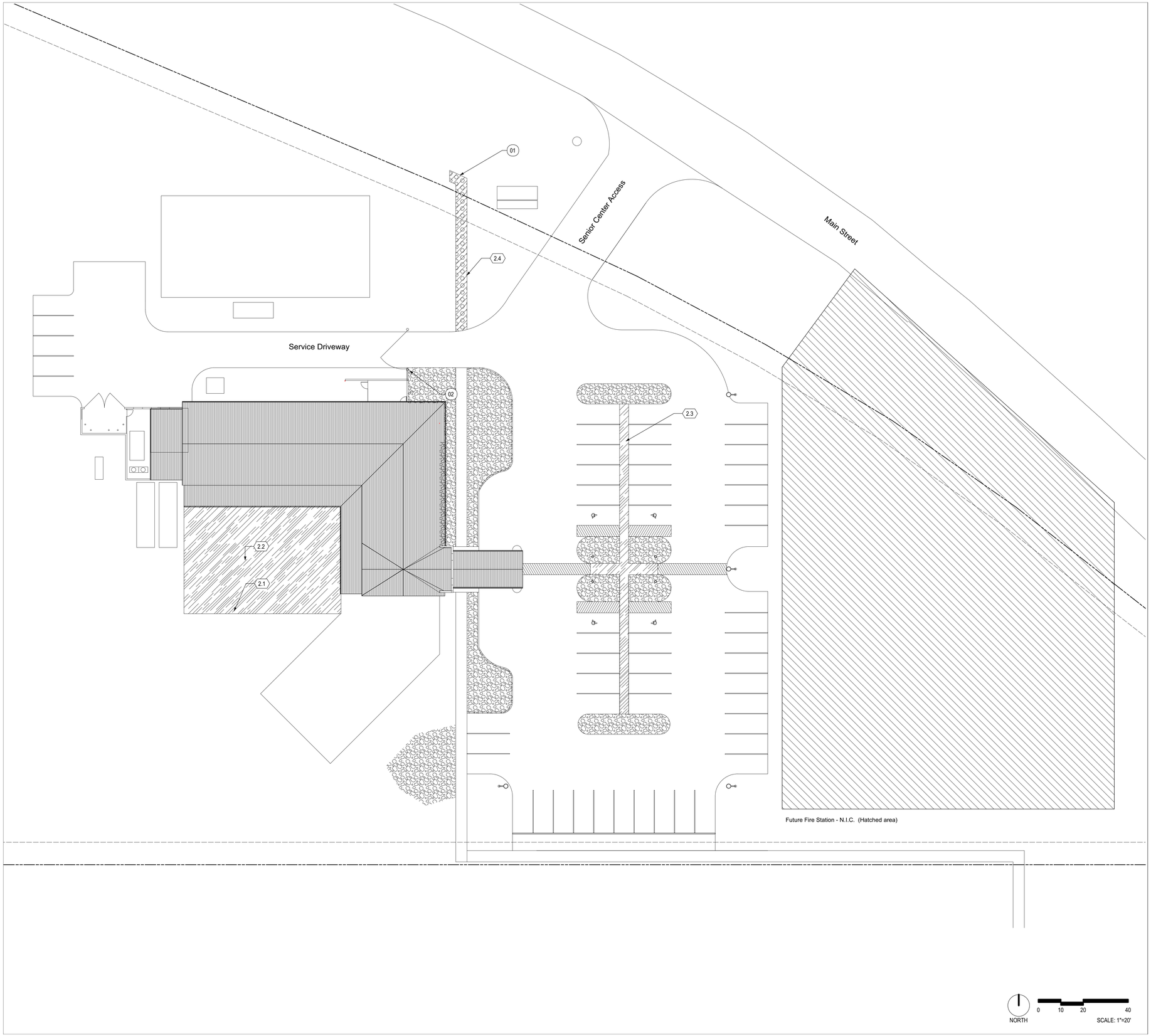

LAYOUT & MATERIALS NOTES

01. RUN COMPACTED BASE COURSE PATH TO EX. TRAIL
02. MOW CURB TO ALIGN WITH EDGE OF BUILDING

SITE DETAIL KEYNOTES

PAVEMENTS, CURBS, JOINTS

2.1.	STABILIZED CRUSHER FINES W/ STEEL EDGE	L4.1
2.2.	STABILIZED CRUSHER FINES AT TREES	L4.1
2.3.	STABILIZED CRUSHER FINES W/ ASPHALT & STEEL EDGE	L4.1
2.4.	BASE COURSE WITH SHOVEL CUT EDGE	L4.1

MATERIALS LEGEND

STABILIZED CRUSHER FINES - CANYON GOLD OR APPROVED EQUAL

BASE COURSE

6" - 8" AGGREGATE - CANYON GOLD OR APPROVED EQUAL

surroundings
landscape
architecture
urbanism

1600 lena street #E3
santa fe, nm 87505

t: 505 982 3454
f: 866 638 4578

REVISIONS:

NO	DATE	NOTE

Duplication or reproduction by any means without written consent of Surroundings Studio LLC is a violation of Federal and International law. The information contained on this document is the intellectual property of Surroundings Studio LLC and all rights thereto are Reserved. For exceptions, refer to the Surroundings Studio LLC Contract Provisions.

HWY 14 SENIOR CENTER

LOS CERRILLOS, NM

SCALE:	AS NOTED
DATE:	10/20/2017
PROJECT:	1299
DRAWN BY:	SRD

LAYOUT & MATERIALS PLAN

L 1.1

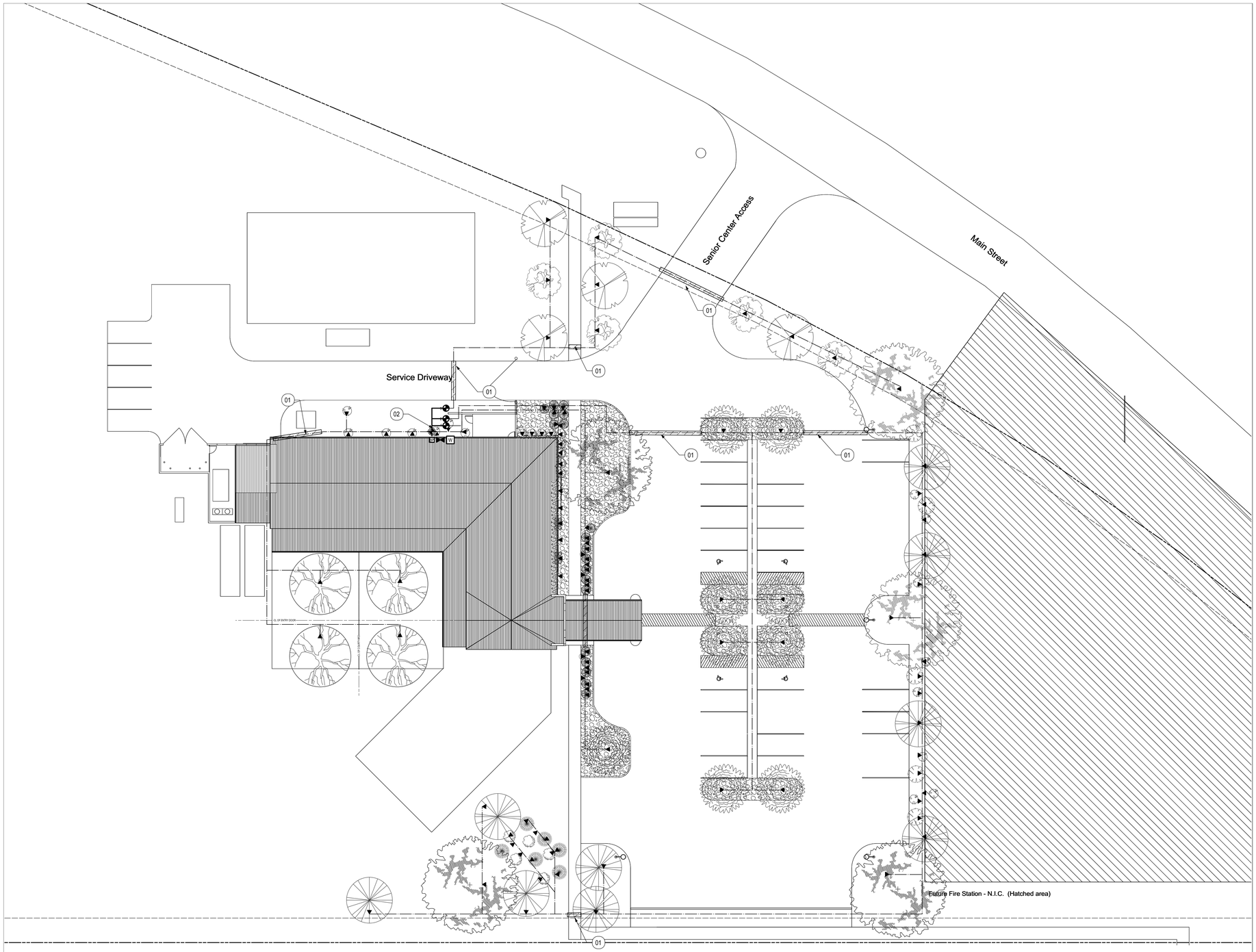

IRRIGATION LEGEND

- W — WATER METER
- C — IRRIGATION CONTROLLER
- BP — REDUCE PRESSURE BACK FLOW PREVENTOR
- MASTER VALVE
- GATE VALVE
- AUTOMATIC VALVE ASSEMBLY
- DRIP TEE EMITTER
- IRRIGATION MAIN LINE
- IRRIGATION LATERAL LINE
- IRRIGATION SLEEVE

IRRIGATION NOTES

01. SLEEVING TO BE INSTALLED PRIOR TO PAVING WORK BEGINS. SLEEVE TO BE DEPTH OF LINE BEING SLEEVED
02. CONNECT IRRIGATION TO CISTERN

NOTE:
TEST AND VERIFY THAT EXISTING WATER METER HAS GENERATED LEVEL OF WATER PRESSURE REQUIRED FOR NEW IRRIGATION SYSTEM

IRRIGATION EQUIPMENT SCHEDULE:

ITEM	MAKE	MODEL	SIZE	NOTES
CONTROLLER	RAINBIRD	ESP-SMTe	22 STATION	WALL MOUNTED (INSIDE MECH. ROOM)
BACKFLOW PREVENTER	FEBCO	825Y	1"	INSTALL PER LOCAL CODES, IN HOT BOX WITH HEAT TAPE
GATE VALVE	FEBCO	-	LINE SIZE	SIZE SAME AS UPSTREAM LINE, BRASS BODY, FEMALE THREADED
VALVE ASSEMBLY	RAINBIRD	PESB	SEE VALVE SCHEDULE	24 VOLT, AUTOMATIC REMOTE CONTROLLED VALVE NORMALLY CLOSED, LOW FLOW W/ 1" 'Y' FILTER 140M SCREEN, (1) BALL VALVE PER VALVE.
DRIP VALVE ASSEMBLY	RAINBIRD	XCZ-100-PRF	SEE VALVE SHCEDULE	24 VOLT, AUTOMATIC REMOTE CONTROLLED VALVE NORMALLY CLOSED, LOW FLOW W/ 1" 'Y' FILTER 140M SCREEN, (1) BALL VALVE PER VALVE.
DRIP TEE	-	-	-	PER DETAIL PROVIDE AT ALL LOCATIONS WHERE TRANSITION FROM PVC LATERAL TO PE DRIP LINES
MAINLINE - IRRIGATION	-	SCHE 40 PVC	1 1/2"	MIN 36" BURY DEPTH
LATERAL-IRRIGATION		SCHE 40 PVC	SEE SIZING CHART	MIN, 18" BURY DEPTH. SIZE AS PER CHART. 1" UNLESS OTHERWISE NOTED.
DRIP EMITER	RAINBIRD	RAINBUG	1/2" DIA	PROVIDE EMITTERS TO MEET EMITTER GPH RATES CHART

VALVE CHART

STATION NO.	GENERAL LOCATION	HEAD TYPE	VALVE SIZE	TOTAL ZONE GPM	PSI @ HEAD
1	NORTH PERIMETER	DRIP	1"	1.5	30
2	EAST PLANTERS	DRIP	1"	1.5	30
3	WEST PLANTERS	DRIP	1"	1.5	30

EMITTER SCHEDULE

PLANT TYPE	GPH
TREES	18
EVERGREEN TREES	8
ORNAMENTAL SHRUBS	4
NATIVE SHRUBS	2
ORNAMENTAL GRASS	2
PERENNIALS	1

PIPE CHART, SCHED. 40: PVC

PIPE SIZE	FLOW RATE
1"	0 to 12
1 1/4"	13 to 22
1 1/2"	23 to 30
2"	31 to 50
2 1/2"	51 to 75
3"	76 to 110

NORTH

0 10 20 40
SCALE: 1"=20'

surroundings
landscape
architecture
urbanism

1600 lena street #E3
santa fe, nm 87505

t: 505 982 3454
f: 866 638 4578

REVISIONS:

NO	DATE	NOTE

Duplication or reproduction by any means without written consent of Surroundings Studio LLC is a violation of Federal and International law. The information contained on this document is the intellectual property of Surroundings Studio LLC and all rights thereto are Reserved. For exceptions, refer to the Surroundings Studio LLC Contract Provisions.

HWY 14 SENIOR CENTER

LOS CERRILLOS, NM

SCALE: AS NOTED
DATE: 10/20/2017
PROJECT: 1299
DRAWN BY: SRD

IRRIGATION PLAN

L 1.2

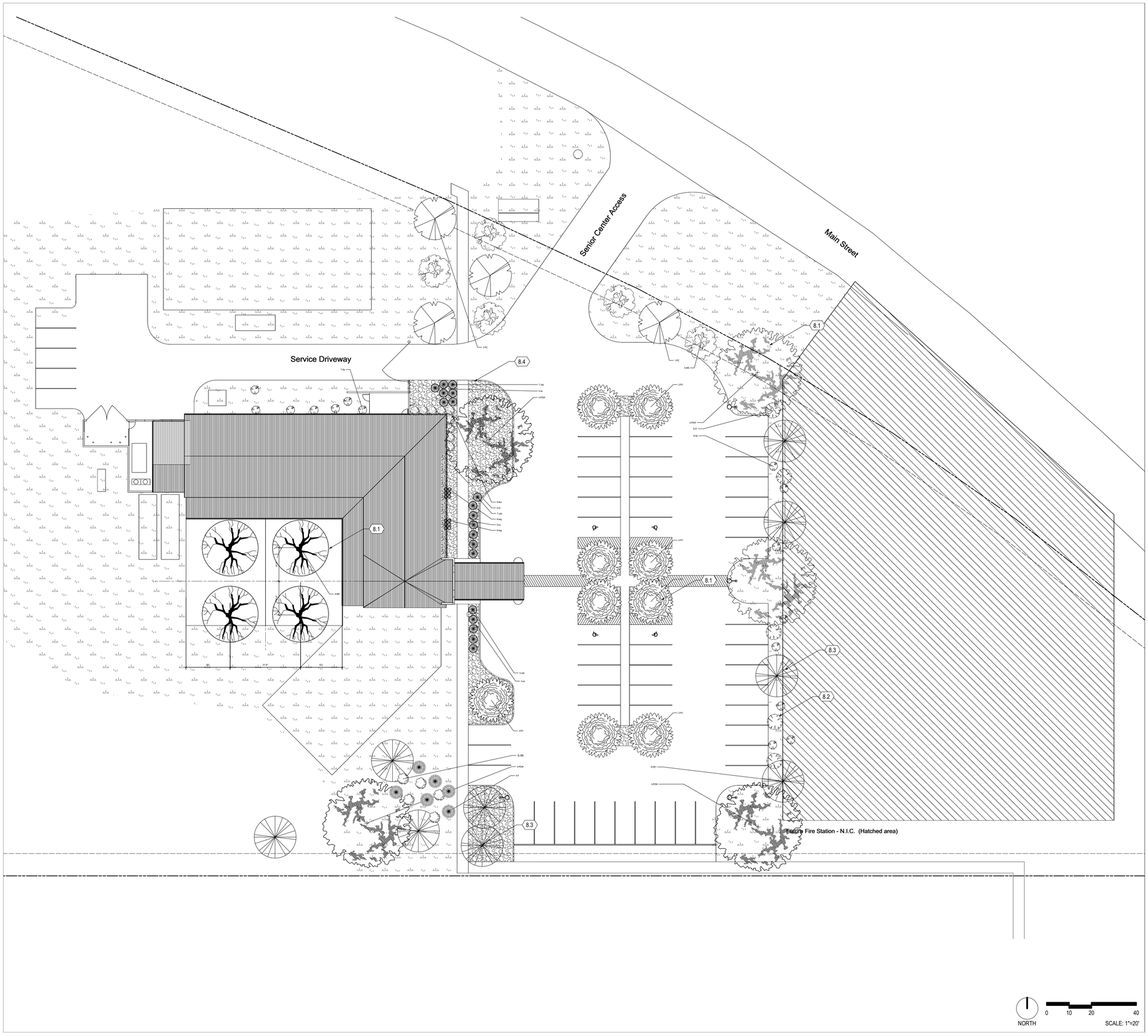

PLANTING DETAIL KEYNOTES

8.1.	TREE PLANTING	L7.1
8.2.	SHRUB PLANTING	L7.1
8.3.	EVERGREEN TREE PLANTING	L7.1
8.4.	LARGE COBBLE MULCH	L7.1
8.5.	SOIL PROFILE AT PLANTING BED	L7.1

PLANT PALETTE

TREES

SYMBOL	ID	QTY	BOTANICAL NAME	COMMON NAME	SIZE
	MD	4	Malus 'Dolgo'	Dolgo Crabapple	2 1/2" CA
	MS	5	Malus sylvestris 'Honeycrisp' Semi Dwarf	Honeycrisp Apple Tree	1 1/2" CA
	PC	4	Prunus cerasus 'Montmorency'	Montmorency Cherry	1 1/2" CA
	PDW	11	Populus deltoides wislezenii	Rio Grande Cottonwood	2 1/2" CA
	PE1	9	Pinus edulis	Pinon Pine	8 FT
	PV	11	Prunus virginiana 'Schubert'	Schubert Chokecherry	Multi

SHRUBS

SYMBOL	ID	QTY	BOTANICAL NAME	COMMON NAME	SIZE
	Ap	15	Fallugia paradoxa	Apache Plume	5 gal
	Cl	9	Cercocarpus lefifolius	Curlleaf Mountain Mahogany	5 Gallon
	F	6	Chamaebatiaria millifolium	Fernbush	5 GA
	Jsb	19	Juniperus horizontalis 'Bar Harbour'	Bar Harbour Juniper	5 gallon
	Rm	9	Rhus aromatica	Gro-Low Sumac	5 Gallon
	Rt	5	Rhus trilobata	Three Leaf Sumac	5 Gallon
	ss	13	Schizacrium scoparium	Little Bluestem Grass	1 Gallon

SEED MIX LEGEND

NATIVE DRYLAND GRASS SEED MIX, PLANTS OF THE SOUTHWEST, HYDROSEED WITH NATURAL GRASS STRAW (CERTIFIED) AS COVERING

GENERAL SITE PLANTING NOTE

REMOVE TOP 3" OF TOPSOIL AT EXCAVATION AREAS AND STOCKPILE FOR PLANTING AREAS.

surroundings
landscape
architecture
urbanism

1600 lena street #E3
santa fe, nm 87505

t: 505 982 3454
f: 866 638 4578

REVISIONS:

NO	DATE	NOTE

Duplication or reproduction by any means without written consent of Surroundings Studio LLC is a violation of Federal and International law. The information contained on this document is the intellectual property of Surroundings Studio LLC and all rights thereto are Reserved. For exceptions, refer to the Surroundings Studio LLC Contract Provisions.

HWY 14 SENIOR CENTER

LOS CERRILLOS, NM

SCALE:	AS NOTED
DATE:	10/20/2017
PROJECT:	1299
DRAWN BY:	SRD

PLANTING PLAN

L 1.3

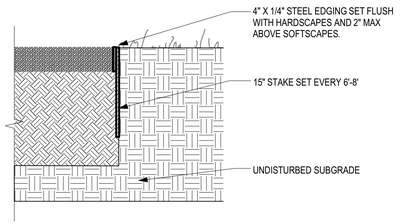

2.1 STABILIZED CRUSHER FINES WITH STEEL EDGE
NTS

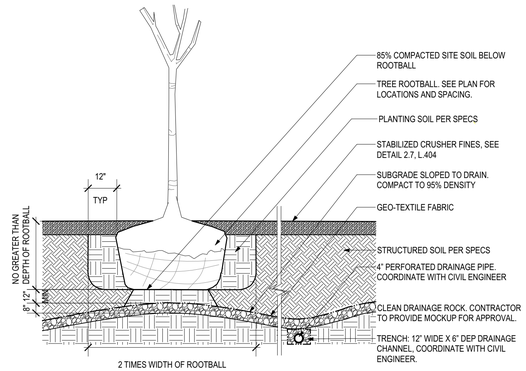

2.2 STABILIZED CRUSHER FINES AT TREES
NTS

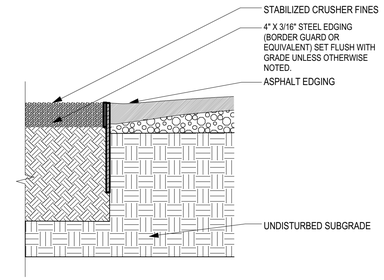

2.3 STABILIZED CRUSHER FINES WITH ASPHALT & STEEL EDGE
NTS

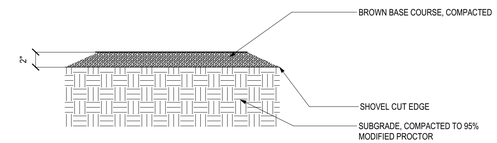

2.4 BASE COURSE WITH SHOVEL CUT EDGE
NTS

surroundings
landscape
architecture
urbanism

1600 lena street #E3
santa fe, nm 87505

t: 505 982 3454
f: 866 638 4578

REVISIONS:

NO	DATE	NOTE

Duplication or reproduction by any means without written consent of Surroundings Studio LLC is a violation of Federal and International law. The information contained on this document is the intellectual property of Surroundings Studio LLC and all rights thereto are Reserved. For exceptions, refer to the Surroundings Studio LLC Contract Provisions.

HWY 14 SENIOR CENTER

LOS CERRILLOS, NM

SCALE:	AS NOTED
DATE:	10/20/2017
PROJECT:	1299
DRAWN BY:	SRD

SITE DETAILS

L5.1

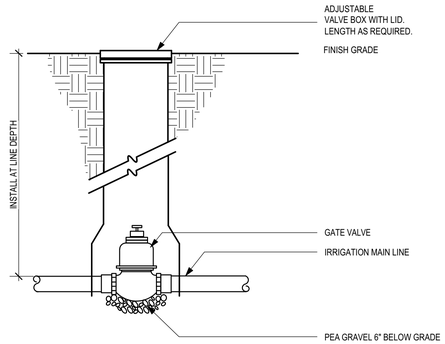

7.1 GATE VALVE
NTS

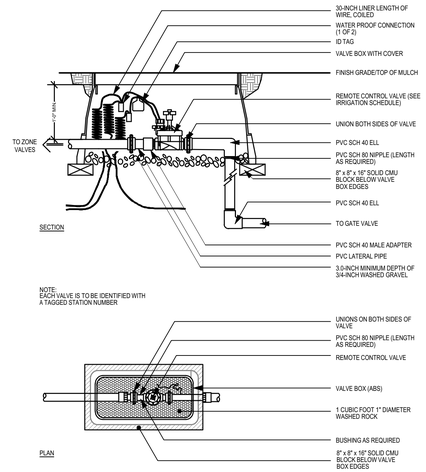

7.2 MASTER CONTROL VALVE
NTS

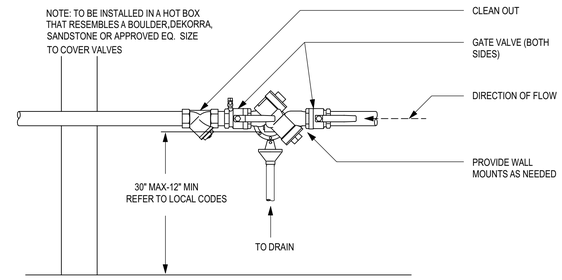

7.3 REDUCED PRESSURE BACKFLOW PREVENTER
NTS

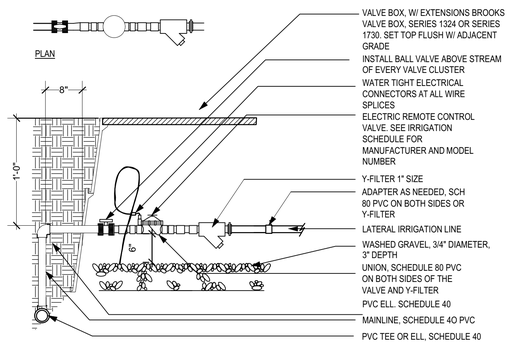

7.4 DRIP VALVE ASSEMBLY
NTS

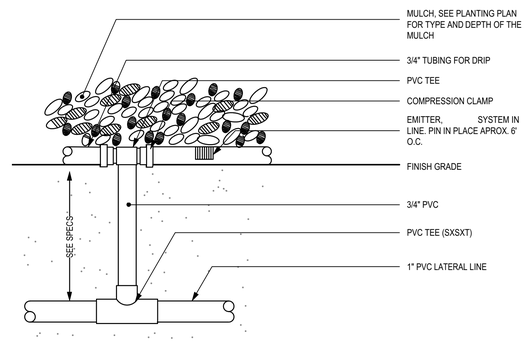

7.5 DRIPLINE TEE
NTS

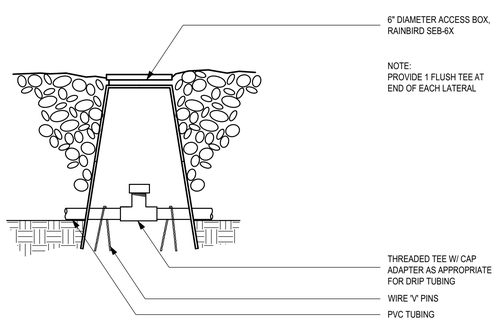

7.6 DRIP LINE FLUSH
NTS

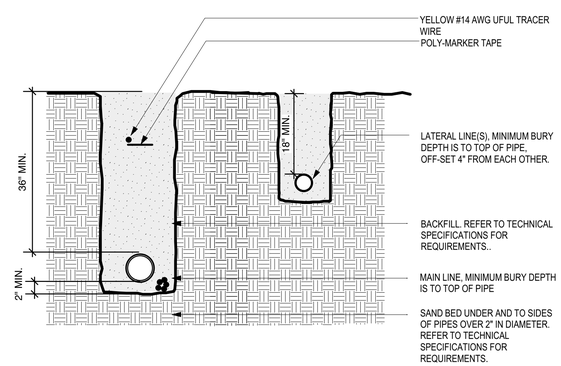

7.7 IRRIGATION PIPE BURY
NTS

NOTES:
1. ALL WIRING TO BE INSTALLED AS PER LOCAL CODE.
2. SEE MANUFACTURER'S MANUAL FOR MOUNTING INSTRUCTIONS.
3. PROVIDE 120-VOLT AND GROUND CONNECTIONS TO CONTROLLER
4. 24-VOLT CONNECTIONS INSIDE CABINET
5. CONTROLLER TO BE WALL MOUNTED.
6. 5/8"X8'-0" COPPER-CLAD GROUNDING ROD SHALL BE INSTALLED PER MANUFACTURER'S RECOMMENDATIONS.
7. PROVIDE LAMINATED ZONE CHART AFFIXED TO INSIDE COVER
8. PLACE ZONE WIRING ALONG NORTH OR EAST SIDES OF IRRIGATION PIPING WHERE PRACTICAL

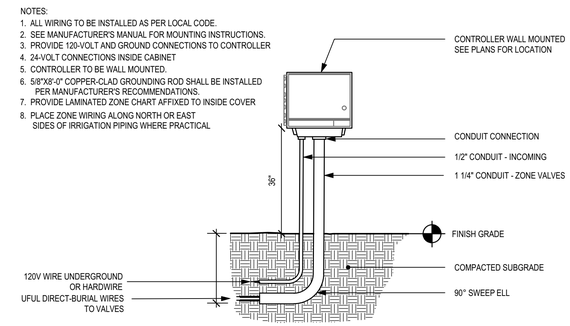

7.8 CONTROLLER
NTS

surroundings
landscape
architecture
urbanism
1600 lena street #E3
santa fe, nm 87505
t: 505 982 3454
f: 866 638 4578

REVISIONS:

NO	DATE	NOTE

Duplication or reproduction by any means without written consent of Surroundings Studio LLC is a violation of Federal and International law. The information contained on this document is the intellectual property of Surroundings Studio LLC and all rights thereto are Reserved. For exceptions, refer to the Surroundings Studio LLC Contract Provisions.

HWY 14 SENIOR CENTER

LOS CERRILLOS, NM

SCALE:	AS NOTED
DATE:	10/20/2017
PROJECT:	1299
DRAWN BY:	SRD

IRRIGATION DETAILS

L 5.2

NOTE:
PROVIDE STAKING AS SPECIFIED, ONLY WHEN DETERMINED NECESSARY DUE TO EXISTING CLIMATE CONDITIONS SUCH AS WIND OR IN A SWALE OR DRAINAGE WAY.

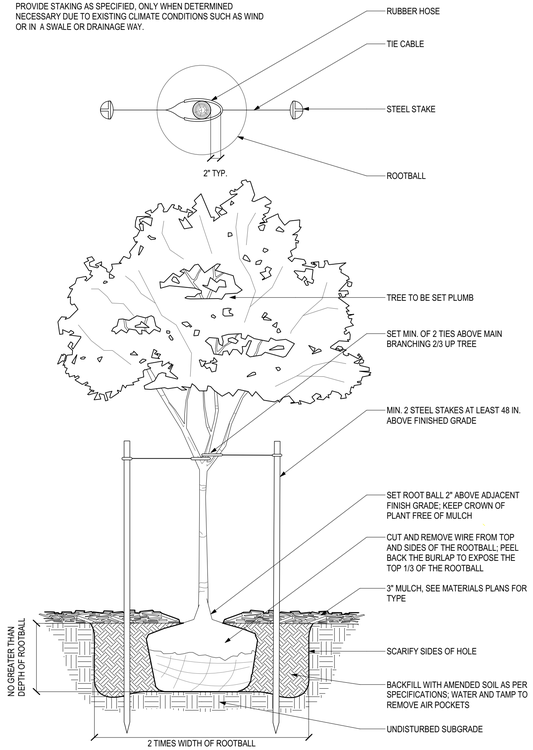

8.1 TREE PLANTING
NTS

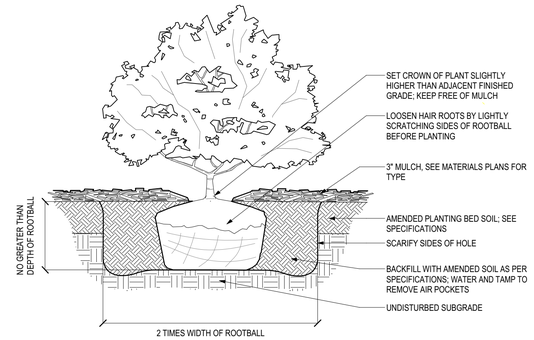

8.2 SHRUB PLANTING
NTS

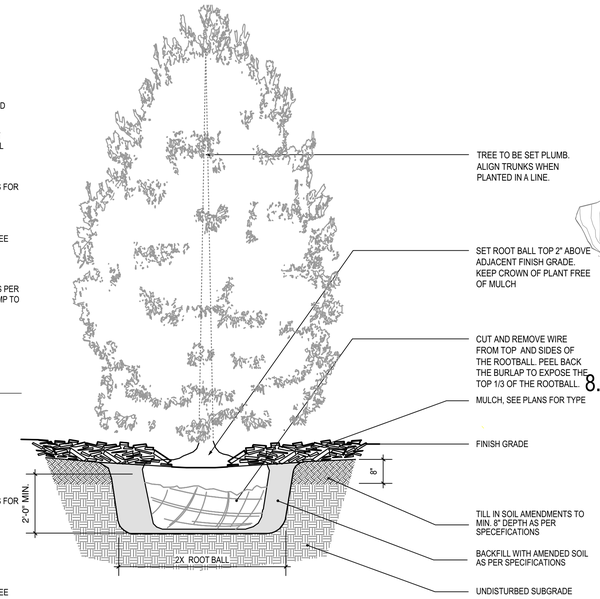

8.3 EVERGREEN TREE PLANTING
NTS

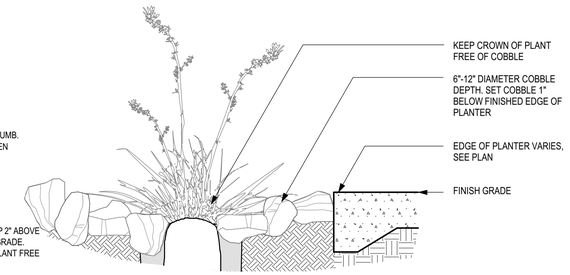

8.4 COBBLE MULCH
NTS

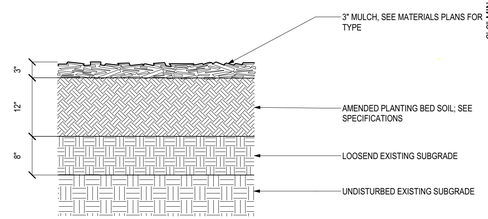

8.5 SOIL PROFILE AT PLANTING BED
NTS

surroundings
landscape
architecture
urbanism
1600 lena street #E3
santa fe, nm 87505
t: 505 982 3454
f: 866 638 4578

REVISIONS:

NO	DATE	NOTE

Duplication or reproduction by any means without written consent of Surroundings Studio LLC is a violation of Federal and International law. The information contained on this document is the intellectual property of Surroundings Studio LLC and all rights thereto are Reserved. For exceptions, refer to the Surroundings Studio LLC Contract Provisions.

HWY 14 SENIOR CENTER

LOS CERRILLOS, NM

SCALE:	AS NOTED
DATE:	10/20/2017
PROJECT:	1299
DRAWN BY:	SRD

PLANTING DETAILS

L 5.3

STRUCTURAL GRAPHIC SYMBOLS

SECTION CROSS-REFERENCE SYMBOL

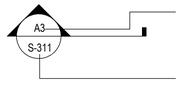

EXTERIOR ELEVATION CROSS-REFERENCE SYMBOL

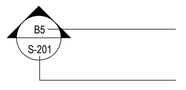

INTERIOR ELEVATION CROSS-REFERENCE SYMBOL

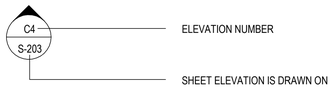

PLAN DETAIL CROSS-REFERENCE SYMBOL

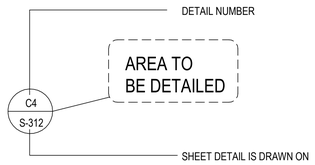

DETAIL CROSS-REFERENCE SYMBOL

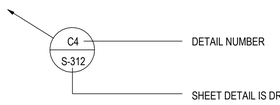

NORTH ARROW SYMBOL

KEYNOTE SYMBOL

ELEVATION TARGET SYMBOL

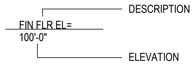

DRAWING TITLE SYMBOL

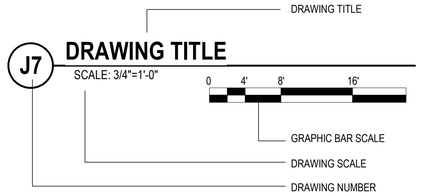

GRAPHIC BAR SCALE SYMBOL

STRUCTURAL GRID REFERENCE SYMBOL

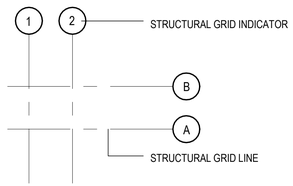

REVISION INDICATOR SYMBOL

BASE PLATE MARK SYMBOL

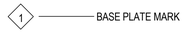

SPOT FOOTING MARK SYMBOL

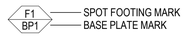

CONTINUOUS FOOTING MARK SYMBOL

WALL MARK SYMBOL

STRUCTURAL MATERIALS LEGEND

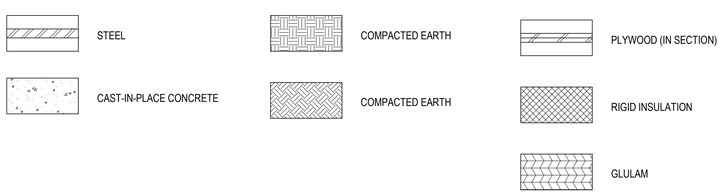

ABBREVIATIONS

A/E	ARCHITECT/ENGINEER
AB	ANCHOR BOLT
ABBRV	ABBREVIATION
AC	ASPHALTIC CONCRETE
ACI	AMERICAN CONCRETE INSTITUTE
ACP	ASPHALTIC CONCRETE PAVING
AD	AREA DRAIN
ADA	AMERICANS WITH DISABILITIES ACT
ADDL	ADDITIONAL
ADDM	ADDENDUM
ADJ	ADJACENT/ADJOINING
ADMIN	ADMINISTRATION
AFF	ABOVE FINISHED FLOOR
AFG	ABOVE FINISHED GRADE
AFS	ABOVE FINISHED SLAB
AGGR	AGGREGATE
AHR	ANCHOR
AIA	AMERICAN INSTITUTE OF ARCHITECTS
AISC	AMERICAN INSTITUTE OF STEEL CONSTRUCTION
AISI	AMERICAN IRON AND STEEL INSTITUTE
AITC	AMERICAN INSTITUTE OF TIMBER CONSTRUCTION
ALNMT	ALIGNMENT
ALT	ALTERNATE, ALTERNATIVE
ALUM	ALUMINUM
AMT	AMOUNT
ANSI	AMERICAN NATIONAL STANDARDS INSTITUTE
APA	AMERICAN PLYWOOD ASSOCIATION
APPD	APPROVED
APPROX	APPROXIMATE
APPX	APPENDIX
AR	AS REQUIRED
ARCH	ARCHITECT
ASCE	AMERICAN SOCIETY OF CIVIL ENGINEERS
ASPH	ASPHALT
ASI	ARCHITECT'S SUPPLEMENTAL INSTRUCTIONS
ASSN	ASSOCIATION
ASTM	AMERICAN SOCIETY FOR TESTING AND MATERIALS
ATCH	ATTACHMENT
ATTN	ATTENTION
AWS	AMERICAN WELDING SOCIETY
AZ	AZIMUTH
B&F	BELL AND FLANGE
BAL	BALANCE
B/B	BACK TO BACK
BC	BOTTOM CHORD
BD	BOARD
BDRY	BOUNDARY
BEV	BEVEL
BFF	BELOW FINISH FLOOR
BKG	BACKING
BKGD	BACKGROUND
BLD	BUILD
BLDG	UILDING
BLK	BLOCK/BLOCKING
BLT	BUILT
BLVD	BOULEVARD
BLW	BELOW
BM	BEAM
BO	BOTTOM OF
BOS	BOTTOM OF STEEL
BOT	BOTTOM
B PL	BASE PLATE
BRCG	BRACING
BRDG	BRIDGING
BRG	BEARING
BRG PL	BEARING PLATE
BS	BOTH SIDES
BSMT	BASEMENT
BT WLD	BUTT WELD
BTWN	BETWEEN
C	CHANNEL
C/C	CENTER TO CENTER
CAM	CAMBER
CAN	CANOPY
CD	CONSTRUCTION DOCUMENTS, CONTRACT DOCUMENTS
CEM	CEMENT
CHFR	CHAMFER
CHKD	CHECKED/CHECKERED
CI	CAST IRON
CIP	CAST-IN-PLACE
CJ	CONSTRUCTION JOINT
CJ	CONTRACTION JOINT
CJ	CONTROL JOINT
CL	CENTER LINE
CLG	CEILING
CLR	CLEAR
cm	CENTIMETER
CMU	CONCRETE MASONRY UNIT
CO	COMPANY
COA	CITY OF ALBUQUERQUE
COL	COLUMN
CONC	CONCRETE
CONN	CONNECTION
CONSTR	CONSTRUCTION
CONT	CONTINUOUS , CONTINUE
CONTR	CONTRACTOR
COORD	COORDINATE
CRSI	CONCRETE REINFORCING STEEL INSTITUTE
CSI	CONSTRUCTION SPECIFICATIONS INSTITUTE
CTR	CENTER
CTRL	CONTROL
CU	CUBIC
CU YD	CUBIC YARD
D	DEEP, DEPTH
D-B	DESIGN-BUILD
DAT	DATUM
DBL	DOUBLE
DEG	DEGREE
DEL	DELETE
DEMO	DEMOLITION
DET	DETAIL
DFTG	DRAFTING
DIA	DIAMETER
DIAG	DIAGONAL
DIFF	DIFFERENCE, DIFFERENTIAL
DIM	DIMENSION
DIST	DISTANCE
DIV	DIVIDE
DJ	DOUBLE JOIST
DL	DEAD LOAD

ABBREVIATIONS

DOUG FIR	DOUGLAS FIR
DSGN	DESIGN
DWG	DRAWING
DWL/DWLS	DOWELS
E	EAST, MODULUS OF ELASTICITY
EA	EACH
EE	EACH END
EF	EACH FACE
EIFS	EXTERIOR INSULATION AND FINISH SYSTEM
EJ	EXPANSION JOINT
EL	ELEVATION
ELAST	ELASTOMERIC
ELEC	ELECTRIC
ELEM	ELEMENTARY
ELEV	ELEVATOR
EMBED	EMBEDDED/EMBEDMENT
ENCL	ENCLOSURE
ENGR	ENGINEER
EOS	EDGE OF SLAB
EPA	ENVIRONMENTAL PROTECTION AGENCY
EQ	EQUAL
EQUIP	EQUIPMENT
EQUIV	EQUIVALENT
ESCAL	ESCALATOR
ESMT	EASEMENT
EST	ESTIMATE
EW	EACH WAY
EXC	EXCAVATE
EXCL	EXCLUDE
EXIST	EXISTING
EXP	EXPANSION
EXT	EXTERIOR
F/F	FACE TO FACE
FAB	FABRIC
FACIL	FACILITY
FB	FLAT BAR
FD	FLOOR DRAIN
FDTN	FOUNDATION
FF EL	FINISH FLOOR ELEVATION
FIN GR	FINISH GRADE
FIN	FINISH
FIN FLR	FINISH FLOOR
FLG	FLANGE
FLR	FLOOR
FLR SK	FLOOR SINK
FOC	FACE OF CONCRETE
FOF	FACE OF FINISH
FOM	FACE OF MASONRY
FOS	FACE OF SLAB
FOS	FACE OF STUD
FOW	FACE OF WALL
FR	FRAME
FRMG	FRAMING
FS	FAR SIDE
FSTNR	FASTENER
FT	FOOT / FEET
FT/LB	FOOT/POUND
FT/LBF	FOOT/POUND FORCE
FTG	FOOTING
FUT	FUTURE
G	GIRDER
GA	GAGE
GALV	GALVANIZED
GALV STL	GALVANIZED STEEL
GR BM	GRADE BEAM
GC	GENERAL CONTRACTOR
GEN	GENERAL
GLU LAM	GLUED LAMINATED WOOD
GLZ	GLAZING
GOVT	GOVERNMENT
GRTG	GRATING
GT	GROUT
H	HIGH
HAS	HEADED ANCHOR STUD
HC	HOLLOW-CORE
HCP	HANDICAPPED
HD	HEAVY DUTY
HGR	HANGER
HLDN	HOLDDOWN
HORIZ	HORIZONTAL
HS	HIGH STRENGTH
HSKPG	HOUSEKEEPING
HSS	HOLLOW STRUCTURAL SECTIONS
HST	HOIST
HT	HEIGHT
IBC	INTERNATIONAL BUILDING CODE
ID	INSIDE DIAMETER
IF	INSIDE FACE
IFS	INSIDE FACE OF STUD
IN	INCH
INFO	INFORMATION
IN-LB	INCH-POUND
IN-LBF	INCH-POUND FORCE
INSTL	INSTALL
INSUL	INSULATION
INT	INTERIOR
IR	INSIDE RADIUS
k	KIP
K	THOUSAND
KB	KNEE BRACE
KCJ	KEYED CONTROL JOINT
KIP	THOUSAND POUNDS
KIP FT	THOUSAND FOOT/POUNDS
KLF	KIPS PER LINEAL FOOT
KO	KNOCK OUT
KOP	KNOCK OUT PANEL
KSF	KIPS PER SQUARE FOOT
KSI	KIPS PER SQUARE INCH
L	ANGLE
LAM	LAMINATE
LATL	LATERAL
LBF	POUND-FORCE
LBR	LUMBER
LBS	POUND
LD BRG	LOAD BEARING
LF	LINEAR FEET (FOOT)
LIN	LINEAR
LL	LIVE LOAD
LLBB	LONG LEG BACK TO BACK
LLH	LONG LEG HORIZONTAL
LLV	LONG LEG VERTICAL

ABBREVIATIONS

LT GA	LIGHT GAGE
LT WT	LIGHT WEIGHT
LVR	LOUVER
LWC	LIGHTWEIGHT CONCRETE
M	MOMENT
MAINT	MAINTENANCE
MATL	MATERIAL
MAX	MAXIMUM
MB	MACHINE BOLT
MC	MOMENT CONNECTION
MCJ	MASONRY CONTROL JOINT
MD	METAL DECK
ME	MECHANICAL ENGINEER
MECH	MECHANICAL
MEZZ	MEZZANINE
MFR	MANUFACTURER
MID	MIDDLE
MIN	MINIMUM
MISC	MISCELLANEOUS
ML	MICRO-LAMINATED
ML	MONOLITHIC
MO	MASONRY OPENING
MSL	MEAN SEA LEVEL
MTL	METAL
N	NORTH
NA	NOT APPLICABLE
NF	NEAR FACE
NIC	NOT IN CONTRACT
NM	NEW MEXICO
NO	NUMBER
NOM	NOMINAL
NTS	NOT TO SCALE
O/O	OUT TO OUT
OA	OVERALL
OC	ON CENTER
OD	OUTSIDE DIAMETER
OF	OUTSIDE FACE
OFS	OUTSIDE FACE OF STUD
OPH	OPPOSITE HAND
OPNG	OPENING
OPP	OPPOSITE
OPT	OPTIONAL
OR	OUTSIDE RADIUS
PAR	PARALLEL, PARAPET
PART	PARTIAL
PC	PIECE, PORTLAND CEMENT
PCC	PRECAST CONCRETE
PCF	POUNDS PER CUBIC FOOT
PCI	PRECAST/PRESTRESSED CONCRETE INSTITUTE
PED	PEDESTAL
PEN	PENETRATE
PERIM	PERIMETER
PERP	PERPENDICULAR
PH	PHASE
PIL	PILASTER
PL	PLATE
PLBG	PLUMBING
PLF	POUNDS PER LINEAR FOOT
PLM	PARALLAM
PLYWD	PLYWOOD
POS	POSITION
PP	PANEL POINT
PRCST	PRECAST
PREFAB	PREFABRICATE
PRELIM	PRELIMINARY
PREV	PREVIOUS
PSF	POUNDS PER SQUARE FOOT
PSI	POUNDS PER SQUARE INCH
PT	POST-TENSIONED
PT CONC	POST-TENSIONED CONCRETE
PTN	PARTITION
PVG	PAVING
QUAD	QUADRANT
R	RADIUS, RISER
RC	REINFORCED CONCRETE
RD	ROAD, ROOF DRAIN
REC	RECESSED
REF	REFERENCE
REINF	REINFORCE/REINFORCEMENT
REPL	REPLACE
REQ	REQUIRE
REQD	REQUIRED
REV	REVISION
RGD INS	RIGID INSULATION
RFI	REQUEST FOR INFORMATION
RND	ROUND
RO	ROUGH OPENING
RT	RIGHT
RVL	REVEAL
S	SOUTH
SCHEM	SCHEMATIC
SCHED	SCHEDULE
SD	SHOP DRAWINGS
SDI	STEEL DECK INSTITUTE
SE	STRUCTURAL ENGINEER
SECT	SECTION
SF	SQUARE FEET (FOOT)
SHT	SHEET, SHAFT
SHTHG	SHEATHING
SIM	SIMILAR
SJI	STEEL JOIST INSTITUTE
SLNT	SEALANT
SM	SMOOTH
SP	SUMP PIT
SPA	SPACE/SPACES
SPEC	SPECIFICATION
SPRT	SUPPORT
SQ	SQUARE
SQ IN	SQUARE INCH
SQ YD	SQUARE YARD
SSPC	STRUCTURAL STEEL PAINTING COUNCIL
ST	STAIRS
STAG	STAGGERED
STD	STANDARD
STIF	STIFFENER
STIR	STIRRUP
STL	STEEL
STL LNTL	STEEL LINTEL
STL	JST STEEL JOIST
STL PL	STEEL PLATE

ABBREVIATIONS

STRUCT	STRUCTURAL
SUB	SUBSTITUTE
SUF	SUFFICIENT
SUP	SUPPLEMENTARY
SUPPL	SUPPLEMENT
SYM	SYMBOL
SYMM	SYMMETRICAL
SYS	SYSTEM
T	TREAD
T&B	TOP AND BOTTOM
T&G	TONGUE AND GROOVE
TAN	TANGENT
TB	THRU BOLT
TEMP	TEMPORARY
THD	THREAD
THK	THICKNESS
THRU	THROUGH
TJI	TRUSS JOIST INSTITUTE
TO	TOP OF
TOB	TOP OF BEAM
TOC	TOP OF CONCRETE
TOC FTG	TOP OF CONCRETE FOOTING
TOC WALL	TOP OF CONCRETE WALL
TOF	TOP OF FOOTING
TOG	TOP OF GRATE
TOJ	TOP OF JOIST
TOL	TOLERANCE
TOM	TOP OF MASONRY
TOP	TOP OF PARAPET
TOS	TOP OF SLAB
TOS	TOP OF STEEL
TOW	TOP OF WALL
TRANS	TRANSVERSE
TRNBKL	TURNBUCKLE
TYP	TYPICAL
UBC	UNIFORM BUILDING CODE
UNO	UNLESS NOTED OTHERWISE
VAR	VARIES
VERT	VERTICAL
VIF	VERIFY IN FIELD
VNR	VENEER
VR	VAPOR RETARDER
VRFY	VERIFY
W	WEST, WIDE
W/	WITH
W/O	WITHOUT
WBL	WOOD BLOCKING
WD	WOOD
WF	WIDE FLANGE
WF BM	WIDE FLANGE BEAM
WL	WIND LOAD
WLD	WELDED
WM	WIRE MESH
WP	WATERPROOFING
WSCT	WAINSCOT
WT	WEIGHT
WWF	WELDED WIRE FABRIC
WWM	WELDED WIRE MESH
X BRACE	CROSS BRACING
XXH	DOUBLE EXTRA HEAVY
YD	YARD

100% CONSTRUCTION DOCUMENTS

Chavez-Grieves
consulting engineers, inc.
4700 LINCOLN RD NE STE 102 • ALBUQUERQUE, NM 87109
PHONE (505) 344-4080 • FAX (505) 343-8759

autotroph
architecture.planning.sustainable design consulting

No.	Description	Date

Hwy 14 Senior Center

ABBREVIATIONS AND LEGEND

Project Number	1606
Date	10/20/2017
Drawn By	ADM/PS
Checked By	GHB

S0.1

GENERAL FOUNDATION NOTES

FOUNDATION NOTES

GENERAL:

A SUBSURFACE SOIL INVESTIGATION HAS BEEN MADE BY GEO-TEST, PROJECT NO.1-70414.

A REPORT OF THAT INVESTIGATION DATED MAY 23, 2017 IS AVAILABLE FOR VIEWING AT THE OFFICE OF THE ARCHITECT.

THE FOUNDATION SYSTEM FOR THIS PROJECT IS SPREAD FOOTINGS OVER ENGINEERED FILL.

ADDITIONAL INFORMATION CONCERNING SPECIFIC SOIL CONDITIONS TO BE ENCOUNTERED IS AVAILABLE IN THE SOILS REPORTS AND SHALL BE REVIEWED BY THE CONTRACTOR.

FIELD OBSERVATION AND TESTS:

THE OWNER SHALL EMPLOY THE SERVICES OF A REGISTERED, LICENSED GEOTECHNICAL ENGINEER TO OBSERVE ALL CONTROLLED EARTHWORK. THE GEOTECHNICAL ENGINEER SHALL PROVIDE CONTINUOUS ON-SITE OBSERVATION BY EXPERIENCED PERSONNEL DURING CONSTRUCTION OF CONTROLLED EARTHWORK. THE CONTRACTOR SHALL NOTIFY THE GEOTECHNICAL ENGINEER AT LEAST TWO WORKING DAYS IN ADVANCE OF ANY FIELD OPERATIONS OF THE CONTROLLED EARTHWORK.

TESTS OF MATERIALS SHALL BE MADE AT THE FOLLOWING MINIMUM RATES. THE ON-SITE GEOTECHNICAL ENGINEER SHALL DETERMINE THE ACTUAL TESTING RATES:

ONE FIELD DENSITY TEST PER 2500 SQUARE FEET OF COMPACTED SUBGRADE, PRIOR TO PLACING STRUCTURAL FILL OR SLAB-ON-GRADE, WITH A MINIMUM OF 3 TESTS.

ONE FIELD DENSITY TEST PER 2500 SQUARE FEET OF STRUCTURAL FILL PLACED OR EACH HORIZONTAL LAYER OF STRUCTURAL FILL, WHICHEVER IS GREATER.

ONE MOISTURE-DENSITY CURVE FOR EACH TYPE OF MATERIAL USED, AS INDICATED BY THE SIEVE ANALYSIS AND THE PLASTICITY INDEX.

THE GEOTECHNICAL ENGINEER SHALL SUBMIT THE RESULTS OF ALL REQUIRED TESTS.

CLEARING AND GRUBBING:

REMOVE ALL BRUSH, RUBBISH, GRASS, AND GRASS ROOTS FROM THE CONSTRUCTION AREA.

REMOVE STUMPS, MATTED ROOTS AND ROOTS LARGER THAN 2 INCHES IN DIAMETER WITHIN 6 INCHES OF THE SURFACE OF AREAS ON WHICH FILL AND/OR FOOTINGS ARE TO BE CONSTRUCTED.

REMOVE ALL TOPSOIL FROM THE CONSTRUCTION AREA. THIS MATERIAL SHALL NOT BE USED AS FILL MATERIAL, BUT MAY BE STOCKPILED AND LATER USED IN THE TOP 6 INCHES OF FILL OUTSIDE THE BUILDING PAD.

SITE, SUBFLOOR AND BEARING SURFACE PREPARATION:

A REPRESENTATIVE OF THE GEOTECHNICAL ENGINEER SHALL BE PRESENT TO CONFIRM COMPLETE EXCAVATION OF ANY UNCONTROLLED FILL.

OVEREXCAVATE ALL SOILS UNDERLYING FOOTINGS AND FLOOR SLAB AND ALL UNCONTROLLED FILL TO A MINIMUM DEPTH OF 2 FEET.

OVEREXCAVATE ALL SOILS UNDERLYING SITE RETAINING WALL FOOTINGS TO A MINIMUM DEPTH OF 2 FEET.

SCARIFY ALL EXPOSED SUBGRADE SOILS TO A DEPTH OF 12 INCHES, MOISTEN TO OPTIMUM MOISTURE CONTENT (+/- 2%) AND COMPACT TO THE DENSITY SPECIFIED HEREINAFTER.

PLACE ALL STRUCTURAL FILL IN APPROXIMATELY HORIZONTAL LAYERS NOT GREATER THAN 8 INCHES IN LOOSE THICKNESS, OR 4 INCHES IF HAND HELD COMPACTION EQUIPMENT IS USED, MOISTEN TO OPTIMUM MOISTURE CONTENT (+/- 2%) AND COMPACT TO DENSITY SPECIFIED HEREINAFTER.

ALL EARTHWORK FOR THE BUILDING PAD SHALL EXTEND A MINIMUM OF 5 FEET BEYOND THE PERIMETER FOOTINGS.

STRUCTURAL FILL REQUIREMENTS:

GRADATION (ASTM D422):

SIEVE SIZE	PERCENT PASSING BY WEIGHT
3"	100
NO. 4	60-100
NO. 200	20-50

PLASTICITY INDEX (ASTM D4318): 15 MAXIMUM

NO BRUSH, SOD, FROZEN MATERIAL OR OTHER UNSUITABLE MATERIAL SHALL BE PLACED IN THE STRUCTURAL FILL. MATERIAL SHALL BE PLACED IN SUCH A MANNER AS TO RESULT IN A UNIFORMLY COMPACTED FILL.

IMPORTED FILL OR EXISTING SOILS MAY BE USED FOR THE STRUCTURAL FILL. HOWEVER, IN ORDER TO MEET THE ABOVE CRITERIA, THE ON SITE SOILS WILL PROBABLY NEED TO BE MIXED WITH IMPORTED FILL. IT IS THE CONTRACTORS RESPONSIBILITY TO DETERMINE THE MOST APPROPRIATE METHOD TO PROVIDE THE REQUIRED STRUCTURAL FILL.

FILL OR BACKFILL, SHOULD BE PLACED IN 8 INCH LOOSE LIFTS AND COMPACTED WITH APPROVED COMPACTION EQUIPMENT. LIFTS SHOULD BE REDUCED TO 4 INCHES IF HAND HELD COMPACTION EQUIPMENT IS USED. EACH LIFT SHOULD BE FIRM AND NON-YIELDING.

GENERAL FOUNDATION NOTES

COMPACTION REQUIREMENTS:

IN ACCORDANCE WITH ASTM D1557 (MODIFIED PROCTOR), SUBGRADE SOILS AND STRUCTURAL FILL MATERIALS SHALL BE COMPACTED TO THE FOLLOWING PERCENTAGES OF THE MAXIMUM DRY DENSITY AT (+/- 2%) OPTIMUM MOISTURE CONTENT:

MATERIAL	MINIMUM PERCENT COMPACTION
STRUCTURAL FILL IN THE BUILDING AREA	95
SUBBASE FOR SLAB SUPPORT	95
SUBGRADE BELOW STRUCTURAL FILL	95
MISCELLANEOUS BACKFILL	95

SITE RETAINING WALL DESIGN CRITERIA:

LOADING CONDITION	EQUIVALENT FLUID PRESSURE
PASSIVE EARTH PRESSURE	325 PCF
SOIL FRICTION FACTOR	0.4
SOIL BEARING CAPACITY	2000 PSF

GENERAL STRUCTURAL NOTES

CODES AND MANUALS:

IBC-15 INTERNATIONAL BUILDING CODE 2015
ASCE/SEI 7-10 MINIMUM DESIGN LOADS FOR BUILDINGS AND OTHER STRUCTURES
AISC 360-10 SPECIFICATION FOR STRUCTURAL STEEL BUILDINGS
AISC 341-10 SEISMIC PROVISIONS FOR STRUCTURAL STEEL BUILDINGS
AISC MANUAL OF STEEL CONSTRUCTION 14TH EDITION
AISI S100-12 NORTH AMERICAN SPECIFICATION FOR THE DESIGN OF COLD-FORMED STEEL STRUCTURAL MEMBERS
AISI S200-12 NORTH AMERICAN STANDARD FOR COLD-FORMED STEEL FRAMING – GENERAL PROVISIONS
AISI S211-07 NORTH AMERICAN STANDARD FOR COLD-FORMED STEEL FRAMING – WALL STUD DESIGN WITH 2012 SUPPLEMENT
AISI S212-12 NORTH AMERICAN STANDARD FOR COLD-FORMED STEEL FRAMING – HEADER DESIGN
AISI S213-12 NORTH AMERICAN STANDARD FOR COLD-FORMED STEEL FRAMING – LATERAL DESIGN WITH 2010 SUPPLEMENT
ACI 318-14 BUILDING CODE REQUIREMENTS FOR STRUCTURAL CONCRETE
NDS-15 NATIONAL DESIGN SPECIFICATION FOR WOOD CONSTRUCTION
AWS D1.1-04 STRUCTURAL WELDING CODE – STEEL
AWS D1.4-11 STRUCTURAL WELDING CODE – REINFORCING STEEL
ACI 530-13 BUILDING CODE REQUIREMENTS FOR MASONRY STRUCTURES
ACI 530-13 SPECIFICATIONS FOR MASONRY STRUCTURES

DESIGN CRITERIA:

VERTICAL:

ROOF LIVE LOAD: LR = 20*R1*R2	20 PSF
REDUCTION FACTOR BASED ON TRIB AREA	R1=1.0
REDUCTION FACTOR BASED ON ROOF SLOPE	R2=1.0
ADDITIONAL 10 PSF FOR FUTURE PHOTOVOLTAIC LOAD	

SNOW LOAD	
GROUND SNOW LOAD	PG=25 PSF
PITCHED ROOF SNOW LOAD**	PF=25 PSF
SNOW EXPOSURE FACTOR	CE=1.0
SNOW LOAD IMPORTANCE FACTOR	IS=1.0
THERMAL FACTOR	CT=1.0
**INCLUDES 5 PSF RAIN-ON SNOW SURCHARGE LOAD	
FUTURE ROOF PHOTOVOLTAIC LOAD	5 PSF

HORIZONTAL:

WIND	
BASIC WIND SPEED	115 MPH
RISK CATEGORY	II
EXPOSURE	C
INTERNAL PRESSURE COEFFICIENT	GCPI=0.18
STRUCTURE IS FLEXIBLE	
SEISMIC	
SEISMIC IMPORTANCE FACTOR	IS = 1.0
MAPPED SPECTRAL RESPONSE ACCELERATIONS	
SHORT PERIOD	SS=0.443G
1 SECOND PERIOD	S1=0.134G
SITE CLASS	D
SPECTRAL RESPONSE COEFFICIENTS	
SHORT PERIOD	SDS=0.427G
1 SECOND PERIOD	SD1=0.203G
SEISMIC DESIGN CATEGORY	D
BASIC SEISMIC FORCE RESISTING SYSTEM:	

BEARING WALL SYSTEM – LIGHT-FRAME COLD-FORMED STEEL WALLS WITH WOOD STRUCTURAL PANELS.

SEISMIC RESPONSE COEFFICIENT	CS=0.066
RESPONSE MODIFICATION FACTOR	R = 6.5
DESIGN BASE SHEAR	V = 0.066W
ANALYSIS PROCEDURE: EQUIVALENT LATERAL FORCE	

ALLOWABLE SOIL BEARING PRESSURE = 2000 PSF

FROST DEPTH = 24 INCHES

FUTURE BUILDING EXPANSION: NONE

GENERAL:

STRUCTURAL DRAWINGS ARE NOT STAND-ALONE DOCUMENTS AND ARE INTENDED TO BE USED IN CONJUNCTION WITH CIVIL, ARCHITECTURAL, MECHANICAL, ELECTRICAL, AND DRAWINGS FROM OTHER DISCIPLINES. THE CONTRACTOR SHALL COORDINATE ALL REQUIREMENTS OF THE CONTRACT DOCUMENTS INTO THE SHOP DRAWINGS AND FIELD WORK.

COORDINATE DIMENSIONS OF ALL OPENINGS, DEPRESSIONS, BLOCKOUTS, ETC. WITH ARCHITECTURAL DRAWINGS, DRAWINGS FROM OTHER DISCIPLINES, PROJECT SHOP DRAWINGS, AND FIELD CONDITIONS PRIOR TO SHOP DRAWING SUBMITTAL THE STRUCTURAL DRAWINGS ONLY REPRESENT A PORTION OF THE REQUIREMENTS FOR THE PROJECT.

SEE ARCHITECTURAL PLANS FOR INTERIOR NON-BEARING PARTITION WALLS. PARTITION FRAMING SHALL BE CONNECTED TO THE PRIMARY STRUCTURE TO ALLOW FOR VERTICAL LIVE LOAD DEFLECTIONS OF SPAN/360 FOR FLOOR FRAMING AND SPAN/240 FOR ROOF FRAMING.

CONTRACTOR'S CONSTRUCTION AND/OR ERECTION SEQUENCES SHALL RECOGNIZE AND CONSIDER THE EFFECTS OF THERMAL MOVEMENTS OF STRUCTURAL ELEMENTS DURING THE CONSTRUCTION PERIOD.

THE CONTRACTOR SHALL VERIFY ALL DIMENSIONS IN THE FIELD.

SHOP DRAWINGS SHALL BE FURNISHED AND REVIEWED BEFORE ANY FABRICATION OR ERECTION IS STARTED. THE CONTRACTOR SHALL REVIEW AND APPROVE SHOP DRAWINGS PRIOR TO SUBMITTAL TO THE ARCHITECT FOR REVIEW. POORLY EXECUTED SHOP DRAWINGS WILL BE REJECTED AND SHALL BE RESUBMITTED.

THE CONTRACTOR SHALL BE RESPONSIBLE FOR PROVIDING SAFE AND ADEQUATE SHORING FOR ALL PARTS OF THE STRUCTURE DURING CONSTRUCTION.

TEMPORARY PROVISIONS SHALL BE MADE FOR STRUCTURAL STABILITY DURING CONSTRUCTION. THE STRUCTURE SHOWN ON THE DRAWINGS HAS BEEN DESIGNED FOR STABILITY UNDER FINAL CONFIGURATION.

GENERAL STRUCTURAL NOTES

NOTCHING OR CUTTING ANY STRUCTURAL MEMBER IN THE FIELD IS PROHIBITED.

THE CONTRACTOR SHALL VERIFY THE SIZE AND LOCATION OF FOUNDATIONS UNDER MECHANICAL AND ELECTRICAL EQUIPMENT AS REQUIRED. NO CONCRETE PADS SHALL BE LOCATED ON ROOF UNLESS SHOWN ON THE STRUCTURAL DRAWINGS.

BACKFILL SHALL NOT BE PLACED BEHIND RETAINING WALLS UNTIL CONCRETE HAS ATTAINED 100 PERCENT OF DESIGN STRENGTH.

REMOVAL OF FORMS AND SHORING SHALL BE IN ACCORDANCE WITH ACI 347. WHERE CONCRETE MUST SUPPORT SUPERIMPOSED LOADS PRIOR TO ATTAINING THE SPECIFIED DESIGN STRENGTH, RESHORE CONCRETE IN ACCORDANCE WITH ACI 347. RESHORING SHALL NOT BE REMOVED SOONER THAN 28 DAYS FROM THE DATE OF POUR OR UNTIL CONCRETE HAS ATTAINED THE SPECIFIED DESIGN STRENGTH.

THE CONTRACTOR SHALL SUBMIT FOR PRIOR APPROVAL THE END OF POUR LOCATIONS FOR CONCRETE GRADE BEAMS, CONCRETE COLUMNS, AND CONCRETE BEAMS.

THE CONTRACTOR SHALL BE RESPONSIBLE FOR ADHERING TO ALL APPLICABLE STANDARDS SET FORTH BY OSHA, INCLUDING THE FOLLOWING REQUIREMENTS FROM STANDARDS - 29 CFR, SECTION 1926,
SUBPART R:

A. THE STEEL ERECTION CONTRACTOR SHALL NOT ERECT STEEL UNLESS THEY HAVE RECEIVED WRITTEN NOTIFICATION FROM THE CONTRACTOR THAT THE CONCRETE IN THE FOOTINGS, PIERS AND WALLS OR THE MORTAR IN THE MASONRY PIERS AND WALLS HAS ATTAINED, ON THE BASIS OF AN APPROPRIATE ASTM STANDARD TEST METHOD OF FIELD-CURED SAMPLES, EITHER 75 PERCENT OF THE INTENDED MINIMUM COMPRESSIVE DESIGN STRENGTH OR SUFFICIENT STRENGTH TO SUPPORT THE LOADS IMPOSED DURING STEEL ERECTION. PROVIDE STRUCTURAL ENGINEER A COPY OF WRITTEN NOTIFICATION WHEN IT IS PROVIDED TO THE STEEL ERECTOR.

B. ANCHOR RODS (ANCHOR BOLTS) SHALL NOT BE REPAIRED, REPLACED OR FIELD-MODIFIED WITHOUT THE APPROVAL OF THE PROJECT STRUCTURAL ENGINEER OF RECORD.

PRIOR TO ERECTION OF COLUMNS, THE CONTRACTOR SHALL PROVIDE WRITTEN NOTIFICATION TO THE STEEL ERECTOR IF THERE HAS BEEN ANY REPAIR, REPLACEMENT OR MODIFICATION OF THE ANCHOR RODS (ANCHOR BOLTS).

PROVIDE STRUCTURAL ENGINEER A COPY OF WRITTEN NOTIFICATION WHEN IT IS PROVIDED TO THE STEEL ERECTOR.

PROTECTION: PROPER PRECAUTIONS SHALL BE TAKEN AT ALL TIMES TO PROTECT VEHICULAR AND PEDESTRIAN TRAFFIC FROM ANY DAMAGE OR INJURY WHICH MAY BE CAUSED, EITHER DIRECTLY OR INDIRECTLY, BY THE WORK INCLUDED ON THESE DRAWINGS. SUCH PRECAUTIONS SHALL INCLUDE THE ERECTION AND MAINTENANCE OF FENCES, BARRICADES, RAILINGS, GUARDS, SIGNS, COVERINGS, LIGHTS, AND OTHER PRECAUTIONS AS MAY BE REQUIRED. IF AT ANY TIME, IN THE OPINION OF THE OWNER OR THE OWNER'S REPRESENTATIVE, PROPER PRECAUTIONS ARE NOT BEING TAKEN TO SECURE THIS PROTECTION, THE CONTRACTOR SHALL AT NO ADDITIONAL COST TO THE OWNER, INSTALL AND MAINTAIN SUCH ADDITIONAL PROTECTION AS MAY BE DIRECTED BY THE OWNER.

POLLUTION CONTROLS: USE WATER SPRINKLING, TEMPORARY ENCLOSURES, AND OTHER SUITABLE METHODS TO LIMIT DUST AND DIRT RISING AND SCATTERING IN THE AIR TO LOWEST PRACTICAL LEVEL. COMPLY WITH GOVERNING REGULATIONS PERTAINING TO ENVIRONMENTAL PROTECTION.

TYPICAL DETAIL SHEETS:

THE S7. SERIES SHEETS IN THESE DRAWINGS CONTAIN TYPICAL STRUCTURAL DETAILS FOR VARIOUS BUILDING MATERIALS. SOME OF THESE DETAILS MAY NOT BE PART OF THIS PROJECT.

DRAWINGS:

DO NOT SCALE DRAWINGS.

WHERE DISCREPANCIES OCCUR BETWEEN PLANS, DETAILS, GENERAL NOTES, AND SPECIFICATIONS, THE MORE STRINGENT REQUIREMENTS SHALL GOVERN. DETAILS ON DRAWINGS TAKE PRECEDENCE OVER GENERAL NOTES AND TYPICAL DETAILS. DETAILS NOTED "TYPICAL" APPLY TO ALL SIMILAR CONDITIONS. WHERE NO SPECIFIC DETAILS ARE SHOWN, CONSTRUCTION SHALL CONFORM TO SIMILAR WORK ELSEWHERE ON THE PROJECT.

CAST-IN-PLACE CONCRETE:

ALL CONCRETE SHALL CONFORM TO THE SPECIFICATIONS FOR STRUCTURAL CONCRETE, ACI 318-14.

ALL EXPOSED EDGES OF CONCRETE SHALL HAVE A 3/4" CHAMFER UNLESS NOTED OTHERWISE.

100% CONSTRUCTION DOCUMENTS

Chavez-Grieves
consulting engineers, inc.
4700 LINCOLN RD NE STE 102 • ALBUQUERQUE, NM 87109
PHONE (505) 344-4080 • FAX (505) 343-8759

autotroph
architecture.planning.sustainable design consulting

No.	Description	Date

Hwy 14 Senior Center

GENERAL FOUNDATION & STRUCTURAL NOTES

Project Number	1606
Date	10/20/2017
Drawn By	ADM/PS
Checked By	GHB

S0.2

GENERAL STRUCTURAL NOTES

NORMALWEIGHT CONCRETE:

A. F'C = 4500 PSI @ 28 DAYS - ALL EXPOSED EXTERIOR CONCRETE FLAT WORK AND RETAINING WALLS (I.E., SLABS, EQUIPMENT PADS, WALLS, ETC.).
EXTERIOR CONCRETE SHALL MEET EXPOSURE CATEGORY AND CLASS F1 ACCORDING TO ACI 318 TABLE 4.2.1.
B. F'C = 3000 PSI @ 28 DAYS - ALL INTERIOR CONCRETE (I.E. FOOTINGS, PEDESTALS, TIE BEAMS, GRADE BEAMS, RETAINING WALLS, ETC.).
C. F'C = 3000 PSI @ 28 DAYS - ALL INTERIOR SLABS ON GRADE, UNLESS NOTED OTHERWISE.

CONCRETE MIX DESIGNS (INCLUDING AIR CONTENT, WATER TO CEMENT RATIOS, AND OTHER CRITERIA) SHALL CONFORM TO THE REQUIREMENTS SET FORTH IN ACI 318 TABLE 4.3.1, BASED ON THE EXPOSURE CATEGORIES AND CLASSES DEFINED IN ACI 318 TABLE 4.2.1. USE AIR ENTRAINING ADMIXTURE IN ALL EXTERIOR CONCRETE. AIR CONTENT IN FIRE RATED SLABS SHALL ALSO COMPLY WITH THE REQUIREMENTS IN THE SPECIFIED UL LISTING.

COLD WEATHER CONCRETING: PROTECT CONCRETE WORK FROM PHYSICAL DAMAGE OR REDUCED STRENGTH CAUSED BY FROST, FREEZING OR LOW TEMPERATURES. COMPLY WITH ACI 306.1.

HOT WEATHER CONCRETING: WHEN HOT WEATHER CONDITIONS EXIST THAT WOULD IMPAIR THE QUALITY AND STRENGTH OF THE CONCRETE, REDUCE DELIVERY TIME OF READY MIX CONCRETE, LOWER THE TEMPERATURE OF MATERIALS, OR ADD RETARDER TO ENSURE THAT THE CONCRETE IS PLASTIC. RETEMPERING WITH WATER IS NOT ALLOWED. COMPLY WITH ACI 305R.

THE CONTRACTOR SHALL NOT CAST CONCRETE STEM WALLS OR RETAINING WALLS AGAINST EXCAVATED VERTICAL SOIL SURFACES.

THE CONTRACTOR IS ALLOWED TO CAST FOUNDATIONS AGAINST EXCAVATED SOIL SURFACES, PROVIDED THE FOLLOWING IS ADHERED TO:

A. THE SIDE SLOPES OF THE EXCAVATION SHALL BE ABLE TO MAINTAIN VERTICAL SLOPE WITHOUT SOIL SLOUGHAGE.
B. THE BOTTOM WIDTH OF THE EXCAVATION SHALL BE ONE INCH WIDER MINIMUM ON EACH SIDE THAN THE SPECIFIED FOOTING WIDTH.
C. THE SIDE WALLS OF THE EXCAVATION SHALL BE BATTERED A MINIMUM OF ONE INCH HORIZONTAL TO TWELVE INCHES VERTICAL.
D. IF SANDY OR LOOSE MATERIALS ARE ENCOUNTERED, THE FOOTING MUST BE FORMED.
E. THE CONTRACTOR SHALL BE RESPONSIBLE FOR REMOVAL OF ANY SOIL SLOUGHAGE FROM THE WET CONCRETE DURING THE CASTING OPERATION.
F. THE CONTRACTOR AGREES TO REMOVE AND RECAST ANY FOOTING WHERE THE ABOVE CONDITIONS ARE NOT MET.

ALL CONCRETE EXPOSED TO GROUND SHALL BE MANUFACTURED WITH PORTLAND CEMENT TYPE II OR TYPE V.

SEE SHEET S7.1 FOR TYPICAL CONCRETE DETAILS.

REINFORCING STEEL:

ALL REINFORCING STEEL SHALL BE FABRICATED AND PLACED IN ACCORDANCE WITH THE BUILDING CODE REQUIREMENTS FOR STRUCTURAL CONCRETE (ACI 318-08), AND DETAILS AND DETAILING OF CONCRETE REINFORCEMENT (ACI 315-99).

ALL REINFORCING STEEL SHALL CONFORM TO ASTM A615 GRADE 60; EXCEPT STIRRUPS, TIES AND INDICATED FIELD-BENT BARS, WHICH SHALL CONFORM TO ASTM A615 GRADE 40.

ALL WELDED WIRE FABRIC SHALL BE DEFORMED AND SHALL CONFORM TO ASTM A479. PROVIDE IN FLAT SHEETS ONLY.

TENSION AND COMPRESSION LAPS IN REINFORCING SHALL CONFORM TO THE LAP SPLICE SCHEDULE ON SHEET S6.1 AND BE IN ACCORDANCE WITH ACI 318, CHAPTER 12, UNLESS NOTED OTHERWISE.

ALL HORIZONTAL REINFORCING IN FOOTINGS, WALLS AND BEAMS SHALL BE CONTINUOUS AROUND CORNERS OR HAVE BENT (CORNER) BARS OF THE SAME SIZE AND SPACING AS THE HORIZONTAL BARS AND LAP 30 BAR DIAMETERS (24" MINIMUM).

CONCRETE COVER FOR REINFORCING SHALL BE AS FOLLOWS UNLESS OTHERWISE NOTED:

A. CONCRETE CAST AGAINST AND PERMANENTLY EXPOSED TO EARTH: 3"
B. CONCRETE CAST AGAINST FORMS BUT EXPOSED TO EARTH OR WEATHER:
C. BARS LARGER THAN NO. 5: 2"
D. BARS NO. 5 OR SMALLER: 1 1/2"
E. SLAB ON GRADE: 1 1/2" FROM TOP OF SLAB

FORM TIES SHALL BE EITHER OF THE THREADED OR SNAP-OFF TYPE SO THAT NO METAL WILL BE LEFT WITHIN 1 INCH OF THE SURFACE OF THE WALL. FOLLOWING REMOVAL OF FORM TIES, RECESSES ARE TO BE CAREFULLY FILLED AND POINTED WITH MORTAR.

REINFORCING SHALL NOT BE TACK WELDED OR WELDED IN ANY MANNER UNLESS SPECIFICALLY DETAILED ON THE STRUCTURAL PLANS.

BAR SUPPORTS AND SPACERS FOR REINFORCING SHALL BE PROVIDED IN ACCORDANCE WITH ACI 315-99. REINFORCING SHALL BE SECURELY TIED TO SUPPORTS.

CHAIRS WITH 22 GAGE SAND PLATES OR PRECAST BLOCKS SHALL BE PROVIDED FOR ALL REINFORCING OF CONCRETE IN CONTACT WITH GRADE.

POST INSTALLED ANCHORS:

THE STRUCTURAL DESIGN IS BASED ON THE POST INSTALLED ANCHORING SYSTEMS NOTED BELOW. SINCE ANCHOR CAPACITIES VARY BY MANUFACTURER, THE CONTRACTOR SHALL USE ONLY THE SYSTEMS NOTED BELOW UNLESS AN ALTERNATE IS APPROVED BY THE ENGINEER OF RECORD. ALTERNATE ANCHORING SYSTEMS MAY REQUIRE RE-DESIGN TO VERIFY ANCHOR QUANTITIES, SPACING, AND EMBED DEPTHS. THE CONTRACTOR SHALL BE RESPONSIBLE FOR ANY ADDITIONAL CONSTRUCTION AND RE-DESIGN COSTS ASSOCIATED WITH THE ALTERNATE ANCHORING SYSTEM.

ALL ADHESIVE (EPOXY) FOR POST INSTALLED ANCHORS AND/OR REBAR INTO CONCRETE SHALL BE SIMPSON SET-XP EPOXY-TIE ANCHORING SYSTEM. INSTALLATION SHALL BE PER MANUFACTURER'S RECOMMENDATIONS.

GENERAL STRUCTURAL NOTES

ALL POST INSTALLED MECHANICAL ANCHORS INTO CONCRETE SHALL BE SIMPSON STRONG BOLT WEDGE ANCHOR. INSTALLATION SHALL BE PER MANUFACTURER'S RECOMMENDATIONS.

ALL POST INSTALLED MECHANICAL ANCHORS INTO CONCRETE SHALL BE SIMPSON TITEN HD SCREW ANCHOR. INSTALLATION SHALL BE PER MANUFACTURER'S RECOMMENDATIONS.

SUBMIT ALL PROPOSED ANCHORING SYSTEMS INCLUDING ICC-ES REPORTS TO STRUCTURAL ENGINEER FOR REVIEW PRIOR TO INSTALLATION. THE ICC–ES FORMS SHALL MEET THE REQUIREMENTS OF THE IBC REFERENCED IN THESE NOTES.

STRUCTURAL AND MISCELLANEOUS STEEL:

ALL STRUCTURAL STEEL SHALL BE DETAILED AND FABRICATED IN ACCORDANCE WITH THE AISC "SPECIFICATION FOR STRUCTURAL STEEL BUILDINGS".

ALL MISCELLANEOUS STEEL MEMBERS, SUCH AS CHANNELS, ANGLES, FLAT BARS, AND PLATES SHALL CONFORM TO ASTM A36 UNLESS NOTED OTHERWISE.

ALL RECTANGULAR AND SQUARE STRUCTURAL TUBING SHALL CONFORM TO ASTM A500, GRADE C, FY = 50 KSI.

BOLTS SHALL CONFORM TO ASTM A325N TENSION CONTROL BOLTS UNLESS NOTED OTHERWISE, WITH SIZES AS SHOWN ON THE DRAWINGS. WHERE CLEARANCE WITHIN A CONNECTION DOES NOT PERMIT THE USE OF TENSION CONTROL BOLTS, STANDARD A325N BOLTS SHALL BE USED AND INSPECTED IN ACCORDANCE WITH THE AISC "SPECIFICATION FOR STRUCTURAL JOINTS USING ASTM A325 OR A490 BOLTS".

ALL BOLTS SHALL BE INSTALLED IN A SNUG TIGHT CONDITION EXCEPT AT MOMENT CONNECTIONS, BRACED FRAME CONNECTIONS, AND AT CONNECTIONS DETAILED WITH A325SC BOLTS. AT THESE LOCATIONS, THE BOLTS SHALL BE TIGHTENED SO AS TO SHEAR THE SPLINE OFF THE BOLT.

ANCHOR BOLTS EMBEDDED IN CONCRETE SHALL BE ASTM F1554 GRADE 36 THREADED RODS WITH DOUBLE NUTS. PROVIDE FLAT WASHERS BETWEEN NUTS AND BASEPLATE SURFACES. ANCHOR BOLT LENGTHS SHOWN FOR ATTACHMENT TO CONCRETE AND/OR MASONRY ARE REQUIRED EMBEDMENT LENGTHS. THE CONTRACTOR SHALL PROVIDE ANCHOR BOLTS WITH ADDITIONAL BOLT LENGTH TO FACILITATE THE REQUIRED CONNECTION.

ANCHOR BOLT FLAT WASHERS SHALL BE PROVIDED IN ACCORDANCE WITH TABLE 14-2 OF AISC 360, AISC MANUAL OF STEEL CONSTRUCTION LATEST EDITION.

ALL WELDING SHALL BE DONE IN ACCORDANCE WITH THE LATEST STANDARDS OF THE AWS STRUCTURAL WELDING CODE.

ALL BOLT HOLES THAT ARE REQUIRED TO BE FIELD DRILLED SHALL BE DRILLED WITH A MAG DRILL. FLAME CUTTING OF HOLES OR ENLARGING OF MISALIGNED HOLES WILL NOT BE ALLOWED.

HEADED CONCRETE ANCHORS AND SHEAR CONNECTORS SHALL BE MADE FROM STEEL CONFORMING TO ASTM A108 AND MEET THE MECHANICAL PROPERTIES OF TYPE B, AS REQUIRED BY CHAPTER 7 OF AWS D1.1 "STRUCTURAL WELDING CODE-STEEL", LATEST EDITION. STRUCTURAL STEEL TO RECEIVE SHEAR CONNECTORS SHALL BE FREE OF PAINT. WELDING PREQUALIFICATION REQUIRED.

SEE SHEET S5.1 FOR TYPICAL STEEL DETAILS.

COLD-FORMED METAL FRAMING (43 MILS OR HEAVIER):

ALL COLD-FORMED METAL FRAMING SHALL CONFORM TO THE LATEST EDITION OF AISI STANDARD S100 "NORTH AMERICAN SPECIFICATION FOR THE DESIGN OF COLD-FORMED STEEL STRUCTURAL MEMBERS".

WALLS SHALL BE PROVIDED WITH MANUFACTURER'S STANDARD BRIDGING: (EITHER WELDED 2 1/2" x 43 MILS STUD OR CLIPPED COLD-ROLLED CHANNEL 1 1/2" x 54 MILS). PROVIDE BRIDGING AT 4'-0" ON CENTER MAXIMUM FOR LOAD BEARING WALLS AND EXTERIOR WALLS.

PROVIDE ALL MISCELLANEOUS ACCESSORIES AND FOLLOW ERECTION PROCEDURES AS PER MANUFACTURER'S SPECIFICATIONS AND RECOMMENDATIONS UNLESS NOTED OTHERWISE.

COLD-FORMED METAL FRAMING SHALL MEET THE MINIMUM PROPERTIES AS SHOWN IN THE STEEL STUD MANUFACTURERS ASSOCIATION (SSMA) SPECIFICATIONS.

ALL TRACK SHALL BE ANCHORED TO CONCRETE WITH 1/2" DIAMETER x 3 1/2" EMBED EXPANSION ANCHORS SPACED AT 4'-0" ON CENTER UNLESS SHOWN OTHERWISE ON PLANS.

SECURE STUDS TO TOP AND BOTTOM TRACKS BY WELDING AT BOTH INSIDE AND OUTSIDE FLANGES OR WITH A MINIMUM OF 1-#10 SELF-DRILLING SCREW PER LOCATION UNLESS NOTED OTHERWISE.

ALL COMPONENTS OF BUILT-UP STUD SECTIONS, INCLUDING COLUMNS, HEADERS, ETC. SHALL BE WELDED TOGETHER UTILIZING 1/8" FILLET WELDS, 1" LONG AT 12" OC, ALONG THE FULL LENGTH OF EACH FLANGE TO FLANGE CONNECTION.

FASTEN WELD CLIPS TO STUDS IN ACCORDANCE WITH MANUFACTURER'S RECOMMENDATIONS AND LOAD DATA TO PROVIDE AN ALLOWABLE LOAD OF 700# MINIMUM IN THE HORIZONTAL DIRECTION AND 700# MINIMUM IN THE VERTICAL DIRECTION. SEE SHEET S7.2 FOR TYPICAL WELD CLIP DETAIL.

FASTEN SLIDE CLIPS TO STUDS IN ACCORDANCE WITH MANUFACTURER'S RECOMMENDATIONS AND LOAD DATA TO PROVIDE AN ALLOWABLE LOAD OF 700# MINIMUM IN THE HORIZONTAL DIRECTION. SEE SHEET S7.2 FOR TYPICAL SLIDE CLIP DETAIL.

SEE SHEET S7.2 FOR TYPICAL COLD-FORMED DETAILS.

GENERAL STRUCTURAL NOTES

MASONRY:

ALL MASONRY UNITS SHALL COMPLY WITH ASTM C 90 WITH A COMPRESSIVE STRENGTH OF 2000 PSI (NET AREA).

F'M = 1900 PSI

MORTAR SHALL BE TYPE S.

GROUT - F'C = 2000 PSI, MINIMUM.

CELLS CONTAINING REBAR SHALL BE GROUTED SOLID FROM THE BOTTOM TO THE TOP OF THE WALL IN ACCORDANCE WITH THE INTERNATIONAL BUILDING CODE.

ALL CELLS BELOW GRADE SHALL BE GROUTED SOLID UP TO GRADE.

CELLS CONTAINING EXPANSION ANCHORS SHALL BE GROUTED SOLID.

ALL VERTICAL REBAR SHALL BE IN PLACE AND SECURED WITH REBAR POSITIONERS PRIOR TO GROUTING.

COVER FOR REINFORCING SHALL BE AS FOLLOWS UNLESS OTHERWISE NOTED:

A. MASONRY FACE NOT EXPOSED TO EARTH OR WEATHER: 1 1/2"
B. MASONRY FACE EXPOSED TO EARTH OR WEATHER:
   1. BARS LARGER THAN NO. 5: 2"
   2. BARS NO. 5 OR SMALLER: 1 1/2"

UNLESS OTHERWISE NOTED MASONRY CELLS SHALL BE GROUTED IN ACCORDANCE WITH THE INTERNATIONAL BUILDING CODE (MAXIMUM 5 FOOT GROUT LIFTS).

LAP REBAR 48 BAR DIAMETERS (12" MINIMUM) UNLESS NOTED OTHERWISE.

ALL HORIZONTAL REINFORCING IN BOND BEAMS SHALL BE CONTINUOUS AROUND CORNERS OR HAVE BENT (CORNER) BARS OF THE SAME SIZE AND A LAP AS NOTED ABOVE. VERTICAL STEEL SHALL CONTINUE THROUGH BOND BEAMS.

PROVIDE STANDARD LADDER TYPE JOINT REINFORCING AT 16" ON CENTER (ALTERNATE COURSES) UNLESS NOTED OTHERWISE. USE PREFABRICATED CORNERS AND TEES AT ALL WALL CORNERS AND INTERSECTIONS RESPECTIVELY.

SEE ARCHITECTURAL DRAWINGS AND SPECIFICATIONS FOR INFORMATION REGARDING MASONRY COLORS, FINISHES, BOND, ETC. AT ALL EXPOSED MASONRY WALLS.

ALL MASONRY WALL CONFIGURATIONS INCLUDING WALL OPENINGS SHALL BE COORDINATED WITH CIVIL, MECHANICAL, PLUMBING, ELECTRICAL AND DRAWINGS FROM ALL OTHER DISCIPLINES.

EXPOSED MASONRY SITE WALLS AND RETAINING WALLS GREATER THAN 16 FEET IN LENGTH SHALL HAVE MASONRY CONTROL JOINTS INSTALLED AT THE FOLLOWING MINIMUM SPACING:

12'-0" ON CENTER FOR WALLS 6'-0" MAXIMUM HEIGHT
18'-0" ON CENTER FOR WALLS 10'-0" MAXIMUM HEIGHT
20'-0" ON CENTER FOR WALLS GREATER THAN 10'-0" IN HEIGHT

SEE SHEET S7.3 FOR TYPICAL MASONRY DETAILS.

WOOD FRAMING:

ALL SAWN LUMBER (2"-4" THICK, 2" & WIDER) EXCEPT STUDS SHALL BE DOUGLAS FIR, NO. 2 OR BETTER, WITH THE FOLLOWING MINIMUM ALLOWABLE STRESSES:

MAXIMUM FIBER STRESS IN BENDING	FB= 900 PSI
TENSION PARALLEL TO GRAIN	FT= 575 PSI
COMPRESSION PARALLEL TO GRAIN	FC= 1350 PSI
COMPRESSION PERPENDICULAR TO GRAIN	FC= 625 PSI
HORIZONTAL SHEAR	FV= 180 PSI
MODULUS OF ELASTICITY	E= 1,600,000 PSI

ALL SAWN LUMBER (5"x5" OR LARGER BEAMS AND STRINGERS) SHALL BE DOUGLAS FIR, NO. 1 OR BETTER, WITH THE FOLLOWING MINIMUM ALLOWABLE STRESSES:

MAXIMUM FIBER STRESS IN BENDING:	FB= 1350 PSI
TENSION PARALLEL TO GRAIN:	FT= 675 PSI
COMPRESSION PERPENDICULAR TO GRAIN	FC= 625 PSI
COMPRESSION PARALLEL TO GRAIN	FC=925 PSI
HORIZONTAL SHEAR	FV= 170 PSI
MODULUS OF ELASTICITY:	E= 1,600,000 PSI

ALL SAWN LUMBER (5"x5" OR LARGER POSTS AND TIMBERS) SHALL BE DOUGLAS FIR, NO. 1 OR BETTER, WITH THE FOLLOWING MINIMUM ALLOWABLE STRESSES:

MAXIMUM FIBER STRESS IN BENDING	FB= 1200 PSI
TENSION PARALLEL TO GRAIN	FT= 825 PSI
COMPRESSION PARALLEL TO GRAIN	FC= 1000 PSI
COMPRESSION PERPENDICULAR TO GRAIN	FC= 625 PSI
HORIZONTAL SHEAR	FV= 170 PSI
MODULUS OF ELASTICITY	E= 1,600,000 PSI

STUDS (2"-4" THICK, 2" & WIDER) SHALL BE DOUGLAS FIR, NO. 2 OR BETTER, WITH THE FOLLOWING MINIMUM ALLOWABLE STRESSES:

MAXIMUM FIBER STRESS IN BENDING	FB= 900 PSI
TENSION PARALLEL TO GRAIN	FT= 575 PSI
COMPRESSION PARALLEL TO GRAIN	FC= 1350 PSI
COMPRESSION PERPENDICULAR TO GRAIN	FC= 625 PSI
HORIZONTAL SHEAR	FV= 180 PSI
MODULUS OF ELASTICITY	E= 1,600,000 PSI

GENERAL STRUCTURAL NOTES

PRE-ENGINEERED/PREFABRICATED WOOD TRUSSES:

TRUSSES SHALL BE FABRICATED WITH WOOD CHORDS AND WOOD WEBS IN ACCORDANCE WITH DESIGNS PREPARED BY A PROFESSIONAL ENGINEER REGISTERED IN THE STATE THAT THE PROJECT IS LOCATED.

SHOP DRAWINGS AND STAMPED CALCULATIONS SHALL BE SUBMITTED FOR APPROVAL BY THE ENGINEER OF RECORD.

DESIGN STANDARDS SHALL CONFORM WITH THE APPLICABLE PROVISION OF THE LATEST EDITION OF THE NATIONAL DESIGN SPECIFICATION FOR WOOD CONSTRUCTION, PUBLISHED BY THE NATIONAL FOREST PRODUCTS ASSOCIATION, AND THE LATEST EDITION OF THE DESIGN SPECIFICATION FOR METAL PLATE CONNECTED WOOD TRUSSES, PUBLISHED BY THE TRUSS PLATE INSTITUTE.

ALL TRUSSES SHALL BE SECURELY BRACED BOTH DURING ERECTION AND AFTER PERMANENT INSTALLATION IN ACCORDANCE WITH THE LATEST EDITION OF BRACING WOOD TRUSSES: COMMENTARY AND RECOMMENDATIONS AS PUBLISHED BY THE TRUSS PLATE INSTITUTE.

STRUCTURAL GLUED-LAMINATED TIMBER:

GLUED-LAMINATED WOOD BEAMS AND GIRDERS SHALL BE OF DOUGLAS FIR-LARCH WITH ALLOWABLE STRESSES CORRESPONDING TO 24F-V8 AS LISTED IN THE LATEST EDITION OF THE NATIONAL DESIGN SPECIFICATION FOR WOOD CONSTRUCTION.

ADHESIVES SHALL MEET THE REQUIREMENTS FOR CONDITIONS OF SERVICE.

A COAT OF END SEALER SHALL BE APPLIED TO THE ENDS OF ALL MEMBERS AS SOON AS PRACTICABLE AFTER END TRIMMING, UNLESS OTHERWISE NOTED.

ALL GLUED-LAMINATED BEAMS TO BE ARCHITECTURAL GRADE OR BETTER.

NOTCHING OF STRUCTURAL MEMBERS IN THE FIELD IS PROHIBITED UNLESS SPECIFICALLY SHOWN ON DRAWINGS.

ENGINEERED LUMBER

LAMINATED VENEER LUMBER (MICROLAM, GANG-LAM W):
ALL BEAMS SHALL HAVE THE FOLLOWING ALLOWABLE STRESSES:

FLEXURAL STRESS	FB= 2600 PSI
COMPRESSION PARALLEL TO GRAIN	FC= 2510 PSI
COMPRESSION PERPENDICULAR TO GRAIN, PARALLEL TO GLUE LINE	FC= 750 PSI
HORIZONTAL SHEAR PERPENDICULAR TO GLUE LINE	FV= 285 PSI
MODULUS OF ELASTICITY	E= 1,900,000 PSI

PARALLEL STRAND LUMBER (PARALLAM):
ALL BEAMS SHALL HAVE THE FOLLOWING ALLOWABLE STRESSES:

FLEXURAL STRESS	FB= 2900 PSI
COMPRESSION PARALLEL TO GRAIN	FC= 2900 PSI
COMPRESSION PERPENDICULAR TO GRAIN, PARALLEL TO WIDE FACE OF STRANDS	FC= 750 PSI
HORIZONTAL SHEAR PERPENDICULAR TO WIDE FACE OF STRANDS	FV= 290 PSI
MODULUS OF ELASTICITY	E= 2,000,000 PSI

ALL COLUMNS SHALL HAVE THE FOLLOWING ALLOWABLE STRESSES:

FLEXURAL STRESS	FB= 2400 PSI
COMPRESSION PARALLEL TO GRAIN	FC= 2500 PSI
MODULUS OF ELASTICITY	E= 1,800,000 PSI

LAMINATED STRAND LUMBER (TIMBERSTRAND):
ALL BEAMS SHALL HAVE THE FOLLOWING ALLOWABLE STRESSES:

FLEXURAL STRESS	FB= 2250 PSI
COMPRESSION PARALLEL TO GRAIN	FC= 1950 PSI
COMPRESSION PERPENDICULAR TO GRAIN, PARALLEL TO WIDE FACE OF STRANDS	FC= 650 PSI
HORIZONTAL SHEAR PERPENDICULAR TO WIDE FACE OF STRANDS	FV= 285 PSI
MODULUS OF ELASTICITY	E= 1,500,000 PSI

PREFABRICATED WOOD JOISTS (TJI, BCI):
THE JOISTS SHALL BE MANUFACTURED TO FIT THE DIMENSIONS AND CHECKED FOR THE EFFECTS OF CONCENTRATED LOADS INDICATED ON THE PLANS. THE DESIGN STRESS VALUE SHALL BE IN COMPLIANCE WITH THE NATIONAL DESIGN SPECIFICATION FOR WOOD CONSTRUCTION

100% CONSTRUCTION DOCUMENTS

Chavez-Grieves
consulting engineers, inc.
4700 LINCOLN RD NE STE 102 • ALBUQUERQUE, NM 87109
PHONE (505) 344-4080 • FAX (505) 343-8759

autotroph
architecture.planning.sustainable design consulting

No.	Description	Date

Hwy 14 Senior Center

GENERAL STRUCTURAL NOTES

Project Number	1606
Date	10/20/2017
Drawn By	ADM/PS
Checked By	Checker

S0.3

GENERAL STRUCTURAL NOTES

APA SPAN RATED SHEATHING:

SEE PLANS FOR GRADE, THICKNESS, AND LOCATIONS OF SHEATHING.

ROOF AND WALL SHEATHING SHALL BE CONTINUOUS OVER 2 SPANS MINIMUM. ENDS OF PANELS SHALL OCCUR DIRECTLY OVER SUPPORTS.

WOOD CONNECTIONS:

NAILING SHALL BE IN ACCORDANCE WITH THE NAILING SCHEDULE ON SHEET S6.1 UNLESS OTHERWISE NOTED. COMMON OR BOX NAILS MAY BE USED EXCEPT WHERE OTHERWISE NOTED.

JOIST HANGERS SHALL BE BY SIMPSON STRONG-TIE CO. OR EQUAL WITH CONNECTIONS INSTALLED ACCORDING TO MANUFACTURER'S RECOMMENDATIONS.

BOLTS AND LAG BOLTS (OR SCREWS) SHALL BE ASTM A307.

STEEL SIDE PLATES SHALL BE ASTM A36.

LAG BOLTS (OR SCREWS) SHALL BE INSTALLED IN PRE-DRILLED HOLES. THE SIZE OF THE PRE-DRILLED HOLES SHALL BE PER THE LATEST EDITION OF THE LATEST EDITION OF THE NATIONAL DESIGN SPECIFICATION FOR WOOD CONSTRUCTION.

HEAVY TIMBER TRUSS BOLT HOLES ARE TO BE A MAXIMUM 1/32" LARGER THAN THE BOLT DIAMETER. HOLES SHALL BE ACCURATELY ALIGNED IN MAIN MEMBERS AND SIDE PLATES. BOLTS SHALL NOT BE FORCIBLY DRIVEN.

SPECIAL INSPECTION:

THE OWNER SHALL PROVIDE FOR SERVICES OF A CERTIFIED INSPECTOR (APPROVED BY THE BUILDING OFFICIAL OR THE ENGINEER OF RECORD) IN ACCORDANCE WITH CHAPTER 17 OF THE INTERNATIONAL BUILDING CODE FOR THE SPECIAL INSPECTION ITEMS NOTED THIS SHEET.

DEFERRED SUBMITTALS:

THE DEFERRED SUBMITTALS LISTED BELOW ARE THOSE PORTIONS OF THE DESIGN THAT ARE NOT COMPLETED AT THE TIME OF APPLICATION AND ARE TO BE SUBMITTED TO THE BUILDING OFFICIAL AND APPROVED PRIOR TO THE INSTALLATION OF THOSE ITEMS. THE MANUFACTURER, CONSULTANT, OR CONTRACTOR, AS APPROPRIATE, SHALL PROVIDE SUBMITTALS TO THE ENGINEER OF RECORD FOR REVIEW FOR THE FOLLOWING ITEMS:

PRE-ENGINEERED/PREFABRICATED WOOD TRUSSES

STATEMENT OF STRUCTURAL SPECIAL INSPECTIONS

1. SPECIAL INSPECTIONS / TESTING - "SPECIAL STRUCTURAL INSPECTION" SHALL NOT RELIEVE THE OWNER OR THEIR AGENT FROM HAVING THE INSPECTIONS OF THE JURISDICTION BUILDING DEPARTMENT PER SECTION 110 OF THE IBC PERFORMED. BOTH THE JURISDICTION BUILDING DEPARTMENT INSPECTIONS AND "SPECIAL STRUCTURAL INSPECTION" SHALL BE PERFORMED.
2. THE GENERAL CONTRACTOR SHALL BE RESPONSIBLE FOR NOTIFYING THE JURISDICTION BUILDING OFFICIAL AND SPECIAL INSPECTOR WHEN WORK IS READY FOR INSPECTION.
3. REPORTING FOR SPECIAL INSPECTION - SPECIAL INSPECTION AND TESTING REPORTS SHALL BE COMPLETED AND DISTRIBUTED AT THE COMPLETION OF EACH TASK. IF A TASK IS TO TAKE LONGER THAN THREE (3) DAYS, PROVIDE REPORTS FOR EACH DAY. PROVIDE COPIES OF REPORTS TO CONTRACTOR, OWNER, ARCHITECT AND STRUCTURAL ENGINEER OF RECORD. SPECIAL INSPECTOR TO KEEP A NON-COMPLIANCE LIST DOCUMENTING ITEMS INSPECTED NOT MEETING APPROVED CONSTRUCTION DOCUMENTS AND WHEN / HOW RESOLVED.
4. SEE ARCHITECTURAL, MECHANICAL, ELECTRICAL, AND PLUMBING CONSTRUCTION DOCUMENTS FOR ADDITIONAL NON-STRUCTURAL SPECIAL INSPECTION ITEMS.
5. SPECIAL INSPECTION OF SHOP FABRICATED MEMBERS AND ASSEMBLIES SHALL BE IN ACCORDANCE WITH SECTION 1704.2, UNLESS FABRICATOR IS APPROVED TO PERFORM WORK WITHOUT SPECIAL INSPECTION.
6. IN ACCORDANCE WITH IBC CHAPTER 17, THE OWNER OR THE OWNER'S AGENT, OTHER THAN THE CONTRACTOR, SHALL EMPLOY ONE OR MORE APPROVED AGENCIES TO PROVIDE SPECIAL INSPECTIONS AND TESTS, DURING CONSTRUCTION FOR THE TYPES OF WORK LISTED BELOW THESE SPECIAL INSPECTIONS AND TESTS ARE IN ADDITION TO THE INSPECTIONS BY THE BUILDING OFFICIAL IDENTIFIED IN IBC SECTION 110
7. DEFINITIONS:
   * **SPECIAL INSPECTION:** INSPECTION AS HEREIN REQUIRED BY A QUALIFIED SPECIAL INSPECTOR COMPETENT WITH THE MATERIALS, INSTALLATION, FABRICATION, ERECTION OR PLACEMENT OF COMPONENTS AND CONNECTIONS REQUIRING SPECIAL EXPERTISE TO ENSURE COMPLIANCE WITH APPROVED CONSTRUCTION DOCUMENTS AND REFERENCED STANDARDS (SEE SECTION 1704).
   * **CONTINUOUS SPECIAL INSPECTION:** FULL-TIME OBSERVATION OF WORK REQUIRING SPECIAL INSPECTION BY AN APPROVED SPECIAL INSPECTOR WHO IS PRESENT IN THE AREA WHERE THE WORK IS BEING PERFORMED.
   * **PERIODIC SPECIAL INSPECTION:** THE PART-TIME OR INTERMITTENT OBSERVATION OF WORK REQUIRING SPECIAL INSPECTION BY AN APPROVED SPECIAL INSPECTOR WHO IS PRESENT IN THE AREA WHERE THE WORK HAS BEEN OR IS BEING PERFORMED AND AT THE COMPLETION OF THE WORK.

ITEM	DESCRIPTION OF REQUIREMENTS	REQUIRED (YES/NO)
SPECIAL INSPECTION OF STRUCTURAL STEEL	TO BE PERFORMED IN ACCORDANCE WITH CHAPTER N OF AISC360-10	YES
SPECIAL INSPECTION AND VERIFICATION OF STEEL CONSTRUCTION OTHER THAN STRUCTURAL STEEL	TO BE PERFORMED IN ACCORDANCE WITH IBC SECTION 1705.2.2	YES
SPECIAL INSPECTIONS AND VERIFICATIONS FOR CONCRETE CONSTRUCTION	TO BE PERFORMED IN ACCORDANCE WITH IBC SECTION 1705.3, 1705.2.3 AND 1705.2.4	NO
SPECIAL INSPECTIONS AND VERIFICATIONS FOR WOOD CONSTRUCTION	TO BE PERFORMED IN ACCORDANCE WITH IBC SECTION 1705.5	YES
SPECIAL INSPECTIONS AND VERIFICATIONS OF SOILS	TO BE PERFORMED IN ACCORDANCE WITH IBC SECTION 1705.6,THE GEOTECHNICAL REPORT LISTED IN THE GENERAL FOUNDATION NOTES, AND ANY OTHER REQUIREMENTS LISTED IN THE GENERAL FOUNDATION NOTES	YES
SPECIAL INSPECTIONS FOR WIND RESISTANCE (REQUIRED ONLY FOR Vult = 155MPH OR GREATER IN EXPOSURE CATEGORY B, OR Vult = 142MPH OR GREATER IN EXPOSURE CATEGORY C OR D)	TO BE PERFORMED IN ACCORDANCE WITH IBC SECTION 1705.5	NO
SPECIAL INSPECTIONS, AND TESTING, FOR SEISMIC RESISTANCE (REQUIRED FOR STRUCTURES ASSIGNED TO CATEGORIES C, D, E, OR F)	TO BE PERFORMED IN ACCORDANCE WITH ALL APPLICABLE PORTIONS OF IBC SECTIONS 1705.12 AND 1705.13	YES

100% CONSTRUCTION DOCUMENTS

Chavez-Grieves
consulting engineers, inc.
4700 LINCOLN RD NE STE 102 • ALBUQUERQUE, NM 87109
PHONE (505) 344-4080 • FAX (505) 343-8759

autotroph
architecture.planning.sustainable design consulting

No.	Description	Date

Hwy 14 Senior Center

GENERAL STRUCTURAL NOTES & SPECIAL INSPECTION

Project Number	1606
Date	10/20/2017
Drawn By	ADM/PS
Checked By	GHB

S0.4

SHEET KEYNOTE

1. FLOOR DRAIN, SLOPE SLAB TO DRAIN 1/4" PER FOOT. COORDINATE EXACT SIZE AND LOCATION WITH ARCHITECTURAL AND PLUMBING DRAWINGS.
2. 2 - #4 x 3'-0" CENTERED IN SLAB.
3. EXTENT OF SHEARWALL. SEE S2.2 FOR SHEARWALL ELEVATIONS AND SCHEDULES.

GENERAL SHEET NOTES

1. DIMENSIONS ARE TO THE FACE OF CONCRETE UNLESS NOTED OTHERWISE.
2. PROVIDE SLAB JOINTS AT 15'-0" ON CENTER MAXIMUM. THE AREA OF THE CONTROL JOINT SHALL NOT EXCEED A 2:1 RATIO. CONTROL JOINTS SHALL BE LOCATED AT COLUMN LINES WHERE THE LAYOUT PERMITS.SEE A5/S7.1 FOR TYPICAL SLAB JOINTS.
3. TOP OF FOOTING ELEVATION = 98'-0" UNLESS NOTED OTHERWISE.
4. SEE SHEET S6.1 FOR SCHEDULES.
5. SEE SHEET S7.1 FOR TYPICAL CONCRETE DETAILS.
6. SEE SHEET S7.2 FOR TYPICAL COLD-FORMED DETAILS.
7. SEE SHEET S7.3 FOR TYPICAL MASONRY DETAILS.
8. ALL EXTERIOR WALLS ARE SHEATHED WITH 1/2" APA RATED OSB SHEATHING. ATTACH TO SUPPORTS W/ #8 SELF-DRILLING SCREWS @ 12" ON CENTER, UNLESS NOTED OTHERWISE.
9. ALL STRUCTURAL STUD WALLS TO BE TYPE W4. UNLESS NOTED OTHERWISE.

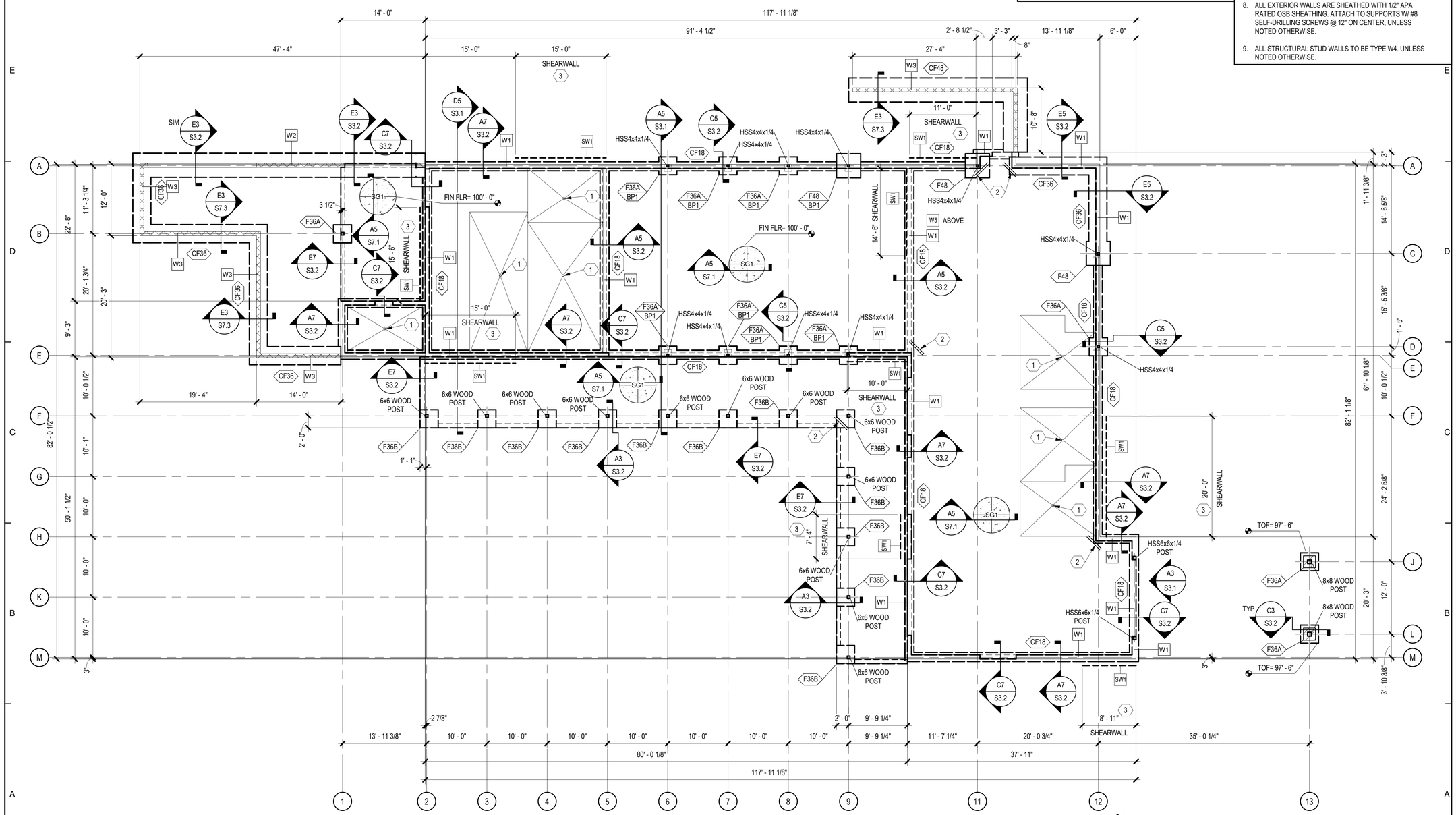

A1 FOUNDATION PLAN

SCALE: 1/8" = 1'-0"

100% CONSTRUCTION DOCUMENTS

Chavez-Grieves
consulting engineers, inc.
4700 LINCOLN RD NE STE 102 • ALBUQUERQUE, NM 87109
PHONE (505) 344-4080 • FAX (505) 343-8759

autotroph
architecture.planning.sustainable design consulting

No.	Description	Date

Hwy 14 Senior Center

FOUNDATION PLAN

Project Number	1606
Date	10/20/2017
Drawn By	ADM/PS
Checked By	GHB

S1.1

SHEET KEYNOTE

1. PRE-ENGINEERED WOOD ROOF TRUSSES @ 24" OC
2. EXPOSED GLU-LAM ROOF TRUSSES @ 10'-0" OC
3. 2x8 @ 24" OC
4. GIRDER TRUSS
5. ATTIC ACCESS WALKWAY - BUILT INTO TRUSSES
6. 2x10 @ 24" OC
7. 2x8 OUTRIGGERS @ 24" OC
8. STUD POST REQUIRED UNDER GIRDER TRUSS. SAME THICKNESS AS BOTTOM CHORD TRUSS.

GENERAL SHEET NOTES

1. DIMENSIONS ARE TO THE FACE OF STUD UNLESS NOTED OTHERWISE.
2. SEE SHEET S6.1 FOR SCHEDULES.
3. SEE SHEET S7.2 FOR TYPICAL COLD-FORMED DETAILS.
4. SEE ARCHITECTURAL DRAWINGS FOR TRUSS BEARING ELEVATIONS.
5. ALL EXTERIOR WALLS ARE SHEATHED WITH 1/2" APA RATED OSB SHEATHING. ATTACH TO SUPPORTS W/ #8 SELF-DRILLING SCREWS @ 12" ON CENTER, UNLESS NOTED OTHERWISE.
6. ALL STRUCTURAL WALLS TO BE TYPE W4. UNLESS NOTED OTHERWISE.

- INDICATES FUTURE PHOTOVOLTAIC LOAD. SEE GENERAL STRUCTURAL NOTES, SHEET S0.3.

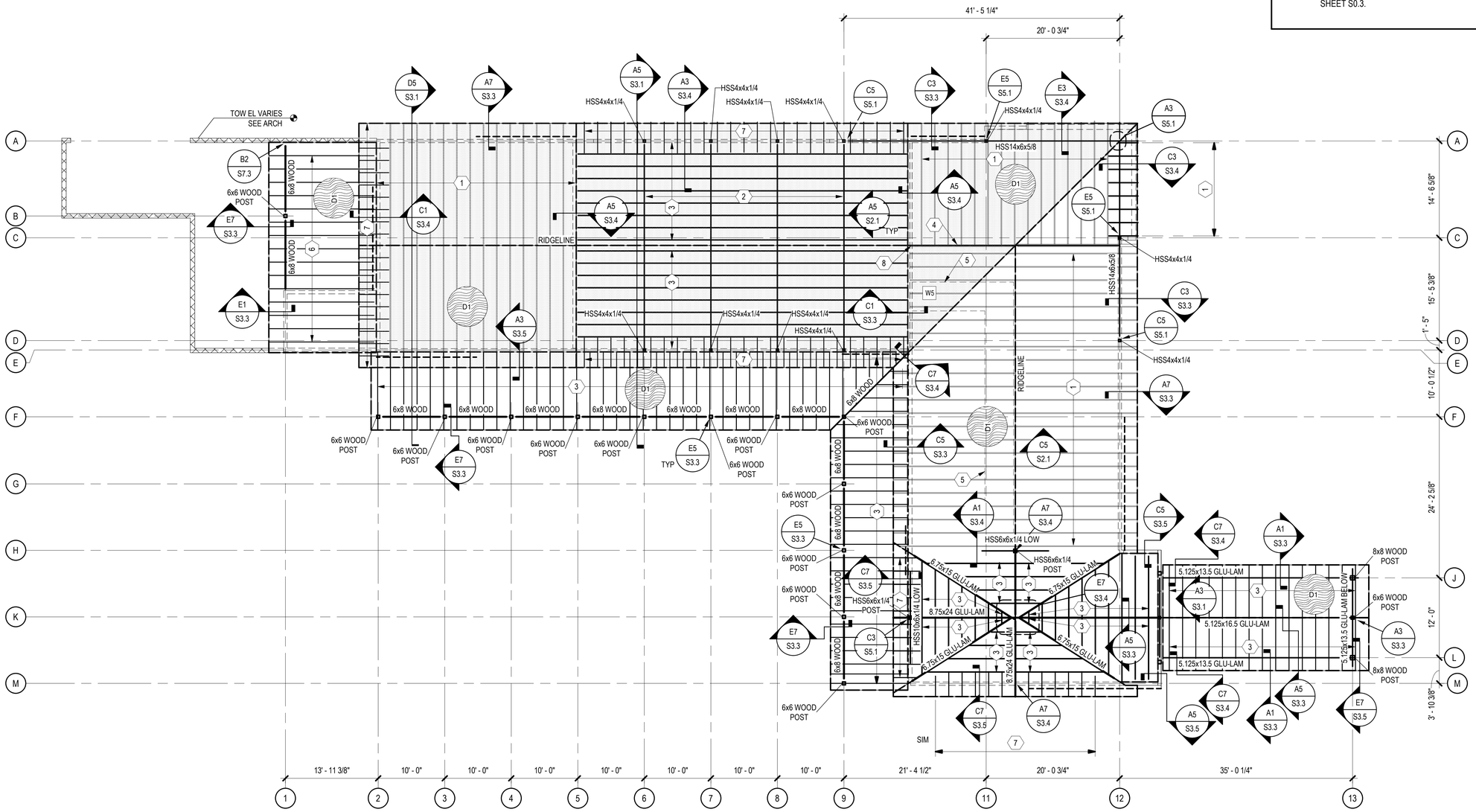

A1 ROOF FRAMING PLAN

SCALE: 1/8" = 1'-0"

100% CONSTRUCTION DOCUMENTS

Chavez-Grieves
consulting engineers, inc.
4700 LINCOLN RD NE STE 102 • ALBUQUERQUE, NM 87109
PHONE (505) 344-4080 • FAX (505) 343-8759

autotroph
architecture.planning.sustainable design consulting

No.	Description	Date

Hwy 14 Senior Center

ROOF FRAMING PLAN

Project Number	1606
Date	10/20/2017
Drawn By	ADM/PS
Checked By	GHB

S1.3

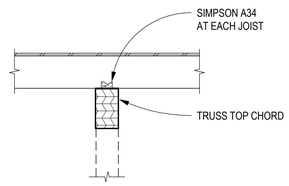

E3 TRUSS CONNECTION DETAIL
SCALE: 3/4" = 1'-0"

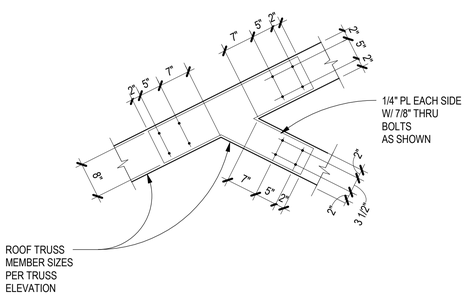

C1 TRUSS CONNECTION DETAIL
SCALE: 3/4" = 1'-0"

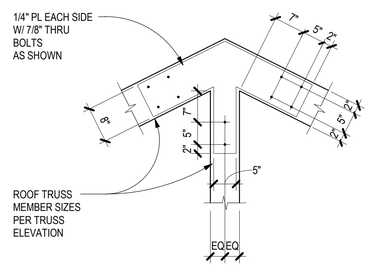

C3 TRUSS CONNECTION DETAIL
SCALE: 3/4" = 1'-0"

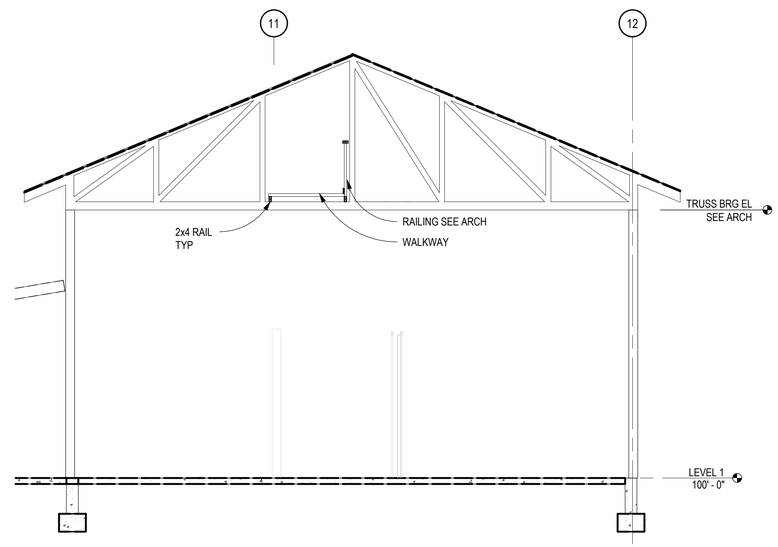

C5 TRUSS ELEVATION AND WALKWAY
SCALE: 1/4" = 1'-0"

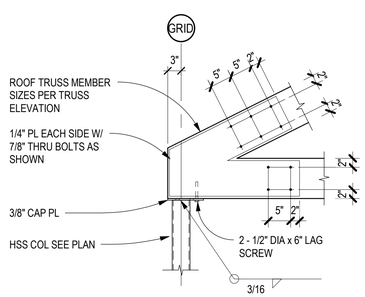

A1 TRUSS CONNECTION DETAIL
SCALE: 3/4" = 1'-0"

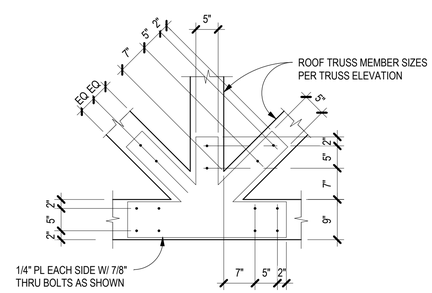

A3 TRUSS CONNECTION DETAIL
SCALE: 3/4" = 1'-0"

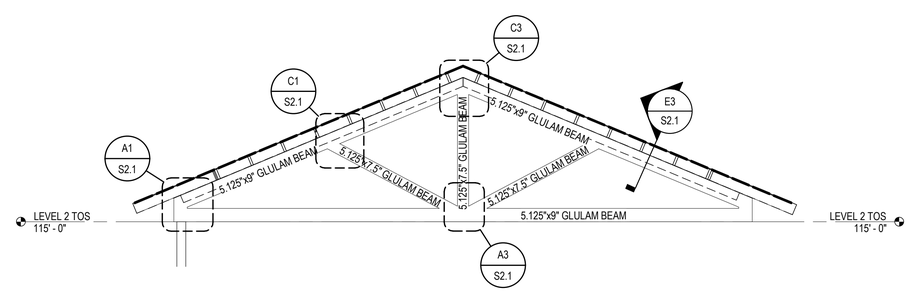

A5 TRUSS ELEVATION
SCALE: 1/4" = 1'-0"

100% CONSTRUCTION DOCUMENTS

Chavez-Grieves
consulting engineers, inc.
4700 LINCOLN RD NE STE 102 • ALBUQUERQUE, NM 87109
PHONE (505) 344-4080 • FAX (505) 343-8759

autotroph
architecture.planning.sustainable design consulting

No.	Description	Date

Hwy 14 Senior Center

TRUSS ELEVATIONS

Project Number	1606
Date	10/20/2017
Drawn By	ADM/PS
Checked By	GHB

S2.1

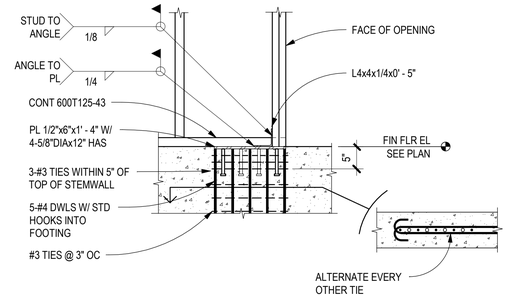

E5 SHEAR WALL TIE DOWN DETAIL

SCALE: 3/4" = 1'-0"

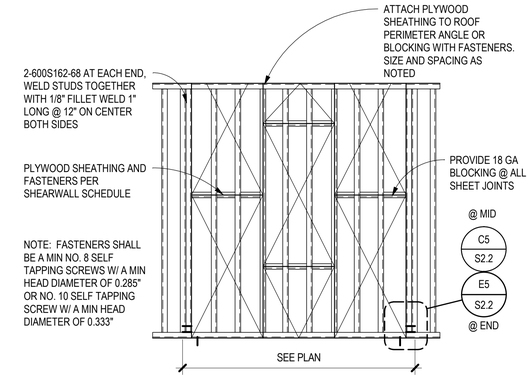

E7 INTERIOR SHEAR WALL ELEVATION

SCALE: NTS

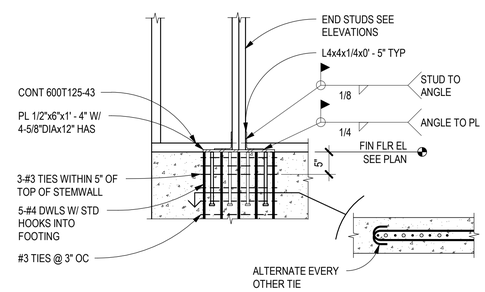

C5 SHEAR WALL TIE DOWN DETAIL

SCALE: 3/4" = 1'-0"

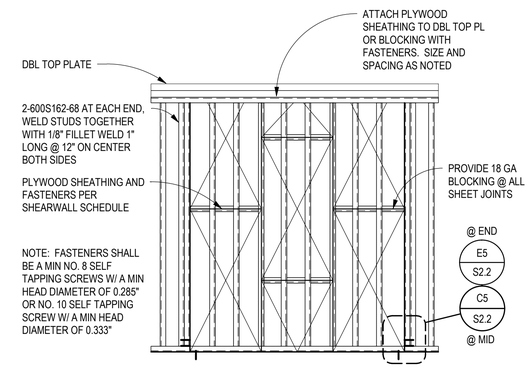

C7 PERIMETER SHEAR WALL ELEVATION

SCALE: NTS

SHEARWALL SCHEDULE

SW1	SHEARWALL WITH 600S162-43 STUDS AT 16" ON CENTER. PROVIDE 1/2" STRUCTURAL 1 PLYWOOD WITH MINIMUM NO. 8 TEK SCREWS AT 6" ON CENTER AT PANEL EDGES AND AT 12" ON CENTER IN REMAINING FIELD. PROVIDE BLOCKING AT ALL WALL PANEL EDGES.
SW2	SHEARWALL WITH 600S162-43 STUDS AT 16" ON CENTER. PROVIDE 1/2" STRUCTURAL 1 PLYWOOD WITH MINIMUM NO. 8 TEK SCREWS AT 4" ON CENTER AT PANEL EDGES AND AT 12" ON CENTER IN REMAINING FIELD. PROVIDE BLOCKING AT ALL WALL PANEL EDGES.

100% CONSTRUCTION DOCUMENTS

Chavez-Grieves
consulting engineers, inc.
4700 LINCOLN RD NE STE 102 • ALBUQUERQUE, NM 87109
PHONE (505) 344-4080 • FAX (505) 343-8759

autotroph
architecture.planning.sustainable design consulting

No.	Description	Date

Hwy 14 Senior Center

SHEARWALL ELEVATIONS

Project Number	1606
Date	10/20/2017
Drawn By	ADM/PS
Checked By	GHB

S2.2

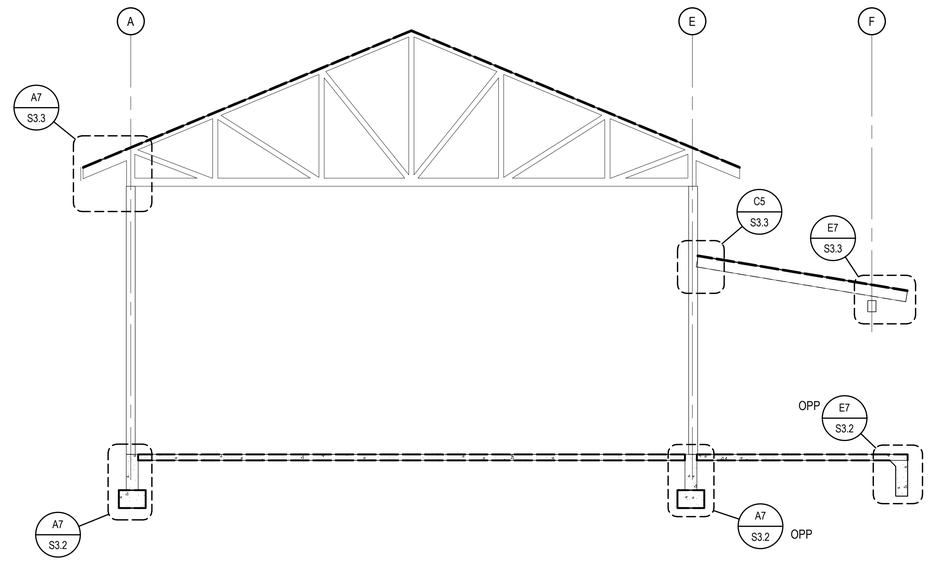

D5 BUILDING SECTION
SCALE: 1/4" = 1'-0"

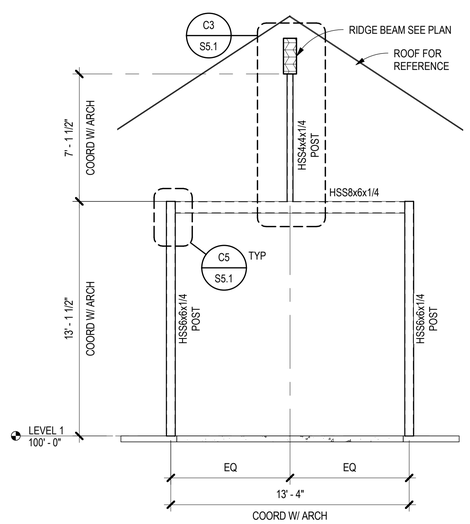

A3 HSS FRAME ELEVATION
SCALE: 1/4" = 1'-0"

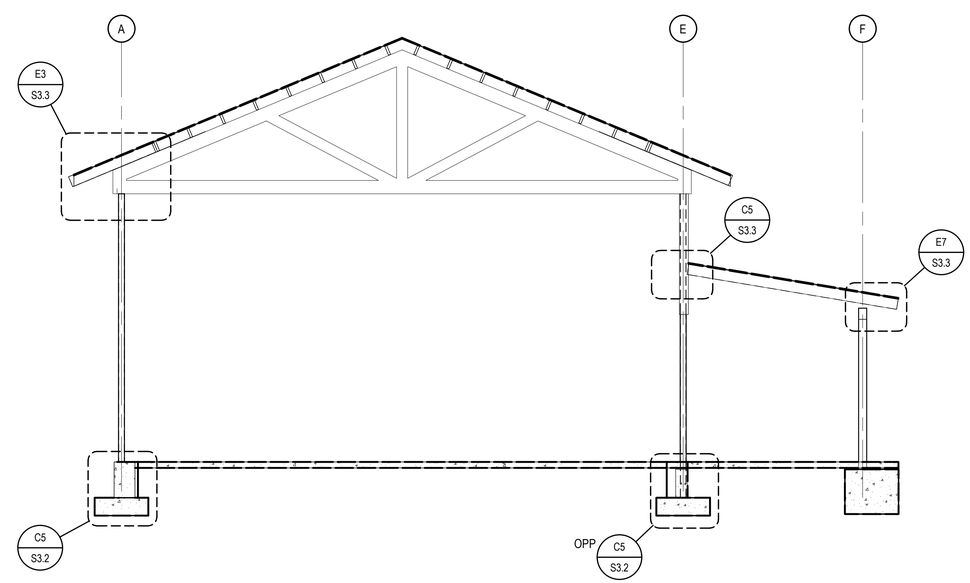

A5 BUILDING SECTION
SCALE: 1/4" = 1'-0"

100% CONSTRUCTION DOCUMENTS

Chavez-Grieves
consulting engineers, inc.
4700 LINCOLN RD NE STE 102 • ALBUQUERQUE, NM 87109
PHONE (505) 344-4080 • FAX (505) 343-8759

autotroph
architecture.planning.sustainable design consulting

No.	Description	Date

Hwy 14 Senior Center

BUILDING SECTIONS

Project Number	1606
Date	10/20/2017
Drawn By	ADM/PS
Checked By	GHB

S3.1

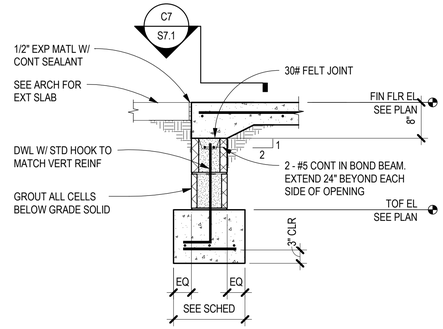

E3 FOUNDATION SECTION
SCALE: 3/4" = 1'-0"

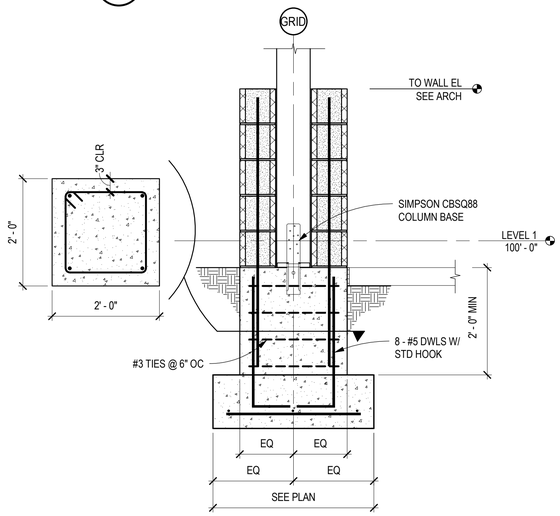

C3 FOUNDATION SECTION
SCALE: 3/4" = 1'-0"

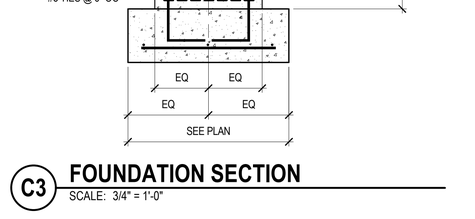

A3 FOUNDATION SECTION
SCALE: 3/4" = 1'-0"

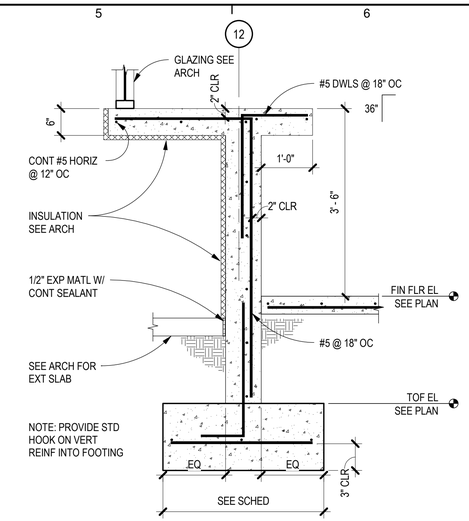

E5 FOUNDATION SECTION
SCALE: 3/4" = 1'-0"

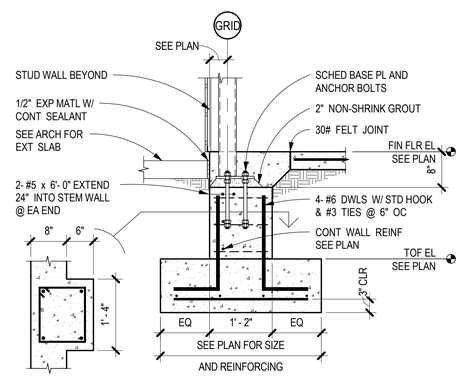

C5 FOUNDATION SECTION
SCALE: 3/4" = 1'-0"

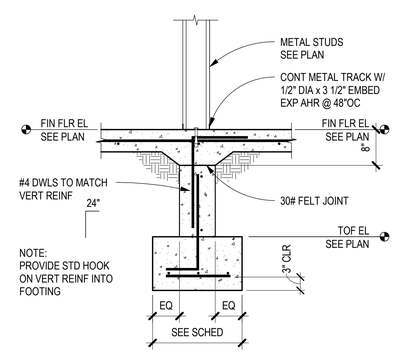

A5 FOUNDATION SECTION
SCALE: 3/4" = 1'-0"

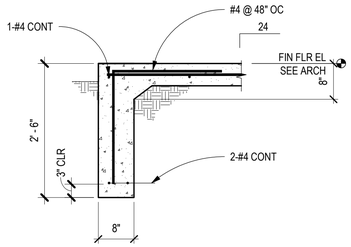

E7 FOUNDATION SECTION
SCALE: 3/4" = 1'-0"

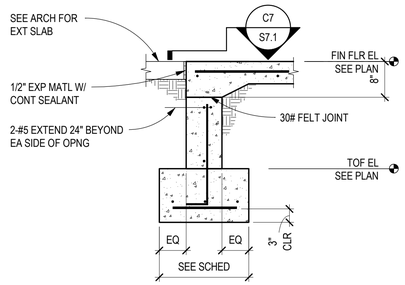

C7 FOUNDATION SECTION
SCALE: 3/4" = 1'-0"

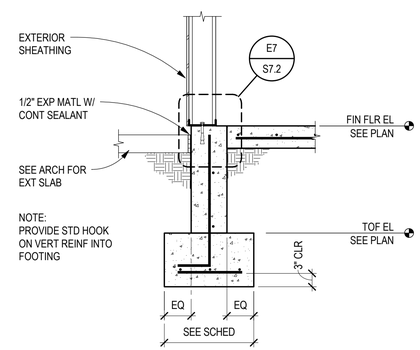

A7 FOUNDATION SECTION
SCALE: 3/4" = 1'-0"

100% CONSTRUCTION DOCUMENTS

Chavez-Grieves
consulting engineers, inc.
4700 LINCOLN RD NE STE 102 • ALBUQUERQUE, NM 87109
PHONE (505) 344-4080 • FAX (505) 343-8759

autotroph
architecture.planning.sustainable design consulting

No.	Description	Date

Hwy 14 Senior Center

FOUNDATION SECTIONS AND DETAILS

Project Number	1606
Date	10/20/2017
Drawn By	ADM/PS
Checked By	GHB

S3.2

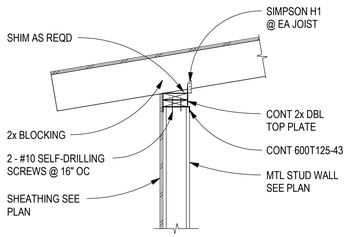

E1 ROOF FRAMING SECTION
SCALE: 3/4" = 1'-0"

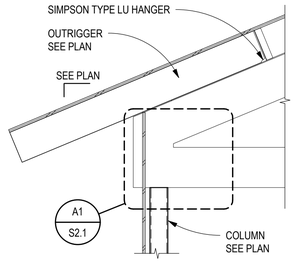

E3 ROOF TRUSS BRG DETAIL
SCALE: 3/4" = 1'-0"

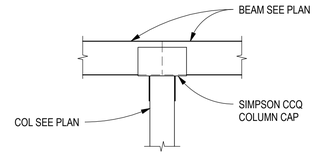

E5 FRAMING DETAIL
SCALE: 3/4" = 1'-0"

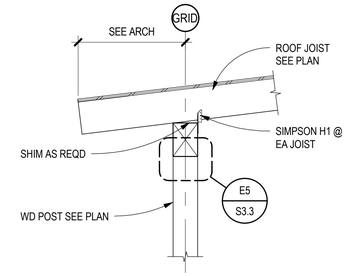

E7 ROOF FRAMING SECTION
SCALE: 3/4" = 1'-0"

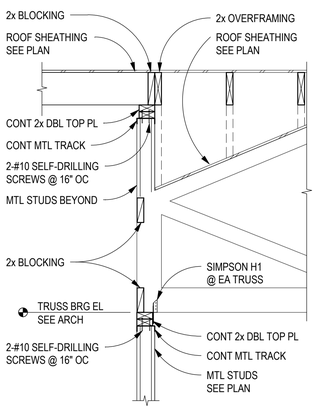

C1 ROOF FRAMING SECTION
SCALE: 3/4" = 1'-0"

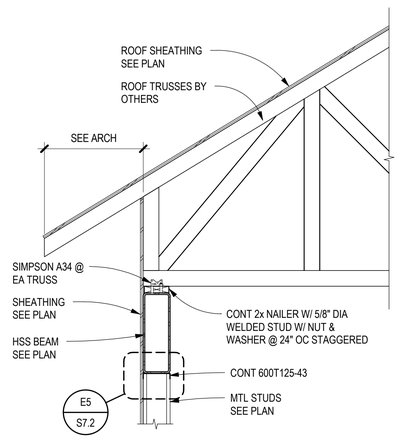

C3 ROOF TRUSS BRG DETAIL
SCALE: 3/4" = 1'-0"

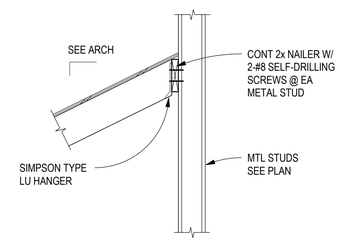

C5 ROOF FRAMING DETAIL
SCALE: 3/4" = 1'-0"

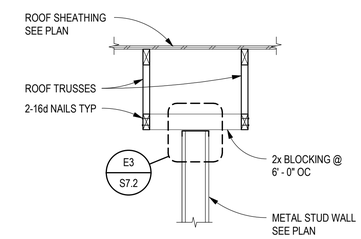

C7 TYPICAL NON-BRG WALL BRACING
SCALE: 3/4" = 1'-0"

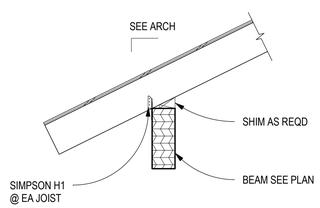

A1 ROOF CONNECTION DETAIL
SCALE: 3/4" = 1'-0"

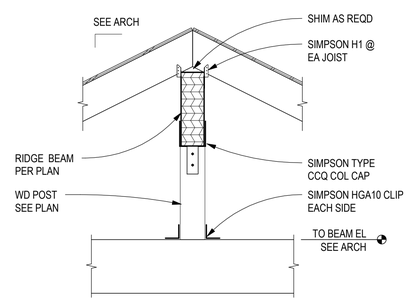

A3 ROOF CONNECTION DETAIL
SCALE: 3/4" = 1'-0"

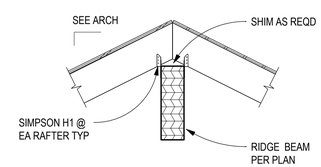

A5 ROOF CONNECTION DETAIL
SCALE: 3/4" = 1'-0"

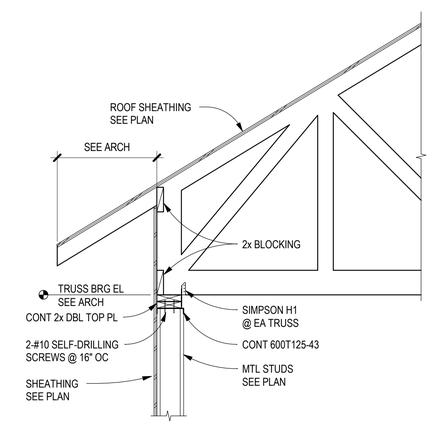

A7 ROOF TRUSS BRG DETAIL
SCALE: 3/4" = 1'-0"

100% CONSTRUCTION DOCUMENTS

Chavez-Grieves
consulting engineers, inc.
4700 LINCOLN RD NE STE 102 • ALBUQUERQUE, NM 87109
PHONE (505) 344-4080 • FAX (505) 343-8759

autotroph
architecture.planning.sustainable design consulting

No.	Description	Date

Hwy 14 Senior Center

ROOF FRAMING SECTIONS AND DETAILS

Project Number	1606
Date	10/20/2017
Drawn By	ADM/PS
Checked By	GHB

S3.3

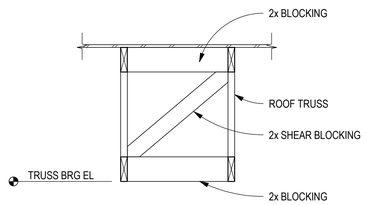

E1 ROOF FRAMING DETAIL
SCALE: 3/4" = 1'-0"

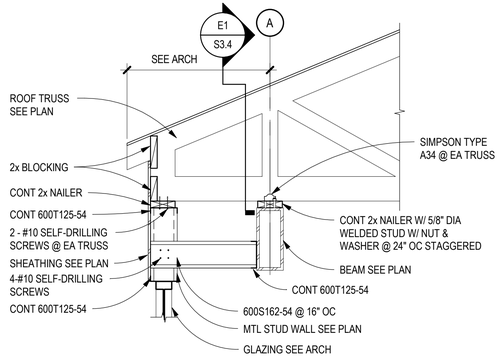

E3 FRAMING SECTION
SCALE: 3/4" = 1'-0"

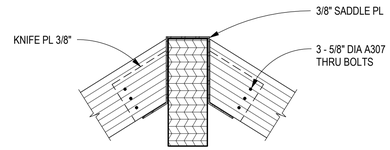

E5 FRAMING DETAIL
SCALE: 3/4" = 1'-0"

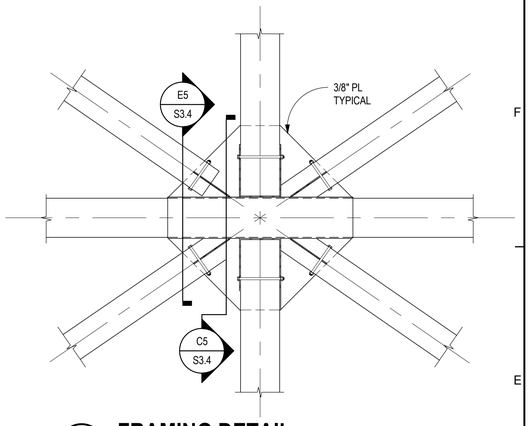

E7 FRAMING DETAIL
SCALE: 3/4" = 1'-0"

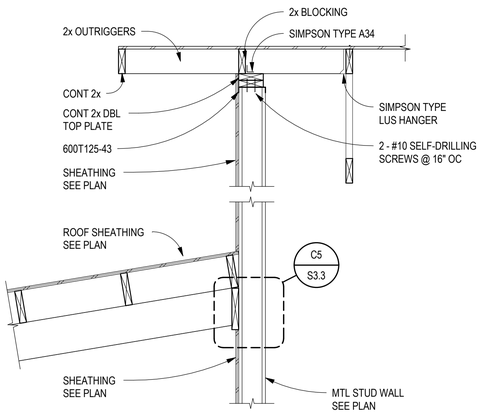

C1 FRAMING SECTION
SCALE: 3/4" = 1'-0"

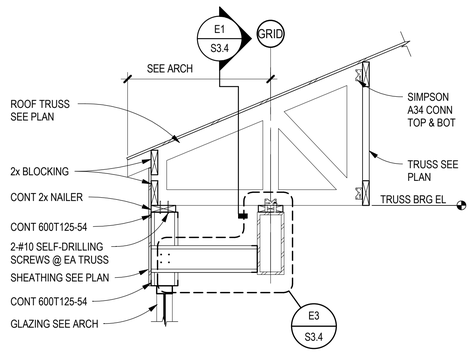

C3 ROOF FRAMING SECTION
SCALE: 3/4" = 1'-0"

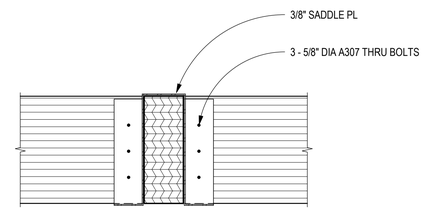

C5 FRAMING DETAIL
SCALE: 3/4" = 1'-0"

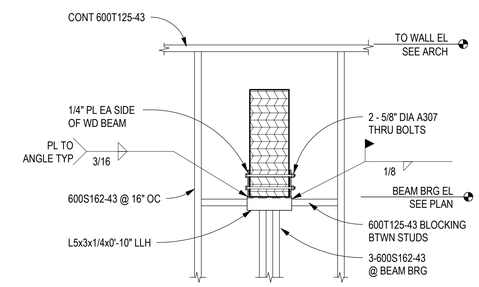

C7 BEAM BRG AT STUD ELEV
SCALE: 3/4" = 1'-0"

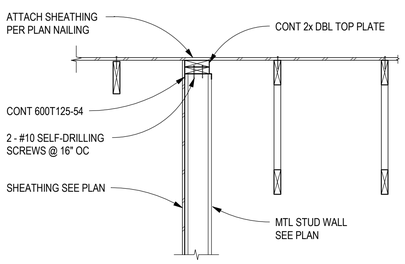

A1 ROOF SECTION
SCALE: 3/4" = 1'-0"

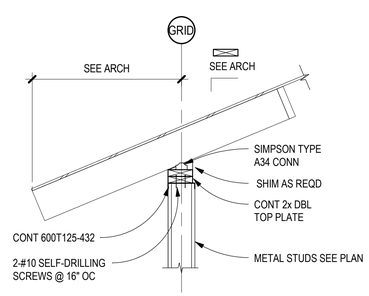

A3 ROOF FRAMING SECTION
SCALE: 3/4" = 1'-0"

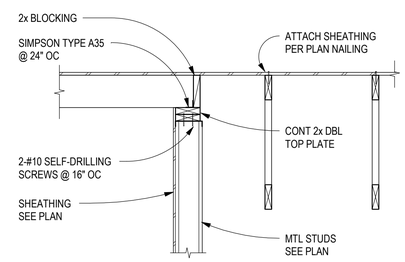

A5 ROOF SECTION
SCALE: 3/4" = 1'-0"

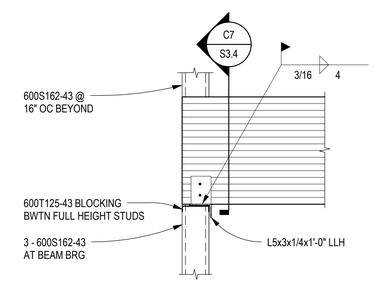

A7 BEAM BRG AT STUD WALL CONN
SCALE: 3/4" = 1'-0"

100% CONSTRUCTION DOCUMENTS

Chavez-Grieves
consulting engineers, inc.
4700 LINCOLN RD NE STE 102 • ALBUQUERQUE, NM 87109
PHONE (505) 344-4080 • FAX (505) 343-8759

autotroph
architecture.planning.sustainable design consulting

No.	Description	Date

Hwy 14 Senior Center

ROOF FRAMING SECTIONS AND DETAILS

Project Number	1606
Date	10/20/2017
Drawn By	ADM/PS
Checked By	GHB

S3.4

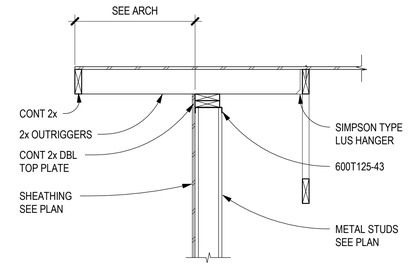

E5 ROOF FRAMING SECTION
SCALE: 3/4" = 1'-0"

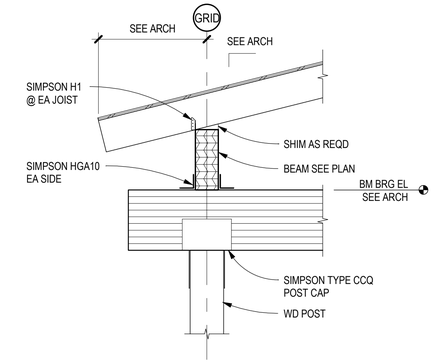

E7 ROOF FRAMING SECTION
SCALE: 3/4" = 1'-0"

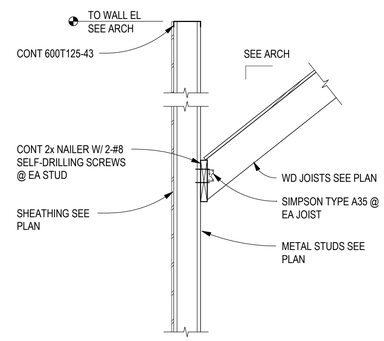

C5 ROOF FRAMING SECTION
SCALE: 3/4" = 1'-0"

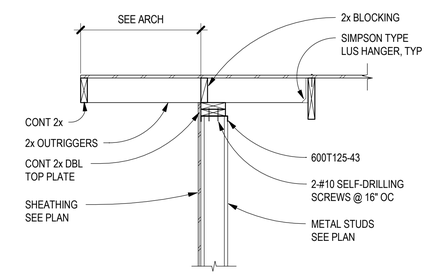

C7 ROOF FRAMING SECTION
SCALE: 3/4" = 1'-0"

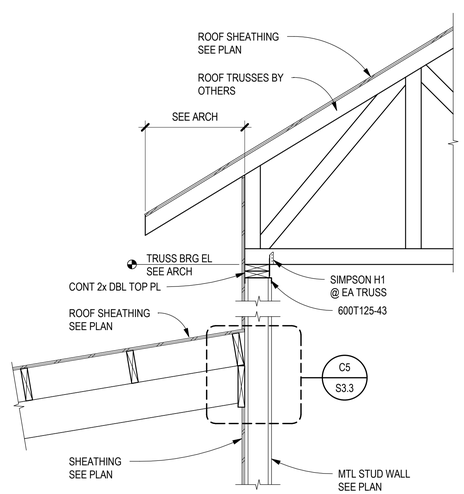

A3 ROOF TRUSS BRG DETAIL
SCALE: 3/4" = 1'-0"

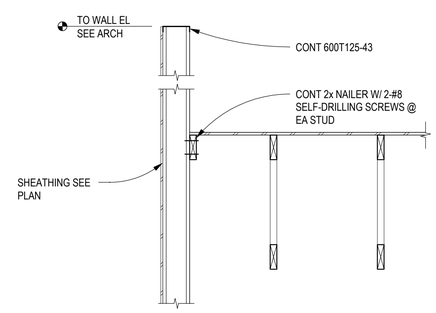

A5 ROOF FRAMING SECTION
SCALE: 3/4" = 1'-0"

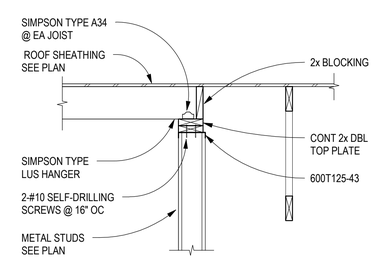

A7 ROOF FRAMING SECTION
SCALE: 3/4" = 1'-0"

100% CONSTRUCTION DOCUMENTS

Chavez-Grieves
consulting engineers, inc.
4700 LINCOLN RD NE STE 102 • ALBUQUERQUE, NM 87109
PHONE (505) 344-4080 • FAX (505) 343-8759

autotroph
architecture.planning.sustainable design consulting

No.	Description	Date

Hwy 14 Senior Center

ROOF FRAMING SECTIONS AND DETAILS

Project Number	1606
Date	10/20/2017
Drawn By	ADM/PS
Checked By	GHB

S3.5

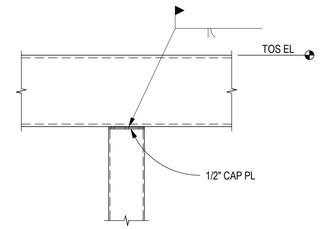

E5 HSS BEAM OVER COLUMN CONN
SCALE: 3/4" = 1'-0"

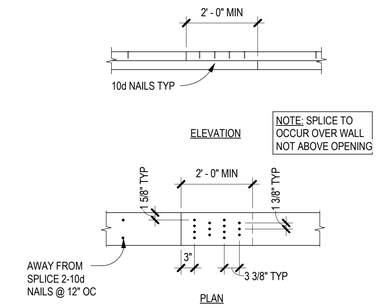

E7 TOP PLATE SPLICE DETAIL
SCALE: 3/4" = 1'-0"

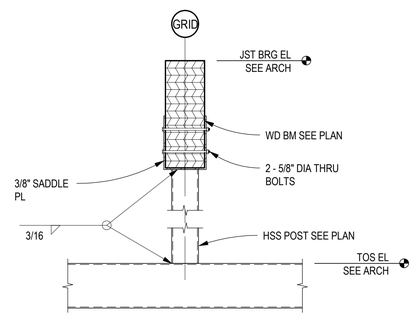

C3 ROOF FRAMING DETAIL
SCALE: 3/4" = 1'-0"

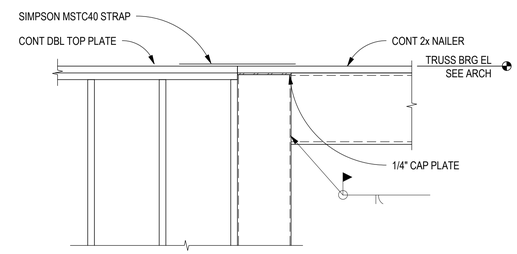

C5 HSS BEAM TO COLUMN CONN
SCALE: 3/4" = 1'-0"

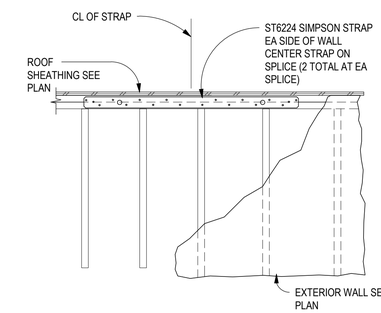

C7 TOP PLATE SPLICE DETAIL
SCALE: 3/4" = 1'-0"

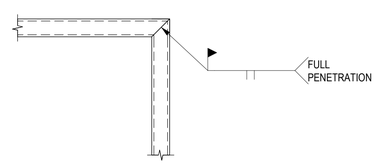

A3 HSS BEAM MITER CONN
SCALE: 3/4" = 1'-0"

NAILING SCHEDULE	
LOCATION	ROOF
DIAPHRAGM BOUNDARY*	8d @ 6" OC
PANEL EDGES	8d @ 6" OC
IN FIELD	8d @ 12" OC

*DIAPHRAGM BOUNDARY LOCATIONS INCLUDE THE FOLLOWING:
- PERIMETER OF THE BUILDING
- ALONG UNIT SEPARATION WALLS
- ALONG CORRIDOR WALLS

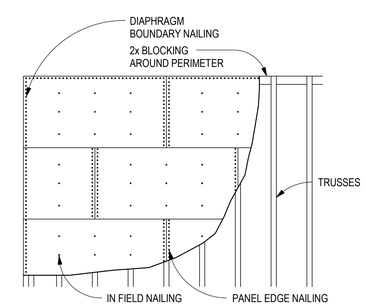

ROOF SHEATHING IS 15/32" STRUCTURAL 1 PLYWOOD

A5 SHEATHING NAILING SCHEDULE
SCALE: 3/4" = 1'-0"

100% CONSTRUCTION DOCUMENTS

Chavez-Grieves
consulting engineers, inc.
4700 LINCOLN RD NE STE 102 • ALBUQUERQUE, NM 87109
PHONE (505) 344-4080 • FAX (505) 343-8759

autotroph
architecture.planning.sustainable design consulting

No.	Description	Date

Hwy 14 Senior Center

DETAILS

Project Number	1606
Date	10/20/2017
Drawn By	ADM/PS
Checked By	GHB

S5.1

COLD-FORMED METAL EXTERIOR WALL STUDS		
BUILDING	LOCATION	STUDS & SPACING
NEW ADDITION	15'-0" WALL HEIGHT	600S137-43 @ 16" OC

NOTE:
TRACKS ON TOP AND BOTTOM OF WALLS TO MATCH SIZE AND THICKNESS OF STUDS

WALL HEIGHT = DISTANCE FROM BOTTOM TO TOP SUPPORT OF WALLS (I.E. FLOOR TO ROOF OR FLOOR TO FLOOR)

LIGHTGAGE LINTEL SCHEDULE			
SPAN	SIZE	STUDS AT BEARING	FULL HEIGHT STUDS
0'-0" - 4'-0"	2-600S162-43	1 - 600S162-43	1 - 600S162-43
4'-1" - 8'-0"	2-800S162-43	1 - 600S162-43	2 - 600S162-43
8'-1" - 12'-0"	2-1000S162-54	2 - 600S162-43	3 - 600S162-43

BASE PLATE SCHEDULE			
BASE PLATE			ANCHOR BOLTS
MARK	TYPE	SIZE "T"x"A"x"B"	F1554 ANCHOR BOLTS
BP1	A	PL 3/4" x10"x1'-0"	4 - 3/4" DIA x 12"

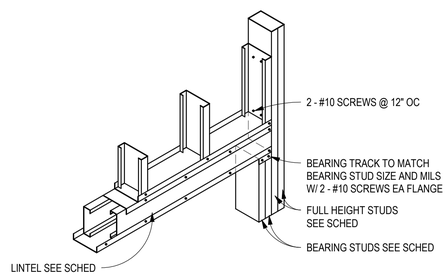

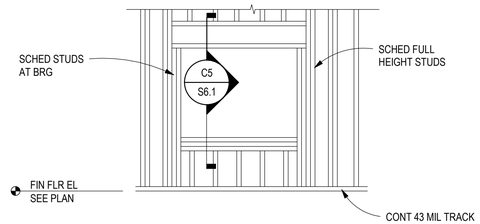

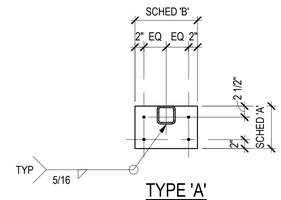

TYPE 'A'

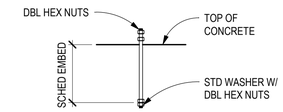

TYPICAL ANCHOR BOLT

CONTINUOUS FOOTING SCHEDULE					
	SIZE		REINFORCING	REINFORCING	
MARK	WIDTH	DEPTH	CONT REINF	TRANS REINF	REMARKS
CF18	1' - 6"	1' - 0"	3 - #4	#4 @ 32" OC	
CF36	3' - 0"	1' - 3"	5 - #4 T&B	#5 @ 18" OC	
CF48	4' - 0"	1' - 3"	5 - #5 T&B	#5 @ 18" OC	

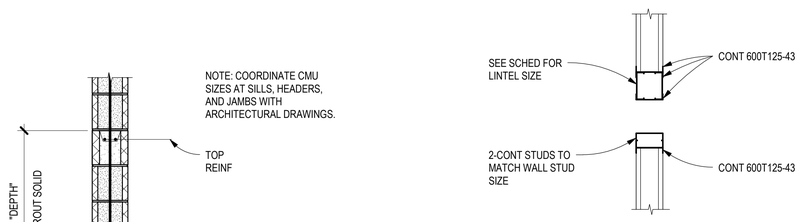

SPOT FOOTING SCHEDULE					
	SIZE				
MARK	WIDTH	LENGTH	DEPTH	REINFORCING	REMARKS
F36A	3' - 0"	3' - 0"	1' - 0"	4 - #5 EA WAY	
F36B	3' - 0"	3' - 0"	2' - 6"	4 - #5 EA WAY	
F48	4' - 0"	4' - 0"	1' - 3"	5 - #5 EA WAY	

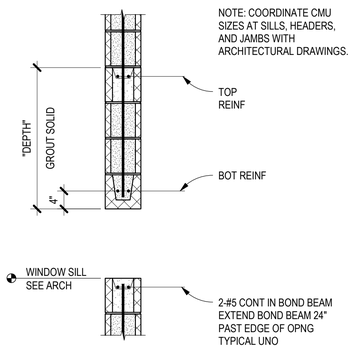

C3 TYPICAL CMU LINTEL SECTION
SCALE: 3/4" = 1'-0"

C5 TYPICAL COLD-FORMED LINTEL SECTION
SCALE: 3/4" = 1'-0"

WALL SCHEDULE				
		REINFORCING		
WALL MARK	WALL	VERTICAL	HORIZONTAL	REMARKS
W1	8" CONC	#4 @ 16" OC	#4 @ 12" OC	
W2	8" CMU	#5 @ 8" OC	STD LADDER JOINT REINF @ 16" OC	BOND BEAMS @ 48" OC
W3	8" CMU	#5 @ 16" OC	STD LADDER JOINT REINF @ 16" OC	BOND BEAMS @ 48" OC
W4	600S162-43			600S162-43 @ 16" OC
W5	400S162-43			400S162-43 @ 16" OC

SLAB-ON-GRADE SCHEDULE							
	SLAB			REINFORCING			
MARK	THICKNESS	MATL	CONC STRENGTH	REINFORCING	REINF GRADE	BEARING STRATA	COMMENTS
SG1	4"	CONCRETE	3000 PSI	#4 @ 18" OC EA WAY	A615 GRADE 60	15 MIL VAPOR RETARDER OVER COMPACTED SUBGRADE.	

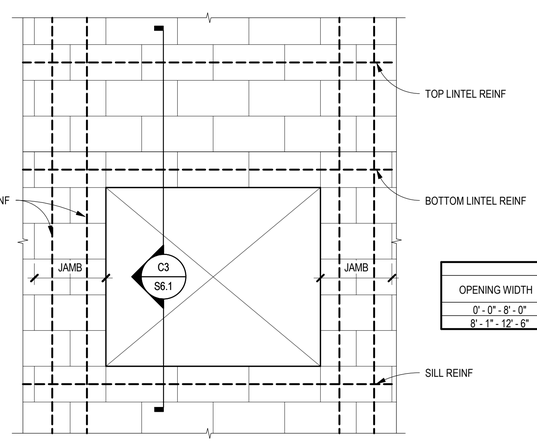

DECK SCHEDULE						
	WOOD DECK		DECK ATTACHMENTS		TOTAL DECK THICKNESS	
MARK	THICK	TYPE	ATTACH IN FIELD OF PANEL	ATTACH AT PANEL EDGES		COMMENTS
D1	1/2"	1/2" PLYWOOD	10d NAILS @ 12" OC	10d NAILS @ 6" OC	1/2"	

CMU LINTEL SCHEDULE							
OPENING WIDTH	WIDTH	DEPTH	LINTEL REINFORCING			JAMB WIDTH	JAMB REINF PER CELL
			TOP	BOTTOM	MIDDLE		
0' - 0" - 8' - 0"	8"	16"	2 - #5	2 - #5	-	16"	1 - #5
8' - 1" - 12' - 6"	8"	24"	2 - #5	2 - #5	-	16"	1 - #5

REINFORCING LAP SCHEDULE				
REINFORCEMENT TYPE	#6 AND SMALLER (#db)	#7 AND LARGER (#db)	MINIMUM LENGTH (IN)	COMMENTS
CONTINUOUS WALL FOOTINGS AND STEMWALLS	30	30	18	
RETAINING WALLS AND BASEMENT WALL VERTICAL REINFORCING	57	72	12	
RETAINING WALLS AND BASEMENT WALL HORIZONTAL REINFORCING	57	72	12	
CONCRETE COLUMNS NOT SUPPORTING LATERAL FORCES	30	30	12	
CONCRETE COLUMNS SUPPORTING LATERAL FORCES	57	72	12	
TOP FLEXURAL REINFORCEMENT, INCLUDING BEAMS, GRADE BEAMS, AND COMBINED COLUMN FOOTING AT BRACED FRAME AND MOMENT FRAMES	57	72	12	
BOTTOM FLEXURAL REINFORCEMENT, INCLUDING BEAMS, GRADE BEAMS, AND COMBINED COLUMN FOOTING AT BRACED FRAME AND MOMENT FRAMES	44	55	12	
SLABS-ON-GRADE	30	30	12	
MINIMUM EMBEDMENT OF STANDARD HOOKS INTO CONCRETE BASE	16	16	6	INCREASE LENGTH FOR # 11 BARS AND LARGER BY A FACTOR OF 1.4
ALL REBAR LAPS IN CMU EXCEPT WHERE NOTED AS EXTENDED LAPS	48	48	12	
EXTENDED LAPS IN CMU (WHERE SPECIFIED IN DETAILS)	72	72	12	

A1 CMU LINTEL SCHEDULE
SCALE: 12" = 1'-0"

100% CONSTRUCTION DOCUMENTS

Chavez-Grieves
consulting engineers, inc.
4700 LINCOLN RD NE STE 102 • ALBUQUERQUE, NM 87109
PHONE (505) 344-4080 • FAX (505) 343-8759

autotroph
architecture.planning.sustainable design consulting

No.	Description	Date

Hwy 14 Senior Center

SCHEDULES

Project Number	1606
Date	10/20/2017
Drawn By	ADM/PS
Checked By	GHB

S6.1

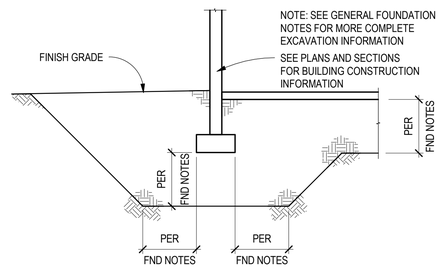

E3 TYPICAL FND EXCAVATION DETAIL
SCALE: NTS

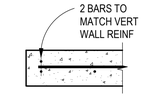

END WALL

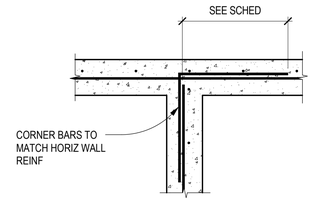

WALL TEE INTERSECTION

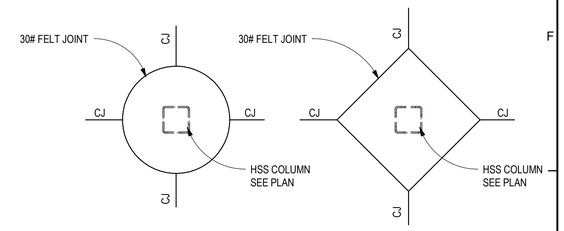

NOTE : CONTRACTOR'S OPTION FOR TYPE TO BE USED. PLACE BLOCKOUTS AT ALL COLUMNS .

NOTE: ENLARGED BLOCKOUTS MAY BE REQUIRED AT BRACED FRAME LOCATIONS FOR GUSSET PLATE CLEARANCE.

E7 TYPICAL COLUMN BLOCKOUT
SCALE: NTS

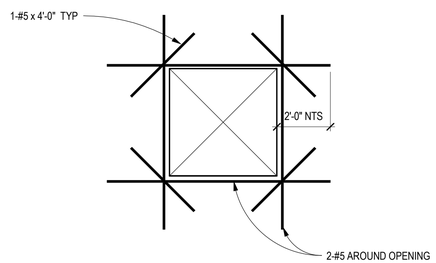

C3 TYPICAL OPNG IN CONC WALL DETAIL
SCALE: NTS

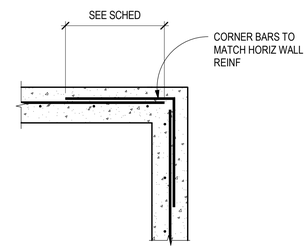

WALL CORNER

NOTE: REINFORCING SHOWN ON FOUNDATION SECTIONS AND SPECIFICALLY REFERENCED DETAILS SHALL TAKE GOVERN OVER REINFORCING IN STANDARD DETAILS.

C5 TYPICAL SINGLE MAT WALL REINF
SCALE: NTS

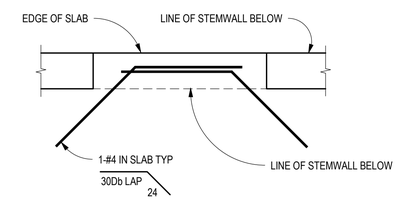

PLAN

C7 TYPICAL SLAB REINF AT OPNG
SCALE: NTS

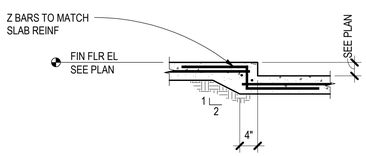

A1 TYPICAL DEPRESSED SLAB
SCALE: 3/4" = 1'-0"

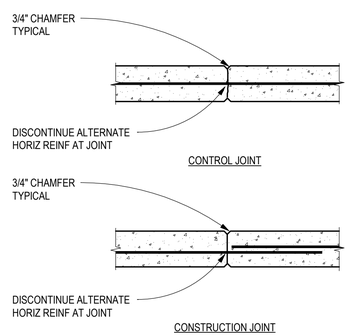

A3 TYPICAL WALL JOINT DETAIL
SCALE: NTS

NOTE: AT CONTRACTOR'S OPTION, A PLASTIC JOINT FORMER MAY BE INSTALLED INSTEAD OF THE SAWCUT

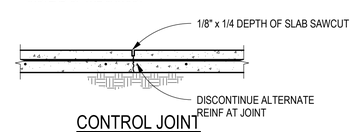

CONTROL JOINT

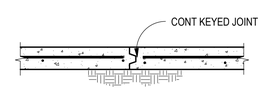

CONSTRUCTION JOINT

A5 TYPICAL SLAB JOINT
SCALE: NTS

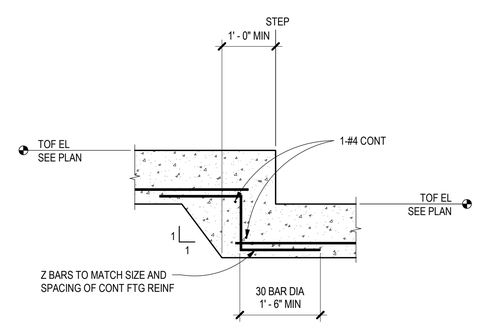

A7 TYPICAL STEPPED FOOTING DETAIL
SCALE: NTS

100% CONSTRUCTION DOCUMENTS

Chavez-Grieves
consulting engineers, inc.
4700 LINCOLN RD NE STE 102 • ALBUQUERQUE, NM 87109
PHONE (505) 344-4080 • FAX (505) 343-8759

autotroph
architecture.planning.sustainable design consulting

No.	Description	Date

Hwy 14 Senior Center

TYPICAL CONCRETE DETAILS

Project Number	1606
Date	10/20/2017
Drawn By	ADM/PS
Checked By	GHB

S7.1

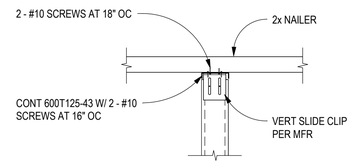

E3 TYPICAL SLIP TRACK ASSEMBLY
SCALE: 3/4" = 1'-0"

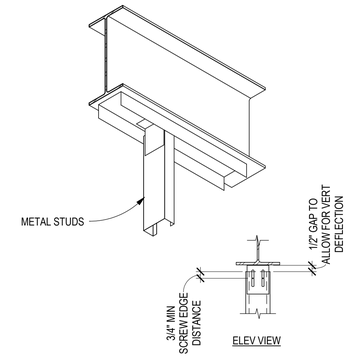

E5 TYPICAL SLIP TRACK ASSEMBLY
SCALE: 3/4" = 1'-0"

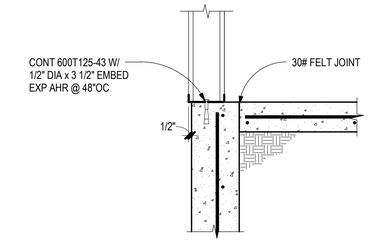

E7 TYPICAL STUDS AT STEMWALL
SCALE: 1" = 1'-0"

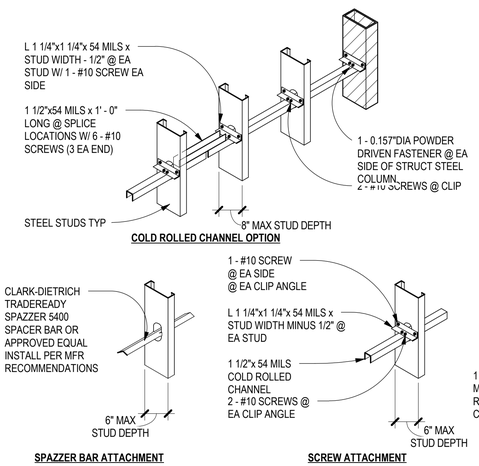

C3 TYPICAL BRIDGING DETAILS
SCALE: NTS

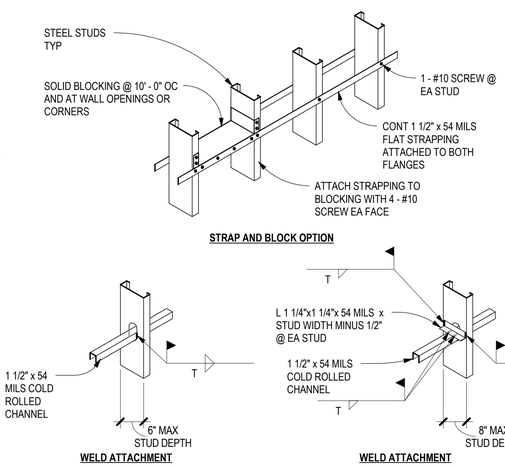

C7 TYPICAL STUDS TO TRACK DETAIL
SCALE: NTS

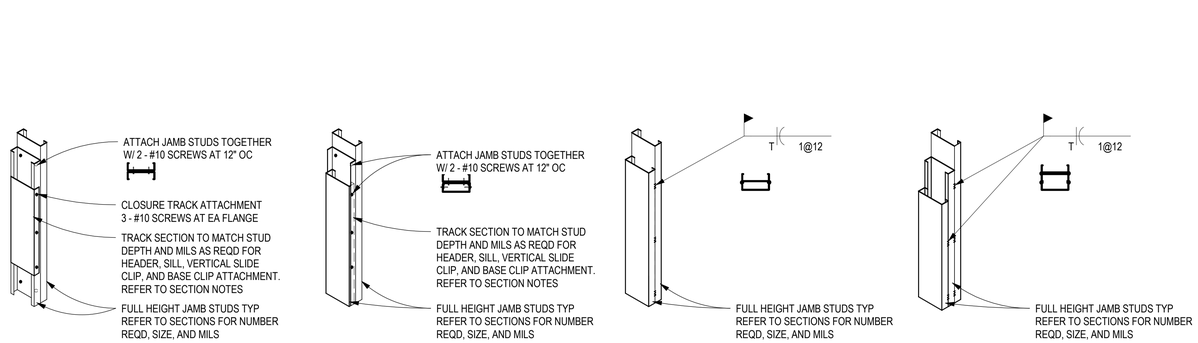

A1 TYPICAL STUD JAMB ATTACHMENT DETAILS
SCALE: NTS

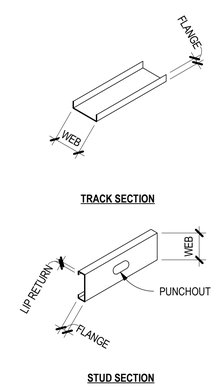

MILS TO GAGE CONVERSION CHART

MILS	GAGE
33 MILS	20 GAGE
43 MILS	18 GAGE
54 MILS	16 GAGE
68 MILS	14 GAGE
97 MILS	12 GAGE

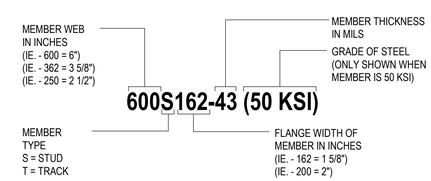

A5 TYPICAL COLD-FORMED MEMBER DESIGNATION
SCALE: NTS

100% CONSTRUCTION DOCUMENTS

Chavez-Grieves
consulting engineers, inc.
4700 LINCOLN RD NE STE 102 • ALBUQUERQUE, NM 87109
PHONE (505) 344-4080 • FAX (505) 343-8759

autotroph
architecture.planning.sustainable design consulting

No.	Description	Date

Hwy 14 Senior Center

TYPICAL COLD-FORMED DETAILS

Project Number	1606
Date	10/20/2017
Drawn By	ADM/PS
Checked By	GHB

S7.2

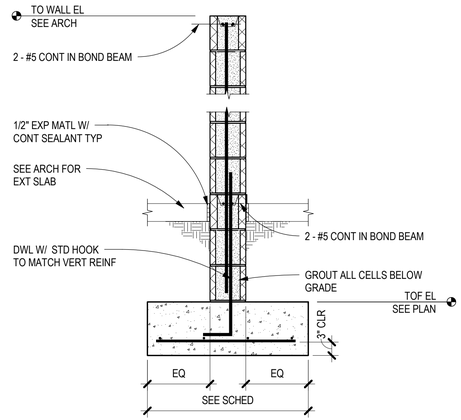

E3 8" CMU SITE WALL SECTION

SCALE: 3/4" = 1'-0"

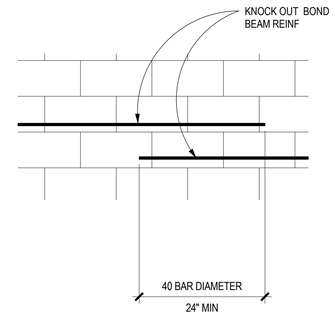

E5 TYPICAL STEP IN BOND BEAM

SCALE: 3/4" = 1'-0"

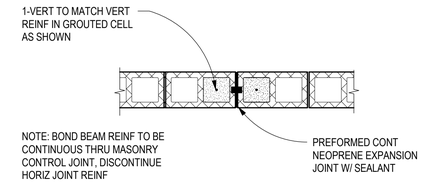

E7 TYPICAL CMU CNRTL JOINT (MCJ)

SCALE: 3/4" = 1'-0"

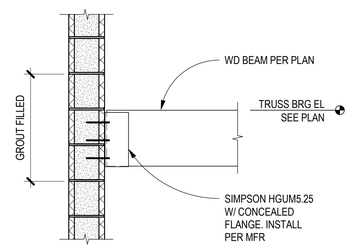

B2 WD BEAM TO CMU WALL

SCALE: 3/4" = 1'-0"

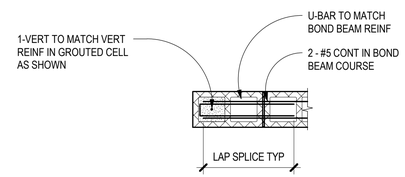

BOND BEAM AT WALL END

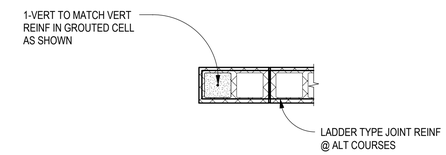

WALL END

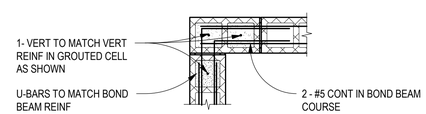

BOND BEAM AT WALL CORNER

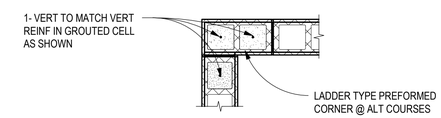

WALL CORNER

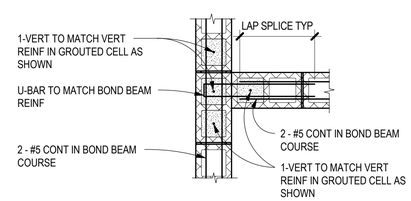

BOND BEAM AT WALL TEE

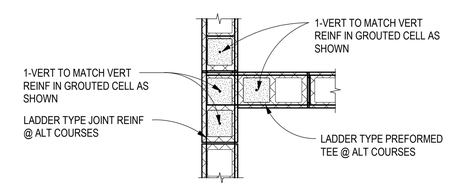

WALL TEE

A5 TYPICAL 8" CMU PLAN DETAILS

SCALE: 3/4" = 1'-0"

A7 TYPICAL 8" CMU PLAN DETAILS

SCALE: 3/4" = 1'-0"

100% CONSTRUCTION DOCUMENTS

Chavez-Grieves
consulting engineers, inc.
4700 LINCOLN RD NE STE 102 • ALBUQUERQUE, NM 87109
PHONE (505) 344-4080 • FAX (505) 343-8759

autotroph
architecture.planning.sustainable design consulting

No.	Description	Date

Hwy 14 Senior Center

TYPICAL MASONRY DETAILS

Project Number	1606
Date	10/20/2017
Drawn By	ADM/PS
Checked By	GHB

S7.3

MECHANICAL LEGEND

HVAC

SYMBOL DOUBLE	SYMBOL SINGLE	DESCRIPTION
		RETURN DUCTWORK UP
		SUPPLY DUCTWORK UP
		EXHAUST DUCTWORK UP
		ROUND DUCTWORK UP
		RETURN DUCTWORK DOWN
		SUPPLY DUCTWORK DOWN
		EXHAUST DUCTWORK DOWN
		ROUND DUCTWORK DOWN
		TRANSITION RECTANGULAR TO RECTANGULAR OR TRANSITION ROUND TO ROUND
		TRANSITION RECTANGULAR TO ROUND
		DUCTWORK ROUTED BELOW OTHER DUCTWORK
		CAPPED DUCTWORK
		CONICAL TAP
		RECTANGULAR TAP
		FLEXIBLE DUCT
		SQUARE SUPPLY AIR DIFFUSER
		RETURN AIR GRILLE

TEXT SYMBOLS

SYMBOL	DESCRIPTION
#	MECHANICAL KEYED NOTES
###	EQUIPMENT DESIGNATION
### CFM GRILLE A	AIR DEVICE DESIGNATION
#	REVISION DELTA
##"x##"	RECTANGULAR DUCTWORK SIZING
##"ø	ROUND DUCTWORK SIZING
T	THERMOSTAT

NOTE: THIS SYMBOLS LEGEND IS A GENERAL REPRESENTATION OF DEVICES USED. SOME PROJECTS MAY NOT UTILIZE ALL SYMBOLS REPRESENTED. COORDINATE ALL SYMBOLS FROM PLANS.

GENERAL NOTES:

MECHANICAL CONTRACTOR SHALL:

A. PROVIDE AND INSTALL ALL MATERIAL AND EQUIPMENT AS REQUIRED BY UPC, UMC, SMACNA, NFPA, LIFE SAFETY CODE, GAS CODE, AND ALL OTHER LOCAL CODES AND ORDINANCES THAT APPLY WHETHER SHOWN ON THE DRAWINGS OR NOT. WHERE THERE IS A DISCREPANCY BETWEEN THE CODES OR ORDINANCES AND THE DRAWINGS, THE MORE STRINGENT APPLICATION SHALL APPLY.

B. LAYOUT AND INSTALL COMPLETE AND FUNCTIONAL MECHANICAL SYSTEMS, INCLUDING TEMPORARY CUTOFF OF EXISTING UTILITIES, AND ALL CUTTING, PATCHING, AND REPAIR ASSOCIATED WITH INSTALLING THE SYSTEMS.

C. VIBRATIONALLY ISOLATE FROM THE BUILDING STRUCTURE ALL EQUIPMENT AND PIPING IN THE MECHANICAL ROOM, INCLUDING GAS, AIR INTAKE, EXHAUST, ETC. COORDINATE TO ASSURE THAT AS QUIET AN OPERATING SYSTEM AS POSSIBLE IS INSTALLED.

D. INSTALL FREE AREA OF THE DUCT WORK AS SHOWN ON THE DRAWINGS PER SMACNA.

E. PROVIDE ALL DUCT WORK CONNECTIONS AND TRANSITIONS AT GRILLES, DIFFUSERS, REGISTERS, FILTERS, COILS, AND OTHER LOCATIONS WHERE REQUIRED. CONSTRUCT ALL TRANSITIONS AND CONNECTIONS ACCORDING TO SMACNA STANDARDS.

F. PROVIDE A TESTING AND BALANCING (T&B) AGENCY. THE T&B AGENCY SHALL BE RESPONSIBLE FOR PROVIDING AND INSTALLING SHEAVES, BALANCING DAMPERS, AND ALL EQUIPMENT NECESSARY TO PROVIDE PLUS OR MINUS 10% OF THE GPM AND/OR 10% OF CFM REQUIRED AT EACH TERMINAL UNIT. NO CHANGE ORDERS WILL BE ALLOWED AS A RESULT OF THE CONTRACTOR'S FAILURE TO PROVIDE EQUIPMENT NECESSARY FOR TEST AND BALANCE WHETHER SHOWN ON THE DRAWINGS OR NOT.

G. COORDINATE WORK WITH THE GENERAL CONTRACTOR TO HAVE THE ROOFTOP EQUIPMENT, DUCT WORK, AND INSULATION JACKETS PAINTED TO THE ARCHITECT'S REQUIREMENTS.

H. PROVIDE AND INSTALL ALL MECHANICAL EQUIPMENT, TRANSFORMERS, RELAYS, AND OTHER ELEMENTS NECESSARY FOR A COMPLETE OPERATING SYSTEM. COMPLETE ALL 24 VOLT CONTROL WIRING AND EQUIPMENT TO THE ABOVE. ALL LINE VOLTAGE WIRING TO THE ABOVE SHALL BE COMPLETED BY THE ELECTRICAL CONTRACTOR.

I. ALTER DIMENSIONS OF THE DUCT WORK IN THE CEILING SPACE FROM SIZES INDICATED ON THE DRAWINGS ONLY AT SPECIFIC LOCATIONS WHEN NECESSARY TO FIT THE DUCT WORK IN THE SPACE AVAILABLE. REROUTE DUCT WORK IN CEILING SPACE TO AVOID OTHER MECHANICAL EQUIPMENT, LIGHT FIXTURES, ETC. MAINTAIN THE SAME FREE AREA AND SUBMIT PROPOSED CHANGES TO THE ENGINEER FOR APPROVAL. BE RESPONSIBLE FOR VERIFYING SPACE LIMITATIONS BEFORE DUCT WORK FABRICATION AND SHALL MAKE CHANGES ACCORDINGLY. PROVIDE ALL NECESSARY TRANSITIONS.

J. COORDINATE ALL PROPOSED ROOF PENETRATIONS WITH GENERAL CONTRACTOR AND ARCHITECT AND RELOCATE IF NECESSARY. COORDINATE WITH GENERAL CONTRACTOR/ARCHITECT/OWNER.

K. INSTALL CONDENSATE AND OVERFLOW PIPING FROM ALL MECHANICAL EQUIPMENT DRAIN POINTS. EXTEND AND TERMINATE PER UMC/UPC. ALL INTERIOR CONDENSATE AND OVERFLOW PIPING SHALL BE INSULATED PER SPECIFICATIONS FOR APPROPRIATE TEMPERATURE RANGE.

L. INSULATE ALL DUCTWORK WITH A MINIMUM OF R-6 INSULATION. DUCT LINER IS NOT ACCEPTABLE AS A SUBSTITUTE FOR DUCT INSULATION.

MECHANICAL / ELECTRICAL RESPONSIBILITY TABLE

SYM	UNIT		DISCONNECT		STARTER/CONTACTOR		CONTROL WIRE		CONTROL CONDUIT		AUTO SHUT-OFF	
	PROVIDED	INSTALLED	PROVIDED	INSTALLED	PROVIDED	INSTALLED	PROVIDED	INSTALLED	PROVIDED	INSTALLED	PROVIDED	INSTALLED
SSU	MC	MC	MC	EC	EC	EC	MC	MC	EC	EC	N/A	N/A
CDU	MC	MC	MC	EC	EC	EC	MC	MC	EC	EC	N/A	N/A
MUA	MC	MC	MC	EC	EC	EC	MC	MC	EC	EC	N/A	N/A
KH	MC	MC	MC	EC	EC	EC	MC	MC	EC	EC	N/A	N/A
KHF	MC	MC	MC	EC	EC	EC	MC	MC	EC	EC	N/A	N/A
DH	MC	MC	MC	EC	EC	EC	MC	MC	EC	EC	N/A	N/A
DHF	MC	MC	MC	EC	EC	EC	MC	MC	EC	EC	N/A	N/A
EF	MC	MC	MC	EC	EC	EC	MC	MC	EC	EC	N/A	N/A
CF	MC	MC	MC	EC	EC	EC	MC	MC	EC	EC	N/A	N/A
T	MC	EC	N/A	N/A	N/A	N/A	MC	MC	EC	EC	N/A	N/A
T1	MC	EC	N/A	N/A	N/A	N/A	MC	MC	EC	EC	N/A	N/A
TC	MC	EC	N/A	N/A	N/A	N/A	MC	MC	EC	EC	N/A	N/A

MC MECHANICAL CONTRACTOR
EC ELECTRICAL CONTRACTOR

MECHANICAL & ELECTRICAL ENGINEERING, INC.
PROJECT #16148
SANTA FE:
1222 Luisa St. Suite B
Santa Fe, New Mexico 87505
505/983-2389
ALBUQUERQUE:
8417 Washington Pl., NE
Albuquerque, NM 87113
505/856-1699
P: FP: M: E:

10/20/17
KARL M. TIPTON
NEW MEXICO
21200
PROFESSIONAL ENGINEER

autotroph
architecture.planning.sustainable design consulting

No.	Description	Date

Hwy 14 Senior Center

MECHANICAL LEGEND AND GENERAL NOTES

Project Number	1606
Date	10.20.17
Drawn By	RD
Checked By	KT

M0.1

KEYED NOTES:

1. SEE "ENLARGED MECHANICAL FLOOR PLAN" ON SHEET M4.1 FOR INFORMATION IN THIS LOCATION.

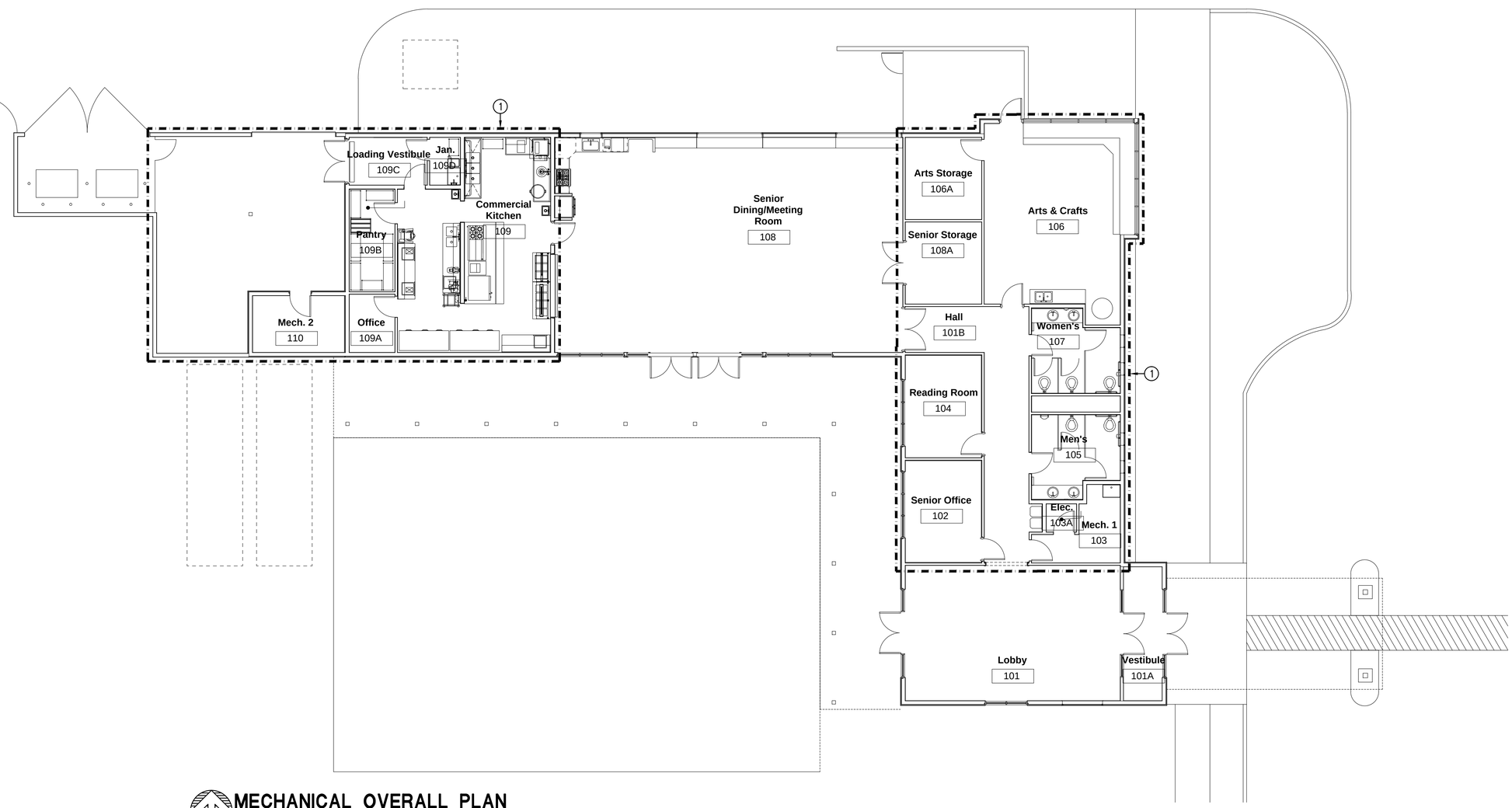

MECHANICAL OVERALL PLAN

SCALE: 1/8" = 1'-0"

MECHANICAL & ELECTRICAL ENGINEERING, INC.
PROJECT #16148

SANTA FE:
1222 Luisa St. Suite B
Santa Fe, New Mexico 87505
505/983-2389

ALBUQUERQUE:
8417 Washington Pl., NE
Albuquerque, NM 87113
505/856-1699

P:	FP:	M:	E:

10/20/17
KARL M. TIPTON
NEW MEXICO
21200
PROFESSIONAL ENGINEER

autotroph
architecture.planning.sustainable design consulting

No.	Description	Date

Hwy 14 Senior Center

MECHANICAL OVERALL PLAN

Project Number	1606
Date	10.20.17
Drawn By	RD
Checked By	KT

M1.1

GENERAL NOTES:

A. ALL CASSETTE TYPE SPLIT SYSTEM UNITS TO BE MOUNTED IN CEILING AT LOCATION SHOW PER MANUFACTURERS RECOMMENDATIONS.

B. MOUNT ALL CONCEALED DUCTED UNITS IN ATTIC SPACE IN LOCATION SHOWN PER MANUFACTURERS RECOMMENDATIONS. PROVIDE ACCESS PANELS AS NECESSARY FOR SERVICE.

C. ALL EXHAUST AIR DUCTS TO BE A MINIMUM OF 10 FT. AWAY FROM OR A MINIMUM OF 3FT. ABOVE ALL OUTDOOR AIR INTAKE DUCTWORK.

D. ALL DUCTWORK TO BE ROUTED AS CLOSE AS POSSIBLE TO PATHWAY SHOWN AND CONCEALED IN CEILING SPACE.

E. INSULATE ALL DUCTWORK WITH A MINIMUM OF R-6 INSULATION. DUCT LINER IS NOT ACCEPTABLE AS A SUBSTITUTE FOR DUCT INSULATION.

F. MAINTAIN MANUFACTURER CLEARANCES ON ALL EQUIPMENT.

G. PROVIDE ACCESS TO ALL EQUIPMENT IN CEILING SPACE.

KEYED NOTES:

1. INSTALL MAKE-UP AIR UNIT IN LOCATION SHOWN PER MANUFACTURES RECOMMENDATIONS. MOUNT EQUIPMENT ON 6 INCH CONCRETE PAD WITH A MINIMUM OF 6 INCHES OVERHANG ON ALL FOUR SIDES.
2. MOUNT OUTDOOR CONDENSING UNIT ON 6 INCH CONCRETE PAD WITH A MINIMUM OF 6 INCHES OVERHANG ON ALL FOUR SIDES. SLOPE CONCRETE FOR DRAINAGE.
3. ROUTE DUCTWORK UP ABOVE CEILING HEIGHT 11'-0" AND ROUTE DUCTWORK IN CEILING SPACE. MOUNT DUCTWORK ON UNISTRUT DUCTWORK SUPPORTS. PLACE BRACING 6 FEET APART AND MOUNTED ON CONCRETE PADS.
4. INSTALL KITCHEN HOOD PER MANUFACTURERS RECOMMENDATIONS. KITCHEN HOOD TO BE ABOVE COOKING EQUIPMENT WITH A MINIMUM OF 6 INCH OVERHANG ON ALL EXPOSED SIDES. KITCHEN HOOD PROVIDED BY KITCHEN EQUIPMENT SUPPLIER.
5. INSTALL KITCHEN HOOD EXHAUST FAN ON MANUFACTURER PROVIDED ROOF CURB AND CONNECT DUCTWORK TO KITCHEN HOOD. PROVIDE HINGED ACCESS ON EXHAUST FAN TO ALLOW INSPECTION OF DUCTWORK.
6. INSTALL DISHWASHER HOOD ABOVE DISHWASHER PER MANUFACTURERS RECOMMENDATIONS. DISHWASHER HOOD PROVIDED BY KITCHEN EQUIPMENT SUPPLIER.
7. INSTALL DISHWASHER HOOD EXHAUST FAN ON WALL PER MANUFACTURES RECOMMENDATIONS. ROUTE AND CONNECT EXHAUST DUCTWORK TO DISHWASHER HOOD.
8. ROUTE OUTSIDE AIR DUCTWORK THROUGH WALL AND TERMINATE WITH WALL CAP PER UMC. FIELD COORDINATE ROUTE PRIOR TO INSTALLATION.
9. MOUNT CEILING FAN IN LOCATION SHOWN AND ROUTE EXHAUST DUCT UP THROUGH ROOF. TERMINATE WITH ROOF CAP PER UMC.
10. INSTALL EXHAUST FAN ON MANUFACTURER PROVIDED ROOF CURB IN LOCATION SHOWN PER MANUFACTURES RECOMMENDATIONS.
11. ROUTE SUPPLY DUCTWORK UP TO BELOW CEILING IN ARTS AND CRAFTS ROOM.
12. THERMOSTAT LOCATED IN SENIOR DINNING/MEETING ROOM TO CONTROL SPLIT SYSTEM UNITS SSU5 AND SSU6. SEE CONTROLS DIAGRAM FOR FURTHER INFORMATION.
13. INSTALL TRANSFER AIR IN LOCATION SHOWN. SEE "TRANSFER AIR GRILLE DETAIL" ON SHEET M5.1 FOR FURTHER INFORMATION.
14. KILN EXHAUST DUCTWORK AND EXHAUST FAN TO BE PROVIDED BY KILN MANUFACTURE.
15. INSTALL BASEBOARD 18 INCHES ABOVE FINISHED FLOOR PER MANUFACTURES RECOMMENDATIONS.
16. PROVIDE ACCESS PANEL AS NECESSARY FOR SERVICE. SEE MECHANICAL SCHEDULE FOR FURTHER INFORMATION.

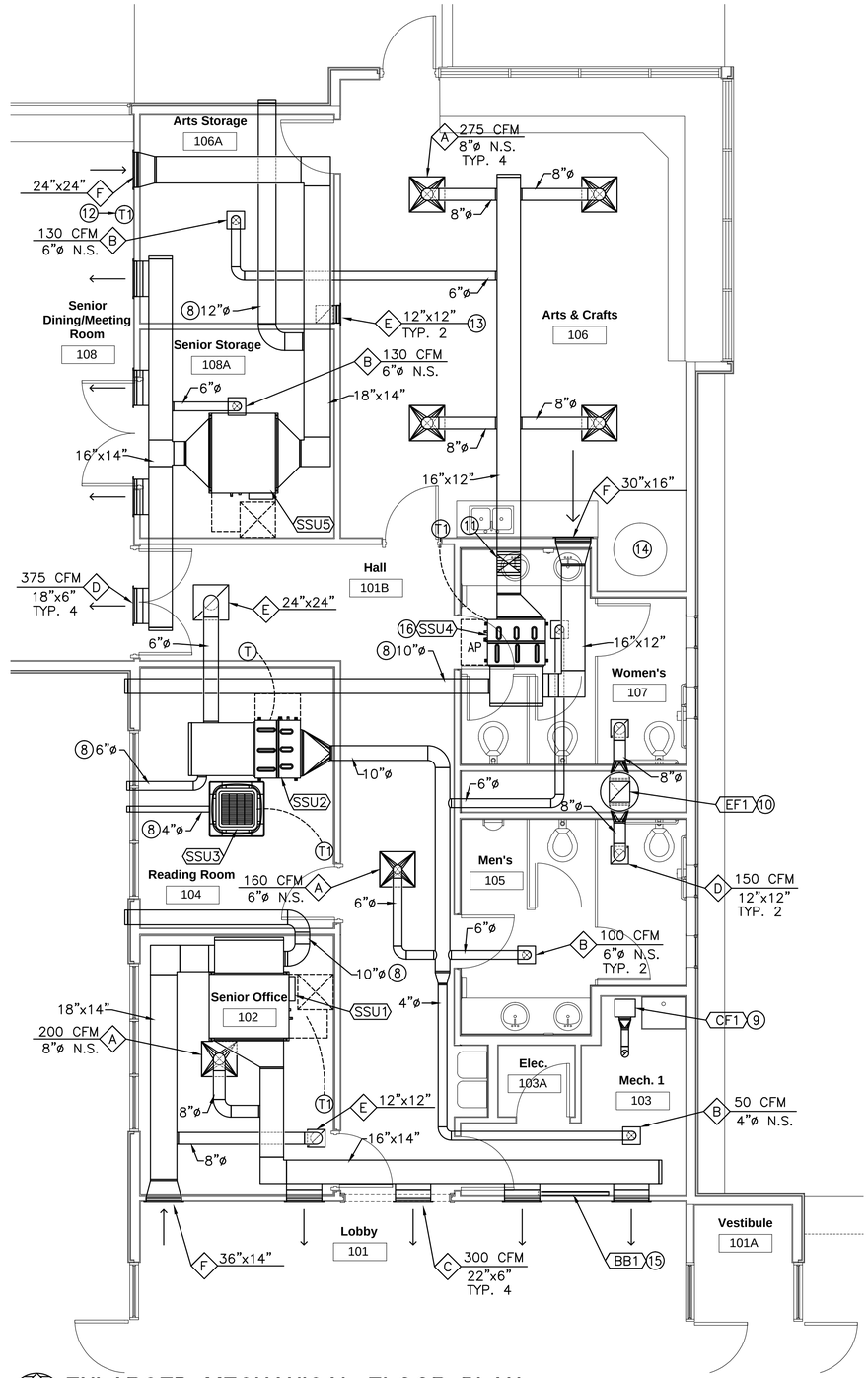

ENLARGED MECHANICAL FLOOR PLAN

SCALE: 1/4" = 1'-0"

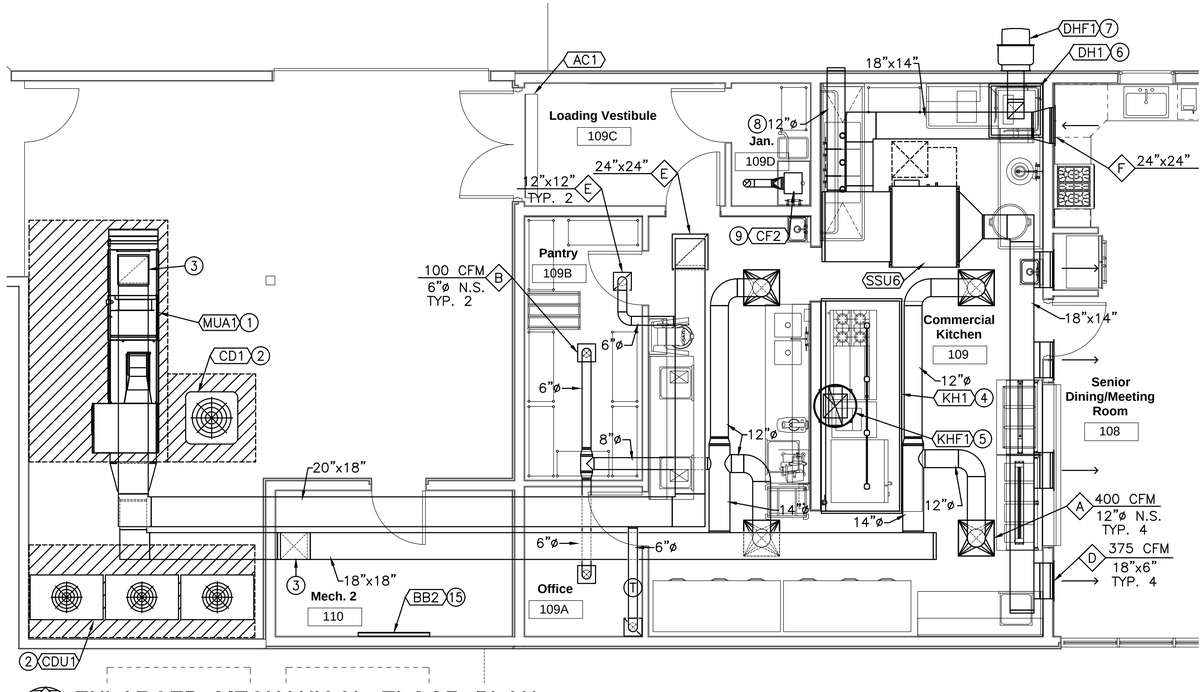

ENLARGED MECHANICAL FLOOR PLAN

SCALE: 1/4" = 1'-0"

MECHANICAL & ELECTRICAL ENGINEERING, INC.
PROJECT #16148

SANTA FE:
1222 Luisa St. Suite B
Santa Fe, New Mexico 87505
505/983-2389

ALBUQUERQUE:
8417 Washington Pl., NE
Albuquerque, NM 87113
505/856-1699

P: | FP: | M: | E:

10/20/17 KARL M. TIPTON NEW MEXICO 21200 PROFESSIONAL ENGINEER

autotroph
architecture.planning.sustainable design consulting

No.	Description	Date

Hwy 14 Senior Center

ENLARGED MECHANICAL FLOOR PLAN

Project Number	1606
Date	10.20.17
Drawn By	RD
Checked By	KT

M4.1

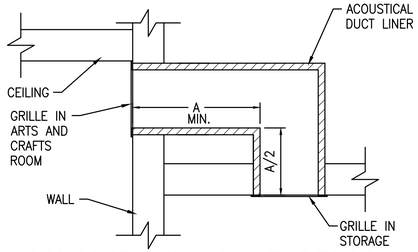

TRANSFER AIR GRILLE DETAIL

SCALE: NOT TO SCALE

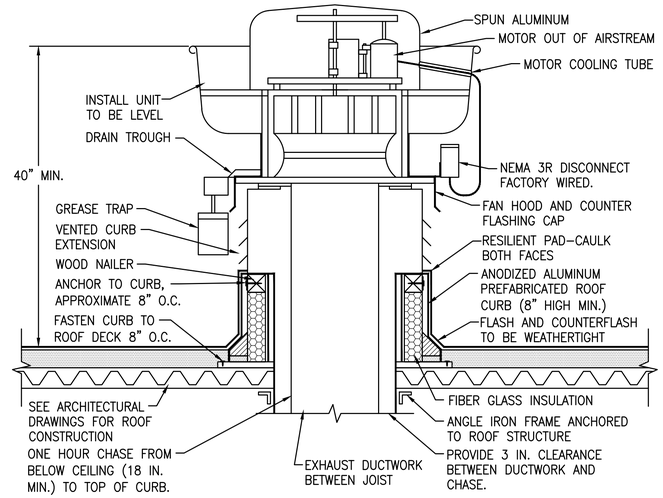

KITCHEN EXHAUST FAN DETAIL

SCALE: NOT TO SCALE

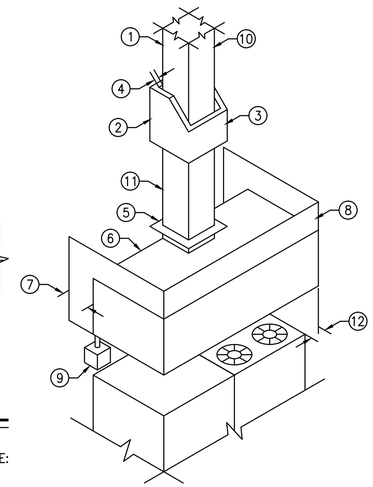

KEYED NOTES:

1. SEAMS TO BE EXTERNALLY WELDED OR BRAZED. PROVIDE CORROSION PROTECTION. SECTION 510.1.7, CHAPTER 6 AND NFPA 96:7.1.7
2. DUCT ENCLOSURE SHALL BE VENTED THROUGH WEATHERPROOF OPENINGS. SECTION 510.5
3. DUCT ENCLOSURES SHALL BE OF A MINIMUM ONE–HOUR FIRE RESISTIVE CONSTRUCTION. REFER TO BUILDING CODE.
4. DUCT TO ENCLOSURE CLEARANCE: MIN. 18 IN. FOR COMBUSTIBLE CONSTRUCTION. 3 IN. FOR LIMITED COMBUSTIBLE CONSTRUCTION. 3IN. FROM NON–COMBUSTIBLE MATERIAL. SECTION 507.2
5. SEAL DUCT ENCLOSURE OPENING AT CEILING OR WALL PENETRATION. REFER TO BUILDING CODE.
6. TYPE ONE HOOD CONSTRUCTION: 20GA. GALVANIZED STEEL, .030IN. STAINLESS STEAL, 24 OZ/SQ. FT.. COPPER OR OTHER APPROVED MATERIALS. SOLDER MAY ONLY BE USED TO SEAL JOINTS. SECTION 508.2.6.
7. PROVIDE 18 IN. CLEARANCE TO COMBUSTIBLE MATERIALS. PROVIDE AT LEAST 3 IN. CLEARANCE TO LIMITED COMBUSTIBLE MATERIALS AND 0 IN. CLEARANCE TO NON COMBUSTIBLE MATERIAL. SECTION 510.2 AND 507.2.
8. PROVIDE SOLID FLASHING FOR HOODS.
9. GREASE FILTERS SHALL BE EQUIPPED WITH A DRIP TRAY BENEATH LOWER EDGES. SECTION 509.2.3.
10. PROVIDE ADEQUATE CLEANOUTS TO SERVE THE ENTIRE DUCT SYSTEM. SECTION 510.3.
11. DUCT SHALL BE IN STALLED TO PREVENT BUILD UP OF GREASE. SECTION 510.5.
12. CANOPY HOODS SHALL EXTEND 6IN. PAST THE COOKING SURFACE ON ALL OPEN SIDES. THE MAXIMUM VERTICAL DISTANCE BETWEEN THE CANOPY LIP AND THE COOKING SURFACE IS 4FT. SECTION 508.4

KITCHEN HOOD AND DUCTWORK ENCLOSURE DETAIL

SCALE: NOT TO SCALE

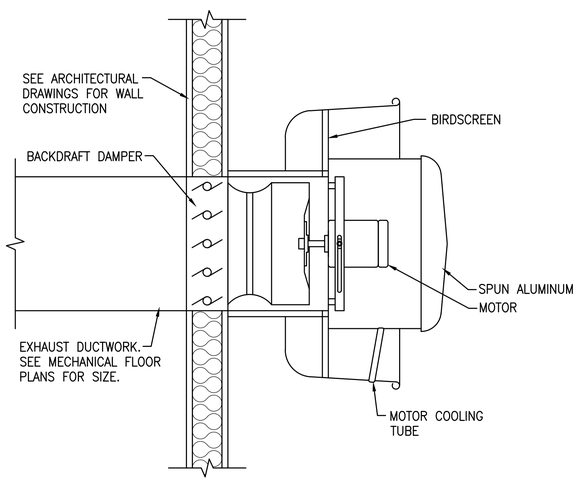

WALL MOUNTED EXHAUST FAN DETAIL

SCALE: NOT TO SCALE

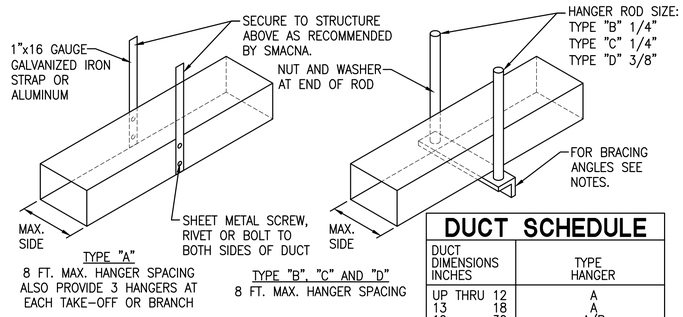

DUCT SCHEDULE

DUCT DIMENSIONS INCHES	TYPE HANGER
UP THRU 12	A
13 18	A
19 30	A/B
31 42	B
43 54	B
55 60	B
61 84	C
85 96	C
OVER 96	D

NOTES:

1. FOR SEVERAL DUCTS ON ONE HANGER TYPE "B"–"C" OR "D" MAY BE USED. SIZE OF HANGER WILL BE SELECTED ON THE SUM OF DUCT WIDTHS EQUAL TO MAX. WIDTH OF DUCT SCHEDULE.
2. SCHEDULE FOR ANGLES FOR BRACING: TYPE "B" 1–1/2"x1–1/2"x1/8" ANGLE MAX. SPACING 8'–0" CENTERS; TYPE "C" 1–1/2"x1–1/2"x3/16" ANGLE MAX. SPACING 8'–0" CENTERS; TYPE "D" 2"x2"x1/4" MAX. SPACING 4'–0" CENTERS.

DUCT HANGERS

SCALE: NOT TO SCALE

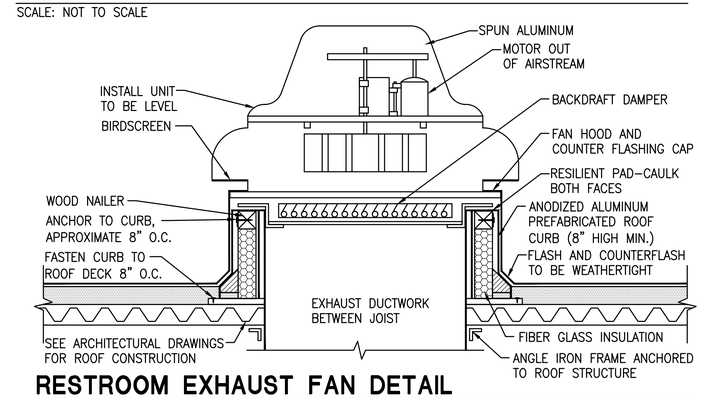

RESTROOM EXHAUST FAN DETAIL

SCALE: NOT TO SCALE

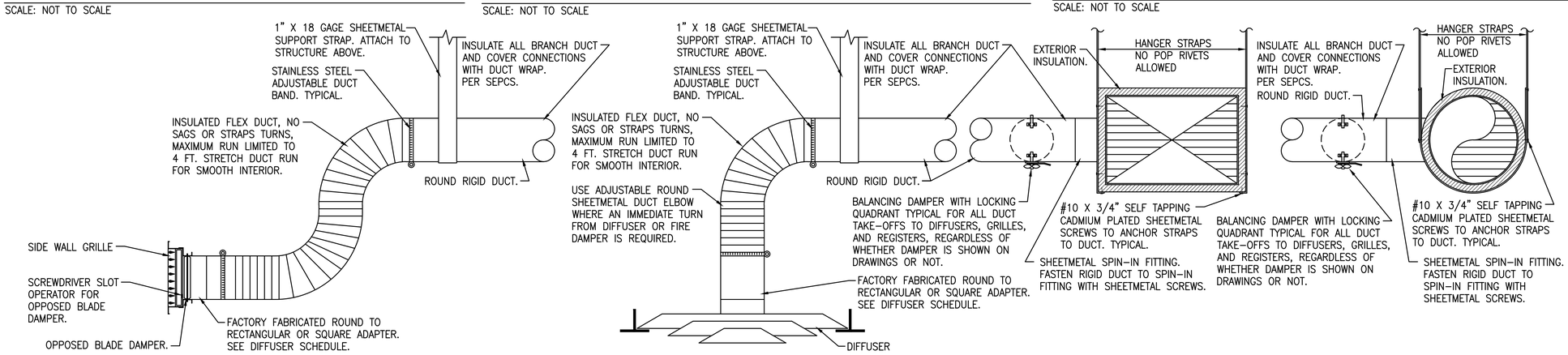

DUCTWORK DIFFUSER AND GRILLE CONNECTION DETAIL

SCALE: NOT TO SCALE

MECHANICAL & ELECTRICAL ENGINEERING, INC.
PROJECT #16148
SANTA FE: 1222 Luisa St. Suite B Santa Fe, New Mexico 87505 505/983–2389
ALBUQUERQUE: 8417 Washington Pl., NE Albuquerque, NM 87113 505/856–1699
P: FP: M: E:

10/20/17 KARL M. TIPTON NEW MEXICO 21200 PROFESSIONAL ENGINEER

autotroph
architecture.planning.sustainable design consulting

No.	Description	Date

Hwy 14 Senior Center

MECHANICAL DETAILS

Project Number	1606
Date	10.20.17
Drawn By	RD
Checked By	KT

M5.1

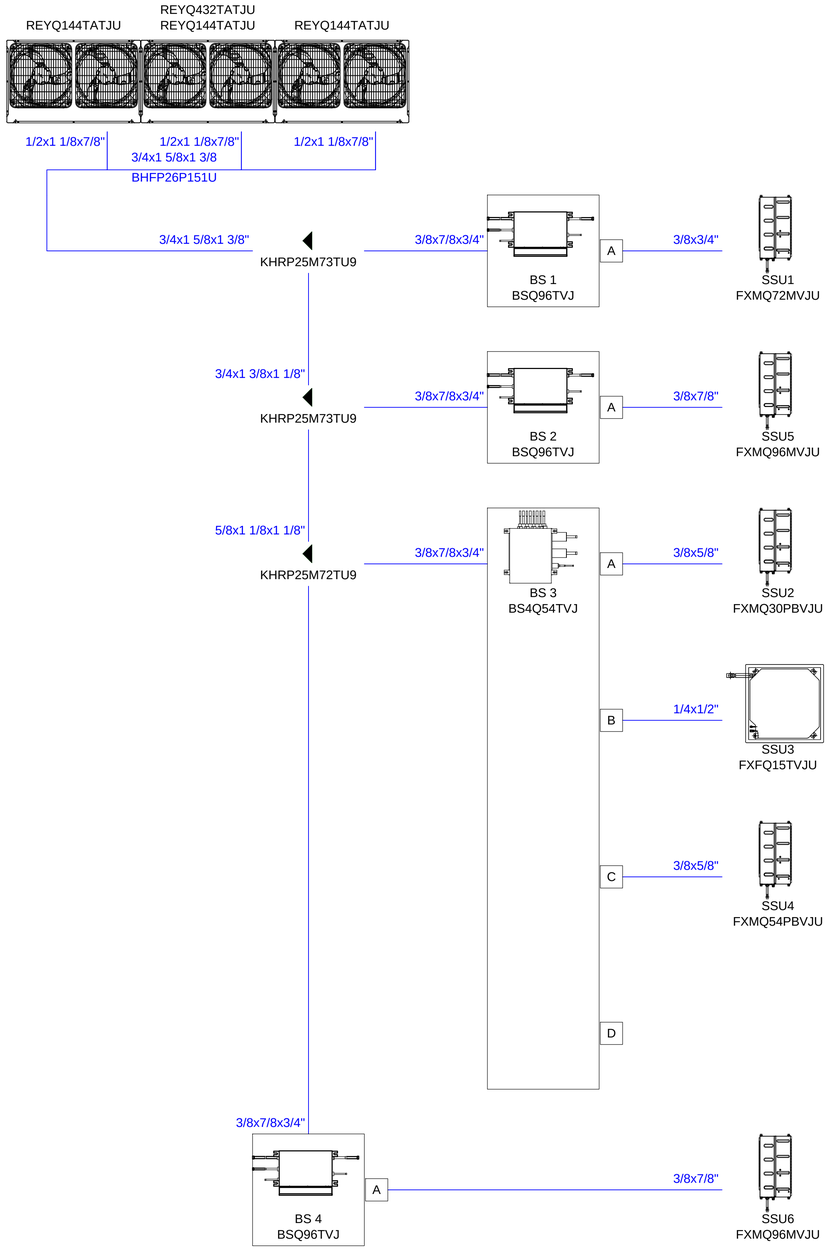

PIPING SCHEMATIC

SCALE: NOT TO SCALE

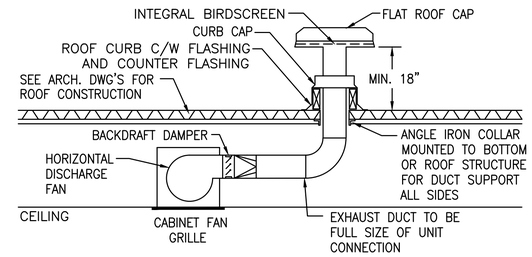

CABINET MOUNTED EXHAUST FAN DETAIL

SCALE: NOT TO SCALE

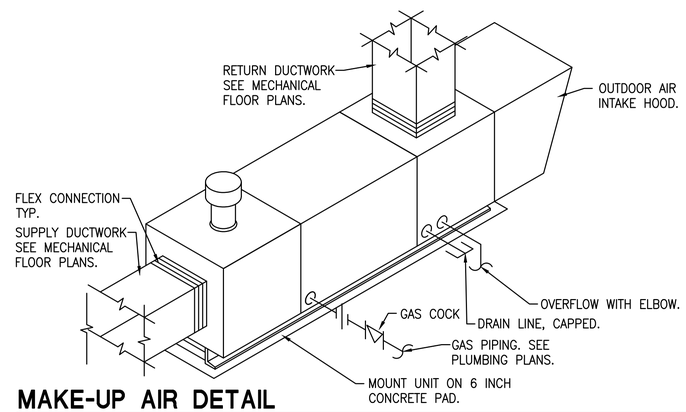

MAKE-UP AIR DETAIL

SCALE: NOT TO SCALE

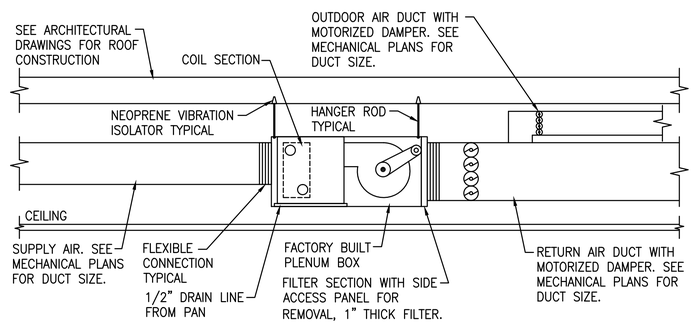

FAN COIL UNIT DETAIL

SCALE: NOT TO SCALE

MECHANICAL & ELECTRICAL ENGINEERING, INC.
PROJECT #16148

SANTA FE:
1222 Luisa St. Suite B
Santa Fe, New Mexico 87505
505/983-2389

ALBUQUERQUE:
8417 Washington Pl., NE
Albuquerque, NM 87113
505/856-1699

P: | FP: | M: | E:

10/20/17
KARL M. TIPTON
NEW MEXICO
21200
PROFESSIONAL ENGINEER

autotroph
architecture.planning.sustainable design consulting

No.	Description	Date

Hwy 14 Senior Center

MECHANICAL DETAILS

Project Number	1606
Date	10.20.17
Drawn By	RD
Checked By	KT

M5.2

MAKE-UP AIR UNIT SEQUENCE OF OPERATION:

RUN CONDITIONS – SCHEDULED:
THE UNIT SHALL RUN ACCORDING TO A USER DEFINABLE TIME SCHEDULE IN THE FOLLOWING MODES:

OCCUPIED MODE: THE UNIT SHALL MAINTAIN

1. A 75°F (ADJ.) COOLING SETPOINT.
2. A 70°F (ADJ.) HEATING SETPOINT.

UNOCCUPIED MODE (NIGHT SETBACK): THE UNIT SHALL MAINTAIN

1. A 85°F (ADJ.) COOLING SETPOINT.
2. A 55°F (ADJ.) HEATING SETPOINT.

SUPPLY FAN:
THE SUPPLY FAN SHALL RUN ANYTIME THE UNIT IS COMMANDED TO RUN. TO PREVENT SHORT CYCLING, THE SUPPLY FAN SHALL HAVE A FACTORY DEFINABLE MINIMUMN RUNTIME, UNLESS SHUTDOWN ON SAFETIES.

1. SUPPLY FAN LOW SPEED: FAN WILL RUN IN LOW SPEED FOR GENERAL SPACE COOLING AND HEATING.
2. SUPPLY FAN HIGH SPEED: FAN WILL RUN IN HIGH SPEED WHEN THE KITCHEN HOOD IS TURNED ON.
3. SUPPLY FAN SHUT DOWN (EMERGENCY SHUTDOWN):
   THE UNIT SHALL SHUT DOWN AND GENERATE AN ALARM UPON RECEIVING AN EMERGENCY SHUTDOWN SIGNAL FROM THE KITCHEN HOOD FIRE SUPPRESSION SYSTEM.

ZONE SETPOINT ADJUST:
THE OCCUPANT SHALL BE ABLE TO ADJUST THE ZONE TEMPERATURE HEATING AND COOLING SETPOINTS AT THE ZONE SENSOR.

FREEZE PROTECTION:
THE UNIT SHALL SHUT DOWN AND GENERATE AN ALARM UPON RECEIVING A FREEZESTAT STATUS.

OUTSIDE AIR DAMPER:
THE OUTSIDE AIR DAMPER SHALL OPEN ANYTIME THE UNIT RUNS AND SHALL CLOSE ANYTIME THE UNIT STOPS. THE SUPPLY FAN SHALL START ONLY AFTER THE DAMPER STATUS HAS PROVEN THE DAMPER IS OPEN. THE OUTSIDE AIR DAMPER SHALL CLOSE 4SEC (ADJ.) AFTER THE SUPPLY FAN STOPS.

1. OUTSIDE AIR DAMPER TO OPEN TO MINIMUM REQUIRED NORMAL OPERATION.
2. OUTSIDE AIR DAMPER TO ADJUST FOR INCREASED AIRFLOW REQUIRED DURING KITCHEN HOOD OPERATION.

RETURN AIR DAMPER:
THE RETURN AIR DAMPER SHALL OPEN ANYTIME THE UNIT RUNS. THE SUPPLY FAN SHALL START ONLY AFTER THE DAMPER STATUS HAS PROVEN THE DAMPER IS OPEN.

1. RETURN AIR DAMPER TO CLOSE DURING KITCHEN HOOD OPERATION.

ALARMS SHALL BE PROVIDED AS FOLLOWS:

1. OUTSIDE AIR DAMPER FAILURE: COMMANDED OPEN, BUT THE STATUS IS CLOSED.
2. OUTSIDE AIR DAMPER HAND: COMMANDED CLOSED, BUT THE STATUS IS OPEN.

GAS HEATING STAGES:
THE CONTROLLER SHALL MEASURE THE ZONE TEMPERATURE AND STAGE THE HEATING TO MAINTAIN ITS HEATING SETPOINT. TO PREVENT SHORT CYCLING, THERE SHALL FACTORY DEFINED DELAY BETWEEN STAGES, AND EACH STAGE SHALL HAVE A FACTORY MINIMUM RUNTIME.

THE HEATING SHALL BE ENABLED WHENEVER:

1. OUTSIDE AIR TEMPERATURE IS LESS THAN 65°F (ADJ.).
2. AND THE ZONE TEMPERATURE IS BELOW HEATING SETPOINT.
3. AND THE FAN STATUS IS ON.

MECHANICAL EQUIPMENT SCHEDULE:

BB1 AND BB2
FLOOR MOUNTED ELECTRIC CONVECTOR HEATER: FLOOR MOUNTED, ADJUSTABLE PEDESTAL LEGS, REMOVABLE FRONT COVER AND THERMAL LIMIT PROTECTION SWITCH. WATTS/FT. HEATING ELEMENT, DISCONNECT SWITCH AND AUTOMATIC THERMAL CUTOUT. INCLUDE BUILT–IN 2 STAGE THERMOSTAT TAMPER RESISTANT, DISCONNECT SWITCH, TRANSFORMER RELAY AND POWER RELAY. PROVIDE MANUFACTURES STANDARD WARRANTEES AND ALL EQUIPMENT NECESSARY FOR COMPLETE INSTALLATION AND OPERATION.
ELEC.: 240V/1PH/60HZ, 4.2 AMPS.
MODEL BY "Q–MARK" MODEL QMKC2544A, 4 FT. LENGTH

EF1
EXHAUSTER: ROOF MOUNTED EXHAUSTER WITH CENTRIFUGAL ADJUSTABLE BELT DRIVEN FAN, SPUN ALUMINUM HOOD, ALUMINUM WHEEL, GALVANIZED STEEL FRAME, VIBRATION ISOLATORS, MOTORS AND DRIVES ISOLATED FROM EXHAUST AIR STREAM, HEAVY DUTY MOTOR WITH PERMANENTLY SEALED BALL BEARINGS, AND DISCONNECT SWITCH. AMCA CERTIFIED AND FAN. INCLUDE ROOF CURB, DAMPERS, MOTOR STARTERS, RELAYS, SWITCHES, AND ALL EQUIPMENT NECESSARY FOR COMPLETE INSTALLATION AND OPERATION.
MODEL BY "GREENHECK"
ELEC.: 115V/1PH/60HZ

SYM	MODEL NO.	CFM	ESP	FAN RPM	HP	FLA	WGHT LBS	OPERATION
EF1	GB–071–6	300	0.3	1725	1/6	4.4	80	TIME CLOCK

CF1–CF2
CEILING EXHAUSTER: EXHAUSTER COMPLETE WITH DISCONNECT, BACKDRAFT DAMPER, WALL OR ROOF CAP, MOUNTING BRACKETS, CEILING GRILLE, AND ALL EQUIPMENT NECESSARY FOR COMPLETE INSTALLATION.
MODEL BY "GREENHECK"
ELEC.: 120V/1PH/60HZ.

SYM	MODEL NO.	CFM	ESP	FAN RPM	WATTS	FLA	WT. LBS.	CONTROL
CF1	SP–B80	50	0.3	900	13.6	0.6	17	SWITCH
CF2	SP–B80	50	0.3	900	13.6	0.6	17	SWITCH

T THERMOSTAT: 24VAC, 7 DAY PROGRAMMABLE COMMERCIAL THERMOSTAT WITH BACKLIT DISPLAY, REAL–TIME CLOCK, HOLIDAY OVERRIDE, HEAT MODE, COOL MODE, AUTO MODE, AND EMERGENCY HEAT MODE. RATED FOR UP TO 2 HEATING/ 2 COOLING STAGES ON CONVENTIONAL SYSTEM AND 3 HEATING/ 2 COOLING STAGES ON HEAT PUMP SYSTEMS. TEMPERATURE SET POINT RANGES OF 40 DEG. F TO 90 DEG. F HEATING AND 50 DEG. F TO 99 DEG. F COOLING. INCLUDE ALL COMPONENTS NECESSARY FOR COMPLETE OPERATION.
MODEL BY "AAON" MODEL NO. R80570

T1 THERMOSTAT: NAVIGATION REMOTE CONTROLLER, 16VDC SUPPLIED BY INDOOR UNIT, PROGRAMMABLE THERMOSTAT WITH BACKLIT LCD DISPLAY, STAND ALONE AND MULTIPLE UNITS GROUP CONTROL, TEMPERATURE SENSOR, DUAL SETPOINTS, REAL–TIME MONITORING, AND AUTOMATIC CHANGEOVER. TEMPERATURE SET POINT RANGES OF 40 DEG. F. TO 95 DEG. F. SETBACK SETPOINT RANGE AND 60 DEG. F. TO 90 DEG. F. COMFORT SETPOINT RANGE. INCLUDE ALL COMPONENTS NECESSARY FOR COMPLETE OPERATION.
MODEL BY "DAIKIN" MODEL NO. BRG1E73

AP ACCESS PANEL: PROVIDE AND INSTALL CEILING ACCESS PANEL, FOR CEILING TYPE IN WOMEN'S RESTROOM, WHERE REQUIRED FOR ACCESS TO CONCEALED DUCTED UNIT. PROVIDE WITH KEY OPERATED CAM LATCH. SIZE: 30 IN. X 30 IN.
MODEL BY "ACUDOR"

AC1 AIR CURTAIN: LOW PROFILE AIR CURTAIN, MEETING FOOD SERVICE STANDARDS, HEALTH DEPARTMENT REQUIREMENTS, AND THEIR OWN CRITERIA, INSECT CONTROL WHEN THE DOOR IS OPEN. AIR VOLUME 1188 CFM, POWER RATING 0.32 KW, AND 38 LBS. AIR CURTAIN MUST BE INSTALLED SO AIR STREAM IS NOT OBSTRUCTED.
MODEL BY "BERNER" MODEL NO. SLC07–1042A

DIFFUSER, REGISTER, AND GRILLE SCHEDULE:

A SUPPLY AIR DIFFUSER: 24 IN. X 24 IN. PANEL SIZE, ALUMINUM MATERIAL, SQUARE CEILING MOUNTED SUPPLY AIR DIFFUSER WITH TRUE 360 DEG. PATTERN. INCLUDE OBD AND DAMPER IN DUCT. DUCT SIZE AS SHOWN ON DRAWINGS.
"TITUS" MODEL TMS–AA.

B SUPPLY AIR DIFFUSER: 12 IN. X 12 IN. PANEL SIZE, ALUMINUM MATERIAL, SQUARE CEILING MOUNTED SUPPLY AIR DIFFUSER WITH TRUE 360 DEG. PATTERN. INCLUDE OBD AND DAMPER IN DUCT. DUCT SIZE AS SHOWN ON DRAWINGS.
"TITUS" MODEL TMS–AA.

C DOUBLE DEFLECTION SUPPLY GRILLE: RECTANGULAR FACE WITH DOUBLE DEFLECTION BLADES 3/4 IN. SPACING, VERTICAL TO THE FRONT, STANDARD WHITE FINISH, AND OBD. PROVIDE FRAME FOR WALL APPLICATION INDICATED IN ARCHITECTURAL DRAWINGS. DUCT SIZE AS SHOWN ON DRAWINGS.
"TITUS" MODEL 300FL.

D DRUM DIFFUSERS: EXTRUDED ALUMINUM, ROTATING DRUM, PIVOTING BLADES, FELT SEAL, SPONGE RUBBER GASKETS, OBD, AND FRAME FOR CEILING TYPE INDICATED IN ARCHITECTURAL DRAWINGS. SIZE AS INDICATED ON DRAWINGS.
"TITUS" MODEL DL.

E RETURN AIR GRILLE: FABRICATED ALUMINUM GRILLE WITH 1/2 IN.X 1/2 IN.X 1/2 IN. SQUARES. INCLUDE FRAME FOR CORRECT CEILING INSTALLATION. COORDINATE WITH ARCHITECTURAL DRAWINGS FOR CEILING APPLICATION. COLOR SELECTED BY ARCHITECT. SIZE AS SHOWN ON DRAWINGS.
"TITUS" MODEL 50F.

F SINGLE DEFLECTION RETURN GRILLE: 35 DEGREE DEFLECTION, 3/4 INCH SPACING, ALUMINUM CONSTRUCTION, AND HORIZONTAL BLADES. STANDARD WHITE FINISH. GRILLE SIZE AS SHOWN ON DRAWINGS.
"TITUS" MODEL 350FL.

SSU1–SSU6 AND CDU1
SPLIT SYSTEM: VARIABLE CAPACITY, AIR CONDITIONING SYSTEM WITH MULTIPLE EVAPORATORS, REFNET JOINTS, HEADERS, A TWO–PIPE REFRIGERATION DISTRIBUTION SYSTEM USING PID CONTROL, AND OUTDOOR UNIT. THE OUTDOOR UNIT IS A DIRECT EXPANSION (DX), AIR–COOLED HEAT PUMP, MULTI–ZONE AIR–CONDITIONING SYSTEM WITH VARIABLE SPEED DRIVEN COMPRESSORS USING R–410A REFRIGERANT. PROVIDE ALL COMPONENTS FOR COMPLETE OPERATION AND UNIT TO BE RATED FOR 7,200 FT. OPERATION.
MODEL BY "DAIKIN"

INDOOR UNIT DETAILS:
ELEC.: 208V/1PH/60HZ

SYM	MODEL NO.	TC MBH	HC MBH	MCA	CFM	OA CFM
SSU1	FXMQ72MVJU	36	61	9.0	1400	290
SSU2	FXMQ30PMVJU	24	25	2.8	410	125
SSU3	FXFQ15TVJU	10	12.7	0.4	350	105
SSU4	FXMQ54PBVJU	30	46	3.4	1230	370
SSU5	FXMQ96PBVJU	70	81	10.1	1630	490
SSU6	FXMQ96PBVJU	70	81	10.1	1500	450

OUTDOOR UNIT DETAILS:
ELEC.: 230V/3PH/60HZ

SYM	MODEL NO.	CLG MBH	HTG MBH	MCA	WGHT LBS.
CDU1	REY432TTJU	210	310		
	REYQ144TTJU			55	780
	REYQ144TTJU			55	780
	REYQ144TTJU			55	780

NOTE: THE SYSTEM MUST BE INSTALLED BY A FACTORY TRAINED CONTRACTOR/DEALER. THE BIDDERS SHALL BE REQUIRED TO SUBMIT TRAINING CERTIFICATION PROOF WITH BID DOCUMENTS. THE MECHANICAL CONTRACTOR'S INSTALLATION PRICE SHALL BE BASED ON THE SYSTEMS INSTALLATION REQUIREMENTS. THE MECHANICAL CONTRACTOR BIDS WITH COMPLETE KNOWLEDGE OF THE HVAC SYSTEM REQUIREMENTS.

MUA1
MAKE UP AIR UNIT: FILTERED MAKEUP AIR UNIT WITH BELT DRIVEN DOUBLE WIDTH/DOUBLE INLET, FORWARD CURVED CENTRIFUGAL SUPPLY FAN. SPLIT–SYSTEM DX COOLING (CONDENSER CD1), NATURAL GAS INDIRECT FIRED BURNER, STAINLESS STEEL HEAT EXCHANGER, ORIFICE FOR 7,200 FT. ASL. MOTORS SHALL BE PERMANENTLY LUBRICATED, HEAVY DUTY, BALL BEARING TYPE. FAN WHEEL TO BE FORWARD CURVED TYPE, CONSTRUCTED OF HEAVY GAUGE STEEL AND STATICALLY AND DYNAMICALLY BALANCED. HOUSING TO BE CONSTRUCTED OF HEAVY GAUGE GALVANIZED STEEL WITH REMOVABLE PANELS FOR ACCESS TO FAN AND TEMPERING UNIT COMPONENTS, FILTERS AND CONTROLS. FILTERS TO BE ONE INCH ALUMINUM MESH AND U.L. CLASSIFIED. INCLUDE PREWIRED CONTROL CENTER, FREEZE PROTECTION, DUCT ADAPTER, EQUIPMENT SUPPORTS, DIRTY FILTER SWITCH, MOTORIZED INTAKE DAMPER, WEATHER HOOD AND BIRD SCREEN. PROVIDE HORIZONTAL VENTING WITH CONCENTRIC VENT KIT ON ALL INDOOR UNITS. (BALANCE UNIT WITH HOOD OPERATION).
MODEL BY "GREENHECK"
ELEC.: 208V/3Ph/60Hz

SYM	MODEL NO.	LOW CFM	HIGH CFM	FAN ESP	RPM	MCA	HTG IN MBH	CLG OUT MBH	WGT. LBS.
MUA1	IGX–109–H12	1600	2700	0.75	1725	10.8	75.1	32.0	1272

KH1
KITCHEN EXHAUST HOOD: MODEL BY KITCHEN EQUIPMENT SUPPLIER

KHF1
KITCHEN EXHAUST VENTILATORS: KITCHEN HOOD UPBLAST ROOF MOUNTED EXHAUSTER WITH CENTRIFUGAL ADJUSTABLE BELT DRIVEN FAN, MOTORS AND DRIVES ISOLATED FROM EXHAUST AIR STREAM, HEAVY DUTY MOTOR WITH PERMANENTLY SEALED BALL BEARINGS, SPUN ALUMINUM HOOD, ALUMINUM FAN, VIBRATION ISOLATORS, DISCONNECT SWITCH, AND AMCA CERTIFIED. INCLUDE VENTED ROOF CURB, GREASE TRAP KIT, BIRD SCREEN, DAMPERS, MOTOR STARTERS, RELAYS, SWITCHES, AND ALL EQUIPMENT NECESSARY FOR COMPLETE INSTALLATION AND OPERATION INTERCONNECT WITH KITCHEN HOOD
MODEL BY "GREENHECK"
ELEC.: 208V/3PH/60HZ

SYM	MODEL NO.	CFM	ESP	RPM	HP	FLA	WGT. LBS.	OPERATION
KHF1	CUBE–161–7	2700	0.8	1295	3/4	3.5	145	KH1

DH1
DISHWASHER HOOD: MODEL BY KITCHEN EQUIPMENT SUPPLIER

DHF1
DISHWASHER EXHAUST FAN: KITCHEN HOOD WALL MOUNTED EXHAUSTER WITH CENTRIFUGAL ADJUSTABLE BELT DRIVEN FAN, MOTORS AND DRIVES ISOLATED FROM EXHAUST AIR STREAM, HEAVY DUTY MOTOR WITH PERMANENTLY SEALED BALL BEARINGS, SPUN ALUMINUM HOOD, ALUMINUM FAN, VIBRATION ISOLATORS, DISCONNECT SWITCH, AND AMCA CERTIFIED. INCLUDE VENTED ROOF CURB, CONDENSATE DRAIN, BIRD SCREEN, DAMPERS, MOTOR STARTERS, RELAYS, SWITCHES, AND ALL EQUIPMENT NECESSARY FOR COMPLETE INSTALLATION AND OPERATION WITH DISHWASHER HOOD.
MODEL BY "GREENHECK"
ELEC.: 208V/1PH/60HZ

SYM	MODEL NO.	CFM	ESP	RPM	HP	FLA	WGT. LBS.	OPERATION
DHF1	CWB–099–4450	0.3	1041	1/4	3.2	62	DH	

MECHANICAL & ELECTRICAL ENGINEERING, INC.
PROJECT #16148
SANTA FE: 1222 Luisa St. Suite B, Santa Fe, New Mexico 87505, 505/983–2389
ALBUQUERQUE: 8417 Washington Pl., NE, Albuquerque, NM 87113, 505/856–1699
P: FP: M: E:

10/20/17 KARL M. TIPTON NEW MEXICO 21200 PROFESSIONAL ENGINEER

autotroph
architecture.planning.sustainable design consulting

No.	Description	Date

Hwy 14 Senior Center

MECHANICAL SCHEDULE

Project Number	1606
Date	10.20.17
Drawn By	RD
Checked By	KT

M6.1

FIRE PROTECTION LEGEND

	PRE-ACTION SPRINKLER VALVE RISER
	FIRE SPRINKLER PIPING
	PIPING UP
	PIPING DOWN
	CONCEALED SPRINKLER DRY TYPE QUICK RESPONSE – STANDARD COVERAGE
	UPRIGHT SPRINKLER DRY TYPE WITH GUARD QUICK RESPONSE – STANDARD COVERAGE
	SIDEWALL SPRINKLER DRY TYPE WITH GUARD QUICK RESPONSE – STANDARD COVERAGE

NOTE: THIS SYMBOLS LEGEND IS A GENERAL REPRESENTATION OF ITEMS USED. SOME PROJECTS MAY NOT UTILIZE ALL SYMBOLS REPRESENTED. COORDINATE ALL SYMBOLS FROM PLANS.

M&E ENGINEERING, INC.
FIRE PROTECTION DESIGN CRITERIA

A	AVAILABLE WATER SUPPLY*	
	STATIC PRESSURE:	1 PSI
	RESIDUAL PRESSURE:	2 PSI WITH 650 GPM FLOWING
	SOURCE:	3
B	AUTHORITY HAVING JURISDICTION:	SFCO
C	NFPA STANDARD(S):	13
D	OCCUPANCY CLASSIFICATION:	A-2/B/S-2
E	MINIMUM DESIGN DENSITY; GPM/SF	SEE CIVIL DRAWINGS
F	MAXIMUM SPRINKLER COVERAGE; SF	*
G	TYPE OF SYSTEM:	WET
H	INSURANCE AUTHORITY:	N/A
I	ADDITIONAL INFO:	*

* VERIFY WITH FLOW TEST

GENERAL NOTES:

A. THIS SET OF DOCUMENTS, INCLUDING DRAWINGS AND SPECIFICATIONS, PRESENTS THE PRELIMINARY ENGINEERING AND PERFORMANCE REQUIREMENTS FOR THE FIRE PROTECTION SYSTEM. THE SUCCESSFUL BIDDER WILL MEET WITH THE PROJECT ENGINEER AND AFTER DEVELOPING AN UNDERSTANDING OF THE ENGINEER'S DESIGN INTENT WILL PREPARE SHOP DRAWINGS FOR THE CONSTRUCTION OF THE PROJECT.

B. ALL QUESTIONS, SUGGESTIONS, PROPOSED REVISIONS, CODE ISSUES, AND OTHER ISSUES SHALL BE BROUGHT TO THE ATTENTION OF THE PROJECT ENGINEER DURING THE BID PERIOD. BY PLACING A BID, A BIDDER ASSURES THAT ALL CONCERNS WITH THE ENGINEER HAVE BEEN RESOLVED AND THAT THE BID REFLECTS THE COST OF A CODE-COMPLYING SYSTEM.

REFER TO FIRE PROTECTION CRITERIA BLOCK ON DRAWINGS FOR:
WATER SUPPLY INFORMATION
TYPE OF SPRINKLER SYSTEM, DRY, WET, PRE-ACTION, ETC.
OCCUPANCY HAZARD CLASSIFICATION
AREA TO BE SPRINKLED
GOVERNING NFPA CODE
AUTHORITY HAVING JURISDICTION
OTHER GOVERNING INFORMATION

C. PROVIDE AND INSTALL A COMPLETE AUTOMATIC FIRE PROTECTION SPRINKLER SYSTEM IN THE AREAS IDENTIFIED IN THE CRITERIA BLOCK. THERE ARE TWO GENERAL AREAS OF WORK; NEW CONSTRUCTION, AND REMODELED EXISTING CONSTRUCTION.

D. INSTALL SPRINKLERS ABOVE (WHERE REQUIRED) AND BELOW CEILINGS. IN AREAS WITH CEILINGS, CONCEAL ALL PIPING. WHEN PIPING IS EXPOSED, PAINT ALL PIPE, FITTINGS AND HANGERS. OBTAIN PAINT COLOR FROM GENERAL CONTRACTOR. RUN ALL EXPOSED PIPING AS HIGH AS POSSIBLE AND COORDINATE WITH STRUCTURE, DUCTWORK, ROOF OPENINGS, AND LIGHTING. PIPING TO BE AS INCONSPICUOUS AS POSSIBLE.

E. PROVIDE SPRINKLER GUARD FOR EXPOSED SPRINKLER HEADS WHERE MECHANICAL DAMAGE MAY OCCUR OR AS NOTED ON THE DRAWINGS.

F. INSTALL SYSTEM PER OCCUPANCY HAZARD INDICATED IN CRITERIA BLOCK.

G. COMPLETE SHOP DRAWINGS AND INSTALLATION IN CONFORMANCE WITH THE LATEST EDITIONS OF NFPA 13, NFPA 101, UNIFORM FIRE CODE, UBC, UPC, UMC, LIFE SAFETY CODES, AND ANY OTHER ORDINANCES THAT APPLY WHETHER SHOWN OR NOT ON THE DRAWINGS OR IN SPECIFICATIONS. WHERE THERE IS A DISCREPANCY AMONG OR BETWEEN THE CODES OR ORDINANCES, BRING THIS TO THE ATTENTION OF THE PROJECT ENGINEER AND THEN PERFORM THE WORK IN ACCORDANCE WITH THE MORE STRINGENT.

H. COORDINATE ALL WORK WITH OTHER TRADES PRIOR TO ANY PIPING INSTALLATION. PERFORM ANY WORK, INCLUDING RELOCATION OF SPRINKLER PIPING, ETC. RESULTING FROM FAILURE TO PROPERLY COORDINATE WITH OTHER TRADES AT NO COST TO OWNER OR ARCHITECT/ENGINEER. PERFORM WORK AS DIRECTED BY GENERAL CONTRACTOR.

I. PREPARE SHOP DRAWINGS AND REVIEW THEM WITH THE PROJECT ENGINEER PRIOR TO SUBMISSION TO AUTHORITY HAVING JURISDICTION AND ARCHITECT/ENGINEER FOR APPROVAL. OBTAIN ALL REQUIRED APPROVALS BEFORE ORDERING MATERIALS OR BEGINNING FABRICATION. SUBMIT A COMPLETE SET OF SHOP DRAWINGS AND HYDRAULIC CALCULATIONS IN ACCORDANCE WITH NFPA-13 AND ANY OTHER APPLICABLE CODES. INCLUDE IN THE SUBMITTAL:

1. SHOP DRAWINGS SHOWING ALL SPRINKLER HEADS, TYPES OF HEADS, LOCATION, SPACING, MAIN AND BRANCH PIPING, PIPE SIZES, HYDRAULIC CALCULATIONS, ZONING (IF APPLICABLE), VALVES, FLOW SWITCHES, AND ANY OTHER REQUIRED ITEMS IN ACCORDANCE WITH NFPA-13, ALONG WITH ANY OTHER APPLICABLE CODES.

2. SHOP DRAWINGS INDICATING ALL DUCTWORK, DIFFUSER LOCATIONS, LIGHTS, BUS DUCTS, AND OTHER PIPING MAINS, ETC., REQUIRING COORDINATION WITH SPRINKLER MAINS, BRANCHES AND HEADS, ETC. COORDINATE LOCATIONS OF FLOW SWITCHES WITH ELECTRICAL CONTRACTOR AND INCLUDE COSTS FOR ALL REQUIRED ELECTRICAL CONNECTIONS FROM THESE FLOW SWITCHES BACK TO MAIN FIRE ALARM PANEL IN THE FIRE PROTECTION BID.

J. WHEN NOT INDICATED IN THE CRITERIA BLOCK, INVESTIGATE AND DETERMINE AVAILABLE WATER PRESSURES AND FLOWS AT THE HYDRANT AT THE SOUTHWEST CORNER OF THE BUILDING FOR PURPOSES OF PERFORMING HYDRAULIC CALCULATIONS. WHEN FLOWS AND PRESSURES ARE INDICATED IN CRITERIA BLOCK, PERFORM ANY AND ALL INVESTIGATION NECESSARY TO CONFIRM INFORMATION IN CRITERIA BLOCK PRIOR TO COMMENCING WORK.

K. PROTECT ALL PIPE PENETRATIONS OF FIRE-RATED WALLS AND FLOORS WITH APPROVED FIRE STOPPING ASSEMBLIES AS MANUFACTURED BY 3M INDUSTRY OR APPROVED EQUAL.

L. PROVIDE AND INSTALL ASSEMBLIES IN CONFORMANCE WITH THE LATEST APPLICABLE CODES, NFPA-13, AND OWNER INSURANCE. PROVIDE U.L. LISTED ASSEMBLIES AND INCLUDE ALL ASSEMBLIES AND COMPONENTS IN FIRE PROTECTION SUBMITTAL.

M. PROVIDE AND INSTALL RELIEF VALVE NOT LESS THAN 1/2 INCH IN SIZE AND SET TO OPERATE AT 175 PSI OR 10 PSI IN EXCESS OF MAXIMUM SYSTEM PRESSURE, WHICHEVER IS GREATER.

N. FIRE ALARM SYSTEM AND FIRE SPRINKLER SYSTEM SHOP DRAWINGS WILL BE SUBMITTED TO FIRE MARSHALS OFFICE FOR APPROVAL.

O. SHOP DRAWINGS WILL BE SUBMITTED TO THE FIRE MARSHAL'S OFFICE FOR REVIEW AND APPROVAL OF ANY INSTALLATION OR MODIFICATION TO THE FIRE SPRINKLER SYSTEM, FIRE ALARM SYSTEM, KITCHEN SUPPRESSION SYSTEM, OR ANY OTHER FIRE RELATED SYSTEM.

P. THE FIRE SPRINKLER SYSTEM WILL BE SUPERVISED WHEN REQUIRED BY THE 2009 INTERNATIONAL FIRE CODE.

FIRE SPRINKLER DESIGN DISCLAIMER:

THIS SET OF DOCUMENTS CONTAINS CALCULATIONS, DRAWINGS AND SPECIFICATIONS PRESENTING THE PRELIMINARY ENGINEERING AND PERFORMANCE REQUIREMENTS FOR THE FIRE PROTECTION SYSTEM. THE SUCCESSFUL BIDDER IS REQUIRED TO PREPARE SHOP DRAWINGS STAMPED AND AUTHORIZED BY A LICENSED ENGINEER IN GOOD STANDING, AND IN CONFORMANCE WITH THE LATEST EDITIONS OF NFPA 13, NFPA 101, UNIFORM FIRE CODE, UBC, UPC, UMC, LIFE SAFETY CODES, AND ANY OTHER ORDINANCES THAT APPLY WHETHER SHOWN OR NOT ON THE DRAWINGS OR DESCRIBED IN SPECIFICATIONS. THE SHOP DRAWINGS WILL BE SUBMITTED TO THE AUTHORITY HAVING JURISDICTION FOR APPROVAL.

MECHANICAL & ELECTRICAL ENGINEERING, INC.
PROJECT #16148

SANTA FE:
1222 Luisa St. Suite B
Sonta Fe, New Mexico 87505
505/983-2389

ALBUQUERQUE:
8417 Washington Pl., NE
Albuquerque, NM 87113
505/856-1699

P: | FP: | M: | E:

autotroph
architecture.planning.sustainable design consulting

No.	Description	Date

Hwy 14 Senior Center

FIRE PROTECTION LEGEND AND GENERAL NOTES

Project Number	1606
Date	10.20.17
Drawn By	RD
Checked By	KT

FP0.1

KEYED NOTES:

1. INSTALL NEW DOUBLE CHECK VALVE BACK FLOW PREVENTER. SEE FIRE PROTECTION EQUIPMENT LIST. PROVIDE THRUST BLOCKING AS REQUIRED.
2. EXTEND NEW 4 INCH FIRE SPRINKLER WATER LINE TO WATER UTILITY. SEE CIVIL PLANS FOR CONTINUATION.
3. INSTALL NEW FIRE DEPARTMENT CONNECTION. FIELD VERIFY EXACT LOCATION WITH OWNER AND AUTHORITY HAVING JURISDICTION PRIOR TO COMMENCING WORK. INSTALL BOLLARDS ON DRIVEWAY SIDE OF THE FDC.
4. INSTALL NEW FIRE SPRINKLER RISER EQUIPMENT AT THIS LOCATION.
5. INSTALL NEW SIDEWALL SPRINKLER HEAD UNDER PORTAL AND SIZE PIPING AS SHOWN.

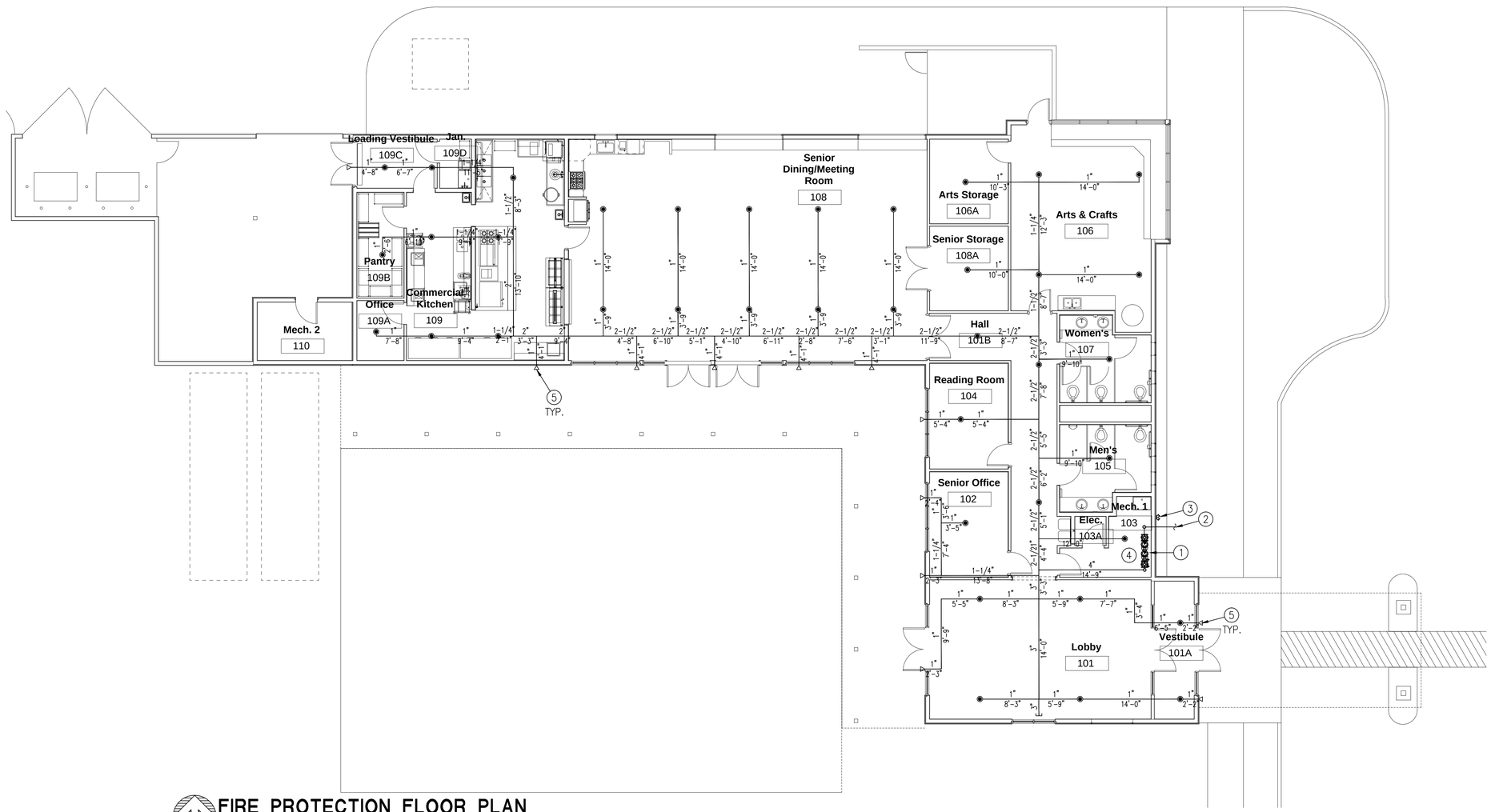

FIRE PROTECTION FLOOR PLAN

SCALE: 1/8" = 1'-0"

FIRE SPRINKLER DESIGN DISCLAIMER:

THIS SET OF DOCUMENTS CONTAINS CALCULATIONS, DRAWINGS AND SPECIFICATIONS PRESENTING THE PRELIMINARY ENGINEERING AND PERFORMANCE REQUIREMENTS FOR THE FIRE PROTECTION SYSTEM. THE SUCCESSFUL BIDDER IS REQUIRED TO PREPARE SHOP DRAWINGS STAMPED AND AUTHORIZED BY A LICENSED ENGINEER IN GOOD STANDING, AND IN CONFORMANCE WITH THE LATEST EDITIONS OF NFPA 13, NFPA 101, UNIFORM FIRE CODE, UBC, UPC, UMC, LIFE SAFETY CODES, AND ANY OTHER ORDINANCES THAT APPLY WHETHER SHOWN OR NOT ON THE DRAWINGS OR DESCRIBED IN SPECIFICATIONS. THE SHOP DRAWINGS WILL BE SUBMITTED TO THE AUTHORITY HAVING JURISDICTION FOR APPROVAL.

MECHANICAL & ELECTRICAL ENGINEERING, INC.
PROJECT #16148
SANTA FE:
1222 Luisa St. Suite B
Santa Fe, New Mexico 87505
505/983-2389
ALBUQUERQUE:
8417 Washington Pl., NE
Albuquerque, NM 87113
505/856-1699

P: | FP: | M: | E:

autotroph
architecture.planning.sustainable design consulting

No.	Description	Date

Hwy 14 Senior Center

FIRE PROTECTION FLOOR PLAN

Project Number	1606
Date	10.20.17
Drawn By	RD
Checked By	KT

FP1.1

PLUMBING LEGEND

CO	CLEANOUT TO GRADE
GW	SANITARY SEWER – GREASE WASTE
SW	SANITARY SEWER – WASTE
DCO	DOUBLE CLEANOUT TO GRADE
C	CONDENSATE DRAIN PIPING
	VENT PIPING
VTR	VENT THROUGH ROOF
RO	REVERSE OSMOSIS COLD WATER PIPING
CW	COLD WATER PIPING
SW	COLD SOFT WATER PIPING
T	TEMPERED HOT WATER PIPING
HW	UN–TEMPERED HOT WATER PIPING
HWR	HOT WATER RECIRCULATING PIPING
LPG	LIQUID PROPANE GAS
ESS	EXISTING SANITARY SEWER PIPING
ECW	EXISTING COLD WATER PIPING
ENG	EXISTING NATURAL GAS PIPING
FD	FLOOR DRAIN
TP	TRAP PRIMER
WHA	WATER HAMMER ARRESTOR
	ROOF DRAIN
	POINT OF CONNECTION
WCO	WALL CLEANOUT
FCO	FINISHED FLOOR CLEANOUT

NOTE: THIS SYMBOLS LEGEND IS A GENERAL REPRESENTATION OF ITEMS USED. SOME PROJECTS MAY NOT UTILIZE ALL SYMBOLS REPRESENTED. COORDINATE ALL SYMBOLS FROM PLANS.

PLUMBING GENERAL NOTES:

A. COMPLETE ALL WORK IN FULL COMPLIANCE WITH THE U.P.C., U.M.C., I.B.C., LIFE SAFETY CODE, N.F.P.A., ADA, AND ALL LOCAL CODES AND ORDINANCES.

B. THE CONTRACTOR SHALL BE RESPONSIBLE FOR THE COMPLETE LAYOUT AND INSTALLATION OF THE PLUMBING SYSTEMS INCLUDING ALL COORDINATION WITH NEW AND EXISTING SERVICES, MECHANICAL EQUIPMENT, ELECTRICAL EQUIPMENT, CONDUIT, CEILING, AND ANY OTHER EQUIPMENT THAT MAY REQUIRE COORDINATION EFFORTS. THE CONTRACTOR SHALL ALSO BE RESPONSIBLE FOR COORDINATION OF TEMPORARY CUT–OFF OF WATER, SEWER AND NATURAL GAS WITH OWNER AND FOR ALL NECESSARY TRENCHING, BACKFILLING, CUTTING, PATCHING, REPAIRING, ETC., ASSOCIATED WITH THE INSTALLATION OF THE PLUMBING SYSTEM SHOWN ON THE PLANS AND DESCRIBED IN THE SPECIFICATIONS. THE CONTRACTOR IS RESPONSIBLE FOR COORDINATING THE INSTALLATION OF THE FIXTURES WITH THE LOCAL CODE REQUIREMENTS FOR HANDICAP ACCESSIBILITY.

C. VERIFY INVERTS BEFORE ROUTING ANY AND ALL PIPING. NO COMPENSATION WILL BE MADE FOR CONTRACTOR'S FAILURE TO COORDINATE WORK WITH GENERAL CONTRACTOR AND OWNER, AND TO TOTALLY FAMILIARIZE HIMSELF WITH ALL CONSTRAINTS AND LIMITATIONS OF THE WORK REQUIRED.

D. WASTE PIPING SHALL BE STANDARD PVC OR WEIGHT CAST IRON WITH BELL AND SPIGOT OR NO–HUB CONNECTIONS. VENT PIPING SHALL BE PVC OR STANDARD WEIGHT CAST IRON ABOVE AND BELOW THE FLOOR.

E. ALL WATER PIPING SHALL BE TYPE L COPPER OR PEX ABOVE FLOOR AND TYPE K COPPER, PEX OR AQUATHERM BELOW THE FLOOR. PVC CANNOT BE USED FOR DOMESTIC HOT WATER PIPING. ALL COPPER JOINTS SHALL BE MADE WITH 95/5 TIN/ANTIMONY OR SILVER SOLDERED JOINTS. NO LEAD SOLDER ALLOWED.

F. LIQUID PROPANE GAS PIPING SHALL BE SCHEDULE 40 BLACK STEEL ABOVE GRADE AND SHALL BE SCHEDULE 40 BLACK STEEL WRAPPED WITH SCOTHCHWRAP OR POLYETHYLENE PIPING WHEN BURIED. PIPING SHALL BE PAINTED WHEN EXPOSED.

G. REFER TO PLUMBING FIXTURE SCHEDULE FOR WASTE, VENT. AND WATER LINE SIZES FOR INDIVIDUAL FIXTURES.

H. MINIMUM DEPTH OF BURY:
WATER 48 IN.
SEWER 24 IN.
LPG 24 IN.

I. ROUTE PIPING AS NEARLY AS POSSIBLE TO THE ROUTING INDICATED ON THE PLANS, BUT MAKE MINOR CHANGES IN ROUTING TO ACCOMMODATE THE CONDITIONS AT THE SITE. DO NOT UNDERTAKE MAJOR REROUTING OF PIPING WITHOUT WRITTEN APPROVAL FROM OWNER OR ENGINEER. BE RESPONSIBLE FOR ALL REQUIRED TRANSITIONS, OFFSETS, MINOR RELOCATIONS, AND ALL ASSOCIATED FITTINGS, PIPING, AND EQUIPMENT TO INSTALL A COMPLETE AND OPERATIONAL SYSTEM.

J. INSTALL ISOLATION VALVES AND UNIONS AT ALL BRANCH TAKEOFFS. PROVIDE ACCESS PANELS TO ALL INACCESSIBLE PLUMBING EQUIPMENT TO INCLUDE BUT NOT LIMITED TO VALVES, CONTROL VALVES, ETC.

K. ALL PIPING (DOMESTIC HOT WATER, DOMESTIC COLD WATER) IN THE BUILDING SHALL BE INSULATED ACCORDING TO THE SPECIFICATIONS OR THE NEW MODEL ENERGY CODE WHICH EVER IS MORE STRINGENT.

L. PROVIDE WALL CLEANOUTS AT ALL SINKS, LAVATORIES, WATER COOLERS, AND WALL MOUNTED URINALS.

M. PROVIDE GAS COCKS AND FLEXIBLE CONNECTIONS AT EACH GAS OUTLET FOR APPLIANCES AND WATER HEATER.

N. INSTALL CONDENSATE AND OVERFLOW PIPING FROM ALL MECHANICAL EQUIPMENT DRAIN POINTS. EXTEND AND TERMINATE PER UMC/UPC. ALL CONDENSATE AND OVERFLOW PIPING SHALL BE INSULATED PER SPECIFICATIONS FOR APPROPRIATE TEMPERATURE RANGE.

O. INSULATE ALL COLD AND HOT WATER SUPPLY TUBING AND P–TRAPS AT EACH LAVATORY WITH "TRAP–WRAP" BY BROCAR PRODUCTS INC. INCLUDE ALL FITTINGS FOR A COMPLETE INSTALLATION.

MECHANICAL & ELECTRICAL ENGINEERING, INC.
PROJECT #16148

SANTA FE:
1222 Luisa St. Suite B
Santa Fe, New Mexico 87505
505/983–2389

ALBUQUERQUE:
8417 Washington Pl., NE
Albuquerque, NM 87113
505/856–1899

P: FP: M: E:

10/20/17
KARL M. TIPTON
NEW MEXICO
21200
PROFESSIONAL ENGINEER

autotroph
architecture.planning.sustainable design consulting

No.	Description	Date

Hwy 14 Senior Center

PLUMBING LEGEND AND GENERAL NOTES

Project Number	1606
Date	10.20.17
Drawn By	MP
Checked By	KT

P0.1

KEYED NOTES:

6. COLD WATER MAKE UP FOR IRRIGATION WATER RECLAMATION TANKS. INSTALL VALVE IN CAN AS SHOWN. SEE "ENLARGED PLUMBING FLOOR PLAN" ON SHEET P4.3 FOR MAKE UP WATER PIPING AT INTERIOR OF BUILDING.

7. LIQUID PROPANE TANK BY OTHERS. COORDINATE WITH ARCHITECT AND LPG PROVIDER FOR TANK INFORMATION.

KEYED NOTES:

1. SEE CIVIL DRAWINGS SHEET C3 FOR CONTINUATION OF SANITARY WASTE AND DOMESTIC AND FIRE WATER SUPPLY PIPING.

2. SEE CIVIL DRAWINGS FOR SEPTIC SYSTEM INFORMATION.

3. REGULATE LIQUID PROPANE GAS TO "HOUSE PRESSURE" (14" W.C.) AT THIS LOCATION.

4. ROUTE CONDENSATE DRAIN PIPING TO 24 IN. X 24 IN. CONDENSATE DRAIN PAN "DIVERSITECH" AT THIS LOCATION. SLOPE ALL CONDENSATE DRAIN PIPING AT 1/8 IN. PER FOOT TOWARDS DRAIN PAN.

5. IRRIGATION WATER RECLAMATION TANKS. IRRIGATION WATER RECLAMATION DESIGN BY OTHERS. CONTACT PAUL DONAH "CULLIGAN WATER CONDITIONING OF ALBUQUERQUE" AND ARCHITECT FOR ADDITIONAL IRRIGATION WATER RECLAMATION R.O. INFORMATION.

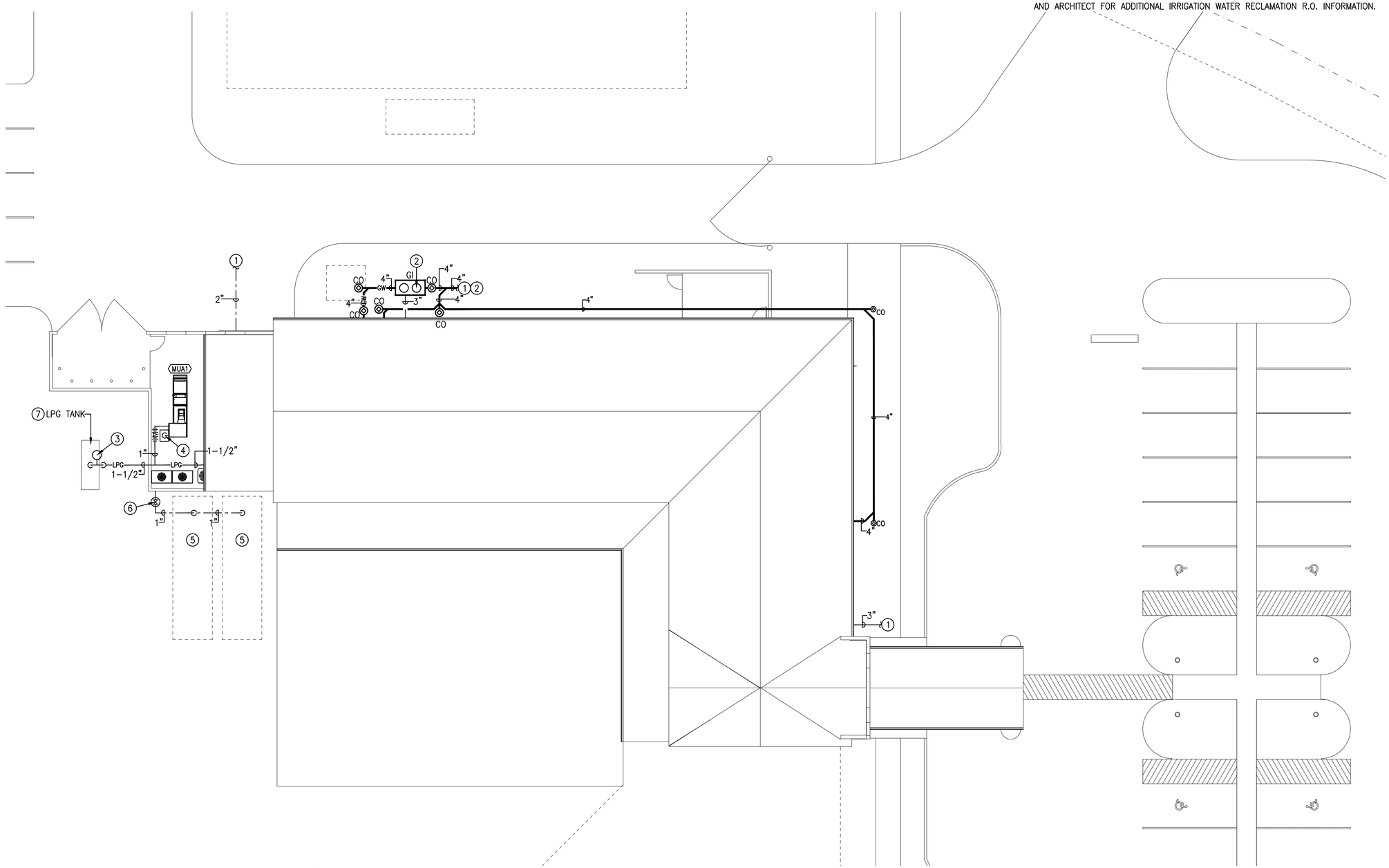

PLUMBING SITE UTILITY PLAN

SCALE: 1:10

MECHANICAL & ELECTRICAL ENGINEERING, INC.
PROJECT #16148

SANTA FE:
1222 Luisa St. Suite B
Santa Fe, New Mexico 87505
505/983-2389

ALBUQUERQUE:
8417 Washington Pl., NE
Albuquerque, NM 87113
505/856-1699

P: | FP: | M: | E:

10/20/17
KARL M. TIPTON
NEW MEXICO
21200
PROFESSIONAL ENGINEER

autotroph
architecture.planning.sustainable design consulting

No.	Description	Date

Hwy 14 Senior Center

PLUMBING SITE UTILITY PLAN

Project Number	1606
Date	10.20.17
Drawn By	MP
Checked By	KT

SU1.1

KEYED NOTES:

1. SEE "PLUMBING ENLARGED FLOOR PLANS" ON SHEET P4.1, P4.2 AND P4.3 FOR INFORMATION IN THIS AREA.
2. SEE SITE UTILITY PLAN ON SHEET SU1.1 FOR CONTINUATION OF SANITARY WASTE, DOMESTIC AND FIRE WATER SUPPLY PIPING.
3. STUB OUT IRRIGATION MAKE UP WATER SUPPLY AT THIS LOCATION. SEE IRRIGATION PIPING SCHEMATIC ON SHEET P6.2 AND ARCHITECTURAL PLANS FOR ADDITIONAL IRRIGATION INFORMATION.

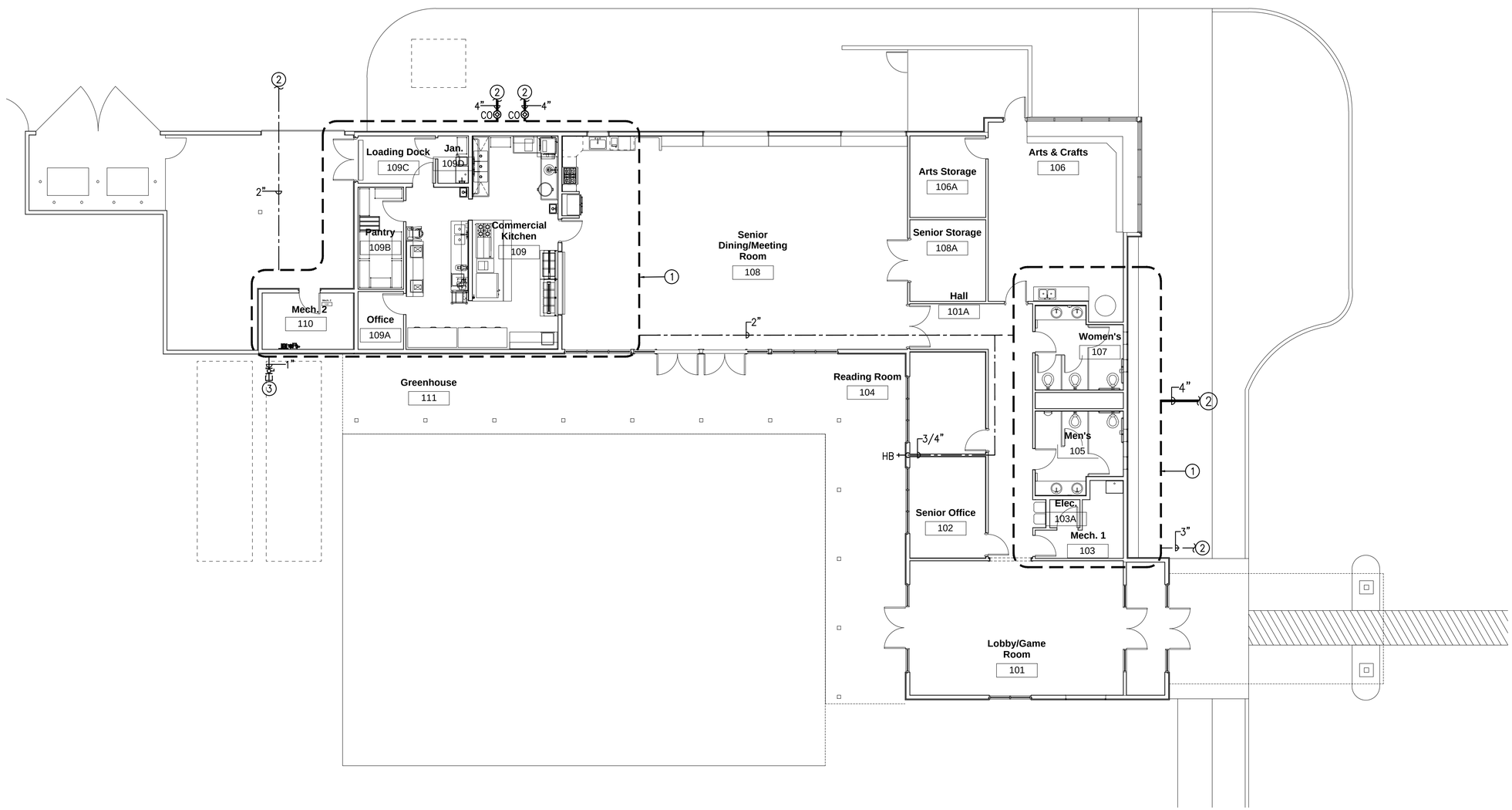

PLUMBING OVERALL FLOOR PLAN - SANITARY WASTE, VENT, AND DOMESTIC WATER

SCALE: 1/8" = 1'-0"

MECHANICAL & ELECTRICAL ENGINEERING, INC.
PROJECT #16148

SANTA FE:
1222 Luisa St. Suite B
Santa Fe, New Mexico 87505
505/983-2389

ALBUQUERQUE:
8417 Washington Pl., NE
Albuquerque, NM 87113
505/856-1699

P:	FP:	M:	E:

10/20/17
KARL M. TIPTON
NEW MEXICO
21200
PROFESSIONAL ENGINEER

autotroph
architecture.planning.sustainable design consulting

No.	Description	Date

Hwy 14 Senior Center

PLUMBING OVERALL FLOOR PLAN

Project Number	1606
Date	10.20.17
Drawn By	MP
Checked By	KT

P1.1

KEYED NOTES:

1. INSTALL TRAP AT UNIT AND ROUTE CONDENSATE DRAIN PIPING FROM MECHANICAL UNIT TO FLOOR SINK AS SHOWN. SLOPE CONDENSATE DRAIN PIPING AT 1/8 IN. PER FOOT TOWARDS OUTLET.

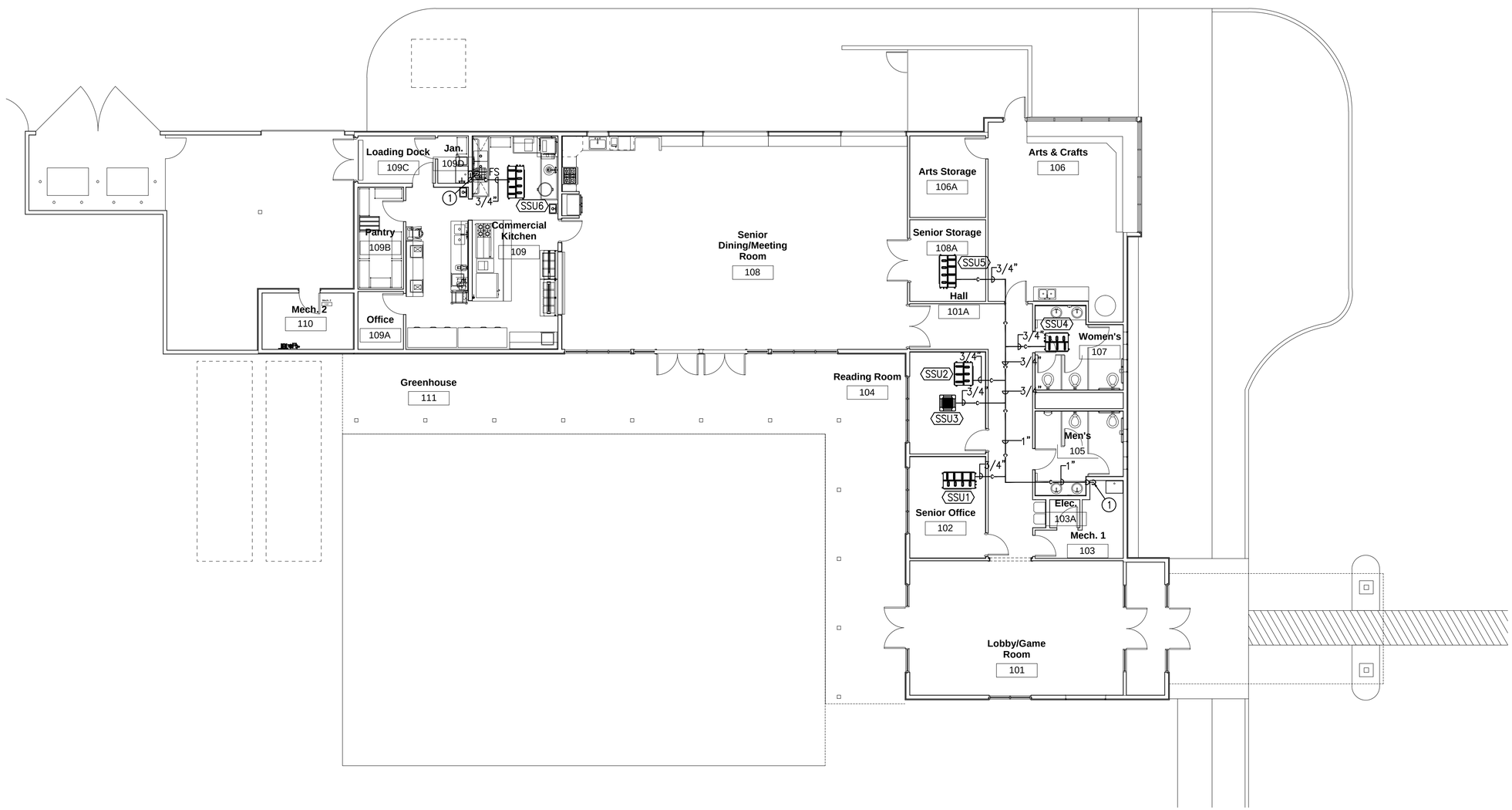

PLUMBING OVERALL FLOOR PLAN - CONDENSATE PIPING

SCALE: 1/8" = 1'-0"

MECHANICAL & ELECTRICAL ENGINEERING, INC.
PROJECT #16148

SANTA FE:
1222 Luisa St. Suite B
Santa Fe, New Mexico 87505
505/983-2389

ALBUQUERQUE:
8417 Washington Pl., NE
Albuquerque, NM 87113
505/856-1699

P: | FP: | M: | E:

10/20/17
KARL M. TIPTON
NEW MEXICO
21200
PROFESSIONAL ENGINEER

autotroph
architecture.planning.sustainable design consulting

No.	Description	Date

Hwy 14 Senior Center

PLUMBING OVERALL FLOOR PLAN - CONDENSATE PIPING

Project Number	1606
Date	10.20.17
Drawn By	MP
Checked By	KT

P1.2

GENERAL NOTE:

A. SEE FOODSERVICE PLANS FOR KITCHEN EQUIPMENT AND ROUGH IN INFORMATION.

KEYED NOTES:

1. SEE "OVERALL PLUMBING FLOOR PLAN" ON SHEE P1.1 FOR CONTINUATION OF SANITARY WASTE AND VENT PIPING.
2. INSTALL CLAY TRAP (CT) BELOW COUNTER. SEE PLUMBING FIXTURE SCHEDULE ON SHEET P6.1 FOR ADDITIONAL CLAY TRAP INFORMATION.

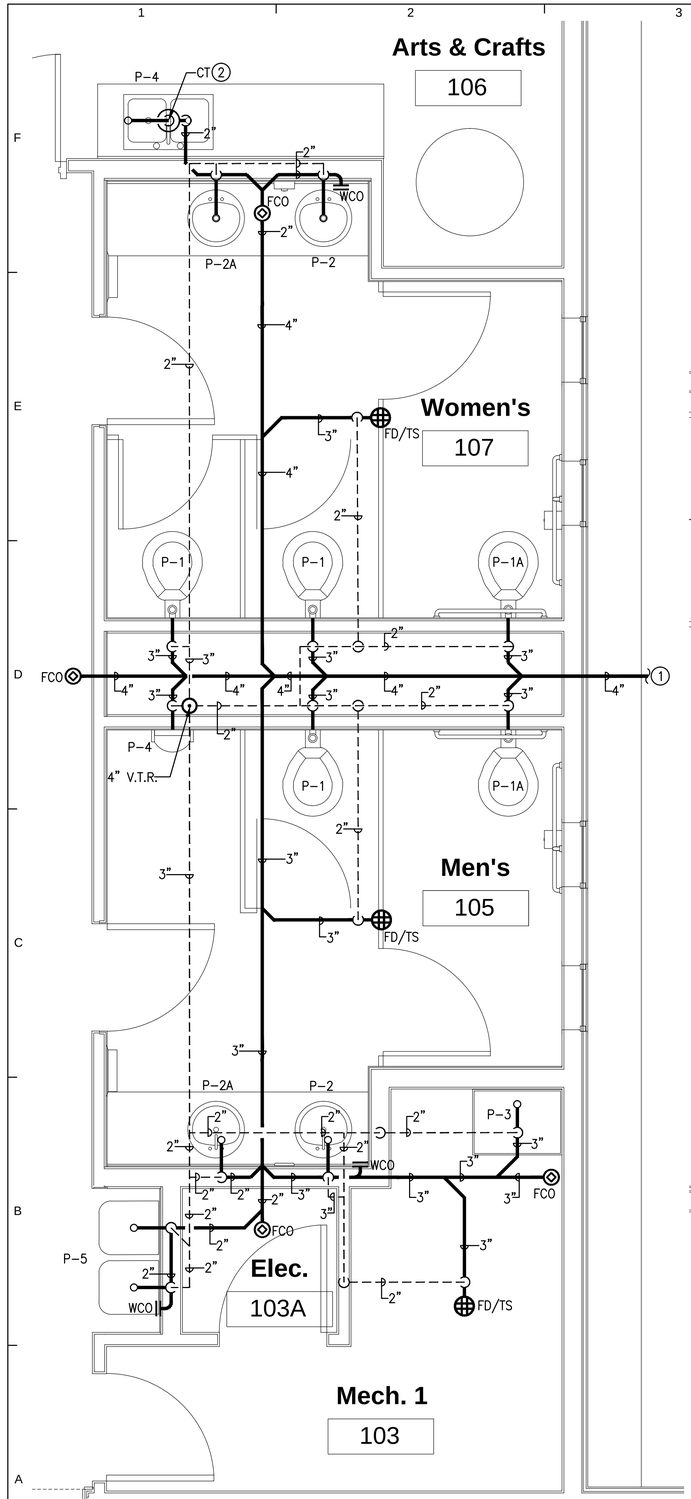

PLUMBING ENLARGED FLOOR PLAN SANITARY WASTE AND VENT

SCALE: 1/2" = 1'-0"

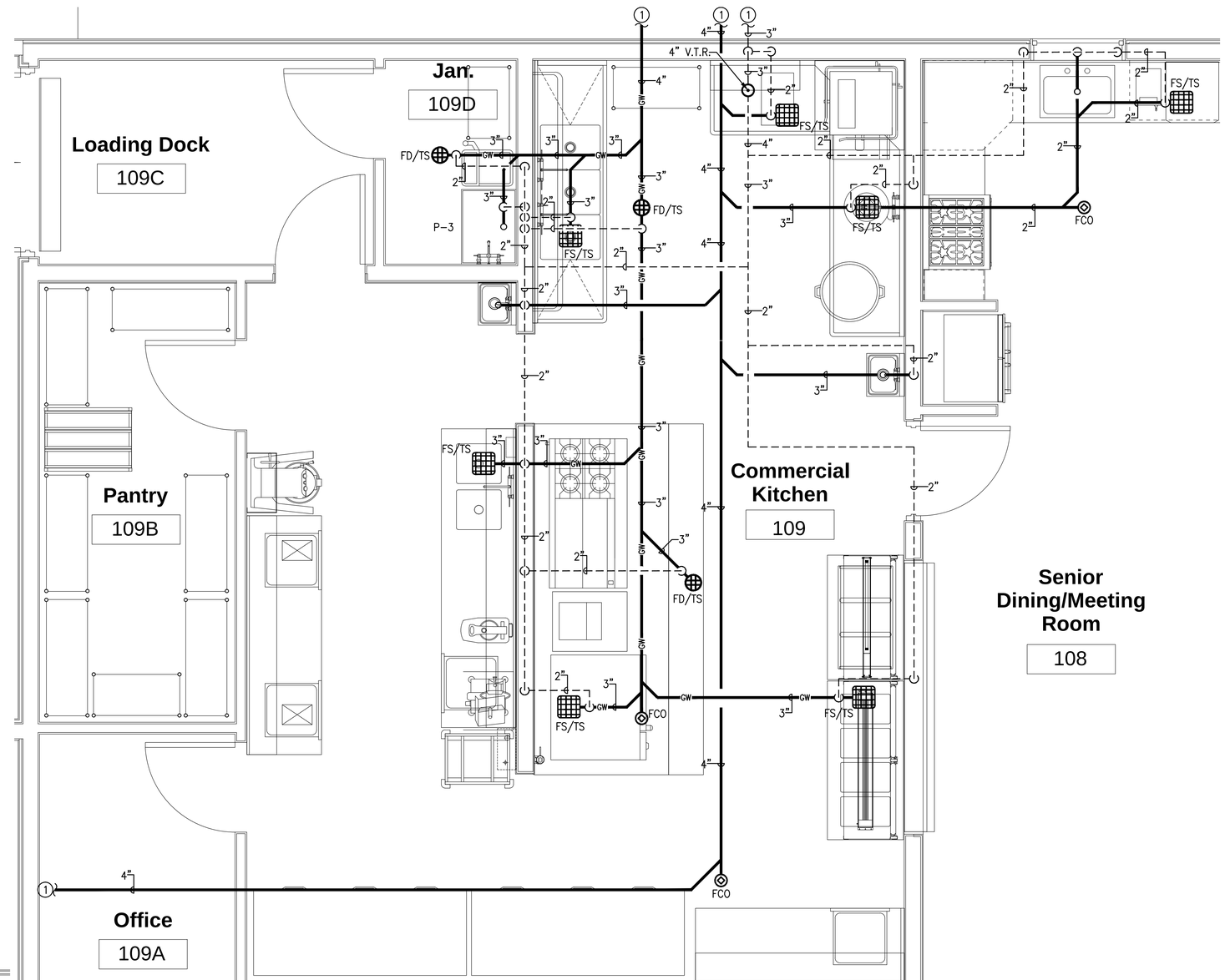

PLUMBING ENLARGED FLOOR PLAN - SANITARY WASTE AND VENT

SCALE: 1/2" = 1'-0"

MECHANICAL & ELECTRICAL ENGINEERING, INC.
PROJECT #16148

SANTA FE:
1222 Luisa St. Suite B
Santa Fe, New Mexico 87505
505/983-2389

ALBUQUERQUE:
8417 Washington Pl., NE
Albuquerque, NM 87113
505/856-1699

P:	FP:	M:	E:

10/20/17
KARL M. TIPTON
NEW MEXICO
21200
PROFESSIONAL ENGINEER

autotroph
architecture.planning.sustainable design consulting

No.	Description	Date

Hwy 14 Senior Center

PLUMBING ENLARGED FLOOR PLANS - WASTE AND VENT

Project Number	1606
Date	10.20.17
Drawn By	MP
Checked By	KT

P4.1

GENERAL NOTE:

A. SEE FOODSERVICE PLANS FOR KITCHEN EQUIPMENT INFORMATION.

KEYED NOTES:

1. SEE "PLUMBING ENLARGED PLAN" ON SHEET P4.3 FOR CONTINUATION OF DOMESTIC WATER PIPING.
2. SEE "PLUMBING OVERALL PLAN" ON SHEET P1.1 FOR CONTINUATION OF DOMESTIC WATER SUPPLY PIPING.
3. INSTALL WATER HEATER ON WALL STAND AT THIS LOCATION. VERIFY STAND HEIGHT WITH OWNER AND EQUIPMENT MANUFACTURER. SEE WATER HEATER DETAIL ON SHEET P5.1 FOR ADDITIONAL INFORMATION. ROUTE DRAIN FOR T&P VALVE TO MOP SINK BELOW.
4. INSTALL CIRCUIT SETTER TYPE BALL VALVE "BELL & GOSSET MODEL NO. MV FOR BALANCING OF THE HOT WATER RECIRCULATING SYSTEM. INSTALL ACCESS PANEL FOR VALVE MAINTENANCE.

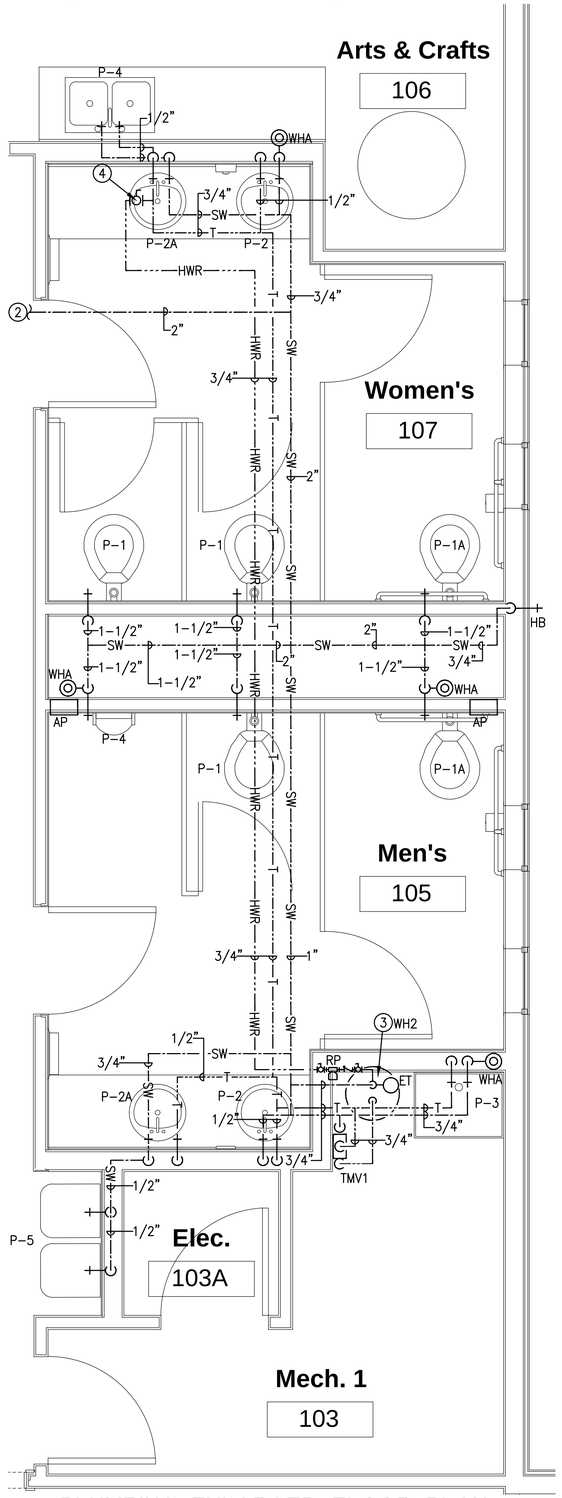

PLUMBING ENLARGED FLOOR PLAN DOMESTIC WATER AND GAS

SCALE: 1/2" = 1'-0"

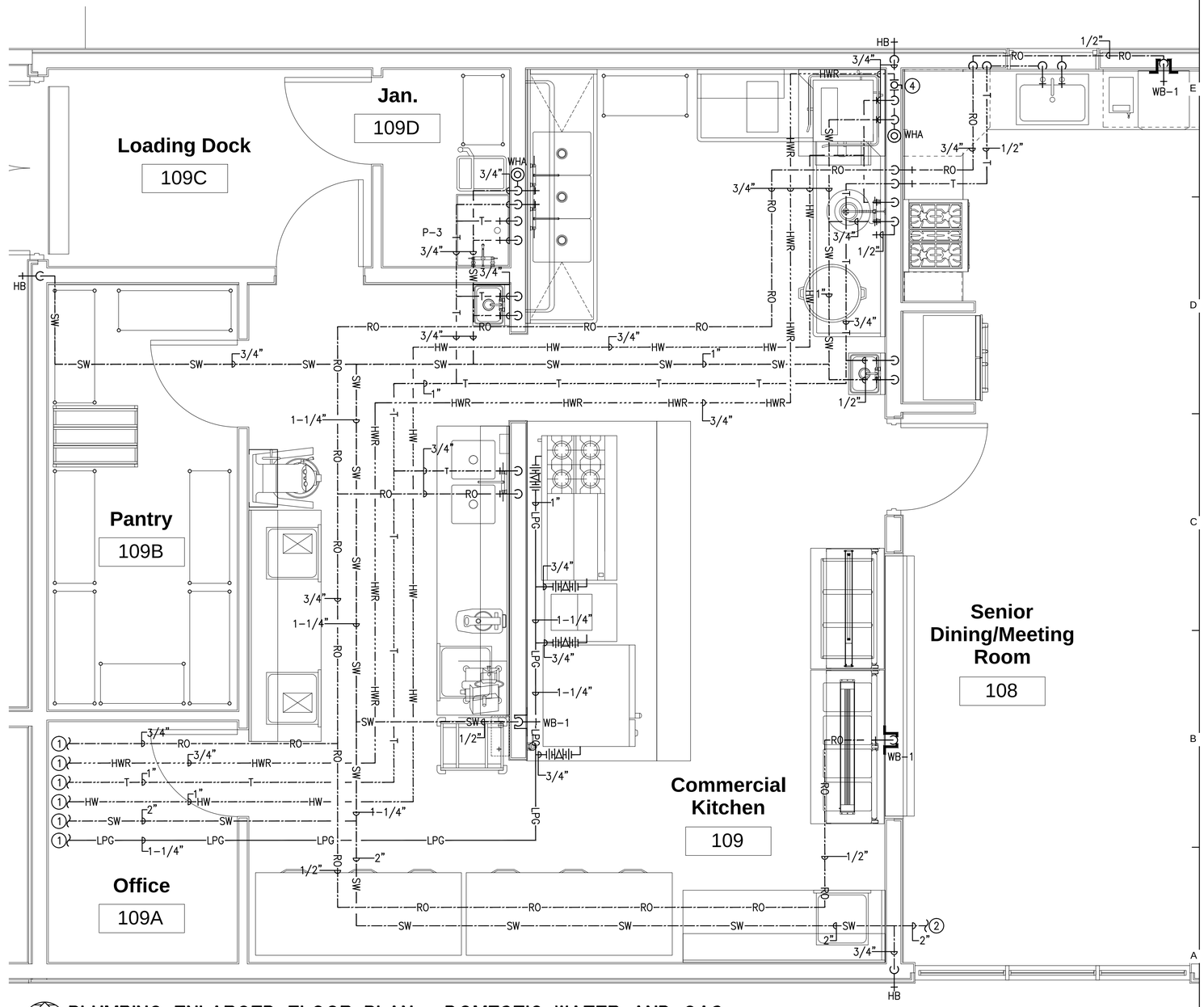

PLUMBING ENLARGED FLOOR PLAN - DOMESTIC WATER AND GAS

SCALE: 1/2" = 1'-0"

MECHANICAL & ELECTRICAL ENGINEERING, INC.
PROJECT #16148

SANTA FE:
1222 Luisa St. Suite B
Santa Fe, New Mexico 87505
505/983-2389

ALBUQUERQUE:
8417 Washington Pl., NE
Albuquerque, NM 87113
505/856-1899

P: | FP: | M: | E:

10/20/17 KARL M. TIPTON NEW MEXICO 21200 PROFESSIONAL ENGINEER

autotroph
architecture.planning.sustainable design consulting

No.	Description	Date

Hwy 14 Senior Center

PLUMBING ENLARGED FLOOR PLANS - DOMESTIC WATER AND GAS

Project Number	1606
Date	10.20.17
Drawn By	MP
Checked By	KT

P4.2

KEYED NOTES:

1. SEE "PLUMBING OVERALL FLOOR PLANS" ON SHEETS P4.1 AND P1.1 FOR CONTINUATION OF DOMESTIC WATER AND NATURAL GAS PIPING.
2. SEE "PLUMBING ENLARGED FLOOR PLANS ON SHEET P4.2 FOR CONTINUATION OF DOMESTIC WATER, SANITARY WASTE AND NATURAL GAS PIPING.
3. ROUTE DRAIN FOR BACKFLOW PREVENTERS TO DAYLIGHT.
4. COLD WATER MAKE UP FOR IRRIGATION TANKS.
5. REFER TO SPECIFICATION SECTION 22 31 00 FOR WATER SOFTENER INFORMATION AND PERFORMANCE. INSTALLATION OF REVERSE OSMOSIS EQUIPMENT AT THIS LOCATION TO BE DETERMINED AT A LATER DATE.

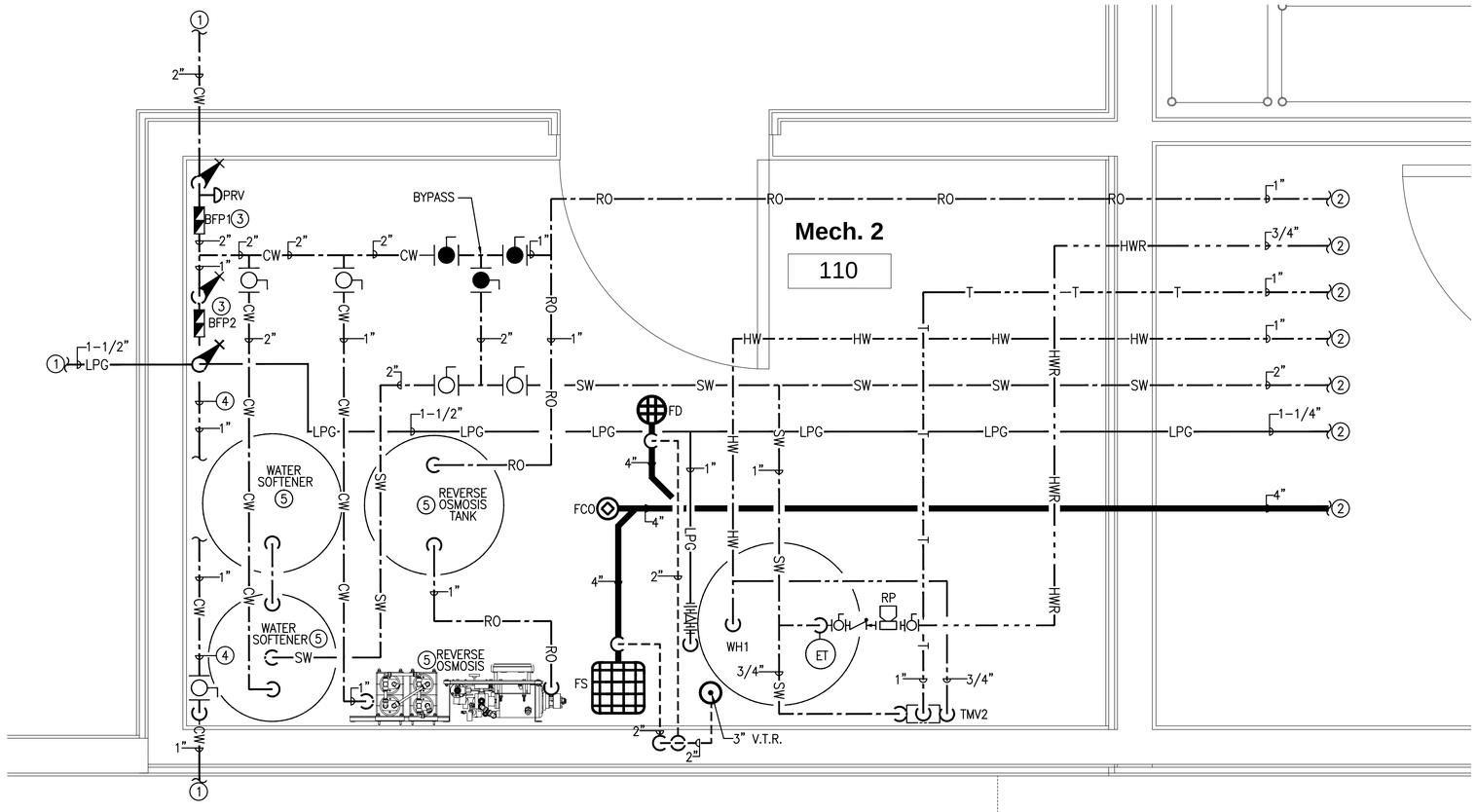

PLUMBING ENLARGED FLOOR PLAN - DOMESTIC WATER AND GAS

SCALE: 1" = 1'-0"

MECHANICAL & ELECTRICAL ENGINEERING, INC.
PROJECT #16148

SANTA FE:
1222 Luisa St. Suite B
Santa Fe, New Mexico 87505
505/983-2389

ALBUQUERQUE:
8417 Washington Pl., NE
Albuquerque, NM 87113
505/856-1899

P: | FP: | M: | E:

10/20/17 KARL M. TIPTON NEW MEXICO 21200 PROFESSIONAL ENGINEER

autotroph
architecture.planning.sustainable design consulting

No.	Description	Date

Hwy 14 Senior Center

PLUMBING ENLARGED FLOOR PLANS - DOMESTIC WATER AND GAS

Project Number	1606
Date	10.20.17
Drawn By	MP
Checked By	KT

P4.3

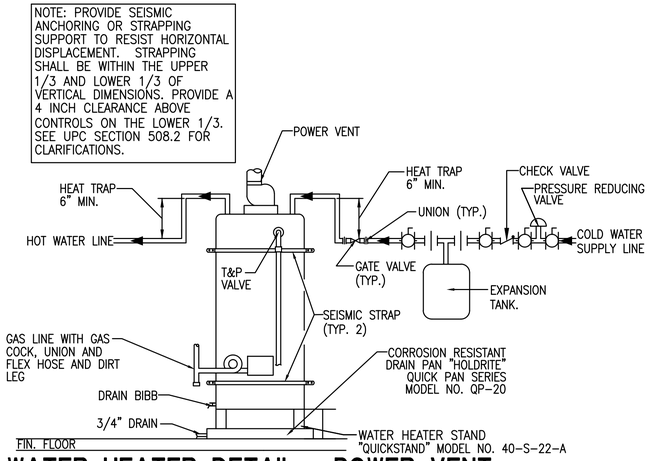

WATER HEATER DETAIL - POWER VENT

NOT TO SCALE

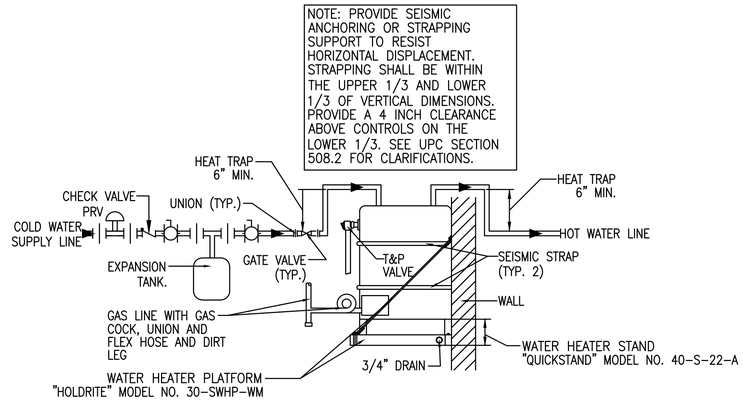

WATER HEATER DETAIL

NOT TO SCALE

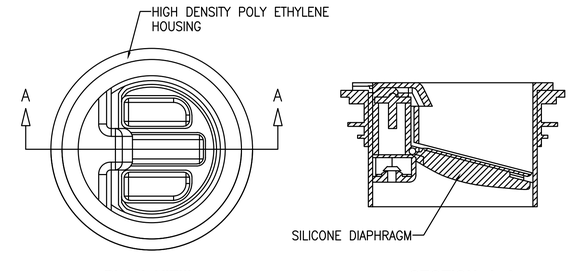

PLAN VIEW **SECTION A-A**

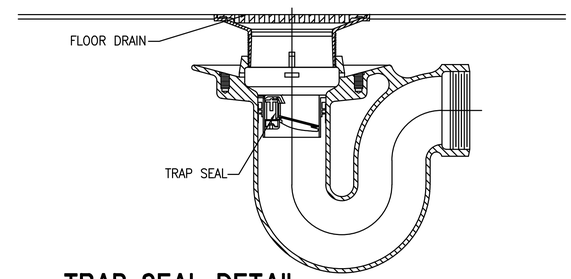

TRAP SEAL DETAIL

NOT TO SCALE

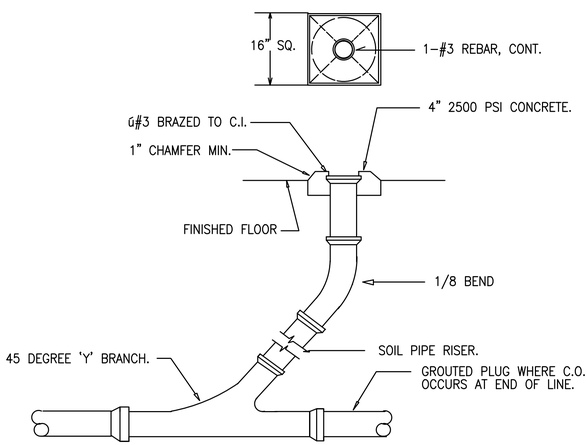

FINISHED FLOOR CLEANOUT

NOT TO SCALE

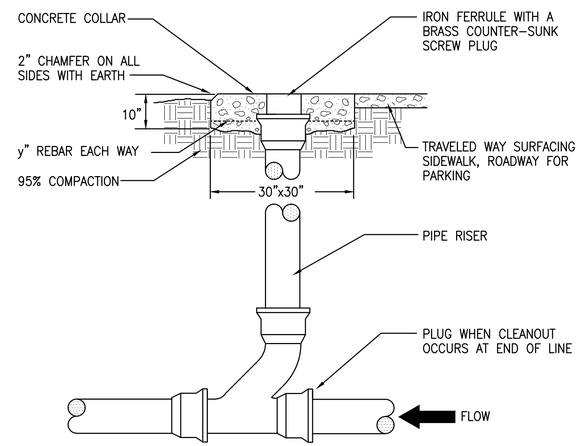

CLEANOUT DETAIL

NOT TO SCALE

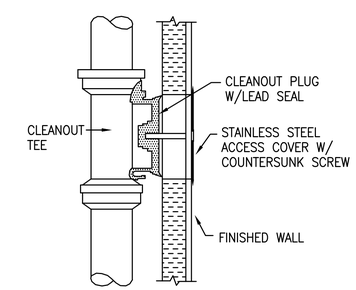

WALL CLEANOUT DETAIL

NOT TO SCALE

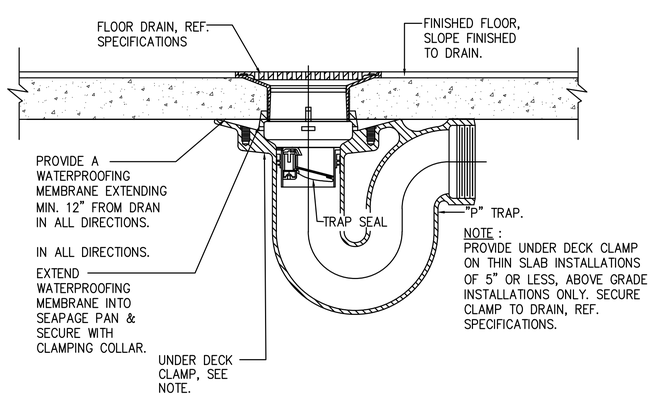

FLOOR DRAIN DETAIL

NOT TO SCALE

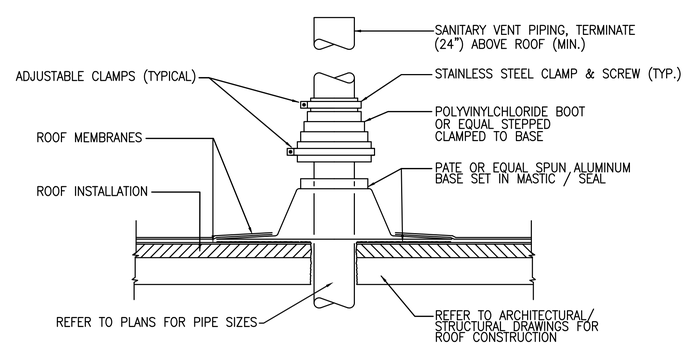

VENT THRU ROOF DETAIL

NOT TO SCALE

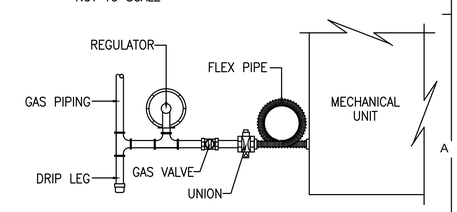

GAS PIPING DETAIL

NOT TO SCALE

MECHANICAL & ELECTRICAL ENGINEERING, INC.
PROJECT #16148
SANTA FE:
1222 Luisa St. Suite B
Santa Fe, New Mexico 87505
505/983-2389
ALBUQUERQUE:
8417 Washington Pl., NE
Albuquerque, NM 87113
505/856-1699
P: FP: M: E:

10/20/17
KARL M. TIPTON
NEW MEXICO
21200
PROFESSIONAL ENGINEER

autotroph
architecture.planning.sustainable design consulting

No.	Description	Date

Hwy 14 Senior Center

PLUMBING DETAILS

Project Number	1606
Date	10.20.17
Drawn By	MP
Checked By	KT

P5.1

PLUMBING FIXTURE SCHEDULE:

BFP1 BACKFLOW PREVENTER: A.S.S.E. NO. 1013 AND CSA B 64.4 COMPLIANCE REDUCED PRESSURE DUAL CHECK VALVE BACKFLOW PREVENTER. CONSTRUCTION: BRONZE BODY WITH STAINLESS STEEL INTERNAL PARTS. PROVIDE ALL EQUIPMENT NECESSARY FOR A COMPLETE OPERATION.
"WATTS" NO. 909; SIZE: 2 IN.

BFP2 BACKFLOW PREVENTER: A.S.S.E. NO. 1013 AND CSA B 64.4 COMPLIANCE REDUCED PRESSURE DUAL CHECK VALVE BACKFLOW PREVENTER. CONSTRUCTION: BRONZE BODY WITH STAINLESS STEEL INTERNAL PARTS. PROVIDE ALL EQUIPMENT NECESSARY FOR A COMPLETE OPERATION.
"WATTS" NO. 909; SIZE: 1 IN.

PRV PRESSURE REDUCING VALVE: A.S.S.E. STANDARD 1003 COMPLIANCE. BRONZE BODY CONSTRUCTION WITH UNION INLET, RENEWABLE STAINLESS STEEL SEAT, STAINLESS STEEL INTEGRAL STRAINER, REINFORCED EPDM DIAPHRAGM AND EPDM VALVE DISC. INLET PRESSURE 400 PSI MAXIMUM; 25–75 PSI RANGE; OPERATING TEMPERATURE OF 180 DEG. F MAXIMUM.
"WATTS" SERIES N35. SIZE: 2 IN.

TS FLOOR DRAIN TRAP SEALER: INLINE FLOOR DRAIN TRAP SEALER, 3 PIECES, ABS HOUSING WITH NEOPRENE RUBBER DIAPHRAGM WITH RUBBER GASKETS. PROVIDE AT ALL FLOOR DRAIN AND FLOOR SINK LOCATIONS.
"SURE SEAL" MODEL NO. SS2009L

AP ACCESS PANEL: PROVIDE AND INSTALL CEILING OR WALL MOUNTED ACCESS PANEL, FOR WALL OR CEILING TYPE SPECIFIED, WHERE REQUIRED FOR ACCESS TO VALVES AND WATER HAMMER ARRESTORS IN PLUMBING WALLS OR ABOVE HARD CEILINGS. PROVIDE WITH KEY OPERATED CAM LATCH. SIZE: 12 IN. X 12 IN. PROVIDE TWO (2) SETS OF KEYS TO OWNER.
"ACUDOR"

GI GREASE INTERCEPTOR: FABRICATED STEEL GREASE INTERCEPTOR. ACID RESISTING RUBBER BASE COATING INSIDE AND OUTSIDE, FLOW CONTROL FITTING SET AT 75 GPM, REMOVABLE BAFFLES, THREADED INLET AND OUTLET, INTERNAL AIR RELIEF, DOUBLE WALL TRAP WITH CLEANOUT, GASKETED SCORIATED COVER AND PDI SEAL OF APPROVAL. 75 GPM FLOWRATE, 150 LBS. GREASE CAPACITY AND 65 GALLON WATER CAPACITY.
"ZURN" NO. Z–1172 SIZE 900
INLET AND OUTLET = 3 IN.

WB–1 WALL BOX: FLUSH MOUNT, HIGH IMPACT POLYSTYRENE WITH 1/4 TURN REVERSE OSMOSIS RATED BALL VALVE WITH 2 SUPPORT BRACKETS. 6" W. X 6" H. X 3–3/8 D.
"OATEY" NO. 38823

PLUMBING FIXTURE SCHEDULE:

WH1 WATER HEATER: SELF CLEANING, LIQUID PROPANE GAS FIRED, DOMESTIC HOT WATER HEATER WITH A 60 GALLON STORAGE TANK, WORKING PRESSURE RATING OF 150 PSI, POWER VENT, FACTORY–INSTALLED TEMPERATURE AND PRESSURE RELIEF VALVE, POLYURETHANE FOAM INSULATION AND DRAIN VALVE. INPUT: 120 MBH, ORIFICED FOR OPERATION AT 7,000 FT. A.S.L. RECOVERY: 154 GPH AT 90 DEG. F TEMPERATURE RISE.
"A.O. SMITH" NO. BTH–120
CW = HW = 1 IN. CONNECTIONS AT TANK (SEE PLAN FOR LINE SIZES)

WH2 WATER HEATER: POINT–OF–USE ELECTRIC WATER HEATER WITH A 10 GALLON STORAGE TANK, WORKING PRESSURE RATING OF 150 PSI, FACTORY–INSTALLED TEMPERATURE AND PRESSURE RELIEF VALVE, 2 IN. THICK POLYURETHANE FOAM INSULATION, TANK INSPECTION PORT, AND DRAIN VALVE. TOTAL WATTAGE: 2000 WATTS WITH SINGLE ELEMENT.
120V/1PH/60HZ
"RHEEM" NO. PROE10–1–RH–POU
CW = HW =3/4 IN. CONNECTIONS AT TANK

RP RECIRCULATING PUMP: DOMESTIC HOT WATER IN–LINE RECIRCULATING PUMP WITH FACTORY WIRED 6 FT. LINE CORD AND 24 HOUR ANALOG TIMER OR PROVIDE WITH OPTIONAL AQUASTAT CAPACITY: 3 GPM AT 3 FT. TDH. BRONZE CONSTRUCTION, 125 PSI PRESSURE RATING, 220 DEG. F TEMPERATURE RATING.
ELEC: 115V/1 PH/60 HZ, 1/40 HP AT 3250 RPM, 0.43 AMPS
"TACO" NO. 003–PNP, WITH 3/4 IN. CONNECTIONS

ET EXPANSION TANK: PRE–PRESSURIZED, DIAPHRAGM TYPE EXPANSION TANK FOR POTABLE, OPEN, HOT WATER SYSTEMS. TOTAL TANK VOLUME OF 4.4 GALLONS; MAXIMUM ACCEPTANCE FACTOR OF 0.73; OPERATING TEMPERATURE OF 200 DEG. F.,HEIGHT 15" DIAMETER 11"
"AMTROL" THERM–X–TROL NO. ST–12

FD FLOOR DRAIN: CAST IRON FLOOR DRAIN WITH FLANGE, SEEPAGE OPENINGS, INTEGRAL DEEP SEAL TRAP, AND 6 IN. POLISHED TYPE 'B' NICKEL BRONZE STRAINER. EXTENSION ADAPTER MAY BE REQUIRED, CONTRACTOR TO VERIFY AND INCLUDE IF NECESSARY. SEE PLANS FOR SIZES. FLOOR DRAIN OUTLET SIZE TO MATCH CONNECTED PIPE SIZE.
"ZURN" NO. Z–453
WASTE = (SEE PLANS); VENT = 1–1/2 IN.

FS FLOOR SINK: CAST IRON BODY FLOOR SINK WITH FULL 12 IN. X 12 IN. SLOTTED MEDIUM DUTY GRATE, 8 IN. DEEP SUMP, WHITE ACID RESISTING PORCELAIN ENAMEL INTERIOR AND TOP, ALUMINUM ANTI–SPLASH INTERIOR BOTTOM DOME STRAINER. PROVIDE ALL NECESSARY ITEMS FOR COMPLETE INSTALLATION AND OPERATION. SEE PLANS FOR SIZES. FLOOR SINK OUTLET SIZE TO MATCH CONNECTED PIPE SIZE
"ZURN" NO. Z–1901–P
WASTE = (SEE PLANS); VENT = 1–1/2 IN.

WCO WALL CLEANOUT: BRASS PLUG WITH ROUND STAINLESS STEEL SECURED ACCESS COVER AND VANDAL PROOF SCREW.
"ZURN" NO. Z–1468–VP
WASTE = (SEE PLANS)

WHA WATER HAMMER ARRESTOR: WATER HAMMER ARRESTOR WITH NESTING TYPE BELLOWS CONTAINED WITHIN CASING HAVING SUFFICIENT DISPLACEMENT VOLUME TO DISSIPATE THE CALCULATED KINETIC ENERGY GENERATED IN THE PIPING SYSTEM. BOTH CASING AND BELLOWS ARE CONSTRUCTED OF 18–8 STAINLESS STEEL. SIZE AND LOCATE IN ACCESSIBLE LOCATION PER MANUFACTURER'S GUIDELINES.
"ZURN" NO. Z–1700, SIZE: BY CONTRACTOR, PER FIXTURE UNIT COUNT

TMV1 THERMOSTATIC MIXING VALVE: HOT WATER TEMPERATURE CONTROL VALVE, LEAD FREE LOCKABLE TEMPERATURE SETTING, BRASS BODY. PARAFFIN BASE THERMAL ACTUATION. WITH A MAXIMUM TEMPERATE OF 180 DEG. F. AND ALL ACCESSORIES FOR A COMPLETE INSTALLATION.
"WATTS" NO. LF1170–M2
CW & HW = 3/4"

TMV2 THERMOSTATIC MIXING VALVE: HOT WATER TEMPERATURE CONTROL VALVE, LEAD FREE LOCKABLE TEMPERATURE SETTING, BRASS BODY. PARAFFIN BASE THERMAL ACTUATION. WITH A MAXIMUM TEMPERATE OF 180 DEG. F. AND ALL ACCESSORIES FOR A COMPLETE INSTALLATION.
"WATTS" NO. LF1170–M2
CW & HW = 1"

PLUMBING FIXTURE SCHEDULE:

P–1 WATER CLOSET, WALL–MOUNT, FLUSH VALVE: WATER SAVING, 1.6 GPF, WALL–MOUNTED, VITREOUS CHINA WATER CLOSET, WITH TOP SPUD, ELONGATED BOWL, SIPHON–JET FLUSHING ACTION, AND OPEN FRONT PLASTIC SEAT. COMPLETE WITH CONCEALED CARRIER SYSTEM BY "ZURN", AND EXPOSED FLUSH VALVE BY "ZURN" NO. Z–6000XL–WS1, WITH VACUUM BREAKER.
"AMERICAN STANDARD" AFWALL NO. 2257.103
WASTE = 3 IN., VENT = 2 IN., CW = 1–1/2 IN.

P–1A WATER CLOSET, WALL–MOUNT, FLUSH VALVE, HANDICAPPED: WATER SAVING, 1.6 GPF, WALL–MOUNTED, VITREOUS CHINA WATER CLOSET, WITH TOP SPUD, ELONGATED BOWL, SIPHON–JET FLUSHING ACTION, AND OPEN FRONT PLASTIC SEAT. COMPLETE WITH CONCEALED CARRIER SYSTEM BY "ZURN" AND EXPOSED FLUSH VALVE BY "ZURN" NO. Z–6000XL–WS1, WITH ADA COMPLIANT HANDLE AND VACUUM BREAKER. INSTALL PER ADA REQUIREMENTS.
"AMERICAN STANDARD" AFWALL NO. 2257.103
WASTE = 3 IN., VENT = 2 IN., CW = 1–1/2 IN.

P–2 LAVATORY, COUNTERTOP: SELF–RIMMING, VITREOUS CHINA OVAL COUNTERTOP LAVATORY WITH 4 IN. FAUCET CENTERS AND WALL STOPS. WALL STOPS SHALL HAVE THREADED INLET AND COMPRESSION OUTLET CONNECTIONS. FAUCET: "ZURN" NO. Z–6915–XL–L SENSOR OPERATED BATTERY OPERATED WITH MIXING VALVE, COVERPLATE, POLISHED CHROME GRID DRAIN, 3/8" O.D. COPPER SUPPLY TUBES, AND 0.5 GPM VANDAL–RESISTANT FLOW DEVICE.
"AMERICAN STANDARD" AQUALYN NO. 0476.028
WASTE = 2 IN., VENT = 1–1/2 IN., CW & HW = 1/2 IN.

P–2A LAVATORY, COUNTERTOP, HANDICAPPED: SELF–RIMMING, VITREOUS CHINA OVAL COUNTERTOP LAVATORY WITH 4 IN. FAUCET CENTERS, WALL STOPS, AND INSULATED P–TRAP AND HOT WATER LINE. WALL STOPS SHALL HAVE THREADED INLET AND COMPRESSION OUTLET CONNECTIONS. FAUCET AND FITTINGS: FAUCET: "ZURN" NO. Z–6915–XL–L SENSOR OPERATED BATTERY OPERATED WITH MIXING VALVE, COVERPLATE, POLISHED CHROME GRID DRAIN, 3/8" O.D. COPPER SUPPLY TUBES, AND 0.5 GPM VANDAL–RESISTANT FLOW DEVICE. TRUEBRO 102W INSULATION FOR P–TRAP, OFFSET TAILPIECE AND HOT & COLD SUPPLIES. INSTALL PER ADA REQUIREMENTS.
"AMERICAN STANDARD" AQUALYN NO. 0476.028
WASTE = 2 IN., VENT = 1–1/2 IN., CW & HW = 1/2 IN.

P–3 MOP SERVICE BASIN: 24 IN. X 24 IN. X 12 IN. DEEP, ONE PIECE PRE–CAST TERRAZZO WITH STAINLESS STEEL CAPS ON ALL CURBS, 2 IN. THICK MINIMUM SHOULDERS, 3 IN. DRAIN CONNECTION, "CHICAGO FAUCET" NO. 835 SERVICE SINK FITTING WITH EXPOSED VALVES, RIGID SPOUT, VACUUM BREAKER, WALL BRACE, PAIL HOOK, AND 3/4 IN. HOSE THREAD. PROVIDE MOP HANGER NO. 889–CC.
"FIAT" NO. TSB–100
WASTE = 3 IN., VENT = 1–1/2 IN., CW & HW = 3/4 IN.

P–4 KITCHEN SINK: STAINLESS STEEL TWO COMPARTMENT, SELF–RIMMING SINK, CONSTRUCTED OF 20 GAUGE TYPE 302 STAINLESS STEEL WITH HEAVY DUTY 'SOUND GUARD' UNDERCOATING, FOUR FAUCET HOLES ON 4 IN. CENTERS, AND WALL STOPS. WALL STOPS SHALL HAVE THREADED INLET AND COMPRESSION OUTLET CONNECTIONS. DIMENSIONS: 33 IN. LONG X 22 IN. WIDE X 7–1/2 IN. DEEP WITH 1–3/4 IN. RADIUS COVED CORNERS AND 3–1/2 IN. CENTERED DRAIN OPENING. FAUCET AND FITTINGS: "ELKAY" NO. LK–4101 SINGLE–LEVER, DECK–MOUNT FAUCET WITH 8 IN. SWING SPOUT, 3/8" O.D. COPPER SUPPLY TUBES, RETRACTABLE SPRAY AND HOSE, AND 2.5 GPM FLOW DEVICE. PROVIDE WITH NO. LK–99 STAINLESS STEEL BASKET STRAINER WITH 1–1/2 IN. O.D. TAILPIECE, AND ALL ACCESSORIES FOR A COMPLETE INSTALLATION.
"ELKAY" NO. PSR–3322
WASTE = 2 IN., VENT = 1–1/2 IN., CW & HW = 1/2 IN.

P–5 ELECTRIC WATER COOLER, HANDICAPPED: WALL–MOUNTED, FILTERED, BI–LEVEL, VINYL CLAD STEEL CABINET, STAINLESS STEEL COOLER TOP, FRONT AND SIDE PUSH BAR OPERATION. CAPACITY: 8 GPH OF 50 DEG. F. WATER AT 70 DEG. F. AMBIENT AIR TEMPERATURE. ELECTRONIC BOTTLE FILLER SENSORWALL STOPS SHALL HAVE THREADED INLET AND COMPRESSION OUTLET CONNECTIONS. PROVIDE WALL SUPPORT SYSTEM BY ZURN, NO. Z–1225–BL WITH TOP AND BOTTOM PLATES. INSTALL PER ADA REQUIREMENTS.
ELEC: 120V/1PH/60HZ
"ELKAY" NO. LZSTL8WSSP
WASTE = 2 IN., VENT = 1–1/2 IN., CW = 1/2 IN.

CT CLAY TRAP: UNDER COUNTER POINT OF USE CLAY TRAP. HIGH STRENGTH PLASTIC AND PERMANENTLY SEALED LID. 3–1/2 GALLON WITH TWO FLEXIBLE HOSES, SEWER TAIL PIPE ADAPTER FITTING.
"BUFFALO" TRAP–EZE
WASTE = 2 IN.

MECHANICAL & ELECTRICAL ENGINEERING, INC.
PROJECT #16148
SANTA FE:
1222 Luisa St. Suite B
Santa Fe, New Mexico 87505
505/983–2389
ALBUQUERQUE:
8417 Washington Pl., NE
Albuquerque, NM 87113
505/856–1699

P1 | FP1 | M1 | E1

10/20/17
KARL M. TIPTON
NEW MEXICO
21200
PROFESSIONAL ENGINEER

autotroph
architecture.planning.sustainable design consulting

No.	Description	Date

Hwy 14 Senior Center

PLUMBING SCHEDULE

Project Number	1606
Date	10.20.17
Drawn By	MP
Checked By	KT

P6.1

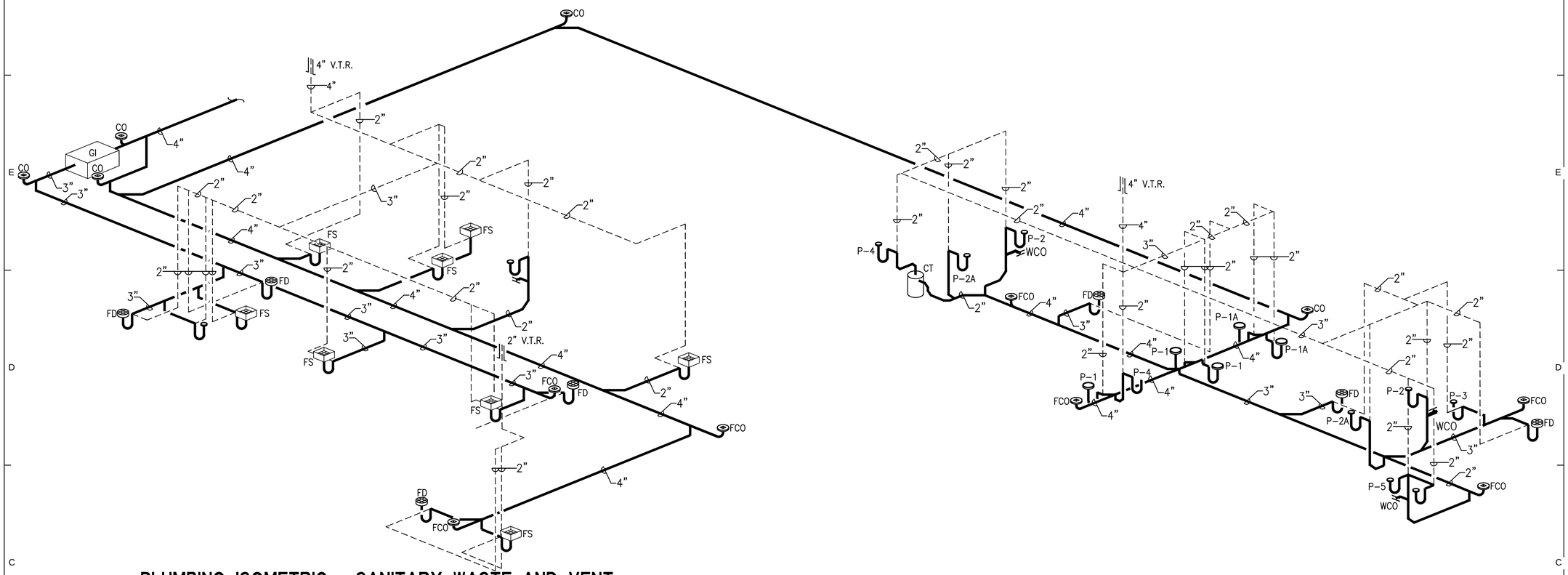

PLUMBING ISOMETRIC - SANITARY WASTE AND VENT

SCALE: N.T.S.

MECHANICAL & ELECTRICAL ENGINEERING, INC.
PROJECT #16148

SANTA FE:
1222 Luisa St. Suite B
Santa Fe, New Mexico 87505
505/983-2389

ALBUQUERQUE:
8417 Washington Pl., NE
Albuquerque, NM 87113
505/856-1899

P: | FP: | M: | E:

10/20/17
KARL M. TIPTON
NEW MEXICO
21200
PROFESSIONAL ENGINEER

autotroph
architecture.planning.sustainable design consulting

No.	Description	Date

Hwy 14 Senior Center

PLUMBING ISOMETRICS AND DIAGRAMS

Project Number	1606
Date	10.20.17
Drawn By	MP
Checked By	KT

P6.2

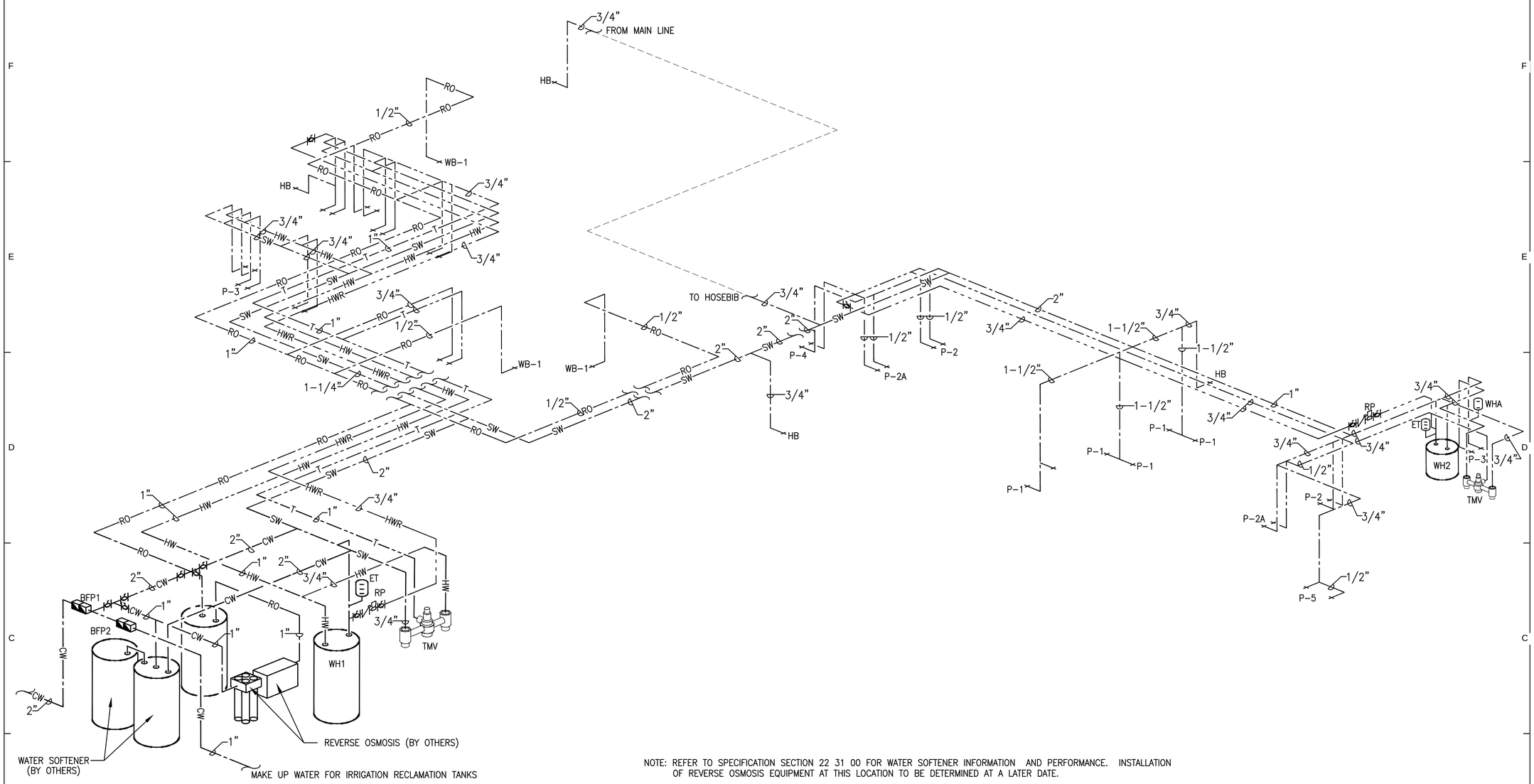

NOTE: REFER TO SPECIFICATION SECTION 22 31 00 FOR WATER SOFTENER INFORMATION AND PERFORMANCE. INSTALLATION OF REVERSE OSMOSIS EQUIPMENT AT THIS LOCATION TO BE DETERMINED AT A LATER DATE.

PLUMBING ISOMETRIC - DOMESTIC WATER

SCALE: N.T.S.

MECHANICAL & ELECTRICAL ENGINEERING, INC.
PROJECT #16148

SANTA FE:
1222 Luisa St. Suite B
Santa Fe, New Mexico 87505
505/983-2389

ALBUQUERQUE:
8417 Washington Pl., NE
Albuquerque, NM 87113
505/856-1899

P:	FP:	M:	E:

10/20/17
KARL M. TIPTON
NEW MEXICO
21200
PROFESSIONAL ENGINEER

autotroph
architecture.planning.sustainable design consulting

No.	Description	Date

Hwy 14 Senior Center

PLUMBING ISOMETRICS AND DIAGRAMS

Project Number	1606
Date	10.20.17
Drawn By	MP
Checked By	KT

P6.3

ELECTRICAL SYMBOLS LEGEND

LIGHTING

SYMBOL	DESCRIPTION
	RECESSED
	SURFACE
	BALLAST
	PENDANT
	EMERGENCY BATTERY
	EMERGENCY SURFACE
	EMERGENCY GENERATOR
	STRIP LIGHT
	WALL MOUNTED
	UNDER CABINET
	LIGHTING TRACK
	OUTDOOR POLE MOUNTED
	CEILING SURFACE MOUNTED
	RECESSED DOWNLIGHT
	WALL MOUNTED DOWNLIGHT
	EMERGENCY EXIT
	EMERGENCY EGRESS, 90" AFF
(e)	EXISTING FIXTURE
$	SINGLE POLE SWITCH, 42" AFF
3$	THREE WAY SWITCH, 42" AFF
4$	FOUR WAY SWITCH, 40" AFF
D$	DIMMER SWITCH, 42" AFF
LC	LIGHTING CONTACTOR
PC	PHOTO CELL
OS	OCCUPANCY SENSOR

COMMENTS:
"EM" LIGHTING FIXTURE RESERVE FOR EMERGENCY EGRESS
"X" LIGHTING FIXTURE RESERVE FOR EXIT

NOTE: THIS SYMBOLS LEGEND IS A GENERAL REPRESENTATION OF DEVICES USED. SOME PROJECTS MAY NOT UTILIZE ALL SYMBOLS REPRESENTED. COORDINATE ALL SYMBOLS FROM PLANS.

POWER

SYMBOL	DESCRIPTION
	DUPLEX RECEPTACLE, 18" AFF
	FOURPLEX RECEPTACLE, 18" AFF
	250V RECEPTACLE, 18" AFF
	DUPLEX RECEPT., 1/2 SWITCH, 18" AFF
GFI	GND FLT INTERRUPT RECEPT., 18" AFF
WP	WEATHER PROOF RECEPTACLE, 18" AFF
	SPECIAL RECEPTACLE
	SINGLE SPECIAL
	DUPLEX SPECIAL
	SIMPLEX RECEPTACLE
	CEILING MOUNTED DUPLEX RECEPTACLE
	FLOOR MOUNTED DUPLEX RECEPTACLE
	CLOCK OUTLET
	DISCONNECT SWITCH
	DISCONNECT/MOTOR STARTER
	STARTER OR CONTACTOR
T$	THERMAL OVERLOAD SWITCH
	MOTOR OR EXHAUST FAN
P B	PULL BOX
J	CEILING MOUNTED JUNCTION BOX
J	WALL MOUNTED JUNCTION BOX
T	THERMOSTAT OUTLET BOX
	ELECTRICAL PANEL, SURFACE MOUNTED
	ELECTRICAL PANEL, RECESSED MOUNTED
T	PAD MOUNT TRANSFORMER
T	WALL MOUNT TRANSFORMER
	ELECTRICAL KEYED NOTE
	EQUIPMENT SYMBOL
	BRANCH CIRCUIT HOMERUN
	GROUND
	GROUND ROD
	LIGHTNING ARRESTOR

SPECIAL SYSTEMS

SYMBOL	DESCRIPTION
F	FIRE ALARM PULL BOX, 42" AFF
F	FIRE ALARM STROBE, 90" AFF
F	FIRE ALARM HORN/STROBE, 90" AFF
MDH	FA MAGNETIC DOOR HOLDER
FS	FA FIRE/SMOKE DAMPER
RI	FA REMOTE INDICATOR
FS	FLOW SWITCH
TS	TAMPER SWITCH
	GAS DETECTOR
	HEAT DETECTOR
	SMOKE DETECTOR
	CEILING SPEAKER
	WALL MOUNTED SPEAKER, 90" AFF
V $	SPEAKER VOLUME CONTROL, 42" AFF
	TELEVISION OUTLET
	SECURITY DIGITAL KEY PAD
	SECURITY OUTLET
D	SECURITY DOOR CONTACTS
EL	ELECTRIC DOOR LOCK/STRIKE
	SECURITY CAMERA
	COMMUNICATIONS/DATA OUTLET
	COMMUNICATIONS/DATA OUTLET, IN FLOOR
	TELEPHONE OUTLET
	TELEPHONE OUTLET, IN FLOOR
$	PA CALL SWITCH
	BUZZER
	BELL
M	MICROPHONE, WALL MOUNTED
M	MICROPHONE, FLOOR MOUNTED
	SPECIAL SYSTEMS PANEL/CABINET
	TELEPHONE BACKBOARD
	EXISTING DEVICE SHOWN DASHED

PANELBOARD GENERAL NOTES:

A. 120/208 BRANCH CIRCUIT PANELS WITH CIRCUIT BREAKER CONSTRUCTION SHALL BE SQUARE "D" NQOD/I_LINE OR EQUAL.

B. 120/208 PANELBOARDS SHALL HAVE MINIMUM 10KAIC RATING, UNLESS OTHERWISE NOTED.

C. PANELBOARDS SHALL HAVE TYPED CIRCUIT DIRECTORIES, PLACED BEHIND CLEAR PLASTIC PROTECTIVE COVER. DESIGNATIONS ON DIRECTORY SHALL BE MORE DESCRIPTIVE THAN AS SHOWN ON THE DRAWING PANEL SCHEDULES. "SPARES" AND "SPACES" SHALL BE INDICATED ON DIRECTORY WITH ERASABLE PENCIL (NOT TYPED).

D. PANELBOARDS SHALL BE PROVIDED WITH NAMEPLATES SECURED TO EQUIPMENT WITH STEEL SCREWS. NAMEPLATES SHALL BE LAMINATED PLASTIC WITH ENGRAVED 3/4" MIN. WHITE LETTERS ON BLACK BACKGROUND AND SHALL INDICATE PANEL DESIGNATION, VOLTAGE, PHASE, AND AMPACITY AND LOCATION OF OVERCURRENT PROTECTIVE DEVICE FEEDING PANEL.

E. PANELBOARDS SHALL BE PROVIDED WITH GROUND BUS/GROUND STRIP MOUNTED ON A CLEAN SURFACE OF THE PANELBOARD CAN. GROUND CONDUCTOR SHALL BE PROVIDED TO THE PANELBOARD GROUND BUS FROM THE GROUND SYSTEM IN THE SERVICE ENTRANCE SECTION OF DISTRIBUTION SECTION.

F. PANELBOARDS SHALL HAVE FACTORY FURNISHED CIRCUIT BREAKER NUMBERING. PUNCHED TAPE OR MARKERS WILL NOT BE PERMITTED. BRANCH CIRCUIT BREAKER NUMBER ON PANELBOARDS SHALL MATCH NUMBERING AS SHOWN ON THE PLANS.

G. PROVIDE PANELS WITH LUGS/CONNECTIONS SIZED FOR FEEDERS SPECIFIED. FEEDERS MAYBE OVERSIZED PER NEC FOR DERATING FACTORS. COORDINATE FEEDER SIZES WITH EQUIPMENT SUPPLIER PRIOR TO ORDERING.

H. RATE PANELBOARDS FOR SERVICE ENTRANCE EQUIPMENT WHERE APPLICABLE, SHORT CIRCUIT RATING OF PANELBOARDS AND OVER–CURRENT PROTECTION TO BE COORDINATED WITH EXISTING UPSTREAM OVER–CURRENT PROTECTION PRIOR TO ISSUANCE OF SUBMITTALS. PROPERLY LABEL ALL PANELBOARDS.

MECHANICAL POWER GENERAL NOTES:

A. COORDINATE AND PROVIDE ALL POWER NECESSARY FOR MECHANICAL EQUIPMENT AS INDICATED ON THE MECHANICAL AND PLUMBING DRAWINGS.

B. CEILING MOUNTED J_BOXES, DEVICES, AND EQUIPMENT SHOWN FOR SCHEMATIC PURPOSES ONLY. CONTRACTOR SHALL COORDINATE EXACT PLACEMENT OF CEILING MOUNTED EQUIPMENT WITH ALL TRADES WORK IN FIELD WITH CONSIDERATION OF FIELD CONDITIONS TO AVOID CONFLICTS. LOCATION OF ALL DEVICES SHALL BE COORDINATED ARCHITECTURAL DRAWINGS PRIOR TO ROUGH_IN.

C. REFER TO MECHANICAL PLANS FOR EXACT LOCATION OF ALL MECHANICAL EQUIPMENT AND ELECTRICAL CHARACTERISTICS. VERIFY EQUIPMENT LOCATIONS WITH MECHANICAL PRIOR TO ROUGH_ IN.

D. MOUNT DISCONNECT SWITCH IN CONVENIENT LOCATION AT UNIT, PER NEC. COORDINATE LOCATION OF CONTROLS WITH MECHANICAL PRIOR TO CONDUIT ROUGH_IN. PROVIDE DISCONNECT SWITCH WITH EQUIPMENT GROUND BUS AND TERMINATE ALL EQUIPMENT GROUNDING CONDUCTORS AT DISCONNECT SWITCH EQUIPMENT GROUND BUS (DO NOT USE SCREW OR SINGLE LUG FOR EQUIPMENT GROUND CONNECTION). PROVIDE WEATHER_TIGHT FLEXIBLE CONDUIT CONNECTION FROM DISCONNECT SWITCH TO UNIT (NO EXCEPTIONS). ALL CONDUIT SHALL BE CONCEALED AS MUCH AS POSSIBLE FROM THE DISCONNECT SWITCH TO THE PANEL INDICATED. DISCONNECT SWITCH SHALL BE PROVIDED WITH ENGRAVED MICARTA NAMEPLATE INDICATING PANEL AND BRANCH CIRCUIT CONNECTED TO. COORDINATE MOTOR HORSEPOWER OF UNIT, VOLTAGE AND PHASE FOR SERVICE PROVIDED WITH MECHANICAL TO AVOID CONFLICTS IN THE FIELD.

LIGHTING GENERAL NOTES:

A. COORDINATE THE EXACT LOCATIONS OF ALL CEILING MOUNTED LIGHT FIXTURES WITH THE ARCHITECTURAL REFLECTED CEILING PLAN AND ALL OTHER TRADES WORK. NOTIFY ARCHITECT AND ENGINEER IMMEDIATELY FOR CONFLICTS OF LOCATIONS.

GENERAL NOTES:

A. THE ELECTRICAL CONTRACTOR SHALL BE RESPONSIBLE FOR COORDINATING AND PROVIDING ALL WORK INDICATED BY THESE DRAWINGS. THIS CONSISTS OF FURNISHING ALL LABOR, EQUIPMENT, SUPPLIES AND MATERIALS IN ADDITION TO PERFORMING ALL OPERATIONS INCLUDING CUTTING, CHANNELING AND UNDERGROUND TRENCHING NECESSARY FOR THE INSTALLATION OF COMPLETE POWER, LIGHTING , OR OTHER SYSTEMS AS SHOWN.

B. PERFORM ALL ELECTRICAL WORK IN A NEAT AND WORKMANLIKE MANNER IN FULL COMPLIANCE WITH ALL APPLICABLE CODES AND THE NATIONAL ELECTRICAL CODE (NEC). ALL LOCAL AND STATE REQUIREMENTS WILL BE OBSERVED DURING THE PERFORMANCE OF THIS WORK.

C. SHOULD THE CONTRACTOR DETECT ANY DISCREPANCIES BETWEEN CONTRACT DOCUMENTS AND LEGAL OR SAFETY REQUIREMENTS FOR THE PROJECT, HE SHALL PROMPTLY NOTIFY THE ENGINEER IN WRITING. ONCE NOTIFIED THE ENGINEER SHALL MODIFY THE CONTRACT DOCUMENTS ACCORDINGLY. IF THE CONTRACTOR PROCEEDS WITH ANY WORK WHICH IS IN VARIANCE OF KNOWN LEGAL OR SAFETY REQUIREMENTS, THE CONTRACTOR SHALL ASSUME RESPONSIBILITY FOR THIS WORK AND SHALL PROMPTLY CORRECT THE WORK WHEN NOTIFIED WITHOUT ADDITIONAL COST TO THE OWNER.

D. FIELD VERIFY EXISTING CONDITIONS PRIOR TO COMMENCING WORK. NOTIFY THE ENGINEER OF ANY DISCREPANCIES BEFORE PROCEEDING WITH DEMOLITION. NO CLAIM FOR ADDITIONAL COST OR TIME EXTENSION WILL BE ALLOWED WITHOUT PROPER NOTICE PLUS PRIOR DETERMINATION OF TIME AND COST TO THE OWNER.

E. ANY DAMAGE ON THE CONSTRUCTION SITE CAUSED BY THE CONTRACTOR OR A PARTY TO THE CONTRACTOR SHALL BE REPAIRED PRIOR TO CONTRACT DATE OF SUBSTANTIAL COMPLETION AT NO ADDITIONAL EXPENSE TO THE OWNER.

F. EXTEND ALL CONDUIT AND CONDUCTORS, INSTALL ELECTRICAL EQUIPMENT AS NECESSARY, AND MAKE ALL FINAL CONNECTIONS TO MECHANICAL AND OWNER FURNISHED EQUIPMENT. LEAVE ALL EQUIPMENT IN OPERABLE CONDITION WITH APPROPRIATE OVERLOAD AND SERVICE DISCONNECT PROTECTION AS REQUIRED BY THE APPLICABLE CODES. FOLLOW MANUFACTURER INSTALLATION GUIDELINES WHERE APPLICABLE.

G. SIZE ALL BOXES AND ENCLOSURES PER THE NEC. PROVIDE WORKING SPACE FOR ELECTRICAL INSTALLATIONS IN ACCORDANCE WITH NEC, ARTICLE 110.

H. MAINTAIN A MINIMUM OF 24 INCH SEPARATION BETWEEN POWER CONDUITS AND SIGNAL CONDUITS AS PRACTICAL. ROUTE CONDUITS TO NOT CROSS EACH OTHER.

I. AFTER COMPLETION OF THE INSTALLATION, THE ENTIRE SYSTEM SHALL BE THOROUGHLY CLEANED. REMOVE ALL FOREIGN MATTER, PAINT, OIL, DIRT, GREASE, UNNEEDED LABELS OR STICKERS FROM FIXTURES AND EQUIPMENT. REMOVE ALL RUBBISH AND DEBRIS ACCUMULATED DURING INSTALLATION FROM THE PREMISES.

J. NEW WORK DEVICES SHALL BE FLUSH IN WALLS CONDUIT/WIRING SHALL BE CONCEALED. ROUTING OF FEEDERS AND MATERIALS USED FOR DEVICES IN WALLS SHALL BE APPROVED BY ARCHITECT AND ENGINEER PRIOR TO ROUGH IN. REPAIR AND GROUT AROUND NEW J–BOXES AND FINISH AS NECESSARY TO MATCH FINISH. COORDINATE WITH ARCHITECT IN FIELD PRIOR TO ROUGH–IN TO AVOID CONFLICTS.

K. COORDINATE FINAL LOCATION OF ALL CONDUIT/FEEDERS, PANELS, AND CONTROL PANELS WITH ENGINEER, OWNER, ARCHITECT, AND ALL TRADES PRIOR TO BEGINNING ANY ROUGH–IN WORK. PROVIDE WORKING CLEARANCES PER NEC. COORDINATE ROUTING OF FEEDERS WITHIN WALL CAVITIES OR CHASES. VERIFY CONDUIT ROUTING PRIOR TO ROUGH–IN

L. KITCHEN EQUIPMENT SIZED PER RDA DRAWINGS, 4–06–17.

MECHANICAL / ELECTRICAL RESPONSIBILITY TABLE

SYM	UNIT		DISCONNECT		STARTER/CONTACTOR		CONTROL WIRE		CONTROL CONDUIT		AUTO SHUT–OFF	
	PROVIDED	INSTALLED	PROVIDED	INSTALLED	PROVIDED	INSTALLED	PROVIDED	INSTALLED	PROVIDED	INSTALLED	PROVIDED	INSTALLED
SSU	MC	MC	MC	EC	EC	EC	MC	MC	EC	EC	N/A	N/A
CDU	MC	MC	MC	EC	EC	EC	MC	MC	EC	EC	N/A	N/A
MUA	MC	MC	MC	EC	EC	EC	MC	MC	EC	EC	N/A	N/A
KH	MC	MC	MC	EC	EC	EC	MC	MC	EC	EC	N/A	N/A
KHF	MC	MC	MC	EC	EC	EC	MC	MC	EC	EC	N/A	N/A
DH	MC	MC	MC	EC	EC	EC	MC	MC	EC	EC	N/A	N/A
DHF	MC	MC	MC	EC	EC	EC	MC	MC	EC	EC	N/A	N/A
EF	MC	MC	MC	EC	EC	EC	MC	MC	EC	EC	N/A	N/A
CF	MC	MC	MC	EC	EC	EC	MC	MC	EC	EC	N/A	N/A
T	MC	EC	N/A	N/A	N/A	N/A	MC	MC	EC	EC	N/A	N/A
T1	MC	EC	N/A	N/A	N/A	N/A	MC	MC	EC	EC	N/A	N/A
TC	MC	EC	N/A	N/A	N/A	N/A	MC	MC	EC	EC	N/A	N/A

MC MECHANICAL CONTRACTOR
EC ELECTRICAL CONTRACTOR

MECHANICAL & ELECTRICAL ENGINEERING, INC.
PROJECT #16148
SANTA FE: 1222 Luisa St. Suite B Santa Fe, New Mexico 87505 505/983–2389
ALBUQUERQUE: 8417 Washington Pl., NE Albuquerque, NM 87113 505/856–1699
P: FP: M: E:

10/20/17 KARL M. TIPTON NEW MEXICO 21200 PROFESSIONAL ENGINEER

autotroph
architecture.planning.sustainable design consulting

No.	Description	Date

Hwy 14 Senior Center

ELECTRICAL LEGEND AND GENERAL NOTES

Project Number	1606
Date	10.20.17
Drawn By	LT
Checked By	KT

E0.1

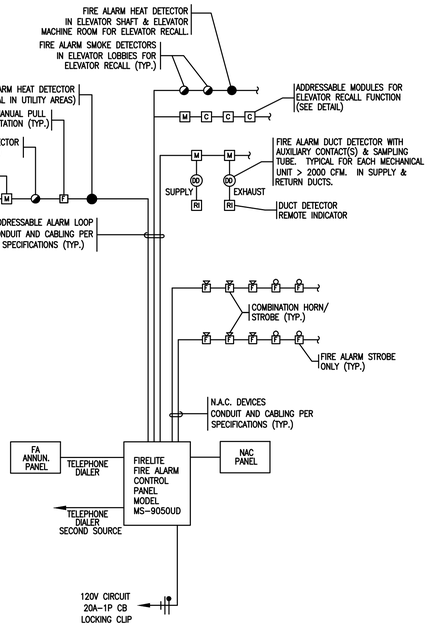

ADDRESSABLE FIRE ALARM RISER DIAGRAM

NOT TO SCALE

NOTE: SEE PLANS FOR LOCATIONS AND QUANTITIES OF FIRE ALARM DEVICES AND ZONING. PROVIDE CONNECTIONS AS REQUIRED. SEE SPECS.

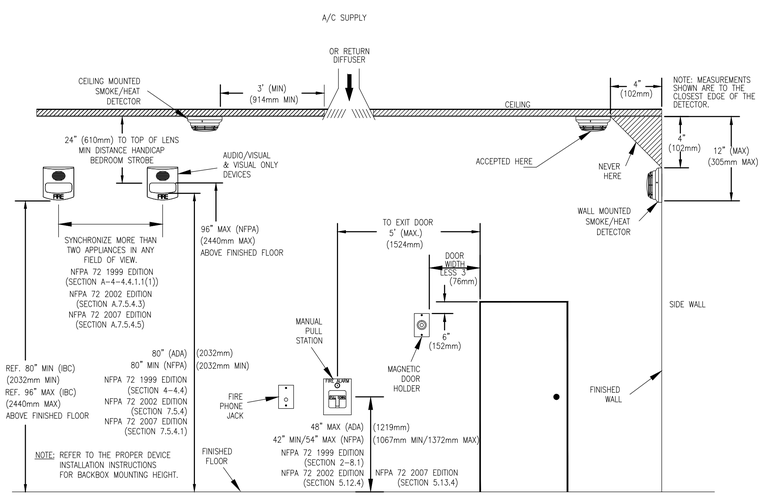

DEVICE MOUNTING HEIGHTS

NOT TO SCALE

LIGHT FIXTURE SCHEDULE

KEY	DESCRIPTION	MANUFACTURER	CATALOG #	#LAMPS/TYPE	VOLT.	WATTS/ FIXTURE	MOUNTING	COMMENTS
A	1x4 LED STRIP	COOPER LIGHTING	RZL-N-L-1-L30-1-C-UNV-A-C-JB-4-STD	LED	UNV	24	PENDENT	
A1	1x4 LED SURFACE	COOPER LIGHTING	L2-WS-1-L30-1-D-UNV-AC-4	LED	UNV	24	PENDENT	
B	RECESSED 2x2 TROFFER	LSI	ELFP22-LED-35-UE	LED	UNV	36	RECESSED/ SURFACE	SURFACE MOUNTED FIXTURES ADD ACCESSORY # ELFPSMK22
B1	RECESSED 2x4 TROFFER	LITHONIA LIGHTING	2SRTL-G-L48-3000LM-IAW-AFL-MVOLT EZ1-30K-80CRI	LED	UNV	36	RECESSED/ SURFACE	SURFACE MOUNTED FIXTURES ADD ACCESSORY # ELFPSMK22
C	LED SURFACE	COOPER LIGHTING	4WNLED-LD4-32SL-F-UNV-L840	LED	UNV	28	SURFACE	
D	6" SURFACE CAN	COOPER LIGHTING	SLD612-8-30-WH	LED	UNV	13	SURFACE	
F	LINEAR VANITY FIXTURE	COOPER LIGHTING	S22D-S-2-L30-SR-3-1-DD-SI-EM	LED	UNV	16.5	WALL	
H	WALL PACK	COOPER LIGHTING/ SURE-LITE	XTOR3B-PC1	LED	UNIV	18	WALL	
J	6" SURFACE CAN	COOPER LIGHTING	SLD612-8-30-WH	LED	UNV	13	SURFACE	
K	BALLARD	COOPER LIGHTING McGRAW EDISION	BSC-36-35-HPS-120-GM	LED	UNIV	35	GROUND	
M	POLE MOUNTED FIXTURE	LITHONIA LIGHTING	DSX0-40C-700-40K-BLC-MVOLT-SPA -DRIVER-DDBXD	LED	UNIV	91	POLE	
X	EXIT/EM LIGHT	COOPER LIGHTING/ SURE-LITE	APC7-R	LED	UNIV	7	SURFACE	
EM	EMERGANCY LIGHT	COOPER LIGHTING/ SURE-LITE	APEL	LED	UNIV	7	SURFACE	
EM	SIGN FIXTURE	COOPER LIGHTING/ LUMIERE	303-S1-LEDB2-3000-UNV-T2-DIM10-BK-24	LED	UNIV	20	SURFACE	

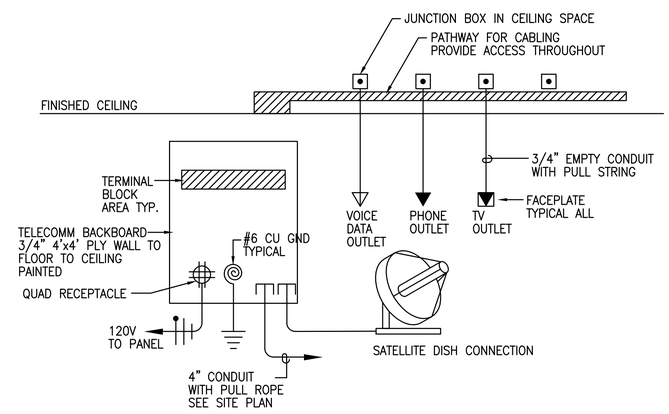

COMMUNICATIONS SYSTEM RISER

NOT TO SCALE:

MECHANICAL & ELECTRICAL ENGINEERING, INC.
PROJECT #16148
SANTA FE: 1222 Luisa St. Suite B Santa Fe, New Mexico 87505 505/983-2389
ALBUQUERQUE: 8417 Washington Pl., NE Albuquerque, NM 87113 505/856-1899
P: FP: M: E:

10/20/17 KARL M. TIPTON NEW MEXICO 21200 PROFESSIONAL ENGINEER

autotroph
architecture.planning.sustainable design consulting

No.	Description	Date

Hwy 14 Senior Center

ELECTRICAL DETAILS AND SCHEDULES

Project Number	1606
Date	10.20.17
Drawn By	LT
Checked By	KT

E0.2

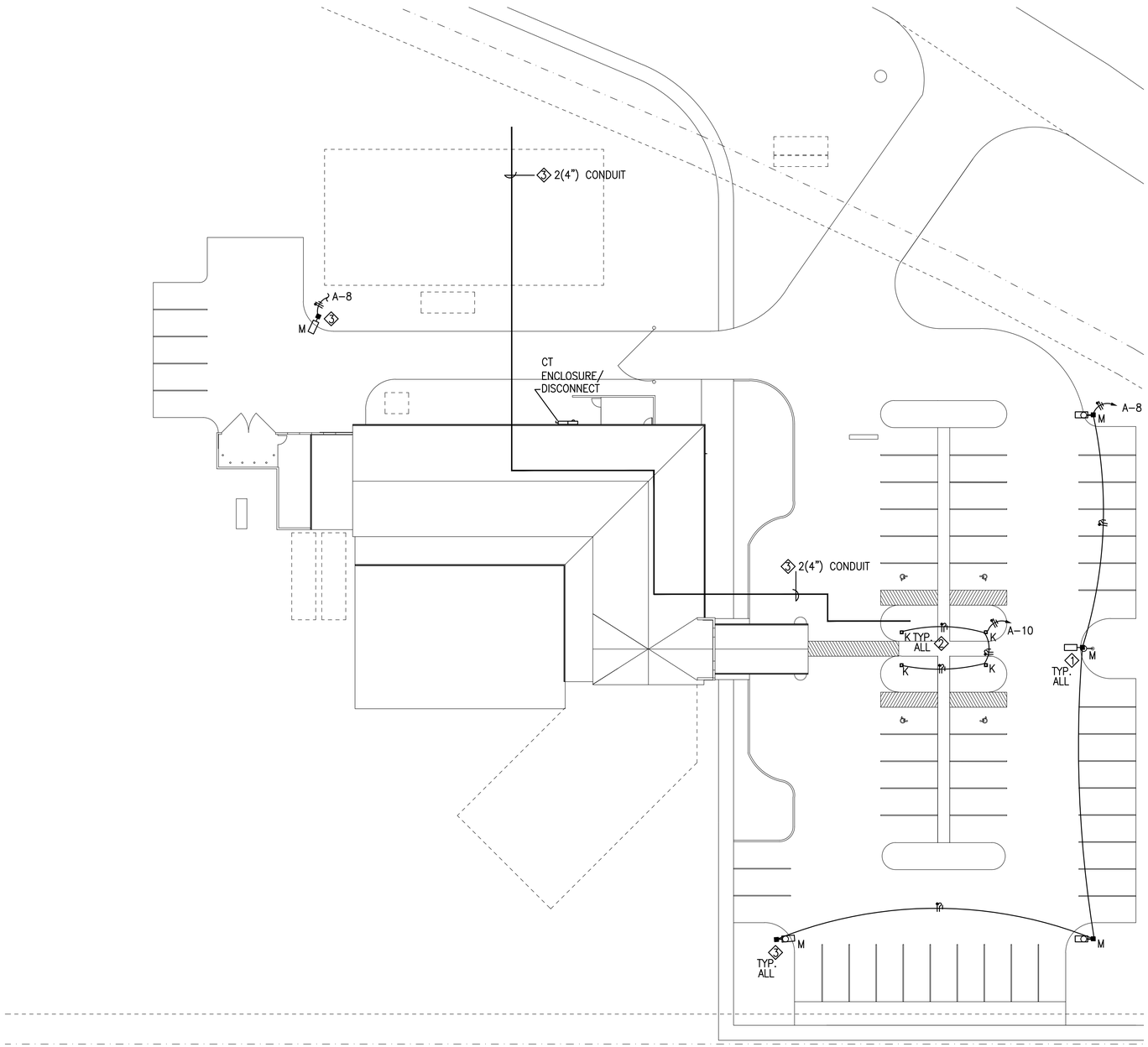

ELECTRICAL SITE UTILITY PLAN

SCALE: 1"=20'-0"

KEYED NOTES:◇

1. INSTALL SITE POLE FIXTURE, CONTROLLED THROUGH FACTORY INSTALLED PHOTOCELL.
2. INSTALL BOLLARD AT CROSSWALK, CONTROLLED THROUGH FACTORY INSTALLED PHOTOCELL.
3. INSTALL TWO 4" CONDUIT WITH PULL STRING FOR FUTURE SOLAR. ROUTE CONDUIT FROM ELECTRICAL ROOM TO LOCATION SHOWN. PROVIDE NEMA 3R PEDESTRIAN RATE BOX A CONDUIT TERMINATION. FIELD COORDINATE LOCATION WITH ARCHITECT PRIOR TO INSTALL.

MECHANICAL & ELECTRICAL ENGINEERING, INC.
PROJECT #16148

SANTA FE:
1222 Luisa St. Suite B
Santa Fe, New Mexico 87505
505/983-2389

ALBUQUERQUE:
8417 Washington Pl., NE
Albuquerque, NM 87113
505/856-1899

P:	FP:	M:	E:

10/20/17
KARL M. TIPTON
NEW MEXICO
21200
PROFESSIONAL ENGINEER

autotroph
architecture.planning.sustainable design consulting

No.	Description	Date

Hwy 14 Senior Center

ELECTRICAL SITE PLAN

Project Number	1606
Date	10.20.17
Drawn By	LT
Checked By	KT

ES1.1

GENERAL NOTES:

A. COORDINATE EXACT LIGHTING FIXTURE LOCATION AND MOUNTING HEIGHTS WITH ARCHITECTURAL REFLECTED CEILING PLANS.

KEYED NOTES: ◇

1. EXTEND CONDUIT AND WIRING FOR EM/EXIT LIGHT TO UNSWITCHED LIGHTING CIRCUIT.
2. INSTALL NEW OCCUPANCY SENSOR CONTROLLER AND NEW WALL SWITCH SEE SHEET E700 FOR OCCUPANCY SENSOR DETAILS.

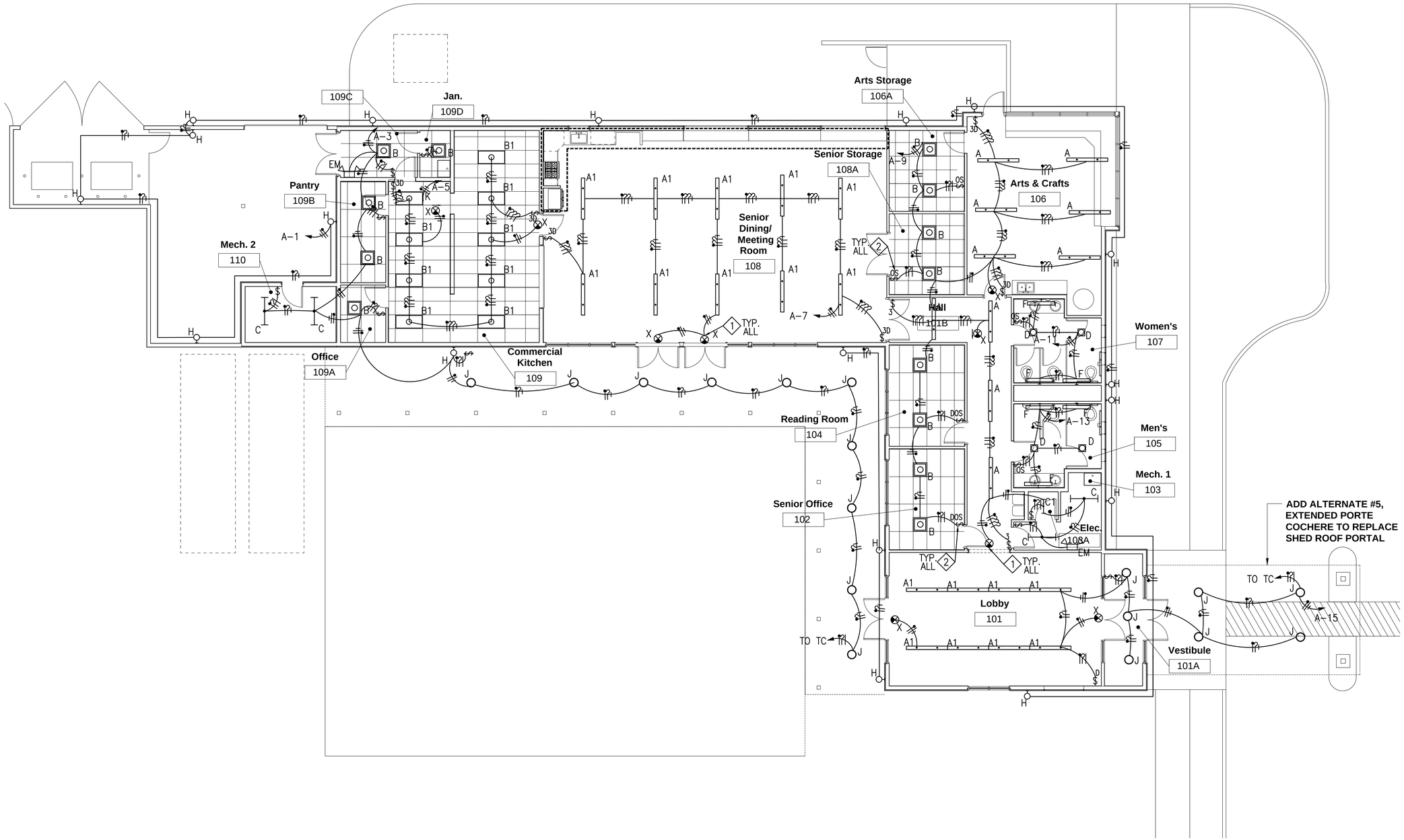

ELECTRICAL FLOOR PLAN - LIGHTING

SCALE: 1/8" = 1'-0"

MECHANICAL & ELECTRICAL ENGINEERING, INC.
PROJECT #16148

SANTA FE:
1222 Luisa St. Suite B
Santa Fe, New Mexico 87505
505/983-2389

ALBUQUERQUE:
8417 Washington Pl., NE
Albuquerque, NM 87113
505/856-1699

P: FP: M: E:

10/20/17 KARL M. TIPTON NEW MEXICO 21200 PROFESSIONAL ENGINEER

autotroph
architecture.planning.sustainable design consulting

No.	Description	Date

Hwy 14 Senior Center

ELECTRICAL FLOOR PLAN - LIGHTING

Project Number	1606
Date	10.20.17
Drawn By	LT
Checked By	KT

E1.1

KEYED NOTES:◇

1. INSTALL GFI RECEPTACLES MOUNTED ABOVE COUNTER AT 42". COORDINATE LOCATION WITH OWNER, PLUMBING FIXTURES, AND INTERIOR ELEVATION DETAILS ON ARCHITECTURAL SHEETS.
2. PROVIDE 18"X18" NEMA 3R BOX FOR DATA UTILITY COMPANY CONNECT.
3. INSTALL 48X48" BACKBOARD FOR DATA/TELEPHONE SYSTEMS. FIELD COORDINATE INSTALLATION WITH DATA CONTRACTOR PRIOR TO INSTALL.
4. PROVIDE 50, 208V FUSED DISCONNECT USE 3-#6 CU AND 1-#10 CU AND IN 1" CONDUIT. FIELD COORDINATE KILN LOCATION WITH ARCHITECT PRIOR TO INSTALL.
5. INSTALL SECTION BOX FOR DOOR OPENERS. FIELD COORDINATE PUSH BUTTON HEIGHT WITH ARCHITECT.

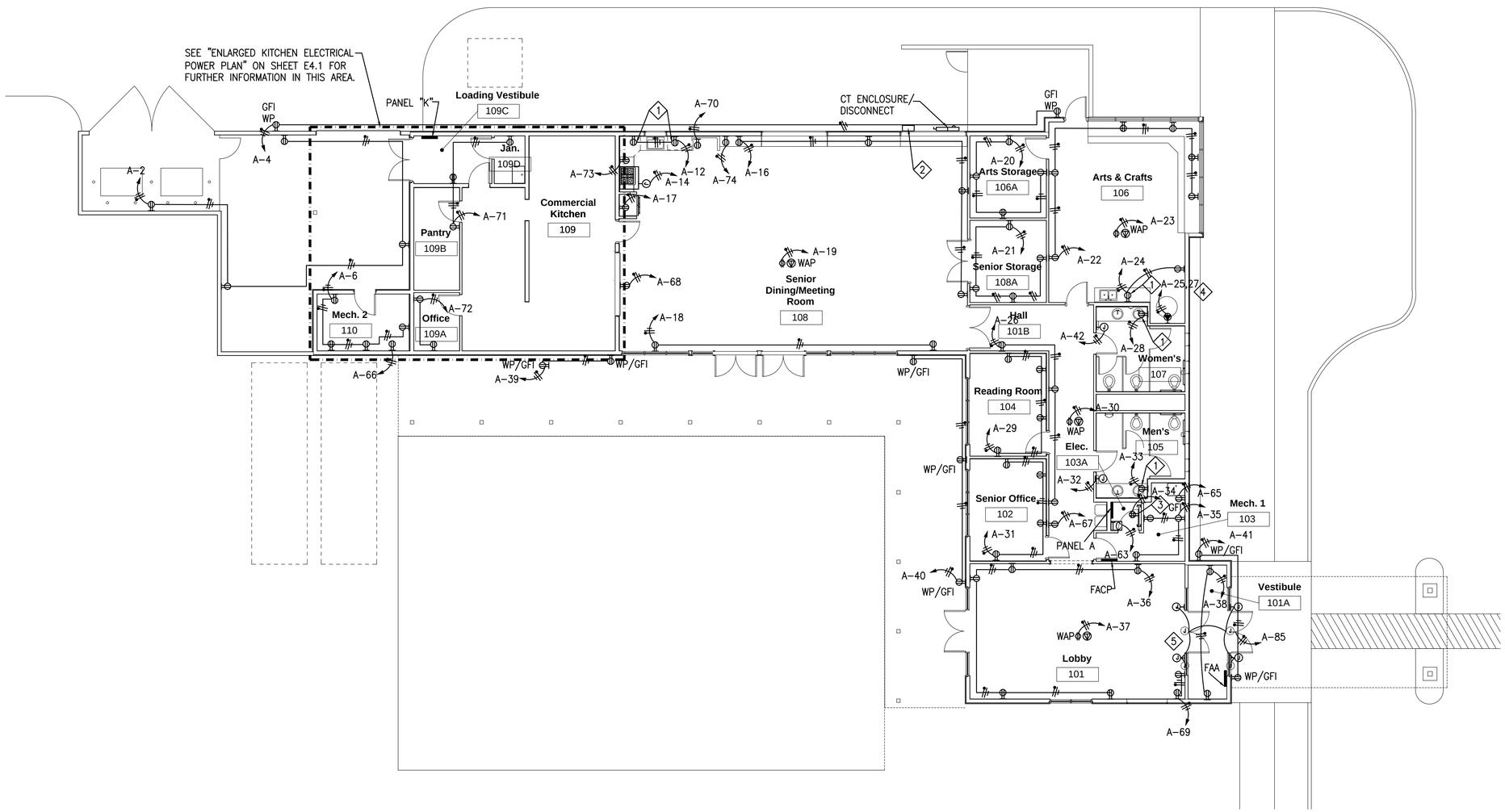

ELECTRICAL FLOOR PLAN - POWER

SCALE: 1/8" = 1'-0"

MECHANICAL & ELECTRICAL ENGINEERING, INC.
PROJECT #16148
SANTA FE:
1222 Luisa St. Suite B
Santa Fe, New Mexico 87505
505/983-2389
ALBUQUERQUE:
8417 Washington Pl., NE
Albuquerque, NM 87113
505/856-1699

P:	FP:	M:	E:

10/20/17 KARL M. TIPTON NEW MEXICO 21200 PROFESSIONAL ENGINEER

autotroph
architecture.planning.sustainable design consulting

No.	Description	Date

Hwy 14 Senior Center

ELECTRICAL FLOOR PLAN - POWER

Project Number	1606
Date	10.20.17
Drawn By	LT
Checked By	KT

E1.2

KEYED NOTES:◇

1. EXTEND 3/4"C TO RESPECTIVE A/C UNIT. COORDINATE WITH MECHANICAL DRAWINGS
2. INSTALL 15A/2P, 208V, HD, FUSED DISCONNECT SWITCH. EXTEND CONDUIT FROM DISCONNECT TO PANEL INDICATED. DISCONNECT TO COMPLY WITH NEC WORKING CLEARANCES AND OWNER REQUIREMENTS. USE 3–10CU WITH 1–#10CU GND IN 3/4" CONDUIT.
3. INSTALL 70A/3P, 208V, HD, FUSED STARTER/DISCONNECT SWITCH. EXTEND CONDUIT FROM DISCONNECT TO PANEL INDICATED. DISCONNECT TO COMPLY WITH NEC WORKING CLEARANCES AND OWNER REQUIREMENTS. USE 4–#4CU WITH 1–#8CU GND IN 1.25" CONDUIT.
4. INSTALL 20A/1P, 120V MEANS NECESSARY MEANS OF DISCONNECT PER NEC.
5. INSTALL 20A/2P, 208V, HD, FUSED DISCONNECT SWITCH. EXTEND CONDUIT FROM DISCONNECT TO PANEL INDICATED. DISCONNECT TO COMPLY WITH NEC WORKING CLEARANCES AND OWNER REQUIREMENTS. USE 3–12CU WITH 1–#12CU GND IN 3/4" CONDUIT.
6. INSTALL 20A/3P, 208V, HD, FUSED DISCONNECT SWITCH. EXTEND CONDUIT FROM DISCONNECT TO PANEL INDICATED. DISCONNECT TO COMPLY WITH NEC WORKING CLEARANCES AND OWNER REQUIREMENTS. USE 4–12CU WITH 1–#12CU GND IN 3/4" CONDUIT.

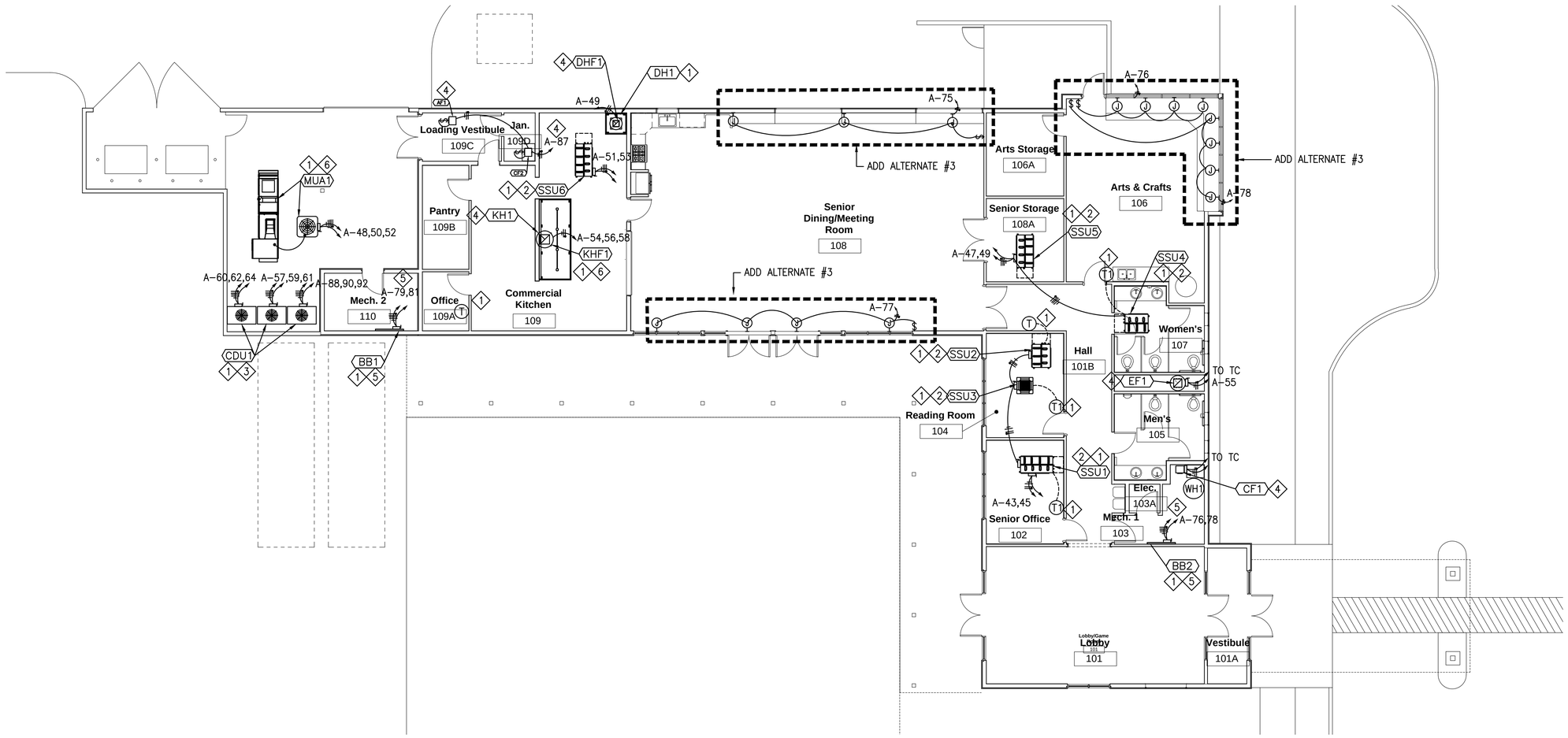

ELECTRICAL FLOOR PLAN - MECHANICAL POWER

SCALE: 1/8" = 1'-0"

MECHANICAL & ELECTRICAL ENGINEERING, INC.
PROJECT #16148

SANTA FE:
1222 Luisa St. Suite B
Santa Fe, New Mexico 87505
505/983-2389

ALBUQUERQUE:
8417 Washington Pl., NE
Albuquerque, NM 87113
505/856-1699

P:	FP:	M:	E:

10/20/17
KARL M. TIPTON
NEW MEXICO
21200
PROFESSIONAL ENGINEER

autotroph
architecture.planning.sustainable design consulting

No.	Description	Date

Hwy 14 Senior Center

ELECTRICAL FLOOR PLAN - MECHANICAL POWER

Project Number	1606
Date	10.20.17
Drawn By	LT
Checked By	KT

E1.3

KEYED NOTES: ◇

1. INSTALL 48"X48" PLYWOOD BACKBOARD FOR DATA/TELECOM. FIELD COORDINATE INSTALL WITH PROVIDER.
2. INSTALL TO 12"X12" NEMA 3R ENCLOSURE FOR DATA/TELECOM. FIELD COORDINATE INSTALL WITH LOCAL PROVIDER.

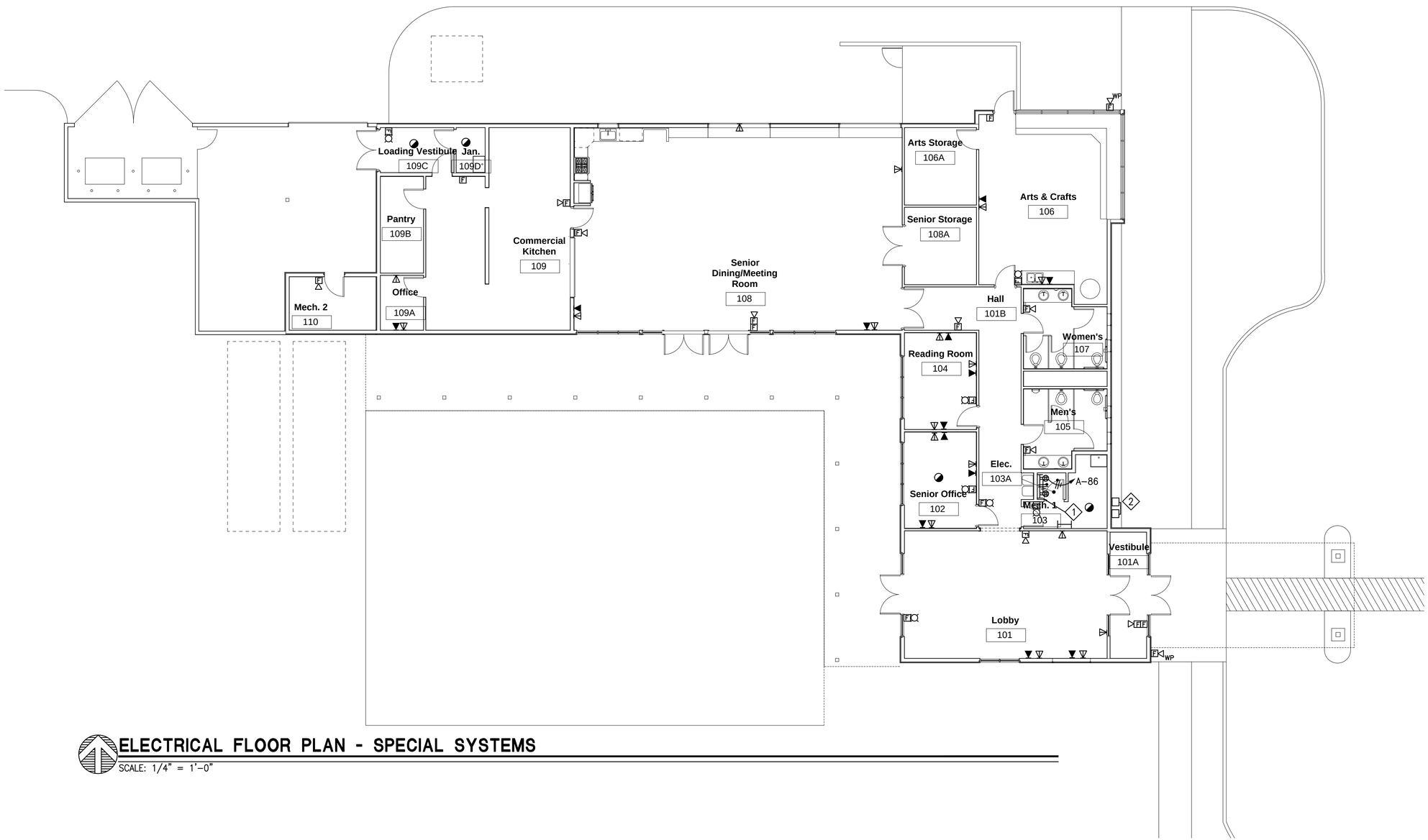

ELECTRICAL FLOOR PLAN - SPECIAL SYSTEMS

SCALE: 1/4" = 1'-0"

MECHANICAL & ELECTRICAL ENGINEERING, INC.
PROJECT #16148

SANTA FE:
1222 Luisa St. Suite B
Santa Fe, New Mexico 87505
505/983-2389

ALBUQUERQUE:
8417 Washington Pl., NE
Albuquerque, NM 87113
505/856-1699

P:	FP:	M:	E:

10/20/17
KARL M. TIPTON
NEW MEXICO
21200
PROFESSIONAL ENGINEER

autotroph
architecture.planning.sustainable design consulting

No.	Description	Date

Hwy 14 Senior Center

ELECTRICAL FLOOR PLAN - SPECIAL SYSTEMS

Project Number	1606
Date	10.20.17
Drawn By	LT
Checked By	KT

E1.4

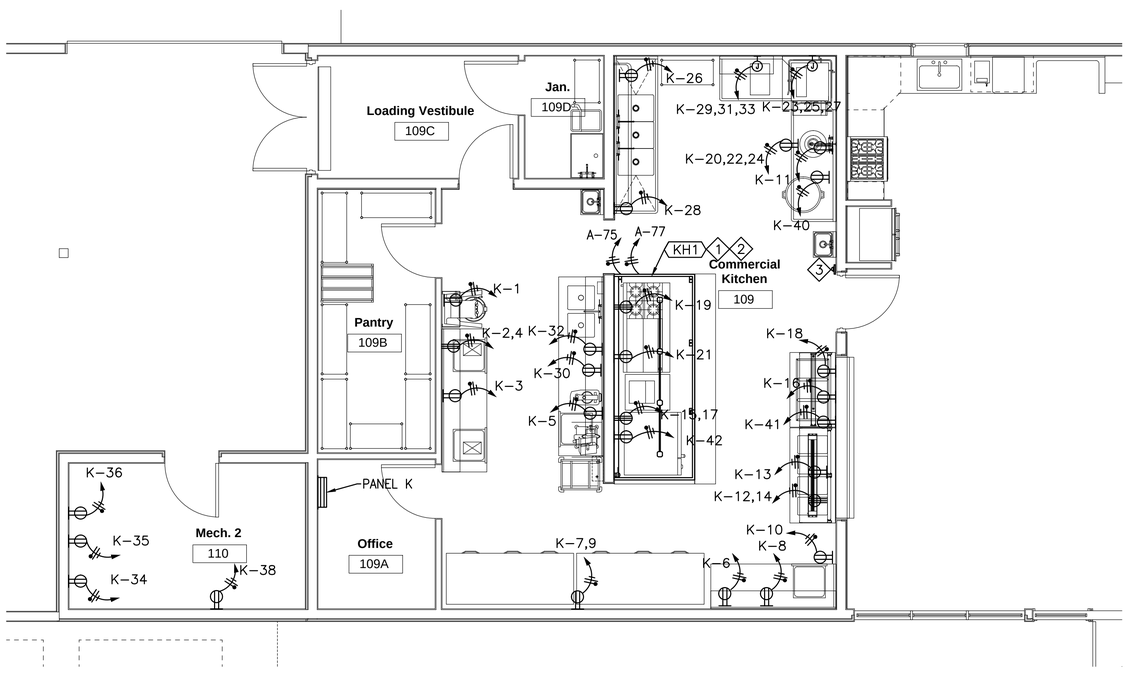

ELECTRICAL FLOOR PLAN - ENLARGED KITCHEN

SCALE: 1/4" = 1'-0"

GENERAL NOTES:

A. COORDINATE ALL CONNECTION REQUIREMENTS WITH KITCHEN EQUIPMENT SUPPLIER/CONTRACTOR. PROVIDE WATERPROOF FLEXIBLE CONNECTIONS FOR ALL DIRECT CONNECT EQUIPMENT. FURNISH AND INSTALL CORDS WITH CORD CAPS AND MATCHING RECEPTACLES WITH NEMA CONFIGURATION TO MATCH WHEN REQUIRED.

B. MOUNTING HEIGHT OF OUTLETS SHALL BE COORDINATED WITH ARCHITECTURAL DETAILS AND SECTIONS PRIOR TO ROUGH-IN OF BOXES AND CONDUIT.

C. REFER TO KITCHEN CONSULTANT DRAWINGS FOR ADDITIONAL REQUIREMENTS AND COMPLY AS REQUIRED.

KEYED NOTES: ◇

1. ALL ELECTRICAL DEVICES UNDER COOKING HOOD SHALL BE CONNECTED TO SHUNT-TRIP CIRCUIT BREAKERS CONTROLLED BY THE HOOD FIRE PROTECTION SYSTEM.

2. CONNECT EXHUAST MAKE UP AIR UNIT CONTROL WIRE AND LIGHTING POWER. PROVIDE 3/4" CONDUIT WITH PULL STRING FROM CONTROLL PANEL TO ALL ASSOCIATED EQUIPMENT.

3. INSTALL EMERGENCY PUSH BUTTON SHUT OFF SWITCH CONNECT TO HOOD CONTROL PANEL FOR CONTROL OF GAS VALVE AND SHUNT TRIP CIRCUIT BREAKER.

MECHANICAL & ELECTRICAL ENGINEERING, INC.
PROJECT #16148

SANTA FE:
1222 Luisa St. Suite B
Santa Fe, New Mexico 87505
505/983-2389

ALBUQUERQUE:
8417 Washington Pl., NE
Albuquerque, NM 87113
505/856-1699

P:	FP:	M:	E:

10/20/17
KARL M. TIPTON
NEW MEXICO
21200
PROFESSIONAL ENGINEER

autotroph
architecture.planning.sustainable design consulting

No.	Description	Date

Hwy 14 Senior Center

ENLARGED KITCHEN ELECTRICAL POWER PLAN

Project Number	1606
Date	10.20.17
Drawn By	LT
Checked By	KT

E4.1

NEW PANEL "A" SECTION 1

Load Description	Cat #	Brkr Size	poles	CCT #	Phase A Load	Phase B Load	Phase C Load	CC T #	poles	Brkr Size	Cat #	Load Description
LIGHTING	1	20	1	1	222							
					720			2	1	20	2	RECEPTACLES
LIGHTING	1	20	1	3		477						
						360		4	1	20	2	RECEPTACLES
LIGHTING	1	20	1	5			903					
							720	6	1	20	2	RECEPTACLES
LIGHTING	1	20	1	7	171							
					540			8	1	20	2	RECEPTACLES
LIGHTING	1	20	1	9		518						
						360		10	1	20	2	RECEPTACLES
LIGHTING	1	20	1	11			169					
							360	12	1	20	2	RECEPTACLES
LIGHTING	1	20	1	13	169							
					360			14	1	20	2	RECEPTACLES
LIGHTING	1	20	1	15		290						
						720		16	1	20	2	RECEPTACLES
RECEPTACLES	2	20	1	17			360					
							540	18	1	20	2	RECEPTACLES
RECEPTACLES	2	20	1	19	360							
					540			20	1	20	2	RECEPTACLES
RECEPTACLES	2	20	1	21		720						
						1080		22	1	20	2	RECEPTACLES
RECEPTACLES	2	20	1	23			360					
							360	24	1	20	2	RECEPTACLES
RECEPTACLES	2	50	1	25	4097							
					540			26	1	20	2	RECEPTACLES
	2	50	1	27		4097						
						360		28	1	20	2	RECEPTACLES
RECEPTACLES	2	20	1	29			720					
							360	30	1	20	2	RECEPTACLES
RECEPTACLES	2	20	1	31	720							
					360			32	1	20	2	RECEPTACLES
RECEPTACLES	2	20	1	33		360						
						180		34	1	20	2	RECEPTACLES
RECEPTACLES	2	20	1	35			540					
							1080	36	1	20	2	RECEPTACLES
RECEPTACLES	2	20	1	37	360							
					360			38	1	20	2	RECEPTACLES
RECEPTACLES	2	20	1	39		360						
						540		40	1	20	2	RECEPTACLES
RECEPTACLES	2	20	1	41			360					
							360	42	1	20	2	RECEPTACLES
		Total VA			9519	10422	7192					

Load Category	Connected	Dmd %	Demand
1.) Lighting	2919	1.25	3648.75
2.) Receptacles	10000	1	10000
	23154	0.5	11577
3.) Motor	0	1.25	0
	74368	1	74368
4.) Sub - Panels	30600	1	30600
Total	141041		130193.75

Feeder Size	SEE RISER
Connected kVA	141.04
Demand kVA	130.19
Connected Amps	392
Demand Amps	362

FED FROM UTILITY
PER NEC: ALL MULTIWIRE BRANCH CIRCUITS SHALL
BE PROVIDED WITH MULTIPOLE CIRCUIT BREAKERS
PROVIDE SUBFEED CIRCUIT BREAKER SIZED AS SHOWN
FOR ELECTRICAL EQUIPMENT
PROVIDE HACR TYPE CIRCUIT BREAKERS FOR MECH EQUIPMENT
PROVIDE SWD TYPE CIRCUIT BREAKERS FOR LIGHTING CIRCUITS

PANEL "A", 120/208V, 3 PHASE, 4 WIRE
600AMP, MLO FUSED A 500,102 CIRCUIT, SURFACE MOUNT,
NEMA 1 ENCLOSURE, TOP/BOTTOM FEED, DOOR-IN-DOOR

NEW PANEL "A" SECTION 2

Load Description	Cat #	Brkr Size	poles	CC T #	Phase A Load	Phase B Load	Phase C Load	CC T #	poles	Brkr Size	Cat #	Load Description
SSU1-3	3	30	2	43	1268							
					500			44	2	20	3	DHF1
	3	30	2	45		1268						
						500		46	1	20	3	
SSU4-5	3	30	2	47			1404					
							864	48	3	20	3	MUA1
	3	30	2	49	1404							
					864			50	3	20	3	
SSU6	3	30	2	51		1123						
						864		52	3	20	3	
	3	30	2	53			1123					
							500	54	3	20	3	KHF1
EF1	3	20	1	55	600							
					500			56	3	0	3	
CDU1	3	70	3	57		6600						
						500		58	3	0	3	
	3	70	3	59			6600					
							6600	60	3	70	3	CDU1
	3	70	3	61	6600							
					6600			62	3	70	3	
TIME CLOCK	3	20	1	63		300						
						6600		64	3	70	3	
WH1	2	30	1	65			2000					
							2000	66	1	30	2	WH
WATER FOUNTAIN	2	20	1	67	500							
					500			68	1	20	2	ROLLING KITCHEN DOOR
RECEPTACLE	2	20	1	69		360						
						1000		70	1	20	2	KITCHENETTE FRIDGE
RECEPTACLES	2	20	1	71			540					
							360	72	1	20	2	RECEPTACLES
RECEPTACLES	2	20	1	73	180							
					180			74	1	20	2	RECEPTACLES
SPARE				75								
						1000		76	2	20	3	BB2
KH CONTROLS	3	20	1	77			1000					
							1000	78	2	20	3	
BB1	3	20	2	79	1000							
								80	1	20		FUTURE SOLAR
	3	20	2	81		1000						
								82	1	20		FUTURE SOLAR
SPARE		20	1	83								
								84	1	20		FUTURE SOLAR
		Total Watts			20696	21115	23991					

NEW PANEL "A" SECTION 3

Load Description	Cat #	Brkr Size	poles	CCT #	Phase A Load	Phase B Load	Phase C Load	CCT #	poles	Brkr Size	Cat #	Load Description
RECEPTACLES	2	20	1	85	600							
					720			86	1	20	2	RECEPTACLES
PANEL B	4	150	3	87		10200						
						6600		88	3	70	3	CUD1
	4	150	3	89			10200					
							6600	90	3	70	3	
	4	150	3	91	10200							
					6600			92	3	70	3	
SPACE		20	1	93								
								94		0		SPACE
SPACE		20	1	95								
								96		0		SPACE
SPACE		20	1	97								
								98		0		SPACE
SPACE		20	1	99								
								100		0		SPACE
SPACE		20	1	101								
								102		0		
		Total Watts			18120	16800	16800					

NEW PANEL "K" SECTION 1

Load Description	Cat #	Brkr Size	poles	CCT #	Phase A Load	Phase B Load	Phase C Load	CC T #	poles	Brkr Size	Cat #	Load Description
FUTURE APPLIANCE	2	20	1	1	1000							
					728			2	2	20	2	MIXER
FUTURE APPLIANCE	2	20	1	3		1000						
						728		4	2	20	2	
RECEPTACLES	2	20	1	5			1000					
							1000	6	1	20	2	REFRIGERATOR
FREEZER	2	20	2	7	839							
					1000			8	1	30	2	HEATED CABINET
	2	20	2	9		839						
						1000		10	1	30	2	RECEPTACLES
RECEPTACLES	2	20	1	11			480					
							1706	12	2	30	2	SERVING COUNTER
RECEPTACLES	2	20	1	13	1000							
					1706			14	2	30	2	
COMBINATION OVEN	2	20	2	15		936						
						180		16	1	20	2	RECEPTACLES
	2	20	2	17			936					
							180	18	1	20	2	RECEPTACLES
EQUIPMENT STAND	2	20	1	19	936							
					936			20	3	20	2	DISPOSAL
EXAUST HOOD	2	20	1	21		936						
						936		22	3	20	2	
DISHWASHER	2	30	3	23			2496					
							936	24	3	20	2	
	2	30	3	25	2496							
					1520			26	1	40	2	TEA BREWER
	2	20	3	27		2496						
						4700		28	1	40	2	COFFEE BREWER
BOOSTER HEATER	2	40	3	29			3016					
							1000	30	1	20		RECEPTACLES
	2	40	3	31	3016							
					1000			32	1	20		RECEPTACLES
	2	40	3	33		3016						
						1000		34	1	20	2	SOFTENERS RECEPT
REVERSE OSMOSIS UNIT RECEPT	2	20	1	35			1000					
							1000	36	1	20	2	DELIVERY PUMP RECEPT
SOFTENERS #2 RECEPT	2	20	1	37	1000							
					1000			38	1	20	2	REVERSE OSMOSIS UNIT #2 RECEPT
DELIVERY PUMP #2 RECEPT	2	20	1	39		1000						
						360		40	1	20		RECEPTACLES
MERCHANDISER	2	20	1	41			1000					
							180	42	1	20	2	RECEPTACLES
		Total VA			18177	19127	15890					

Load Category	Connected	Dmd %	Demand
1.) Lighting	0	1.25	0
2.) Receptacles	10000	1	10000
	40874	0.5	20437
3.) Motor	0	1.25	0
	0	1	0
4.) Sub - Panels	0	1	0
Total	50874		30437

Feeder Size	SEE RISER
Connected kVA	50.87
Demand kVA	30.44
Connected Amps	141
Demand Amps	85

FED FROM MDP
PER NEC: ALL MULTIWIRE BRANCH CIRCUITS SHALL
BE PROVIDED WITH MULTIPOLE CIRCUIT BREAKERS
PROVIDE SUBFEED CIRCUIT BREAKER SIZED AS SHOWN
FOR ELECTRICAL EQUIPMENT
PROVIDE HACR TYPE CIRCUIT BREAKERS FOR MECH EQUIPMENT
PROVIDE SWD TYPE CIRCUIT BREAKERS FOR LIGHTING CIRCUITS

PANEL "K", 120/208V, 3 PHASE, 4 WIRE
200AMP, MCB,42 CIRCUIT, SURFACE MOUNT,
NEMA 1 ENCLOSURE, TOP/BOTTOM FEED, DOOR-IN-DOOR

NEW PANEL "K" SECTION 2

Load Description	Cat #	Brkr Size	pole s	CC T #	Phase A Load	Phase B Load	Phase C Load	CC T #	pole s	Brkr Size	Ca t #	Load Description
SPACE		0		43								
								44		20		SPACE
SPACE		0		45								
								46		0		SPACE
SPACE		0		47								
								48		0		SPACE
SPACE		0		49								
								50		0		SPACE
SPACE		0		51								
								52		0		SPACE
SPACE		0		53								
								54		0		SPACE
SPACE		0		55								
								56		0		SPACE
		Total Watts			0	0	0					

FEEDER SCHEDULE

SCALE: NOT TO SCALE

KEY	DESCRIPTION	PHASE CONDUCTORS	NEUTRAL	EQUIP GROUND	ISOLATED GROUNDING CONDUCTOR	GROUNDING ELECTRODE CONDUCTOR	CONDUIT
A	400A 3Ø 208V	(2)3- #400 AL	(2)1- #400 AL	(2)3-#1 CU			(2)3"
B	200A 3Ø 208V	3- #300 AL	1- #300 AL	3-#2 CU			3"

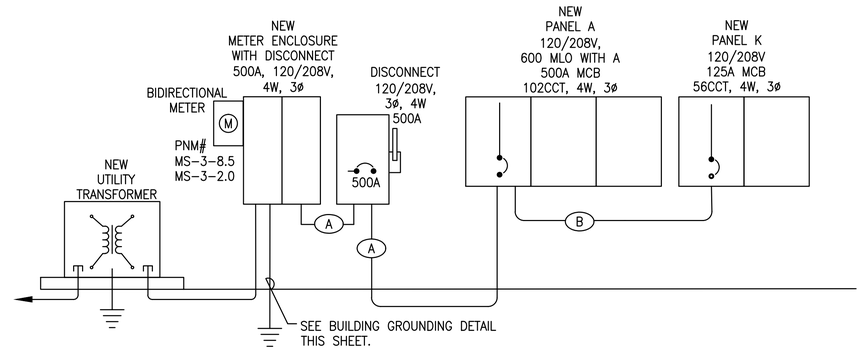

ELECTRICAL RISER DIAGRAM - NEW WORK

SCALE: NOT TO SCALE

SHORT CIRCUIT ANALYSIS - THREE PHASE SYSTEM - 120/208VOLT
ASSUME THE BUILDING TRANSFORMER IS 150 KVA WITH UNLIMITED PRIMARY SHORT CIRCUIT AMPS AND 2 PERCENT IMPEDANCE. THE MAXIMUM LET THROUGH CURRENT AT THE SECONDARY TERMINALS OF THE TRANSFORMER IS : 20850 AMPS. THE MAXIMUM AVAILABLE FAULT AT THE MAIN FUSIBLE DISCONNECT WILL BE APPROXIMATELY 11132.48 AMPS. THE MAXIMUM AVAILABLE FAULT AT THE CLOSEST PANELBOARD WILL BE LESS THAN 22,000 AMPS USING TYPE JJN FUSES IN THE MAIN SWITCH. ALL NEW PANELBOARDS SHALL BE RATED A MINIMUM OF 22,000 AMPS
THE ABOVE INFORMATION INDICATES A WORSE CASE SCENARIO. ALL OTHER SERVICES SHALL BE RATED AT 10,000 AIC.

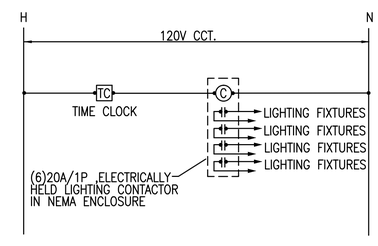

LIGHTING TIME CLOCK CONTROL DIAGRAM

NOT TO SCALE

MECHANICAL & ELECTRICAL ENGINEERING, INC.
PROJECT #16148
SANTA FE:
1222 Luisa St. Suite B
Santa Fe, New Mexico 87505
505/983-2389
ALBUQUERQUE:
8417 Washington Pl., NE
Albuquerque, NM 87113
505/856-1699
P: FP: M: E:

10/20/17
KARL M. TIPTON
NEW MEXICO
21200
PROFESSIONAL ENGINEER

autotroph
architecture.planning.sustainable design consulting

No.	Description	Date

Hwy 14 Senior Center

ELECTRICAL RISER DIAGRAM AND PANEL SCHEDULES

Project Number	1606
Date	10.20.17
Drawn By	LT
Checked By	KT

E5.1

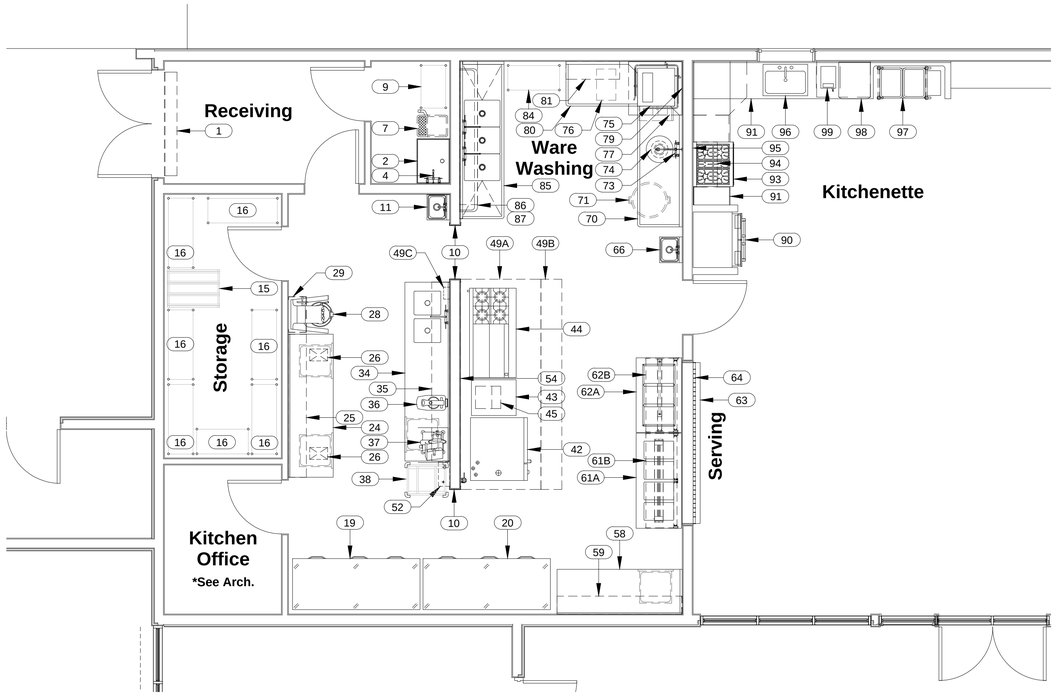

D4 FOODSERVICE PLAN
1/4"=1'-0"

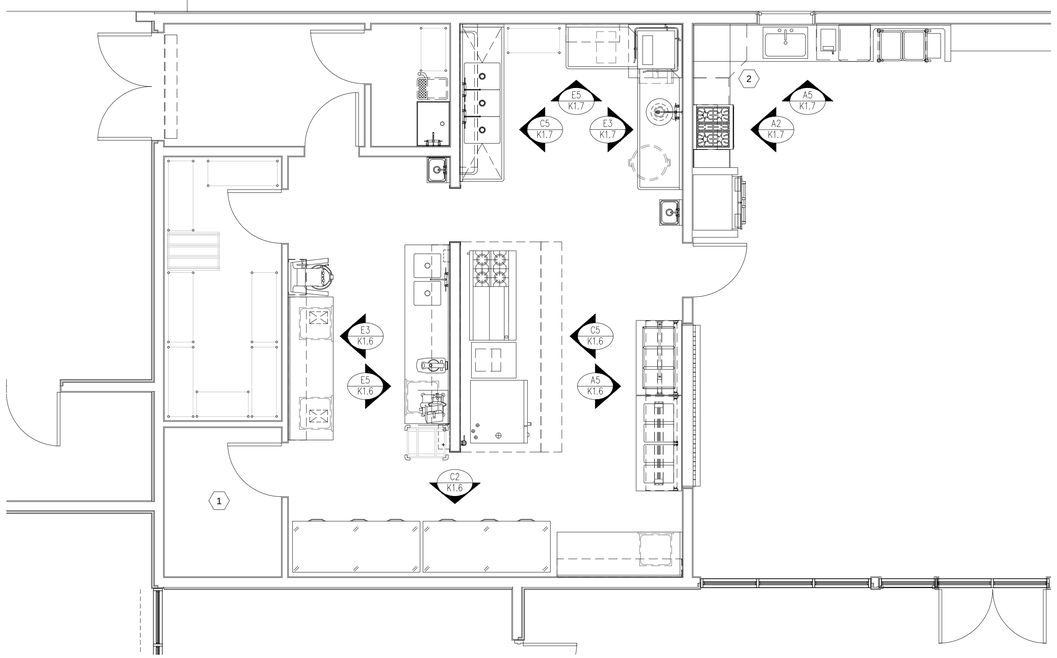

A4 ELEVATION MARKER PLAN
1/4"=1'-0"

GENERAL NOTES:

A. ITEM NUMBERS REFER TO FOODSERVICE EQUIPMENT SCHEDULE. SEE SHEETS K1.8 AND K1.9 FOR EQUIPMENT SOURCE AND UTILITIES.

B. THIS DRAWING IS PROVIDED AS A REFERENCE FOR THE PLACEMENT OF FOODSERVICE EQUIPMENT.

C. MILLWORK AND OTHERS EQUIPMENT SUPPLIED "BY OTHERS" IS SHOWN FOR REFERENCE ONLY. SEE ARCHITECTURAL PLANS AND SPECIFICATION.

D. ALL DIMENSIONS ARE FINISHED DIMENSIONS, UNLESS OTHERWISE NOTED.

E. REPORT ALL DISCREPANCIES PRIOR TO COMMENCING WORK.

KEYNOTES:

1. SEE ARCHITECTURAL PLANS FOR OFFICE INFORMATION.

2. SEE ARCHITECTURAL PLANS FOR KITCHENETTE INFORMATION.

SHEET INDEX:

K1.1 FOODSERVICE PLAN
K1.2 ELECTRICAL ROUGH-INS
K1.3 PLUMBING AND GAS ROUGH-INS
K1.4 WASTE ROUGH-INS
K1.5 HOOD PLAN
K1.6 ELEVATIONS
K1.7 ELEVATIONS
K1.8 EQUIPMENT UTILITY SCHEDULE
K1.9 EQUIPMENT UTILITY SCHEDULE

RDA ◦ DESIGN GROUP
Specializing in Foodservice Facility Planning, Design & Development
RDADesignGroup.com 505-898-3344

© RDA DESIGN GROUP / RDA-LTD, ALL RIGHTS RESERVED
This drawing is an instrument of service and the property of RDA Design Group and shall remain their property. The use of this drawing and the contents of this drawing shall be restricted to the original site for which it was prepared and publication (including reproduction) thereof is expressly limited to such.

CONSTRUCTION DOCUMENTS

autotroph
architecture.planning.sustainable design consulting

No.	Description	Date

Hwy 14 Senior Center

FOODSERVICE PLAN

Project Number	1606
Date	10.20.17
Drawn By	LMB
Checked By	AD

K1.1

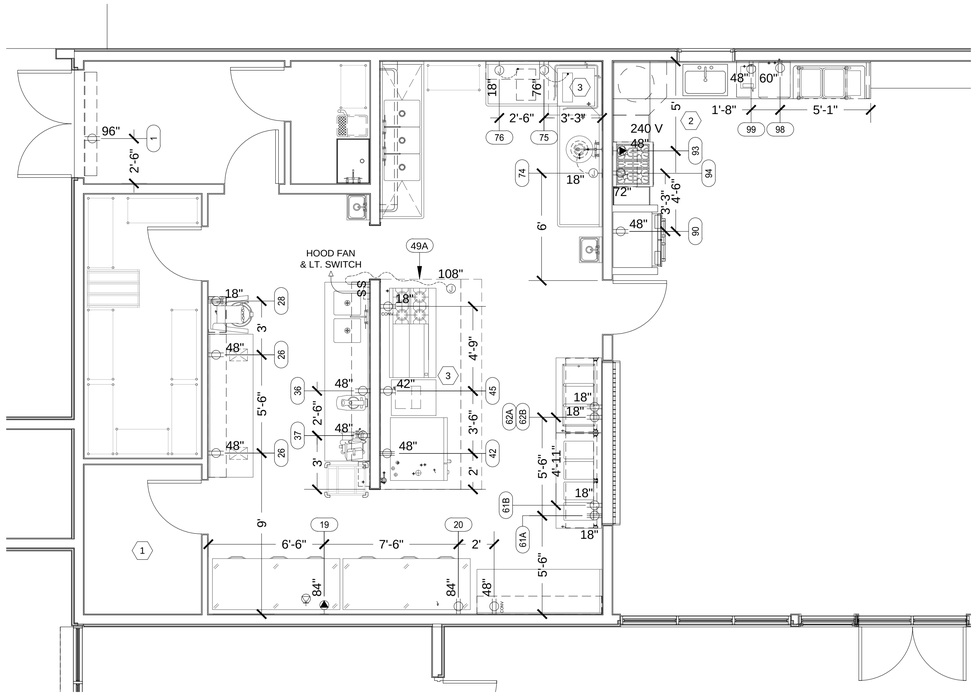

D4 FOODSERVICE PLAN
1/4"=1'-0"

UTILITY NOTES:

A. ROUGH-INS ARE FOR FOODSERVICE EQUIPMENT ONLY.

B. FOR ITEM NUMBERS SHOWN, REFER TO FOODSERVICE EQUIPMENT SCHEDULE.

C. ALL INTER-CONNECTIONS TO FOODSERVICE EQUIPMENT (PLUMBING, ELECTRICAL, MECHANICAL) ARE BY THE GENERAL CONTRACTOR AND HIS SUB-CONTRACTORS PER MANUFACTURERS RECOMMENDATIONS AND LOCAL CODES.

D. ELECTRICAL CONTRACTOR TO INTER-CONNECT POWER BETWEEN WALK-IN COOLER/FREEZER COMPRESSOR ON ROOF AND EVAPORATIVE COIL INSIDE WALK-IN. PROVIDE SEPARATE POWER FOR DEFROST TIME CLOCK AND THE HEAT TAPE THAT IS ON THE CONDENSATE DRAIN LINE IN THE WALK-IN FREEZER.

E. ELECTRICAL CONTRACTOR TO INTER-CONNECT DISPOSAL COMPONENTS WITH DISPOSAL CONTROL PANEL AND SOLENOID VALVE.

F. ALL CONTRACTORS SHALL HAVE THE REQUIRED LICENSES AND PERMITS TO PERFORM SPECIFIED WORK AND TO HAVE WORK ACCEPTED BY AUTHORIZED INSPECTORS.

G. KITCHEN EQUIPMENT CONTRACTOR (KEC) SHALL VERIFY ALL UTILITY REQUIREMENTS WITH GENERAL CONTRACTOR AND HIS SUB-CONTRACTORS AND SHALL PROVIDE TECHNICAL SUPPORT FOR FINAL CONNECTION REQUIREMENTS.

H. REPORT ALL DISCREPANCIES.

I. BTC = BRANCH TO CONNECTION.

KEYNOTES:

1. SEE ARCHITECTURAL PLANS FOR OFFICE INFORMATION.
2. SEE ARCHITECTURAL PLANS FOR KITCHENETTE INFORMATION.
3. SEE HOOD PLAN SHEET K1.4 FOR MORE INFORMATION.

ELECTRICAL SYMBOLS:

	120 VOLT RECEPTACLE
	208 VOLT RECEPTACLE
J	JUNCTION BOX
	CONVENIENCE OUTLET, 120 VOLT
	120 / 208 VOLT, 4-WIRE
DFC	DROP FROM CEILING
$	SWITCH

CONSTRUCTION DOCUMENTS

autotroph
architecture.planning.sustainable design consulting

No.	Description	Date

Hwy 14 Senior Center

ELECTRICAL ROUGH-INS

RDA ◦ DESIGN GROUP
Specializing in Foodservice Facility Planning, Design & Development
RDADesignGroup.com 505-898-3344

© RDA DESIGN GROUP / RDA-LTD, ALL RIGHTS RESERVED
This drawing is an instrument of service and the property of RDA Design Group and shall remain their property. The use of this drawing and the contents of this drawing shall be restricted to the original site for which it was prepared and publication (including reproduction) thereof is expressly limited to such.

Project Number	1606
Date	10.20.17
Drawn By	LMB
Checked By	AD

K1.2

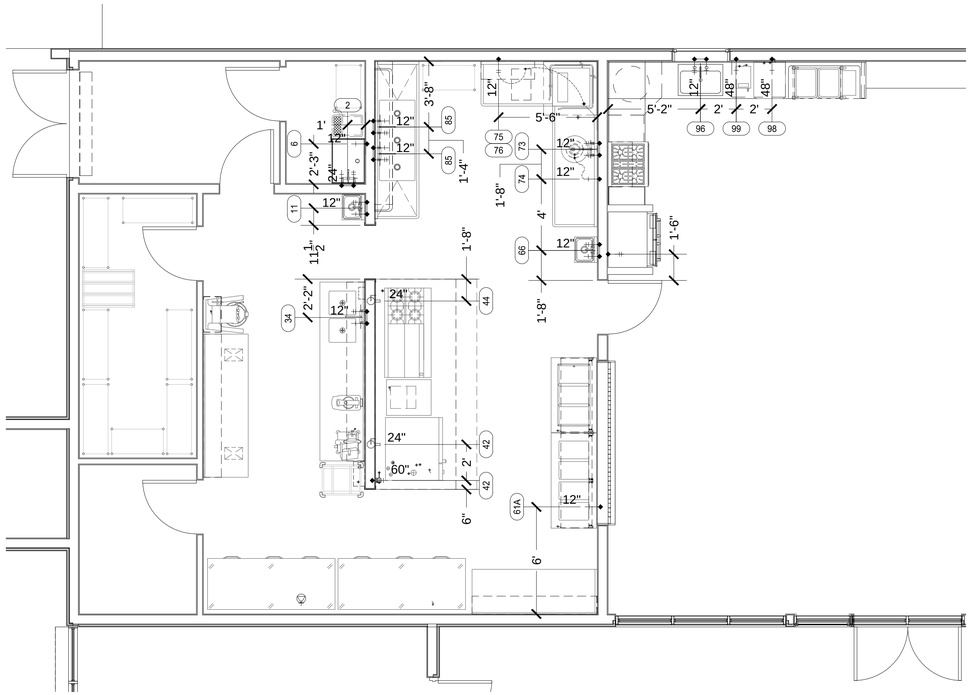

D4 PLUMBING, WASTE AND GAS ROUGH-INS
1/4"=1'-0"

UTILITY NOTES:

A. ROUGH-INS ARE FOR FOODSERVICE EQUIPMENT ONLY.

B. FOR ITEM NUMBERS SHOWN, REFER TO FOODSERVICE EQUIPMENT SCHEDULE.

C. ALL INTER-CONNECTIONS TO FOODSERVICE EQUIPMENT (PLUMBING, ELECTRICAL, MECHANICAL) ARE BY THE GENERAL CONTRACTOR AND HIS SUB-CONTRACTORS PER MANUFACTURERS RECOMMENDATIONS AND LOCAL CODES.

D. WASTE LINES FOR FOODSERVICE EQUIPMENT ARE NOT SUPPLIED WITH THE EQUIPMENT. LABOR AND MATERIALS FOR DRAIN LINES ARE TO BE SUPPLIED BY GENERAL CONTRACTORS.

E. IN-DIRECT WASTE LINES ARE TO EXTEND TO FLOOR SINK (FS-1) WITH NO REDUCTION IN LINE SIZE.

F. PLUMBING CONTRACTOR TO SUPPLY ALL STOPS & INTER-CONNECTING MATERIALS TO MAKE FINAL CONNECTIONS TO GAS EQUIPMENT WITHOUT REDUCTION IN LINE SIZE AND PER PLANS, SPECIFICATIONS AND LOCAL CODES.

G. ALL CONTRACTORS SHALL HAVE THE REQUIRED LICENSES AND PERMITS TO PERFORM SPECIFIED WORK AND TO HAVE WORK ACCEPTED BY AUTHORIZED INSPECTORS.

H. KITCHEN EQUIPMENT CONTRACTOR (KEC) SHALL VERIFY ALL UTILITY REQUIREMENTS WITH GENERAL CONTRACTOR AND HIS SUB-CONTRACTORS AND SHALL PROVIDE TECHNICAL SUPPORT FOR FINAL CONNECTION REQUIREMENTS.

I. REPORT ALL DISCREPANCIES.

J. BTC = BRANCH TO CONNECTION.

KEYNOTES:

1. SEE ARCHITECTURAL PLANS FOR KITCHENETTE INFORMATION.

PLUMBING SYMBOLS:

HOT & COLD WATER

HOT WATER

COLD WATER

GAS

CONSTRUCTION DOCUMENTS

autotroph
architecture.planning.sustainable design consulting

No.	Description	Date

Hwy 14 Senior Center

PLUMBING, WASTE AND GAS ROUGH-INS

RDA ◦ DESIGN GROUP
Specializing in Foodservice Facility Planning, Design & Development
RDADesignGroup.com 505-898-3344

© RDA DESIGN GROUP / RDA-LTD, ALL RIGHTS RESERVED
This drawing is an instrument of service and the property of RDA Design Group and shall remain their property. The use of this drawing and the contents of this drawing shall be restricted to the original site for which it was prepared and publication (including reproduction) thereof is expressly limited to such.

Project Number	1606
Date	10.20.17
Drawn By	LMB
Checked By	AD

K1.3

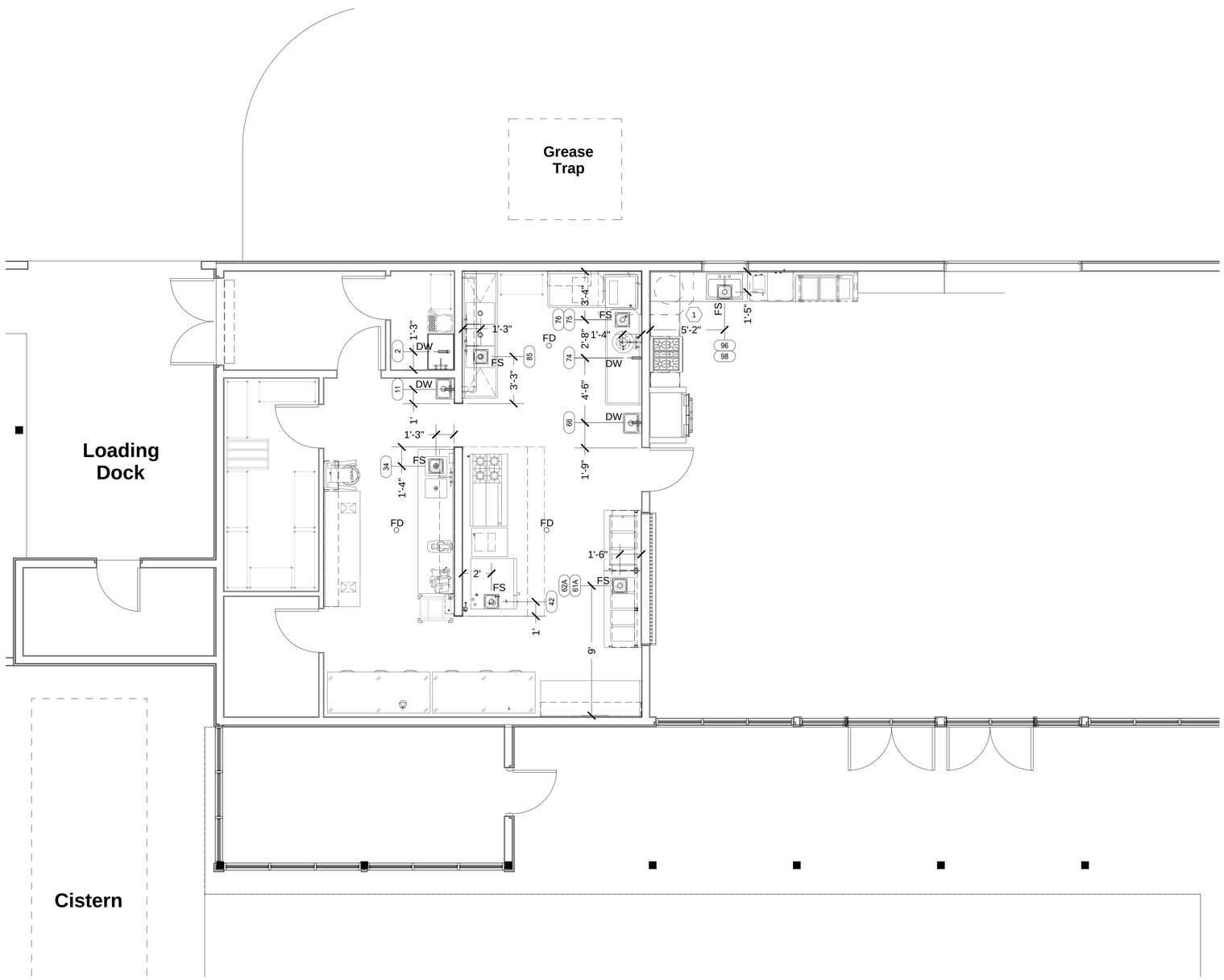

D4 PLUMBING AND GAS ROUGH-INS

1/4"=1'-0"

UTILITY NOTES:

A. ROUGH-INS ARE FOR FOODSERVICE EQUIPMENT ONLY.

B. FOR ITEM NUMBERS SHOWN, REFER TO FOODSERVICE EQUIPMENT SCHEDULE.

C. ALL INTER-CONNECTIONS TO FOODSERVICE EQUIPMENT (PLUMBING, ELECTRICAL, MECHANICAL) ARE BY THE GENERAL CONTRACTOR AND HIS SUB-CONTRACTORS PER MANUFACTURERS RECOMMENDATIONS AND LOCAL CODES.

D. WASTE LINES FOR FOODSERVICE EQUIPMENT ARE NOT SUPPLIED WITH THE EQUIPMENT. LABOR AND MATERIALS FOR DRAIN LINES ARE TO BE SUPPLIED BY GENERAL CONTRACTORS.

E. IN-DIRECT WASTE LINES ARE TO EXTEND TO FLOOR SINK (FS-1) WITH NO REDUCTION IN LINE SIZE.

F. ALL CONTRACTORS SHALL HAVE THE REQUIRED LICENSES AND PERMITS TO PERFORM SPECIFIED WORK AND TO HAVE WORK ACCEPTED BY AUTHORIZED INSPECTORS.

G. KITCHEN EQUIPMENT CONTRACTOR (KEC) SHALL VERIFY ALL UTILITY REQUIREMENTS WITH GENERAL CONTRACTOR AND HIS SUB-CONTRACTORS AND SHALL PROVIDE TECHNICAL SUPPORT FOR FINAL CONNECTION REQUIREMENTS.

H. REPORT ALL DISCREPANCIES.

I. BTC = BRANCH TO CONNECTION.

KEYNOTES:

1. SEE ARCHITECTURAL PLANS FOR KITCHENETTE INFORMATION.

WASTE SYMBOLS:

	DW	DIRECT WASTE
	FD	FLOOR DRAIN
	FS	FLOOR SINK, ¾ GRATE
	FT	FLOOR TROUGH
	HD	FLOOR DRAIN WITH HUB FUNNEL

CONSTRUCTION DOCUMENTS

autotroph
architecture.planning.sustainable design consulting

No.	Description	Date

Hwy 14 Senior Center

WASTE ROUGH-INS

Project Number	1606
Date	10.20.17
Drawn By	LMB
Checked By	AD

K1.4

RDA DESIGN GROUP

Specializing in Foodservice Facility Planning, Design & Development

RDADesignGroup.com 505-898-3344

© RDA DESIGN GROUP / RDA-LTD, ALL RIGHTS RESERVED
This drawing is an instrument of service and the property of RDA Design Group and shall remain their property. The use of this drawing and the contents of this drawing shall be restricted to the original site for which it was prepared and publication (including reproduction) thereof is expressly limited to such.

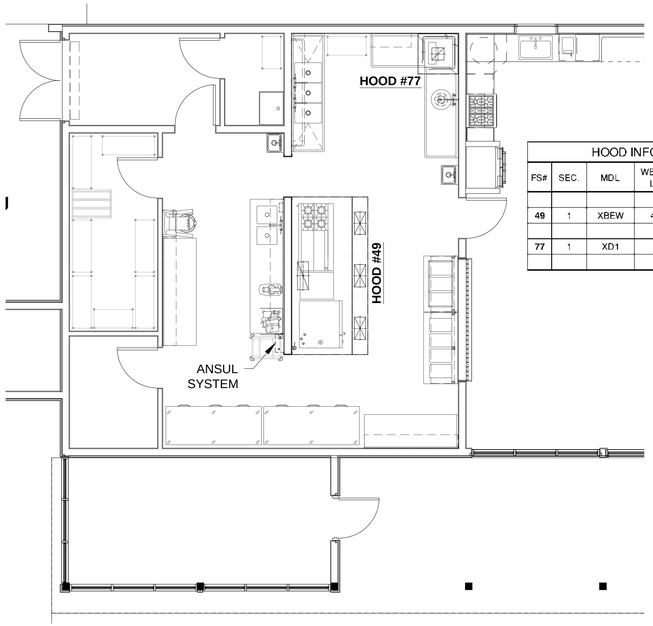

D2 OVERALL PLAN
3/16"=1'-0"

HOOD INFORMATION						EXHAUST PLENUM						SUPPLY PLENUM									
FS#	SEC.	MDL	WEIGHT LBS	LENGTH	WIDTH	QTY	COLLAR WIDTH	COLLAR LENGTH	EXHAUST CFM	EXHAUST SP	TEMP RATING	TYPE	SEC.	TOTAL LENGTH	QTY	WIDTH	HEIGHT	COLLAR WIDTH	COLLAR LENGTH	VOLUME CFM	SUPPLY SP
49	1	XBEW	437	145"	54"	1	10"	25"	2644	0.41	600°	ASP	1	138"	3	14"	10"	20"	10"	2588	0.13
77	1	XD1	84	36"	36"	1	11"	11"	450	0.462	NA	—	—	—	—	—	—	—	—	—	—

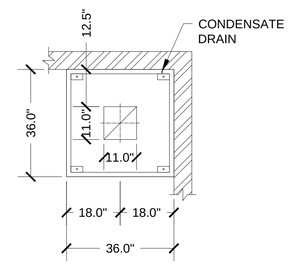

D5 HOOD PLAN #77
1/2"=1'-0"

HOOD NOTES:

A. CONTROLS FOR THE KITCHEN EXHAUST HOOD AND EXHAUST SYSTEMS SHALL BE PROVIDED AND INSTALLED BY THE GENERAL CONTRACTOR.

B. THE FIRE SUPPRESSION SYSTEMS SHALL BE SPECIFIED TO BE SUPPLIED WITH A GAS SHUT-OFF VALVE, AUTOMATIC TYPE, IN CASE OF A COOKING OR HOOD FIRE AND INSTALLED IN AN ACCESSIBLE LOCATION BY THE GENERAL CONTRACTOR.

C. ELECTRICAL CONTRACTOR TO INTER-CONNECT HOODS POINT OF CONNECTION.

F. ELECTRICAL CONTRACTOR TO INSTALL CONDUIT AND BOX FROM FIRE SYSTEM'S MANUAL PULL STATION TO SUPPRESSION SYSTEM.

G. GAS SHUT-OFF VALVE SUPPLIED WITH FIRE SYSTEM TO BE INSTALLED BY THE GENERAL CONTRACTOR'S PLUMBING CONTRACTOR. VERIFY SIZE OF THE GAS LINE AT THAT LOCATION AND VERIFY THE LOCATION OF EACH GAS SHUT-OFF VALVE.

H. ELECTRIC SHUNT TRIP BREAKERS ARE NOT SUPPLIED WITH THE FIRE SUPPRESSION SYSTEM. SEE ELECTRICAL PLANS FOR SHUNT TRIP BREAKERS AND WIRING TO EACH FIRE SYSTEM AND THEIR LOCATIONS.

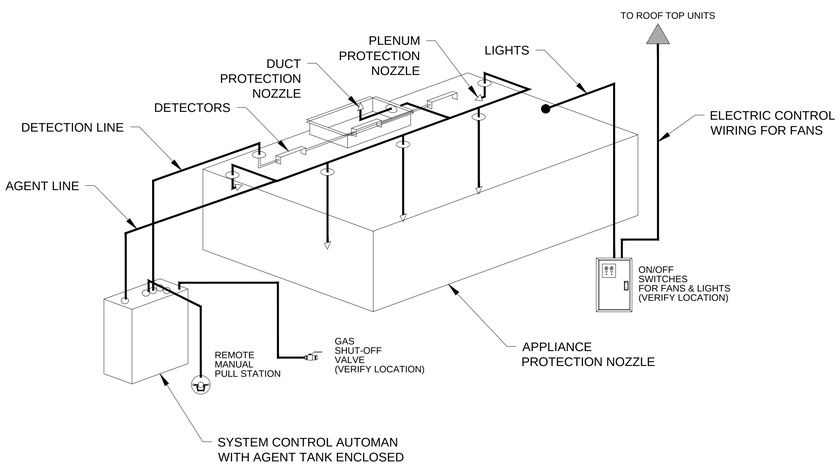

A2 ANSUL SYSTEM DETAIL
NTS EXAMPLE

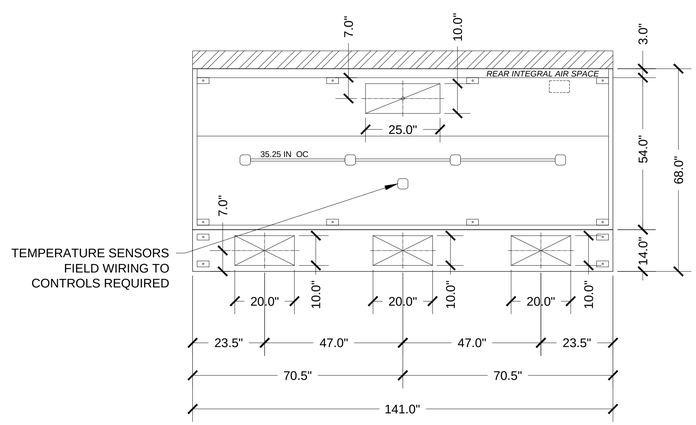

A5 HOOD PLAN #49
1/2"=1'-0"

RDA ◦ DESIGN GROUP
Specializing in Foodservice Facility Planning, Design & Development
RDADesignGroup.com 505-898-3344

© RDA DESIGN GROUP / RDA-LTD, ALL RIGHTS RESERVED
This drawing is an instrument of service and the property of RDA Design Group and shall remain their property. The use of this drawing and the contents of this drawing shall be restricted to the original site for which it was prepared and publication (including reproduction) thereof is expressly limited to such.

CONSTRUCTION DOCUMENTS

autotroph
architecture.planning.sustainable design consulting

No.	Description	Date

Hwy 14 Senior Center

HOOD PLAN

Project Number	1606
Date	10.20.17
Drawn By	LMB
Checked By	AD

K1.5

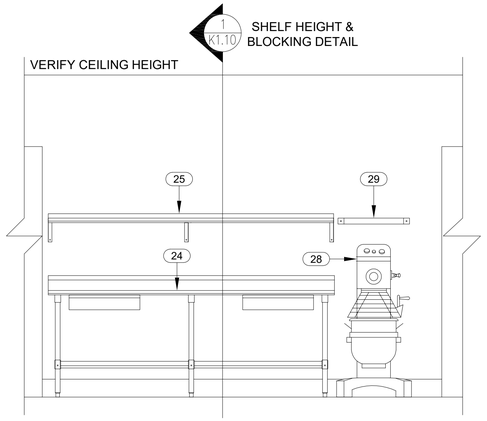

E3 ELEVATION
1/2"=1'-0"

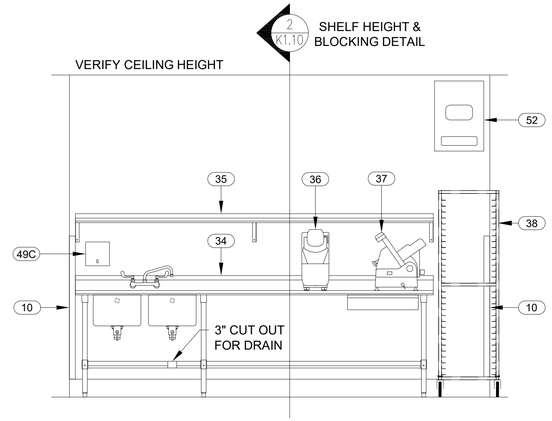

E5 ELEVATION
1/2"=1'-0"

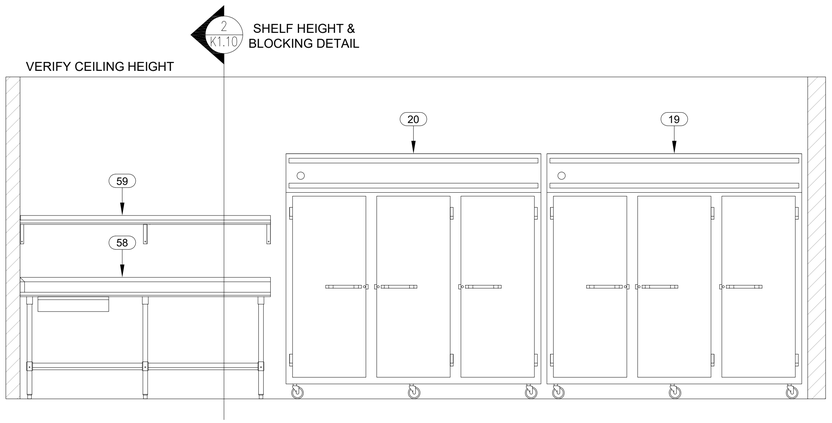

C2 ELEVATION
1/2"=1'-0"

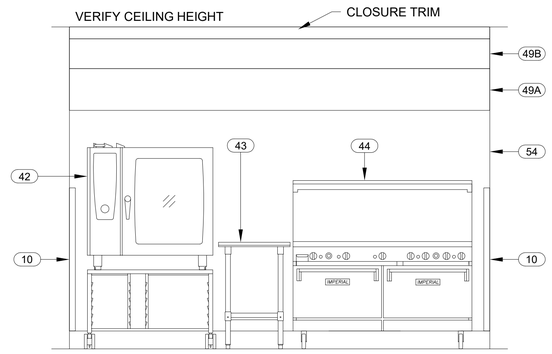

C5 ELEVATION
1/2"=1'-0"

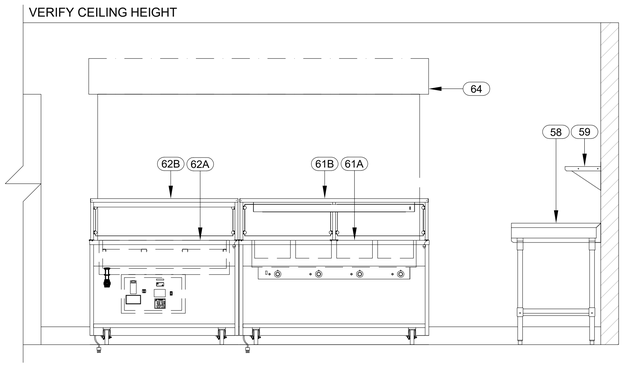

A5 ELEVATION
1/2"=1'-0"

RDA DESIGN GROUP
Specializing in Foodservice Facility Planning, Design & Development
RDADesignGroup.com 505-898-3344

© RDA DESIGN GROUP / RDA-LTD, ALL RIGHTS RESERVED
This drawing is an instrument of service and the property of RDA Design Group and shall remain their property. The use of this drawing and the contents of this drawing shall be restricted to the original site for which it was prepared and publication (including reproduction) thereof is expressly limited to such.

CONSTRUCTION DOCUMENTS

autotroph
architecture.planning.sustainable design consulting

No.	Description	Date

Hwy 14 Senior Center

ELEVATIONS

Project Number	1606
Date	10.20.17
Drawn By	LMB
Checked By	AD

K1.6

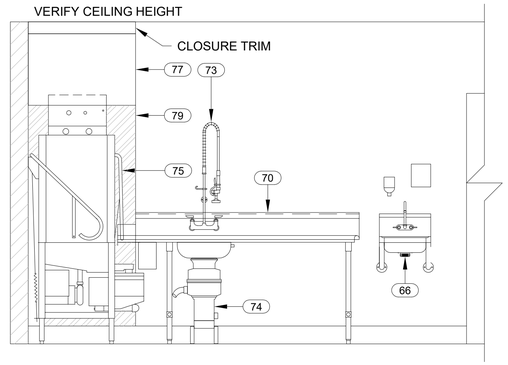

E3 ELEVATION
1/2"=1'-0"

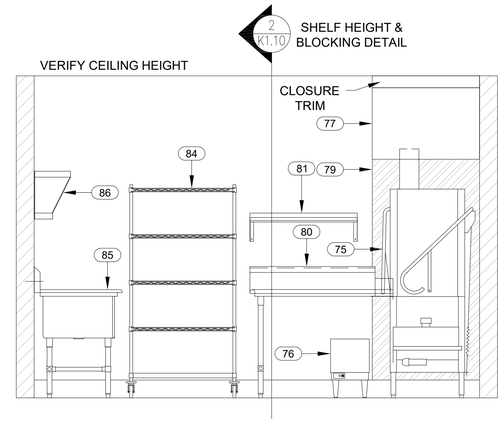

E5 ELEVATION
1/2"=1'-0"

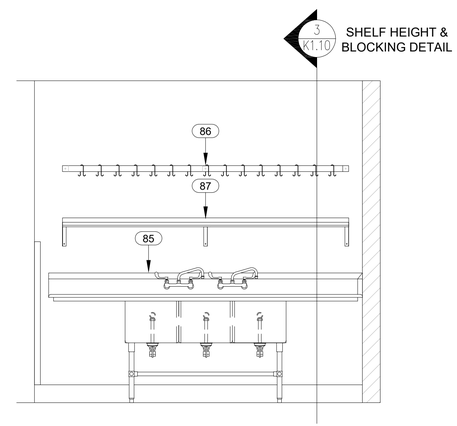

C5 ELEVATION
1/2"=1'-0"

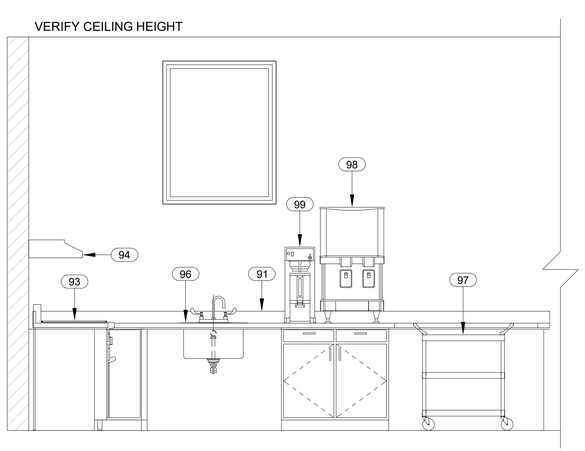

A2 ELEVATION
1/2"=1'-0"

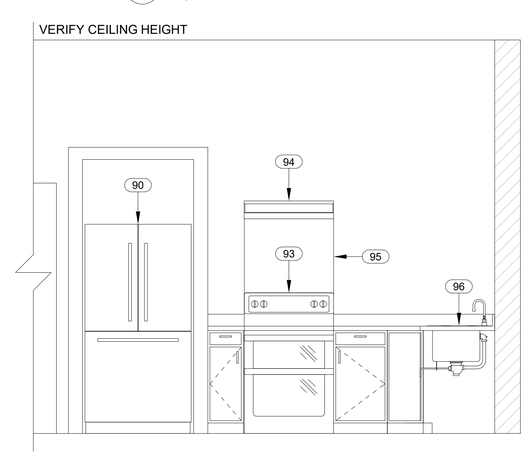

A5 ELEVATION
1/2"=1'-0"

RDA ◦ DESIGN GROUP
Specializing in Foodservice Facility Planning, Design & Development
RDADesignGroup.com 505-898-3344

© RDA DESIGN GROUP / RDA-LTD, ALL RIGHTS RESERVED
This drawing is an instrument of service and the property of RDA Design Group and shall remain their property. The use of this drawing and the contents of this drawing shall be restricted to the original site for which it was prepared and publication (including reproduction) thereof is expressly limited to such.

CONSTRUCTION DOCUMENTS

autotroph
architecture.planning.sustainable design consulting

No.	Description	Date

Hwy 14 Senior Center

ELEVATIONS

Project Number	1606
Date	10.20.17
Drawn By	LMB
Checked By	AD

K1.7

EQUIPMENT INFORMATION						GAS		PLUMBING					ELECTRICAL										
ITEM #	A/B	QTY	DESCRIPTION	SOURCE	REMARKS	GAS	MBTUH	HOT WATER	COLD WATER	DIRECT	IN-DIRECT	REMARKS	VOLTS	PHASE	HP	KW	AMPS	DIRECT	C&P	NEMA	AFF	REMARKS	ITEM #	A/B
1		1	AIR CURTAIN	BY KEC									120	1	1/3				X		96"	TWO MOTORS	1	
2		1	MOP SINK, BASIN TYPE	BY GC	SEE MECH			0.50	0.50	X													2	
3		1	WALL COVERING (not shown)	BY GC																			3	
4		1	UTILITY FAUCET (not shown)	BY G.C.	SEE ARCH			0.50	0.50														4	
5		1	MOP HANGER (not shown)	BY GC	SEE ARCH - WB																		5	
6		1	SOAP DISPENSER (not shown)	BY OWNER	VENDOR				0.50														6	
7		1	MOP BUCKET	BY OWNER																			7	
8			SPARE NUMBER																				8	
9		1	WIRE SHELVING, FREESTANDING	BY KEC																			9	
10		3	WALL CAP GUARD	BY KEC																			10	
11		1	HAND SINK, WALL MOUNT	BY KEC	WB			0.50	0.50	X													11	
12		1	SOAP & TOWEL DISPENSER (not shown)	BY OWNER																			12	
13			SPARE NUMBER																				13	
14			SPARE NUMBER																				14	
15		1	CAN RACK	BY KEC																			15	
16		7	WIRE SHELVING, FREESTANDING	BY KEC																			16	
17			SPARE NUMBER																				17	
18			SPARE NUMBER																				18	
19		1	FREEZER, REACH-IN, 3-SECTION	BY KEC	PLUG								120/208	1	3/4		12.1		X		84"	PROVIDE WITH CORD & PLUG	19	
20		1	REFRIGERATOR, REACH-IN, 3-SECTION	BY KEC									120	1	1/2		13.1		X	5-15P	84"		20	
21			SPARE NUMBER	BY KEC																			21	
22			SPARE NUMBER																				22	
23			SPARE NUMBER																				23	
24		1	TABLE, WORK	BY KEC																			24	
25		1	SHELF, WALL MOUNTED	BY KEC	WB																		25	
26		2	APPLIANCE, FUTURE	BY OWNER	FUTURE								120	1					X		48"		26	
27			SPARE NUMBER																				27	
28		1	MIXER, 40 QT	BY KEC									208	3	2		7.0		X	L15-20P	18"		28	
29		1	POT RACK, WALL MOUNTED	BY KEC	WB																		29	
30			SPARE NUMBER																				30	
31			SPARE NUMBER																				31	
32			SPARE NUMBER																				32	
33			SPARE NUMBER																				33	
34		1	TABLE WITH SINK	BY KEC				0.50	0.50		X												34	
35		1	SHELF, WALL MOUNTED	BY KEC	WB																		35	
36		1	FOOD CUTTER	BY KEC									120	1	2/3	0.50	7.1		X	5-15P	48"		36	
37		1	FOOD SLICER	BY KEC									120	1	1/2		3.0		X	5-15P	48"		37	
38		1	PAN RACK	BY KEC																			38	
39			SPARE NUMBER																				39	
40			SPARE NUMBER																				40	
41			SPARE NUMBER																				41	
42		1	COMBI-OVEN, GAS, MOBILE	BY KEC		0.75	170		0.75		X	2 WATER CONNECTIONS FROM FILTER	208	1			15.0		X	6-15P	48"		42	
43		1	TABLE, LANDING	BY KEC																			43	
44		1	RANGE, 4-BURNER, 36" GRIDDLE, GAS	BY KEC		0.75	258																44	
45		1	HEAT SEAL MACHINE	BY OWNER	EXISTING								120	1					X		42"		45	
46			SPARE NUMBER																				46	
47			SPARE NUMBER																				47	
48			SPARE NUMBER																				48	
49	A	1	EXHAUST HOOD, COOKING	BY KEC									120	1				X			108"	FOR LIGHTS	49	A
49	B	1	RETURN AIR PLENUEM	BY KEC																			49	B
49	C	1	HOOD SWITCHES & CONTROLS	BY KEC	SEE ELEC.																		49	C
50	A	1	EXHAUST FAN AND DUCT WORK (not shown)	BY GC	SEE MECH.								208	1				X			ON ROOF	VERIFY WITH MECH.	50	A
50	B	1	EXHAUST DUCT FIRE SHAFT (not shown)	BY GC	SEE MECH.																		50	B
50	C	LOT	ROOF PENETRATION & CURB (not shown)	BY GC	SEE ARCH.																		50	C
51		1	TEMPERED MAKE-UP AIR/SUPPLY FAN (not shown)	BY GC	SEE MECH.								208	1				X			ON ROOF	VERIFY WITH MECH.	51	
52		1	FIRE SUPPRESSION SYSTEM, WET CHEMICAL, REMOTE	BY KEC	WB																		52	
53	A	1	GAS SHUT-OFF VALVE, REMOTE (not shown)	BY KEC	INSTALLED BY GC																		53	A
53	B	1	MANUAL PULL STATION, REMOTE (not shown)	BY KEC	INSTALLED BY GC																		53	B

EQUIPMENT SCHEDULE NOTES:

A. THE GENERAL CONTRACTOR WILL PROVIDE AND INSTALL ALL REQUIRED BACKING IN WALLS FOR WALL MOUNTED EQUIPMENT AND BACKING ABOVE CEILING TO SUSPEND EQUIPMENT. KEC SHALL PROVIDE SHOP DRAWINGS SHOWING REQUIRED LOCATIONS AND WEIGHT OF EQUIPMENT.

B. GENERAL CONTRACTOR TO INTER-CONNECT COMPONENT HARDWARE. SEE FOODSERVICE EQUIPMENT SUBMITTALS FOR DETAILS ON COMPONENTS AND CONNECTION REQUIREMENTS.

C. VERIFY UTILITIES ON ALL VENDOR SUPPLIED EQUIPMENT.

REMARKS ABBREVIATIONS:

WB WALL BACKING, BLOCKING AND REINFORCEMENTS REQUIRED TO HOLD, SUPPORT OR SUSPEND EQUIPMENT WILL BE PROVIDED AND INSTALLED BY THE GENERAL CONTRACTOR.

CONSTRUCTION DOCUMENTS

autotroph
architecture.planning.sustainable design consulting

No.	Description	Date

Hwy 14 Senior Center

EQUIPMENT UTILITY SCHEDULE

RDA DESIGN GROUP
Specializing in Foodservice Facility Planning, Design & Development
RDADesignGroup.com 505-898-3344

© RDA DESIGN GROUP / RDA-LTD. ALL RIGHTS RESERVED
This drawing is an instrument of service and the property of RDA Design Group and shall remain their property. The use of this drawing and the contents of this drawing shall be restricted to the original site for which it was prepared and publication (including reproduction) thereof is expressly limited to such.

Project Number	1606
Date	10.20.17
Drawn By	LMB
Checked By	AD

K1.8

EQUIPMENT INFORMATION						GAS		PLUMBING					ELECTRICAL											
ITEM #	A/B	QTY	DESCRIPTION	SOURCE	REMARKS	GAS	MBTUH	HOT WATER	COLD WATER	DIRECT	IN-DIRECT	REMARKS	VOLTS	PHASE	HP	KW	AMPS	DIRECT	C&P	NEMA	AFF	REMARKS	ITEM #	A/B
54		1	S/S WALL COVERING & TRIM	BY KEC																			54	
55			SPARE NUMBER																				55	
56			SPARE NUMBER																				56	
57			SPARE NUMBER																				57	
58		1	TABLE, WORK	BY KEC																			58	
59			SHELF, WALL MOUNTED	BY KEC	WB																		59	
60			SPARE NUMBER																				60	
61	A	1	SERVING COUNTER, HOT, 4-WELL	BY KEC					0.50		X		208	1		3.40	7.8		X	5-15P	18"		61	A
61	B	1	SNEEZE GUARD WITH LIGHTS AND WARMER	BY KEC									120	1		1.10	9.2		X	5-15P	18"		61	B
62	A	1	SERVING COUNTER, COLD, 3-WELL	BY KEC							X		120	1	1/4		6.0		X	5-15P	18"		62	A
62	B	1	SNEEZE GUARD WITH LIGHTS	BY KEC									120	1			1.0		X	5-15P	18"		62	B
63		1	TRAY SLIDE, S/S	BY KEC																			63	
64		1	ROLLER DOOR	BY GC	SEE ARCH.																		64	
65			SPARE NUMBER																				65	
66		1	HAND SINK, WALL MOUNT	BY KEC	WB			0.50	0.50	X													66	
67		1	SOAP & TOWEL DISPENSER (not shown)	BY OWNER																			67	
68			SPARE NUMBER																				68	
69			SPARE NUMBER																				69	
70		1	SOILED DISH TABLE	BY KEC																			70	
71		1	TRASH CAN	BY OWNER																			71	
72			SPARE NUMBER																				72	
73		1	PRE-RINSE ASSEMBLY	BY KEC				0.50	0.50														73	
74		1	DISPOSER, 3 HP	BY KEC					0.50	X			208	3	3		9.0	X			18"		74	
75		1	DISH MACHINE, DOOR TYPE	BY KEC				0.75			X	CONNECTS TO BOOSTER HEATER	208	3	#		24.0	X			76"		75	
76		1	BOOSTER HEATER	BY KEC				0.75			X	CONNECTS TO DISH MACHINE	208	3			29.1	X			18"		76	
77		1	EXHAUST HOOD, CONDENSATE	BY KEC																			77	
78	A	1	EXHAUST FAN & DUCTWORK (not shown)	BY GC	SEE MECH.								120	1				X			ON ROOF	VERIFY WITH MECH.	78	A
78	B	1	ROOF PENATRATION AND CURB (not shown)	BY GC	SEE ARCH.																		78	B
78	C	1	CONTROLS FOR EXHAUST (not shown)	BY GC	SEE ELEC.																		78	C
79		LOT	S/S WALL COVERING & TRIM (not shown)	BY KEC																			79	
80		1	CLEAN DISHTABLE	BY KEC																			80	
81		1	SHELF, WALL MOUNTED	BY KEC	WB																		81	
82			SPARE NUMBER																				82	
83			SPARE NUMBER																				83	
84		1	WIRE SHELVING, FREESTANDING	BY KEC																			84	
85		1	THREE COMPARTMENT SINK	BY KEC				0.50	0.50		X	WITH 2 FAUCETS											85	
86		1	POT RACK, WALL MOUNTED	BY KEC	WB																		86	
87		1	SHELF, WALL MOUNTED	BY KEC	WB																		87	
88			SPARE NUMBER																				88	
89			SPARE NUMBER																				89	
			KITCHENETTE																					
90		1	REFRIGERATOR, RESIDENTIAL	BY KEC					0.50				120	1					X		48"	DEDICATED CIRCUIT BREAKER	90	
91		LOT	COUNTER TOP WITH CABINET BASE	BY GC	SEE ARCH.																		91	
92			SPARE NUMBER																				92	
93		1	RANGE, ELEC., RESIDENTIAL	BY KEC									240				40.0		X		18"	PROVIDE WITH CORD & PLUG	93	
94		1	EXHAUST HOOD	BY KEC									120			75 w	2.5	X			72"		94	
95		1	BACKSPLASH, S/S	BY KEC																			95	
96		1	SINK, DROP-IN	BY KEC				0.50	0.50		X												96	
97		1	BUS CART	BY OWNER																			97	
98		1	ICE AND WATER DISPENSER	BY KEC					0.50		X	FROM FILTER	120	1			9.0	X			60"	15 AMP CIRCUIT BREAKER	98	
99		1	COFFEE BREWER, THERMAL, SINGLE	BY OWNER	FUTURE				0.50				120	1		1.80	15.0		X	5-15P	48"		99	
100			SPARE NUMBER																				100	

EQUIPMENT SCHEDULE NOTES:

A. THE GENERAL CONTRACTOR WILL PROVIDE AND INSTALL ALL REQUIRED BACKING IN WALLS FOR WALL MOUNTED EQUIPMENT AND BACKING ABOVE CEILING TO SUSPEND EQUIPMENT. KEC SHALL PROVIDE SHOP DRAWINGS SHOWING REQUIRED LOCATIONS AND WEIGHT OF EQUIPMENT.

B. GENERAL CONTRACTOR TO INTER-CONNECT COMPONENT HARDWARE. SEE FOODSERVICE EQUIPMENT SUBMITTALS FOR DETAILS ON COMPONENTS AND CONNECTION REQUIREMENTS.

C. VERIFY UTILITIES ON ALL VENDOR SUPPLIED EQUIPMENT.

REMARKS ABBREVIATIONS:

WB WALL BACKING, BLOCKING AND REINFORCEMENTS REQUIRED TO HOLD, SUPPORT OR SUSPEND EQUIPMENT WILL BE PROVIDED AND INSTALLED BY THE GENERAL CONTRACTOR.

CONSTRUCTION DOCUMENTS

autotroph
architecture.planning.sustainable design consulting

No.	Description	Date

Hwy 14 Senior Center

EQUIPMENT UTILITY SCHEDULE

RDA ◦ DESIGN GROUP
Specializing in Foodservice Facility Planning, Design & Development
RDADesignGroup.com 505-898-3344

© RDA DESIGN GROUP / RDA-LTD. ALL RIGHTS RESERVED
This drawing is an instrument of service and the property of RDA Design Group and shall remain their property. The use of this drawing and the contents of this drawing shall be restricted to the original site for which it was prepared and publication (including reproduction) thereof is expressly limited to such.

Project Number	1606
Date	10.20.17
Drawn By	LMB
Checked By	AD

K1.9

VERIFY CEILING HEIGHT

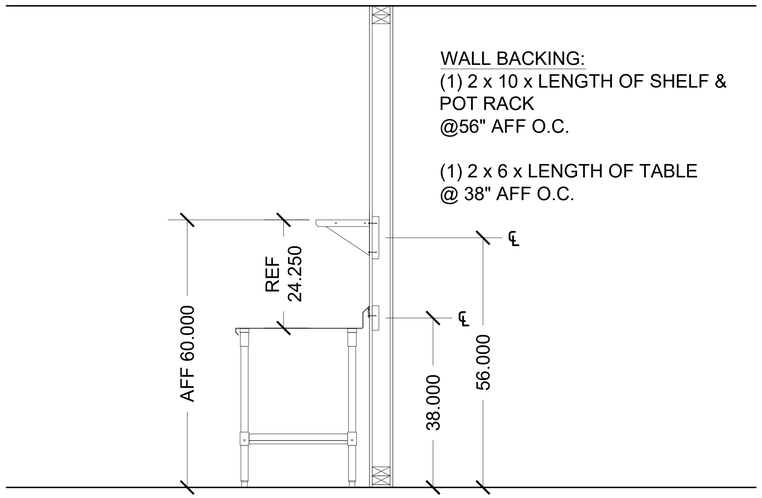

WALL BACKING:
(1) 2 x 10 x LENGTH OF SHELF & POT RACK
@56" AFF O.C.

(1) 2 x 6 x LENGTH OF TABLE
@ 38" AFF O.C.

1 SHELF HEIGHT/WALL BACKING DETAIL
3/4"=1'-0"

VERIFY CEILING HEIGHT

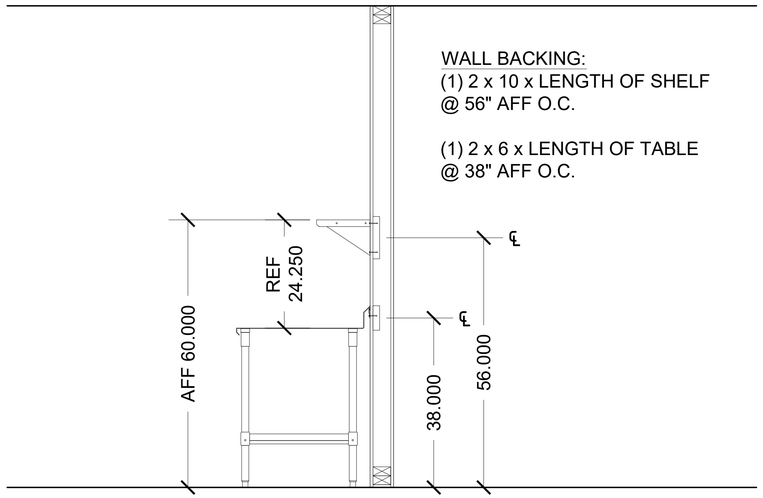

WALL BACKING:
(1) 2 x 10 x LENGTH OF SHELF
@ 56" AFF O.C.

(1) 2 x 6 x LENGTH OF TABLE
@ 38" AFF O.C.

2 SHELF HEIGHT/WALL BACKING DETAIL
3/4"=1'-0"

VERIFY CEILING HEIGHT

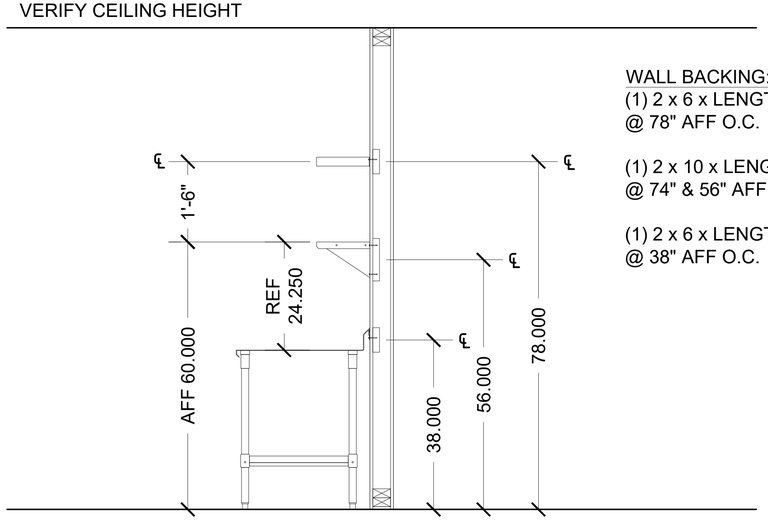

WALL BACKING:
(1) 2 x 6 x LENGTH OF POT RACK
@ 78" AFF O.C.

(1) 2 x 10 x LENGTH OF SHELF
@ 74" & 56" AFF O.C.

(1) 2 x 6 x LENGTH OF TABLE
@ 38" AFF O.C.

3 SHELF HEIGHT/WALL BACKING DETAIL
3/4"=1'-0"

CONSTRUCTION DOCUMENTS

autotroph
architecture.planning.sustainable design consulting

No.	Description	Date

Hwy 14 Senior Center

SPECIAL INSTALL

RDA DESIGN GROUP
Specializing in Foodservice Facility Planning, Design & Development
RDADesignGroup.com 505-898-3344

© RDA DESIGN GROUP / RDA-LTD, ALL RIGHTS RESERVED
This drawing is an instrument of service and the property of RDA Design Group and shall remain their property. The use of this drawing and the contents of this drawing shall be restricted to the original site for which it was prepared and publication (including reproduction) thereof is expressly limited to such.

Project Number	1606
Date	10.20.17
Drawn By	LMB
Checked By	AD

K1.10