SANTA FE COUNTY
PUBLIC WORKS DEPARTMENT

INVITATION FOR BID

IFB# 2019-0108-PW/KE

CONSTRUCTION OF THE PROPERTY CONTROL FACILITY LOCATED WITHIN THE PUBLIC WORKS CAMPUS

NOVEMBER 2018

SANTA FE COUNTY
Table of Contents

BIDDING DOCUMENTS

Advertisement for Bid 3
Instructions for Bidders 4
Bid Proposal Form 16
Bid Form 18
Bid Sheets 20
Non Collusion Affidavit of Prime Bidder 21
Non Collusion Affidavit of Subcontractor 22
Certification of Non-Segregated Facilities 24
Certification of Bidder Regarding Equal Employment Opportunity 25
Certification of Subcontractor Regarding Equal Employment Opportunity 26
Bid Bond 27
Performance Bond 28
Labor and Material Payment Bond 30
Subcontractor Listing 32

APPENDICES

A. Acknowledgement of Receipt of Invitation to Bid Form 35
B. Campaign Contribution Disclosure Form 36
C. Resident Veterans Preference Certification 39
D. Sample Construction Service Contract 40
E. N.M. Wage Determination 96
F. Project Specifications and Drawings 100

ADVERTISEMENT

SANTA FE COUNTY
INVITATION FOR BID
IFB# 2019-0108-PW/KE
CONSTRUCTION OF THE PROPERTY
CONTROL FACILITY
N.M. State Commodity Codes
91427 through 91488

The Santa Fe County Public Works Department is requesting bids for the purpose of procuring a licensed Contactor to provide construction of a new Property Control Facility located within the Public Works Campus, located at 424 NM 599, Santa Fe, NM. Bids may be held for ninety (90) days subject to all action by the County. Santa Fe County reserves the right to reject any and all bids in part or in whole. A completed bid package must be submitted in a sealed container indicating the bid title and number along with the bidding firm's name and address clearly marked on the outside of the container.

All bids must be received by 2:00 PM on Tuesday, December 18, 2018 at the Santa Fe County Purchasing Division, 142 W. Palace Avenue (Second Floor), Santa Fe, NM 87501. By submitting a bid for the requested materials and/or services each firm is certifying that their bid is in compliance with regulations and requirements stated within the IFB package.

A Mandatory Pre-Bid Conference will be held on November 29 at 10:00 AM at the Public Works Projects Conference Room, located at 901 W. Alameda, Suite 20C, Santa Fe, NM. This Visit is MANDATORY and will include a MANDATORY SITE VISIT.

EQUAL OPPORTUNITY EMPLOYMENT: All qualified bidders will receive consideration of contract(s) without regard to race, color, religion, sex, national origin, ancestry, age, physical and mental handicap, serious mental condition, disability, spousal affiliation, sexual orientation or gender identity.

An Invitation for Bid packages is available by contacting Karen K. Emery, Santa Fe County, by telephone at (505) 992-6759, by email at kkemery@santafecountynm.gov or by accessing the Santa Fe County website at http://www.santafecountynm.gov/asd/current_bid_solicitations

BIDS RECEIVED AFTER THE DATE AND TIME SPECIFIED ABOVE WILL NOT BE ACCEPTED.

Santa Fe County
Publish: November 18 and 19, 2018

INSTRUCTIONS FOR BIDDERS

1. LOCATION AND DESCRIPTION OF WORK:

The new Property Control Facility is located within the existing Santa Fe County Public Works Campus at 424 NM 599, Santa Fe, NM 87507. The project consists of the construction of a freestanding metal building with a 5,467 gross square foot footprint, with offices, a plan room, a break/meeting room, ADA compliant restrooms/locker rooms, a high-bay vehicle workshop with associated tool rooms and a 465 net square foot storage mezzanine. The Base Bid includes associated site work; Alternate 1 includes the addition of a roof structure for a 4,900 square foot Vehicle Storage Shelter.

2. SCOPE OF WORK

Base Bid:

Provide Construction Services for the following items, which will be bid in a single contract for construction, all in accordance with the Architects' Project Manual and Construction Documents:

The Work includes the following, but is not limited to:

A. Site grading for building slab/foundation, parking areas, and site drainage.
B. Concrete foundations and site paving (concrete and asphaltic) and curbing.
C. Metal Building System structure, with metal decking, structural stud framing, thermal insulation, metal wall panels, aluminum storefront, and TPO roofing.
D. Interior framing with gypsum board, hollow metal doors and frames, glazing, hardware, overhead coiling door, acoustical ceiling tile, VCT, vinyl accessories, painting, signage, metal lockers, fire extinguishers, toilet compartments and bathroom fixtures.
E. Fire alarm, plumbing, HVAC equipment with ductwork, electrical and communications work.
F. Utility connections to existing on-site electrical, communications, water, and sewer systems.
G. Concrete foundations with anchor bolts for Vehicle Storage Shelter.
H. Uncovered parking areas and drive lanes striped and marked.

Additive Alternate 1:
Provide construction services for a 4,900 square foot roof structure on the concrete foundations included in the Base Bid to cover the Vehicle Storage Shelter as indicated by the drawings and specifications.

The Contractor shall supply all labor, materials and equipment necessary to complete the work in accordance with the construction plans and specifications.

The bid shall be in the form of a lump sum as requested on the bid sheets.

The bid shall include all permits, fees, tie-in fees for all utilities, overhead and profit and incidental costs in the bid amounts. All applicable taxes **shall not** be included in the bid amounts.

All applicable laws and ordinances and the rules and regulations of all authorities having jurisdiction over the project shall apply to the contractor and all agreements between the contractor and the County.

3. TIME AND PLACE OF RECEIVING AND OPENING BIDS:

   This information will be found in the "Advertisement for Bids" form attached hereto. A bid received after the specified time will not be considered and will be returned to the bidder unopened.

4. SPECIFICATIONS:

   The construction/addition/renovation of the project will be in accordance with the specification and drawings provided by the County, which are included in this bid package.

5. CONTRACT TIME:

   The number of days for the completion of work (the contract time) is 300 days. The number of days for the completion of work is weather working calendar days, where "calendar days" are defined as consecutive days.

6. COPIES OF BIDDING DOCUMENTS:

   The Invitation for Bid Documents will be available by contacting Karen K. Emery, Santa Fe County Purchasing, by telephone at (505) 992-6759, email at kkemery@santafecountynm.gov and on the Santa Fe County website at www.santafecountynm.gov/services/asd/current_bid_solicitations.

   Bidders shall use complete sets of Bidding Documents in preparing bids; neither the owner nor engineer assumes responsibility for errors or misinterpretations resulting from the use of incomplete sets of Bidding Documents.

   No license or grant of use of the Bidding Documents is conferred by issuance of copies of the bidding documents.

7. BIDDER'S REPRESENTATION:

   By submitting a bid the bidder represents that: a) the bidder has read and understands the Bid Documents and Contract Documents; b) the bid is made in compliance with the Bid Documents and Contract Documents; c) The bidder has visited the site and has become familiar with local conditions under which the Work is to be performed, and has correlated the bidder's personal observations with the requirements of the proposed Contract Documents; d) the bidder has familiarized itself with federal, state and local laws, ordinances, rules, and

regulations affecting performance of the Work; and e) the bid is based upon the materials, equipment and systems required by the Bid Documents without exception; and f) the County shall rely on these representations.

8. THE COMPLETE CONTRACT DOCUMENTS CONTAIN THE FOLLOWING:

Everything that is bound herein, project plans and any specifications referenced herein.

9. INTERPRETATIONS/ADDENDA:

All questions about the meaning or intent of the contract documents shall be submitted to the Procurement Manager in writing. Replies will be issued by written addenda posted to the County Web site and E-Mailed to all parties who attended the Mandatory Pre-bid meeting and turn in Appendix **A** **"**The Acknowledgement of Receipt Form. Questions received less than seven (7) calendar days prior to the date for opening of bids will not be answered. Only questions answered by formal written addenda will be binding. Oral and other interpretations or clarifications will be without legal effect. Written questions or inquiries in relation to the Invitation for Bid will be directed to:

Karen K. Emery, Procurement Specialist Senior
Santa Fe County Purchasing Division
142 W. Palace Avenue (Second Floor)
Santa Fe, NM 87501
Ph. (505) 992-6759
Fax (505) 989-3243
Email – kkemery@santafecountynm.gov

Addenda will be transmitted to all bidders that are listed on the Pre-Bid Sign in Sheet and turn in an Acknowledgement of Receipt Form.

Copies of addenda will be made available for inspection wherever Bid Documents are on file for that purpose. Each addendum shall be part of the contract documents as specified in the written contract, attached to these specifications (see Appendix D).

Addenda will be issued no later than five (5) working days prior to the date for receipt of bids except an addendum withdrawing the request for bids or one which includes postponement of the date for receipt of bids.

Each bidder shall ascertain prior to submitting a bid that the bidder has received all addenda and the bidder shall acknowledge receipt in the bid.

10. RESIDENT PREFERENCE:

If a bidder wishes to be given preference in this procurement, it is required to submit its certificate or certificate number issued by the State of New Mexico Purchasing Agent with the bid prior to the bid submittal time and date deadline. Preference will not be given to a bidder who does not submit its certificate or certificate number that can be verified with the State

Purchasing Office. The certificate must be under the bidder's business name as represented in its bid. The bidder's certificate must indicate whether the bidder is certified as a resident business, resident manufacturer, or New York State business enterprise. Application of preference by the County shall be provided as described at Section 13-1-21 (A)-(L) and Section 13-1-21.2 NMSA 1978, of the State Procurement Code.

11. SUBCONTRACTORS, SUPPLIERS AND OTHERS:

The contractor shall be required to fully comply with the Subcontractors Fair Practices Act, NMSA 1978, 13-4-31 to 13-4-42.

A. The contractor, in the bid documents, must identify in writing to the County those portions of the work that it proposes to subcontract and after the Notice of Award, may only subcontract other portions of the work with the County's written consent.

B. Any subcontractor who will be providing more than $5,000 or one-half of one percent of the architect's or engineer's estimate of the total project cost (not including alternates) whichever is greater for any service, must be listed on the Subcontractor Listing.

12. SUBSTITUTIONS:

The materials, products, and equipment described in the Bid Documents establish a standard of required function, dimension, appearance and quality to be met by any proposed substitution. No substitution will be considered prior to receipt of bids.

13. WAGE RATES/REGISTRATION WITH THE LABOR AND INDUSTRIAL DIVISION OF THE LABOR DEPARTMENT:

The contractor shall be required to fully comply with the Public Works Minimum Wage Act, NMSA 1978, 13-4-11 thru 13-4-17. If the minimum wage rate determination for the project is not included in the initial Bid Documents, it will be furnished in an addendum.

A contractor or subcontractors who submit a bid valued at more than sixty thousand dollars ($60,000) for a public works project that is subject to the Public Works Minimum Wage Act must be registered with the New Mexico Workforce Solutions at the time of the bid opening. The registration number shall be provided in the bid submitted by the contractor in the space provided for subcontracts with work proposed. After the bid opening, the registration numbers will be verified by the County and the bid will be determined to be non-responsive and disqualified if the registration numbers are ***"inactive"*** and the contractor does not provide proof of the required registration for itself or its subcontractors for work proposed over sixty thousand dollars ($60,000).

14. BID FORM:

A. The bid forms are included in the bidding documents; additional copies may be obtained from the Santa Fe County Purchasing Division.

B. Bid forms must be completed in either ink or typewritten. The bid price of each item on the form must be stated in numerals and written words; in case of an error in extensions in the unit price schedule the unit price shown in written words shall govern.

C. Bids by corporations must be executed in the corporate name by the president or a vice president (or other corporate office accompanied by evidence of authority to sign) and the corporate seal shall be affixed and attested by the secretary or an assistant secretary. The corporate address and state of incorporation shall be shown below the signature.

D. Bids by partnerships must be executed in the partnership name and signed by a partner, their title must appear under their signature and the official address of the partnership must be shown below the signature.

E. All names must be typed or printed below the signature.

F. The bid shall contain an acknowledgment of receipt of all addenda (the numbers of which shall be filled in on the bid form).

15. BID SECURITY:

Each individual bid shall be accompanied by bid security equal to 5% of the amount of the bid. Such bid security shall be in the form of a certified or cashier's check made payable to the County or a surety bond issued by a surety authorized to conduct business in the State of New Mexico and who is approved in federal circular 570 as published by the U.S. Treasury Department.

By submitting the bid and providing the bid security, the bidder pledges to enter into a binding contract with the County and will furnish bonds covering the faithful performance of the contract and payment of all obligations arising hereunder. Should a bidder refuse to enter into such contract or fail to furnish such bonds, if required, the amount of the bid security shall be forfeited to the County as liquidated damages, not as penalty.

The County will have the right to retain the bid security of bidders to whom an award is being considered until either the contract has been executed and bonds, if required, have been furnished or the specified time has elapsed so that bids may be withdrawn or all bids have been rejected.

16. POWER OF ATTORNEY:

Attorneys in fact who sign bonds must attach certified effective copies of their Power of Attorney to all bonds.

17. QUALIFICATION OF BIDS:

All contractors and subcontractors must have a valid New Mexico license appropriate to the work herein specified at the time the bid is submitted.

18. SUBMISSION OF BIDS:

Bids shall be submitted at the time and place indicated in the Advertisement for Bids and shall be enclosed in an opaque sealed envelope, marked with the project title, name and address of the bidder, N.M. License Number, and accompanied by the list of subcontractors and other required documents. All blanks must be filled in.
Conditional bids will not be considered. The envelope shall be addressed to:

Karen K. Emery, Procurement Specialist, Senior
Santa Fe County Purchasing Division
142 W. Palace Avenue (Second Floor)
Santa Fe, NM 87501

19. MODIFICATION AND WITHDRAWAL OF BIDS:

A bid may not be modified, withdrawn or canceled by the bidder following the time and date designated for the receipt of bids, and each bidder so agrees to these conditions by submitting a bid.

Prior to the time and date designated for receipt of bids, a bid submitted may be modified or withdrawn by notice to the County at the address designated for receipt of bids. Such notice shall be in writing and signed by the bidder.

Upon receipt such written confirmation shall be date and time stamped by the County on or before the date and time set for receipt of bids. A modification of a bid shall be worded as not to reveal the amount of the original bid.

.

20. GROSS RECEIPTS TAXES:

The amount of the bid shall **exclude** applicable New Mexico Gross Receipts Taxes or applicable local option taxes. The applicable gross receipts tax or applicable local option taxes shall be computed and shown as a separate amount on each request for payment made under the contract.

21. CONSIDERATION OF BIDS:

Bids received on time will be opened publicly and will be read aloud, and an abstract of the amounts of the base bids and alternates or bid items, if any, will be made available to the bidders. Each bid shall be open to public inspection.

22. BID OPENING PROCEDURE:

The person or persons opening the bids shall verify that the requirements of the Instruction to Bidders have been fulfilled, and shall read aloud the name of each apparently responsive bidder and the bid amount(s). If any requirements have not been met, the bid shall be deemed non-responsive and disqualified. Each bid shall be reviewed for the following:

A. Bid Proposal – Include name of bidder, type of organization, contractor's license number and DOL registration number and all required signatures.

B. Bid Form- Include acknowledgement of all addenda, if applicable, bidder's name, title, address, telephone number, **contractor's license number and type**, United States Treasury number, resident preference number, if applicable, and all required signatures.

C. Bid Sheet-Include best price offered, **excluding GRT**.

D. Non-Collusion Affidavit for Prime Bidder Form-Include all required notarized signatures.

E. Certification of Non-Segregated Facilities Form-Include all required notarized signatures.

F. Certification of Bidder Regarding Equal Employment Opportunity Form-Include all required signatures.

G. Bid Bond-Include all required notarized signatures.

H. Bid Security- Shall be in the form of a certified or cashier's check made payable to the County or a surety bond issued by a surety.

I. Subcontractor's Listing Form-List of all subcontractors performing work over $5,000.00, include name, address, telephone number, license number and **active** NM Department of Workforce Solutions Registration Number.

J. Campaign Contribution Disclosure Form-Include all required signatures.

K. Certificate of Resident Preference, if applicable.

IF ANY OF THESE REQUIREMENTS HAVE NOT BEEN MET, THE BID MAY BE DISQUALIFIED AND CONSIDERED NON-RESPONSIVE.

23. BIDS TO REMAIN OPEN:

All bids shall remain open for ninety (90) days after the day of the bid opening.

24. AWARD OF CONTRACT:

A. The County reserves the right to reject any and all bids and waive any and all informalities or technicalities and the right to disregard all nonconforming or conditional bids or counter proposals.

B. If a contract is to be awarded, it will be awarded to the lowest responsible bidder submitting a bid that is either: (i) the lowest base bid; or (ii) the lowest bid including the base bid and the alternate(s); or (iii) the lowest bid including the base bid and any combination of the alternates.

C. If the lowest responsible bidder has otherwise qualified, the lowest bidder may negotiate with the County for a lower bid if the lowest bid is within **ten percent** over budgeted project funds in order to prevent all bids from being rejected. No change in the original scope and/or terms and conditions will be allowed. Negotiations may be permitted with product, materials, and equipment alternatives as determined to be in the best interest of the County.

D. Alternates may be accepted and awarded in any manner or order based on available budget. The County reserves the right not to award any particular alternate.

25. LIQUIDATED DAMAGES:

Liquidated damages in the amount of five hundred fifty dollars ($500.00) per each working day that expires after the date of substantial completion until substantial completion is achieved and a certificate of Substantial Completion is issued by the County.

26. PREFERENCES:

In the construction of this project, the County has no preference for any process, type of equipment, or kind of material, but will consider all processes, types of equipment or kinds of material offered on a usual competitive basis if they are in fact equal to that specified and will accomplish the purpose intended. The County reserves the right to be the sole judge as to whether or not a different process, type of equipment or kind of material offered is in fact equal to that specified.

27. LICENSE OR ROYALTY FEES:

Licenses and/or royalty fees for products or for processes must be paid for directly by the contractor.

28. PERMITS:

It is the responsibility of the contractor and each subcontractor to obtain permits and inspections required by the County and/or the State of New Mexico or any other entity that may have jurisdiction over the construction or scope of work.

29. COLLUSION:

No bidder shall be interested in more than one bid. Collusion among bidders or the submission of more than one bid under different names by any firms or individual shall be cause for rejection of all bids in question without consideration.

30. QUANTITIES:

The quantities set forth in the bid proposal are estimated quantities on which bids will be compared and which will be the basis for award of contract. Payment will be made for the work actually performed.

31. PROTEST PROCEDURE:

Any bidder who is aggrieved in connection with procurement may protest to the County Purchasing Manager as set forth in Resolution No. 2006-60 by the Board of County Commissioners. A copy of Resolution No. 2006-60 is available upon request. The protest must be in writing and be submitted within fifteen (15) days after the facts or occurrences. The complete procedures and requirements regarding protests and resolution of protests are available from the Santa Fe County Purchasing Division upon request.

32. CONTRACTOR'S QUALIFICATION STATEMENT:

Bidders to whom award of a contract is under consideration shall submit, upon request, information and data to prove that their financial resources, production or service facilities, personnel, and service reputation and experience are adequate to make satisfactory delivery of the services, construction, or items of personal property described in the Bidding Documents.

33. BOND REQUIREMENTS – PERFORMANCE BOND AND PAYMENT BOND:

If awarded the contract, a bidder shall furnish bonds covering the faithful performance of the contract and payment of all obligations arising thereunder. The amount of the bonds, performance and payment, shall be equal to 100% of the contract sum. Bonds shall be issued by a surety authorized to conduct business in the State of New Mexico and who is approved in federal circular 570 as published by the U.S. Treasury Department. The cost of the bonds shall be included in the bid.

34. TIME OF DELIVERY AND FORM OF BONDS.

The bidder shall deliver the required bonds to the County no later than seven (7) days following the date of execution of the contract. If the Work is to be commenced prior

thereto in response to a letter of intent, the bidder shall, prior to commencement of the Work, submit evidence satisfactory to the County that such bonds will be furnished and delivered in accordance with this section.

The bidder shall require the attorney-in-fact who executes the required bonds on behalf of the surety to affix thereto a certified and current copy of the power of attorney.

35. WARRANTY:

The contractor shall furnish a written warranty of workmanship to the Procurement Manager for a period of one (1) year following the completion date in addition to all other warranties required by the Contract Documents.

36. NOTICE OF AWARD:

A written Notice of Award shall be issued by the County after review and approval of the bid and related documents.

37. IDENTICAL BIDS:

If two or more identical low bids are received, the County will apply the process described at Section 13.1.110 NMSA 1978, of the State Procurement Code.

38. CANCELLATION OF AWARD:

When in the best interest of the public, the County may cancel the award of any contract at any time before the execution of said contract by all parties without any liability against the County.

39. NOTICE TO PROCEED:

The County will issue a written Notice to Proceed and a purchase order to the contractor stipulating the date from which contract time will be charged and the date contract time is to expire, subject to valid modifications in accordance with the Contract Documents.

40. FAILURE TO EXECUTE CONTRACT:

Failure to return the signed contract with acceptable contract bonds and certificate of insurance within ten (10) calendar days after the date of the Notice of Award shall be just cause for the cancellation of the award. The award may then be made to the next lowest responsible bidder, or the work may be re-advertised and constructed under contract or otherwise, as the owner may decide.

41. INSURANCE REQUIREMENTS:

At a minimum upon execution of the Agreement between the County and the Contractor, the Contractor shall furnish to the County, Certificates of Insurance naming Santa Fe

County as an additional insured for the insurance coverage specified in the sample contract that is attached as an exhibit to this IFB.

42. CLARIFICATION OF NON-COLLUSION AFFIDAVIT OF SUBCONTRACTOR, AND CERTIFICATION OF SUBCONTRACTOR REGARDING EQUAL EMPLOYMENT OPPORTUNITY:

The general contractor is not required to present completed "Non-Collusion Affidavit of Subcontractor" and "Certification of Subcontractor Regarding Equal Employment Opportunity" forms from their subcontractors at the time of bid submittal; however, once the contract is awarded, the general contractor is responsible for providing these forms along with the bonds and certificate of insurance.

43. SUBCONTRACTOR PERFORMANCE AND PAYMENT BOND.

A subcontractor whose work to be performed on a public works building project is one hundred twenty five thousand dollars ($125,000) or more shall submit a performance and payment bond in the amount of the work they are to perform on the project. These bonds will be submitted within the stated (10) calendar days after the date of the Notice to Award.

44. OPERATIONS AND MAINTENANCE MANUALS:

At the completion of the project but prior to the Substantial Completion certificate will be approved by the architect, the contractor shall submit to the architect two (2) copies of a three ring binder with all maintenance and operations instructions for all systems and items within this phase of construction if applicable.

45. NOTICE:

The Procurement Code, Sections 13-1-28 through 13-1-199 NMSA 1978, imposes civil and misdemeanor criminal penalties for its violation. In addition, the New Mexico criminal statutes impose felony penalties for bribes, gratuities, and kick-backs.

46. SUFFICIENT APPROPRIATION:

Any contract awarded as a result of this IFB process may be terminated if sufficient appropriations or authorizations do not exist. Such termination will be effected by sending written notice to the contractor. The County's decision as to whether sufficient appropriations and authorizations are available will be accepted by the contractor as final.

47. NUMBER OF BIDS ACCEPTED:

Bidders shall submit only one (1) bid in response to this IFB.

48. LIVING WAGE:

Contractor shall comply with the requirements of the Santa Fe County Ordinance 2014-1 (Establishing a Living Wage) as amended by 2014-5.

49. DOUBLE-SIDED DOCUMENTS.

All submitted bids/proposal documents shall be double-sided, pursuant to Santa Fe County Resolution 2013-7, Adopting Sustainable Resource Management Principles, Section 2. A. Waste Reduction and Reuse…"all documents are to be double-sided, including those that are generated by outside entities using County funds and by consultants and contractors doing business with the County".

BID PROPOSAL FORM
IFB# 2019-0108-PW/KE
Construction of the Property Control Facility
424 NM 599, Santa Fe, NM

To Santa Fe County, State of New Mexico, Owner:

In compliance with the Information for Bidders and in strict conformance with the Contract Documents, _____, hereinafter called the Bidder, organized and existing under the laws of the State of New Mexico as a _____ (type of business or legal entity), hereby proposes to perform all the WORK required for the Construction of the Property Control Facility located at 424 NM 599 in Santa Fe County, New Mexico.

The undersigned declares that the only person or parties interested in the proposal as principals are those named herein; that the proposal is made without collusion with any person, firm or corporation; that it has carefully examined the specifications, including special provisions, if any, and that it has made a personal examination of the site of the work, that it is to furnish all the necessary machinery, tools, apparatus and other means of construction and do all the work and furnish all the materials specified in the manner and the time prescribed; that it understands that the quantities are approximate only and subject to increase or decrease, and that it is willing to perform any increased or decreased quantities of work at unit price bid.

The undersigned hereby agrees to execute and deliver the Construction Agreement within ten (10) days, or such further time as may be allowed in writing by Santa Fe County after receiving notification of the acceptance of this proposal, and it is hereby mutually understood and agreed that in case we do not, Santa Fe County may proceed to award the contract to others.

We hereby agree to commence the work within fifteen (15) days, or such further time as may be allowed in writing by Santa Fe County after notification to proceed.

The undersigned proposes to guarantee all work performed under these plans, specifications and contract for one year after acceptance by the County and repair and maintain same until the date of acceptance by Santa Fe County.

_____
Signature-Title

(Corporate Seal) _____
Corporate Name

_____
Address

_____
City, State, Zip Code

Names of individual members of firms or names and titles of all officers of Corporation.

_____

_____

_____

_____

_____

Corporation organized under the Laws of the State of

_____

_____
New Mexico Contractor's License No.

NM Department of Workforce Solutions, Public Works Labor Enforcement Fund Registration Number:

_____

SANTA FE COUNTY
BID FORM

FROM: _____

_____
hereinafter called "Bidder".

TO: Santa Fe County
142 West Palace Avenue
Santa Fe, New Mexico 87501

hereinafter called "CONTRACTING AGENCY",

BID FOR: IFB# **2019-0108-PW/KE**
PROJECT: Construction of the Property Control Facility

Purchasing Division:

The bidder has familiarized itself with the existing conditions on the project area affecting the cost of the work and with the contract documents which includes:

A. Advertisement for Bids
B. Instructions for Bidders
C. Bid Proposal
D. Bid Form
E. Bid Sheets
F. Bid Bond
G. Performance Bond
H. Labor and Material Payment Bond
I. Non-Collusion Affidavit of Prim Bidder
J. Non-Collusion Affidavit of subcontractor
K. Certificate of Non-Segregated Facility
L. Certification of Bidder Regarding Equal Employment Opportunity
M. Certification of Subcontractor Regarding Equal Employment Opportunity
N. Sub-Contractor Listing Form
O. Acknowledgement of Receipt Form
P. Campaign Contribution Disclosure Form
Q. Resident Veterans Preference Certification
R. N. M. Wage Determination
S. Sample Construction Contract
T. Specifications and Plans

Therefore, the Bidder hereby proposes to furnish all supervision, technical personnel, labor, materials, equipment, and services (including all utility and transportation services) required to complete the Solid Waste Abatement and Site Leveling of the Old Agua Fria Dump located in Santa Fe County, New Mexico, in accordance with the above listed documents.

(Amounts are to be shown in both words and figures. In case of discrepancy, the amount shown in words will govern). Bidder has provided unit price and total bid amount per each item on the bid form and the total sum price for the scope of work.

In submitting this bid, the Bidder understands that the right is reserved by Santa Fe County to reject any irregular or all bids, waive any technicalities in the bids, and accept the bid deemed to be in the best interest of the public and that Santa Fe County intends to award one contract (if at all) for the items bid. If written notice of the acceptance of this bid is mailed, telegraphed or otherwise delivered to the undersigned within ninety (90) days after the opening thereof or at any time thereafter before this bid is withdrawn, the undersigned agrees to execute and deliver the agreement in the prescribed form within ten (10) days after the agreement is presented to him for signature.

All Addenda pertaining to this Project shall be acknowledged by the Bidder in the spaces provided below:

Addendum No.	Date	Acknowledged by Bidder or Its Authorized Representative	Date Acknowledged
_____		_____	_____
_____		_____	_____
_____		_____	_____
_____		_____	_____

Failure to acknowledge receipt, as provided above, may be considered sufficient grounds for disqualification of the bidder and rejection of his proposal. It shall be the bidder's responsibility to become fully advised of all Addenda prior to submitting his bid.

The Bidder agrees to commence work under this Contract within fifteen (15) days after, a date to be specified in a written "Notice to Proceed" from Santa Fe County or its authorized agents. Bidder further agrees to pay liquidated damages as provided in the Contract Documents.

This Bid Proposal contains the following:

A. Bid Proposal
B. Bid Form
C. Bid Sheet
D. Non-Collusion Affidavit for Prime Bidder
E. Certification of Non-segregated Facilities
F. Certification of Bidder Regarding Equal Employment Opportunity
G. Bid Bond
H. Subcontractors Listing (as included in this packet)
I. Campaign Contribution Disclosure Form
J. Resident Preference Certificate, if applicable

Respectfully submitted:

Name of Bidder:

_____

By: _____
(Signature)

Title: _____

Date: _____

Telephone No.: _____

Official Address:

_____

_____

_____

*New Mexico Contractor's License Number and Types: _____

BID SHEETS
IFB 2019-0108-PW/KE
CONSTRUCTION SERVICES FOR THE NEW APPROXAMENTLY 5,400 SQ.FT. PUBLIG WORKS FACILITY EXPANSION ON PHASE II

Please offer your best price for the work required for the construction of a new approximately 5.400 sq. ft. Property Control Facility, located within the Public Works Campus at 424 NM 599, Santa Fe County. The lump sum base bid must include pricing for materials, equipment, labor, travel, and fees for any required permitting. Be advised that award may be made without discussion with bidders on offers received.

Item	**Description**
1.	**Construction services for the property Control Facility, located at 424 NM 599.**

LUMP SUM BASE BID: $_____
(WRITTEN IN NUMBERS)

LUMP SUM BASE BID: $_____
(WRITTEN IN WORDS)

Additive Alternate	**Description**
#A1	Provide and install the addition of a roof structure for the Vehicle Storage Shelter as indicated by the drawings and specifications, on the Concrete foundation with anchor bolts, (which are a part of the base bid).

LUMP SUM ADDITIVE ALTERNATE #1: $_____
(WRITTEN IN NUMBERS)

LUMP SUM ADDITIBE ALTERNATE #1: $_____
(WRITTEN IN WORDS)

(Exclusive of NM GRT and other applicable taxes)

NON-COLLUSION AFFIDAVIT OF PRIME BIDDER

STATE OF NEW MEXICO

COUNTY OF _____

_____ being first duly sworn, deposes and says that:

(1) They are the _____of_____the Bidder that has submitted the attached Bid Proposal;

(2) They are fully informed respecting the preparation and contents of the attached Bid Proposal and of all pertinent circumstances respecting such bid;

(3) Such bid is genuine and is not a collusive or sham bid;

(4) Neither the said bidder nor any of its officers, partners, owners, agents, representatives, employees or parties in interest, including this affiant, has in any way colluded, conspired, connived or agreed, directly or indirectly with any other bidder, firm or person to submit a collusive or sham bid in connection with the contract for which the attached bid has been submitted or to refrain from bidding in connection with such contract, or has in any manner, directly or indirectly, sought by agreement or collusion or communications or conference with any other bidder, or to secure through any collusion, conspiracy, connivance or unlawful agreement any advantage against the Contracting Agency or any person interested in the proposed contract; and

(5) The price or prices quoted in the attached bid are fair and proper and are not tainted by any collusion, conspiracy, connivance or unlawful agreement on the part of the bidder or any of its agents, representatives, owners, employees, or parties in interest, including this affiant.

(SIGNED) _____

TITLE _____

SUBSCRIBED AND SWORN to before me this ____day of _____2018.

_____
NOTARY PUBLIC

My Commission Expires _____

NON-COLLUSION AFFIDAVIT OF SUBCONTRACTOR

STATE OF NEW MEXICO

COUNTY OF _____

_____being first duly sworn, deposes and says that:

(1) It is the _____ of _____, hereinafter referred to as the "Subcontractor".
(2) It is fully informed respecting the preparation and contents of the Subcontractor's proposal submitted by the Subcontractor to _____, the Contractor, for certain work in connection with the _____ contract pertaining to the _____ project in_____.
(3) Such Subcontractors proposal is genuine and is not a collusive or sham proposal.
(4) Neither the Subcontractor nor any of its officers, partners, owners, agents, representatives, employees or parties in interest, including this affiant, has in any way colluded, conspired, connived or agreed, directly or indirectly with any other bidder, firm or person to submit a collusive or sham bid in connection with the contract for which the attached bid has been submitted or to refrain from bidding in connection with such contract, or has in any manner, directly or indirectly, sought by agreement or collusion or communications or conference with any other bidder, or to secure through any collusion, conspiracy, connivance or unlawful agreement any advantage against the Contracting Agency or any person interested in the proposed contract; and
(5) The price or prices quoted in the Subcontractor's proposal are fair and proper and are not tainted by any collusion, conspiracy, connivance or unlawful agreement on the part of the bidder or any of its agents, representatives, owners, employees, or parties in interest, including this affiant.

(SIGNED) _____

TITLE_____

SUBSCRIBED AND SWORN to before me this _____day of _____2018.

_____
Notary Public

My Commission Expires: _____

SUBCONTRACTS

A. The contractor shall not execute an agreement with any subcontractor or permit any subcontractor to perform any work included in this contract until it has submitted a Non-

Collusion Affidavit from the subcontractor, is substantially the form shown below, and has received written approval of such subcontractor from Santa Fe County.

B. No proposed subcontractor shall be disapproved by Santa Fe County except for cause.

C. The contractor shall be as fully responsible to Santa Fe County for the acts and omissions of its subcontractors and of persons either directly or indirectly employed by them, as it is for the acts and omissions of persons directly employed by them.

D. The contractor shall cause appropriate provision to be inserted in all subcontracts relative to the work to require compliance by each subcontractor with the applicable provisions of the contract for the improvements embraced.

E. Nothing contained in the contract shall create any contractual relation between any subcontractor and Santa Fe County.

CERTIFICATION OF NON-SEGREGATED FACILITIES

(Applicable to construction contracts and related subcontracts exceeding $10,000, which are not exempt from the Equal Opportunity Clause).

The construction contractor certifies that it does not maintain or provide for its employees any segregated facility at any of its establishments, and that it does not permit its employees to perform their services at any location, under its control, where segregated facilities are maintained. The construction contractor certifies further that it will not maintain or provide for its employees any segregated facilities at any of its establishments, and that it will not permit its employees to perform their services at any location, under its control, where segregated facilities are maintained. The construction contractor agrees that a breach of this certification is a violation of the Equal Opportunity Clause in this contract. As used in this certification, the term "segregated facilities" means any waiting room, work areas, rest rooms and wash rooms, restaurants and other eating areas, time clock, locker rooms and other storage or dressing areas, parking lots, drinking foundations, recreating or entertainment areas, transportation, and housing facilities provided for employees which are segregated by explicit directive or are in fact segregated on the basis of race, creed, color, or national origin, because of habit, local custom, or otherwise. The construction contractor agrees that (except where it has obtained identical certifications from proposed subcontractors for specific time periods) it will obtain identical certifications from proposed SUBCONTRACTORS prior to the award of subcontracts exceeding $10,000 which are not exempt from the provisions of the Equal Opportunity Clause and that it will retain such certifications in its files.

SIGNED: _____

TITLE: _____

SUBSCRIBED AND SWORN to before me this _____day of _____, 2018.

_____

NOTARY PUBLIC

My Commission Expires: _____

CERTIFICATION OF BIDDER REGARDING EQUAL EMPLOYMENT OPPORTUNITY

INSTRUCTIONS

This certification is required pursuant to Executive Order 11246 (30 F. R. 12319-25). The implementing rules and regulations provide that any bidder or perspective contractor, or any of their proposed subcontractors, shall state as an initial part of the bid or negotiations of the contract or subcontract whether it has participated in any previous contract or subcontract subject to the equal opportunity clause; and, if so, whether it has filed all compliance reports due under applicable instructions.

Where the certification indicates that the bidder has not filed a compliance report due under applicable instructions, such bidder shall be required to submit a compliance report within seven calendar days after bid opening. No contract shall be awarded unless such report is submitted.

CERTIFICATION OF BIDDER

Bidder's Name: _____

Address: _____

_____

1. Bidder has participated in a previous contract or subcontract subject to the Equal Opportunity Clause.

   Yes ____ No ____

2. Compliance reports were required to be filed in connection with such contract or subcontract.

   Yes ____ No ____

Certification -- The information above is true and complete to the best of my knowledge and belief.

_____

NAME AND TITLE OF SIGNER (PLEASE TYPE)

_____ _____

SIGNATURE DATE

CERTIFICATION OF SUBCONTRACTOR REGARDING EQUAL EMPLOYMENT OPPORTUNITY

INSTRUCTIONS

This certification is required pursuant to Executive Order 11246 (30 F. R. 12319-25). The implementing rules and regulations provide that any bidder or perspective contractor, or any of their proposed subcontractors, shall state as an initial part of the bid or negotiations of the contract or subcontract whether it has participated in any previous contract or subcontract subject to the equal opportunity clause; and, if so, whether it has filed all compliance reports due under applicable instructions.

Where the certification indicates that the bidder has not filed a compliance report due under applicable instructions, such bidder shall be required to submit a compliance report within seven calendar days after bid opening. No contract shall be awarded unless such report is submitted.

CERTIFICATION OF SUBCONTRACTOR

Subcontractor's Name: _____

Address: _____

_____

1. Subcontractor has participated in a previous contract or subcontract subject to the Equal Opportunity Clause.

   Yes ____ No ____

2. Compliance reports were required to be filed in connection with such contract or subcontract.

   Yes ____ No ____

Certification -- The information above is true and complete to the best of my knowledge and belief.

_____

NAME AND TITLE OF SIGNER (PLEASE TYPE)

_____ _____

SIGNATURE DATE

BID BOND

A. KNOW ALL MEN BY THESE PRESENT, THAT WE_____ _____hereinafter called the PRINCIPAL, as PRINCIPAL and the _____, of _____a Corporation duly organized under the laws of the State of _____, and authorized to do business in the State of New Mexico, hereinafter called the SURETY, as SURETY are held and firmly bound unto Santa Fe County, a Municipal Corporation, hereinafter called the OBLIGEE, in the sum of _____ DOLLARS ($_____) for the payment of which sum well and truly to be made, the said Principal and the said Surety, bind ourselves, our heirs, executors, administrators, successors, and assigns, jointly and severally, firmly be these presents.

WHEREAS, the Principal has submitted the accompanying bid, dated_____, 2018, for the construction services of the Property Control Facility located at 424 NM 599 in Santa Fe County, New Mexico.

B. NOW, THEREFORE, if the Obligee shall accept the bid of the Principal and the Principal shall enter into a contract with the Obligee in accordance with the terms of such bid, and give such bond of bonds as may be specified in the bidding of Contract Documents with good and sufficient surety for the faithful performance of such contract and for the prompt payment of labor and material furnished in the prosecution thereof of in the event of the failure of the Principal to enter such contract and give such bond or bonds, if the Principal shall pay to the Obligee the difference not to exceed the penalty hereof between the amount specified in said bid and such larger amount for which the Obligee may in good faith contract with another party of perform the work covered by said bid, then this obligation shall be null and void, otherwise to remain in full force and effect.

C. SIGNED AND SEALED THIS_____DAY OF _____, 2018.

_____
BIDDER

By: _____
PRINCIPAL

(SEAL)

_____
WITNESS

By: _____
SURETY

_____
WITNESS

Title: _____

PERFORMANCE BOND

A. KNOW ALL MEN BY THESE PRESENT, THAT WE _____ _____, as PRINCIPAL hereinafter called the "CONTRACTOR" and _____ _____, as SURETY hereinafter called the "SURETY", are held and firmly bound unto OBLIGEE Santa Fe County, a Political Subdivision of the State of New Mexico, hereinafter called the "COUNTY", in the sum of_____($_____) dollars for the payment whereof CONTRACTOR and SURETY bind themselves, their heirs, executors, administrators, successors and assigns, jointly and severally, firmly by these presents.

B. WHEREAS, the CONTRACTOR has a written contract dated _____, 2018, with the COUNTY for the Construction of the Property Control Facility, located at 424 NM 599 in Santa Fe County, New Mexico, in accordance with drawings and specifications which contract is referenced made part hereof, and is hereinafter referred to as the "Contract."

C. NOW, THEREFORE, THE CONDITION OF THIS OBLIGATION is such that, if CONTRACTOR shall promptly and faithfully perform said Contract (including any amendment thereto), then this obligation shall be null and void; otherwise it shall remain in full force and effect until the COUNTY shall by written instrument notify the SURETY that the obligation is discharged, except that the obligation shall continue for at least three (3) months following the expiration of the term of the Contract.

1. The SURETY hereby waives notice of any alteration or extension of the Contract time made by the COUNTY.

2. Whenever CONTRACTOR shall be, and is declared by the COUNTY to be in default under the Contract, the COUNTY having performed the COUNTY'S obligations thereunder, the SURETY must promptly remedy the default and shall promptly:

   (1) Complete the Contract in accordance with its terms and conditions, or

   (2) Obtain a bid or bids for submission to the COUNTY for completing the Contract in accordance with its terms and conditions, and upon determination by the COUNTY and SURETY of the lowest responsible bidder, arrange for a contract between such bidder and Santa Fe County, and make available as work progresses (even though there should be a default or a secession of defaults under the Contract or contracts of completion arranged under this paragraph) sufficient funds to pay the cost of completion less the balance of the Contract price, but not exceeding, including other costs and damages for which the SURETY may be liable hereunder, the amount set forth in the first paragraph hereof. The term "balance of the Contract price" as used in this paragraph, shall mean the total amount payable by the COUNTY to

CONTRACTOR under the Contract and any amendments thereto, less the amount properly paid by the COUNTY to CONTRACTOR.

D. No right of action shall accrue on this Performance Bond to or for the use of any person or corporation other than Santa Fe County named herein or the heirs, executors, administrators, or successors of Santa Fe County.

E. This Bond shall be enforceable without the need to have recourse to any judicial or arbitral proceedings.

SIGNED AND SEALED THIS_____DAY OF _____, 2018.

_____
CONTRACTOR – PRINCIPAL (signature)

By: _____
(Printed name and title)

_____ (seal)
NOTARY PUBLIC

My Commission expires: _____

_____
SURETY (signature)

_____
(Printed name and title)

_____ (seal)
NOTARY PUBLIC

My Commission expires: _____

_____
SURETY'S Authorized New Mexico Agent

LABOR AND MATERIAL PAYMENT BOND

KNOW ALL MEN BY THESE PRESENT, THAT WE_____ _____as PRINCIPAL hereinafter called the "PRINCIPAL and _____as SURETY hereinafter called the "SURETY", are held and firmly bound unto Santa Fe County, a Political Subdivision of the State of New Mexico as OBLIGEE hereinafter called the "COUNTY", for the use and benefit of any claimants as herein below defined, in the amount of _____($.) dollars for the payment whereof PRINCIPAL and SURETY bind themselves, their heirs, executors, administrators, successors, and assigns, jointly and severally, firmly by these presents.

WHEREAS, the PRINCIPAL has a written contract dated _____, 2018, with the COUNTY for the Construction of the Property Control Facility located at 424 NM 599 in Santa Fe County, New Mexico, which must be constructed in accordance with drawings and specifications which contract is referenced and made a part hereof, and is hereinafter referred to as the "Contract."

NOW, THEREFORE, THE CONDITION OF THIS OBLIGATION is such that, if PRINCIPAL shall promptly make payment to all claimants as hereinafter defined, for all labor and material used or reasonably required for use in the performance of the Contract, then this obligation shall be void; otherwise, it shall remain in full force and effect, subject to the following conditions:

1. A claimant is defined as one having a direct contract with the PRINCIPAL or with a subcontractor of the PRINCIPAL for labor, material, or both, used or reasonably required for use in the performance of the Contract, labor and material being construed to include but not be limited to that part of water, gas, power, light, heat, oil, gasoline, telephone services or rental of equipment directly applicable to the Contract.

2. The above named PRINCIPAL and SURETY hereby jointly and severally agree with the COUNTY that every claimant as herein defined, who has not been paid in full before the expiration of a period of ninety (90) days after the date on which the last of such claimant's work or labor was done or performed, or materials were furnished by such claimant, prosecute a suit to final judgment for such sum or sums as may be justly due claimant, and have execution thereof. The COUNTY shall not be liable for payment of any cost or expenses of any such suit.

3. No suit or action shall be commenced hereunder by any claimant:

    a. Unless claimant, or other than one having a direct contract with the PRINCIPAL, shall have written notice in the form of an sworn statement to the COUNTY and any one or both of the following: the PRINCIPAL or SURETY above named, within ninety (90) days after such said claim is made or suit filed, stating with substantial accuracy the amount claimed and the name of the party to whom the materials were furnished, or for whom the work or labor was done or performed.

b. Such notice shall be served by mailing the same by registered mail or certified mail, postage prepaid, in an envelope addressed to the COUNTY, PRINCIPAL or SURETY, at any place where an office is regularly maintained by said COUNTY, PRINCIPAL or SURETY for the transaction of business, or served in any manner in which legal process may be served in the State in which the aforesaid project is located, save that such service need not be made by a public officer.

4. Any suit under this Labor and Material Bond must be instituted in accordance with the statute of limitation under Section 37-1-3 NMSA 1978.

5. No right of action shall accrue on this Bond to or for the use of any person or corporation other than subcontractors or sub-subcontractors of the said Contract between PRINCIPAL and Santa Fe County named herein.

SIGNED AND SEALED THIS_____DAY OF _____, 2018.

_____
CONTRACTOR – PRINCIPAL (signature)

By: _____
(Printed name and title)

_____ (seal)
NOTARY PUBLIC

My Commission expires: _____

_____
SURETY (signature)

_____
(Printed name and title)

_____ (seal)
NOTARY PUBLIC

My Commission expires: _____

_____
SURETY'S Authorized New Mexico Agent

SUBCONTRACTOR LISTING

1. To be fully executed and included with Bid as a condition of the Bid (13-4-31 through 13-4-42 NMSA 1978).

2. For the purposes of this Project all subcontractors, regardless of contract amount, must be listed on the subcontractor list.

3. The Bidder shall list the Subcontractor's Name, the City or County of the Place of Business and the Category of Work that will be done by each Subcontractor

Trade:	Name of Subcontractor:	
Address:		
Telephone No:	License No:	NM Dept of Workplace Solutions Registration No.
Signature of Subcontractor (To be obtained after award of contract):		
Trade:	Name of Subcontractor:	
Address:		
Telephone No:	License No:	NM Dept of Workplace Solutions Registration No.
Signature of Subcontractor (To be obtained after award of contract):		
Trade:	Name of Subcontractor:	
Address:		
Telephone No:	License No:	NM Dept of Workplace Solutions Registration No.
Signature of Subcontractor (To be obtained after award of contract):		
Trade:	Name of Subcontractor:	
Address:		
Telephone No:	License No:	NM Dept of Workplace Solutions Registration No.
Signature of Subcontractor (To be obtained after award of contract):		

Trade:	Name of Subcontractor:	
Address:		
Telephone No:	License No:	NM Dept of Workplace Solutions Registration No.
Signature of Subcontractor (To be obtained after award of contract):		
Trade:	Name of Subcontractor:	
Address:		
Telephone No:	License No:	NM Dept of Workplace Solutions Registration No.
Signature of Subcontractor (To be obtained after award of contract):		
Trade:	Name of Subcontractor:	
Address:		
Telephone No:	License No:	NM Dept of Workplace Solutions Registration No.
Signature of Subcontractor (To be obtained after award of contract):		
Trade:	Name of Subcontractor:	
Address:		
Telephone No:	License No:	NM Dept of Workplace Solutions Registration No.
Signature of Subcontractor (To be obtained after award of contract):		
Trade:	Name of Subcontractor:	
Address:		
Telephone No:	License No:	NM Dept of Workplace Solutions Registration No.
Signature of Subcontractor (To be obtained after award of contract):		

Trade:	Name of Subcontractor:	
Address:		
Telephone No:	License No:	NM Dept of Workplace Solutions Registration No.
Signature of Subcontractor (To be obtained after award of contract):		
Trade:	Name of Subcontractor:	
Address:		
Telephone No:	License No:	NM Dept of Workplace Solutions Registration No.
Signature of Subcontractor (To be obtained after award of contract):		
Trade:	Name of Subcontractor:	
Address:		
Telephone No:	License No:	NM Dept of Workplace Solutions Registration No.
Signature of Subcontractor (To be obtained after award of contract):		
Trade:	Name of Subcontractor:	
Address:		
Telephone No:	License No:	NM Dept of Workplace Solutions Registration No.
Signature of Subcontractor (To be obtained after award of contract):		
Trade:	Name of Subcontractor:	
Address:		
Telephone No:	License No:	NM Dept of Workplace Solutions Registration No.
Signature of Subcontractor (To be obtained after award of contract):		

APPENDIX A
ACKNOWLEDGEMENT OF RECEIPT
IFB# 2019-0108-PW/KE
CONSTRUCTION OF THE PROPERTY CONTROL FACILITY
LOCATED AT 424 NM 599 SANTA FE, NM

In acknowledgement of receipt of this Invitation for Bids the undersigned agrees that he/she has received a complete copy, beginning with the title page, and ending with the contractual documents. Completed forms must be submitted to Karen K. Emery no later than November 29, 2018 to receive any addenda for this solicitation.

The acknowledgement of receipt should be signed and returned to Karen K. Emery. Bidders that return this form in a timely manner will receive copies of addenda to this IFB. (Please Print)

FIRM: _____

REPRESENTED BY: _____

TITLE: _____

PHONE NO.: _____

FAX NO.: _____

E-MAIL ADDRESS: _____

MAILING ADDRESS: _____

_____

_____

DELIVERY ADDRESS: _____

_____

_____

By: _____ Date: _____
(Signature)

Name: _____
(Printed)

Title: _____

This name and address will be used for all correspondence related to the Invitations For Bid.

Karen K. Emery
Santa Fe County
Purchasing Division
142 W. Palace Avenue
Santa Fe, NM 87504
Phone: (505) 992-6759 Fax: (505) 989-3243
E-mail: kkemery@santafecountynm.gov

APPENDIX B

CAMPAIGN CONTRIBUTION DISCLOSURE FORM

Pursuant to the Procurement Code, Sections 13-1-28, et seq., NMSA 1978 and NMSA 1978, § 13-1-191.1 (2006), as amended by Laws of 2007, Chapter 234, any prospective contractor seeking to enter into a contract with any state agency or local public body **for professional services, a design and build project delivery system, or the design and installation of measures the primary purpose of which is to conserve natural resources** must file this form with that state agency or local public body. This form must be filed even if the contract qualifies as a small purchase or a sole source contract. The prospective contractor must disclose whether they, a family member or a representative of the prospective contractor has made a campaign contribution to an applicable public official of the state or a local public body during the two years prior to the date on which the contractor submits a proposal or, in the case of a sole source or small purchase contract, the two years prior to the date the contractor signs the contract, if the aggregate total of contributions given by the prospective contractor, a family member or a representative of the prospective contractor to the public official exceeds two hundred and fifty dollars ($250) over the two year period.

Furthermore, the state agency or local public body may cancel a solicitation or proposed award for a proposed contract pursuant to Section 13-1-181 NMSA 1978 or a contract that is executed may be ratified or terminated pursuant to Section 13-1-182 NMSA 1978 of the Procurement Code if: 1) a prospective contractor, a family member of the prospective contractor, or a representative of the prospective contractor gives a campaign contribution or other thing of value to an applicable public official or the applicable public official's employees during the pendency of the procurement process or 2) a prospective contractor fails to submit a fully completed disclosure statement pursuant to the law.

The state agency or local public body that procures the services or items of tangible personal property shall indicate on the form the name or names of every applicable public official, if any, for which disclosure is required by a prospective contractor.

THIS FORM MUST BE INCLUDED IN THE REQUEST FOR PROPOSALS AND MUST BE FILED BY ANY PROSPECTIVE CONTRACTOR WHETHER OR NOT THEY, THEIR FAMILY MEMBER, OR THEIR REPRESENTATIVE HAS MADE ANY CONTRIBUTIONS SUBJECT TO DISCLOSURE.

The following definitions apply:

"**Applicable public official**" means a person elected to an office or a person appointed to complete a term of an elected office, who has the authority to award or influence the award of the contract for which the prospective contractor is submitting a competitive sealed proposal or who has the authority to negotiate a sole source or small purchase contract that may be awarded without submission of a sealed competitive proposal.

"**Campaign Contribution**" means a gift, subscription, loan, advance or deposit of money or other thing of value, including the estimated value of an in-kind contribution, that is made to or received by an applicable public official or any person authorized to raise, collect or expend contributions on that official's behalf for the purpose of electing the official to statewide or local office. "Campaign Contribution" includes the payment of a debt incurred in an election campaign, but does not include the value of services provided without compensation or unreimbursed travel or other personal expenses of individuals who volunteer a portion or all of their time on behalf of a candidate or political committee, nor does it include the administrative or solicitation expenses of a political committee that are paid by an organization that sponsors the committee.

"**Family member**" means spouse, father, mother, child, father-in-law, mother-in-law, daughter-in-law or son-in-law of (a) a prospective contractor, if the prospective contractor is a natural person; or (b) an owner of a prospective contractor.

"**Pendency of the procurement proces**s" means the time period commencing with the public notice of the request for proposals and ending with the award of the contract or the cancellation of the request for proposals.

"**Prospective contractor**" means a person or business that is subject to the competitive sealed proposal process set forth in the Procurement Code or is not required to submit a competitive sealed proposal because that person or business qualifies for a sole source or a small purchase contract.

"**Representative of a prospective contractor**" means an officer or director of a corporation, a member or manager of a limited liability corporation, a partner of a partnership or a trustee of a trust of the prospective contractor.

Name(s) of Applicable Public Official(s) if any: _____
(Completed by State Agency or Local Public Body)

DISCLOSURE OF CONTRIBUTIONS BY PROSPECTIVE CONTRACTOR:

Contribution Made By: _____

Relation to Prospective Contractor: _____

Date Contribution(s) Made: _____

_____

Amount(s) of Contribution(s) _____

_____

Nature of Contribution(s) _____

_____

Purpose of Contribution(s) _____

_____

(Attach extra pages if necessary)

_____ _____
Signature Date

_____
Title (position)

--OR—

NO CONTRIBUTIONS IN THE AGGREGATE TOTAL OVER TWO HUNDRED FIFTY DOLLARS ($250) WERE MADE to an applicable public official by me, a family member or representative.

_____ _____
Signature Date

_____
Title (Position)

APPENDIX C

Resident Veterans Preference Certification

_____ (NAME OF CONTRACTOR) hereby certifies the following in regard to application of the resident veterans' preference to this procurement.

Please check the box below:

☐ I declare under penalty of perjury that my business prior year revenue starting January 1 ending December 31 is up to $3M allowing me the 10% preference discount on this solicitation. I understand that knowingly giving false or misleading information about this fact constitutes a crime.

"I agree to submit a report or reports to the State Purchasing Division of the General Services Department declaring under penalty of perjury that during the last calendar year starting January 1 and ending on December 31, the following to be true and accurate:

"In conjunction with this procurement and the requirements of this business application for a Resident Veteran Business Preference/Resident Veteran Contractor Preference under Sections 13-1-21 or 13-1-22 NMSA 1978, which awarded a contract which was on the basis of having such veterans preference, I agree to report to the State Purchasing Division of the General Services Department the awarded amount involved. I will indicate in the report the award amount as a purchase from a public body or as a public works contract from a public body as the case may be."

"I understand that knowingly giving false or misleading information on this report constitutes a crime".

I declare under penalty of perjury that this statement is true to the best of my knowledge. I understand that giving false or misleading statements about material fact regarding this matter constitutes a crime.

_____ _____

(Signature of Business Representative)* (Date)

*Must be an authorized signatory of the Business.

The representations made in checking the box constitutes a material representation by the business that is subject to protest and may result in denial of an award or un-award of the procurement involved if the statements are proven to be incorrect.

SIGNED AND SEALED THIS_____DAY OF _____, 2018.

_____

NOTARY PUBLIC

My Commission Expires:

_____

APPENDIX D

SAMPLE
CONSTRUCTION SERVICE AGREEMENT

AGREEMENT BETWEEN SANTA FE COUNTY AND CONTRACTOR FOR CONSTRUCTION SERVICES

SANTA FE COUNTY
ADMINISTRATIVE SERVICES DEPARTMENT
PURCHASING DIVISION
2014 EDITION

[Changes, additions, deletions and/or any modifications other than those agreed upon by the parties upon execution of this contract, without the written consent of Santa Fe County shall render this document null and void.]

Hereafter "County":

Katherine Miller, County Manager
Santa Fe County
PO Box 276
Santa Fe, New Mexico 87504-0276
TELEPHONE: 505-986-6200
FAX: 505-995-2740

Hereafter "Contractor":

_____
_____
_____
_____
TELEPHONE: _____
E-MAIL ADDRESS: _____

ARCHITECT [or ENGINEER]

NAME: Baer Architecture NM and McClain & Yu Architecture and Design
ADDRESS: 227 East Palace Ave., Ste. C
Santa Fe, NM 87501
TELEPHONE: 505-470-6835
E-MAIL ADDRESS: allanbaer@comcast.net

Table of Contents

Page No

RECITALS 10

Article 1 The Contract Documents.....10
1.1 Documents 10
1.2 Certificates and Documentation.....10

Article 2 The Work 11
2.1 The Work.....11

Article 3 Effective Date, Time of Commencement, Substantial Completion and Amendments 11
3.1 Effective Date 11
3.2 Time of Commencement 11
3.3 Substantial Completion.....11
3.4 Time for Completion and Liquidated Damages.....12
3.5 Amendments 13

Article 4 Contract Sum.....13
4.1 Lump Sum.....13
4.2 Contract Amount 13

Article 5 Progress Payments 14
5.1 Progress Payments 14

Article 6 Final Payment 15
6.1 Final Payment.....15
6.2 Acceptance of Final Payment Constitutes Release.....15

GENERAL CONDITIONS

1. Definitions 17
1.1 Application for Payment.....17
1.2 Change Order 17
1.3 Calendar Day 17
1.4 Contract Period.....17
1.5 Contractor 17
1.6 Construction Documents.....17
1.7 Construction Schedule 17
1.8 Day.....17
1.9 Labor and Material Payment Bond.....17

1.10 Lump Sum Agreement.....18

1.11 Lump Sum Bid 18
1.12 Lump Sum Contract 18
1.13 Payment Bond 18
1.14 Performance Bond 18
1.15 Progress Payment 18
1.16 Progress Schedule 18
1.17 Punch List 18
1.18 Schedule of Values 18
1.19 Services 18
1.20 Stipulated Sum Agreement 19
1.21 Subcontractor 19
1.22 Unit Price Contract 19
1.23 Unit Prices 19
1.24 Working Day 19
1.25 Work on the Project 19

2. Contract and Contract Documents 19
2.1 Entire Agreement 19
2.2 Relationship of Contract Documents 19
2.3 Conflicting Conditions 19

3. Plans, Specifications and Addenda 20
3.1 The plans, specifications and addenda 20
3.2 Certificates and Documents Incorporated 20

4. Contract Security - Bonds 20
4.1 Performance Bond 20
4.2 Payment Bond 20
4.3 Additional or Substitute Bond 20
4.4 Labor and Material Bond 20

5. Terms and Meanings 20
5.1 Words and Phrases 21
5.2 Gender, Singular/Plural 21
5.3 Captions & Section Headings 21
5.4 Interchangeable Terms 21

6. Compliance with Applicable Law, Choice of Law 21
6.1 Agreement governed by the laws of the State of New Mexico 21
6.2 Contractor shall comply with all applicable laws, ordinances & regulations 21
6.3 Minimum Wage Rate 21
6.4 Litigation shall be federal and state district courts of New Mexico 21

6.5 Bribes, Kickbacks and Gratuities....21
6.6 New Mexico Tort Claims Act....21
6.7 Provision Required by Law Deemed Inserted....22

7. Effective Date & Term....22
7.1 Agreement shall become effective....22
7.2 Substantial Completion....2

8. Termination....22
8.1 Termination of Agreement for Cause....23
8.2 Termination for Convenience....23
8.3 Right of the County to Terminate Contract....23

9. Appropriations & Authorizations....23

10. Amendments – Change Orders....23

11. Indemnification....23
11.1 Contractor shall indemnify....23
11.2 County shall have right to control and participate in defense of demand or suit....24
11.3 Contractor's obligations shall not be limited by provisions of insurance policy....24

12. Aggrievement Procedure During Contract Administration....24
12.1 Claims, Disputes or other matters....24
12.2 Settlement Agreement....24
12.3 Contractor shall carry on Work during dispute resolution proceedings....24

13. Dispute Resolution....24
13.1 Mediation....24
13.2 Mediation Process....24
13.3 Litigation....25

14. Insurance....25
14.1 Insurance required before contractor commences work....2
14.2 Proof of Carriage of Insurance....25
14.3 General Conditions....25
14.4 General Liability Insurance, including automobile....25
14.5 Subcontractor's Public Liability & Property Damage Insurance....25
14.6 Worker's Compensation Insurance....25
14.7 Scope of Insurance and Special Hazards....26
14.8 Builder's Risk Insurance....26

14.9 Increased Limits 26
14.10 Additional Insured 26

15. Independent Contractor 26
15.1 Contractor and its agents are independent contractors 26
15.2 Contractor shall not subcontractor without written approval 27
15.3 Contractor shall maintain detailed time records 27

16. Conflict of Interest of Officers or Employees of the Local Jurisdiction 27
16.1 No officer or employee shall have any interest shall have any interest 27
16.2 No official of the County shall be interested personally in this contract 27
16.3 Contractor warrants no conflict of interest 27

17. Assignment 27
17.1 Contractor shall not assign or transfer any interest in this Agreement 27

18. Subcontracting 28
18.1 Contractor shall not subcontract without written notice to County 28
18.2 Contractor shall provide listing of subcontractors 28
18.3 Contractor shall adhere to all provisions of Subcontractor's Fair Practices Act 28
18.4 Contractor shall provide Non-Collusion and EEO forms for all subcontractors 28
18.5 Contractor shall not award any work without written notice to County 28
18.6 Contractor shall be responsible for acts and omissions of subcontractors 28
18.7 Contractor shall cause appropriate provisions in all subcontracts 28
18.8 Nothing shall create contractual relation between County and subcontractors 28
18.9 New Mexico Little Miller Act 28

19. Personnel 29
19.1 All work performed by Contractor 29
19.2 Contractor shall secure all qualified personnel required to perform work 29

20. Notices 29
20.1 Notice required shall be in writing 29
20.2 Nothing shall preclude the giving of written Notice 29

21. Release 29

22. Waiver 29

CONDITIONS OF THE WORK

1. Additional Instructions & Detail Drawings 31
1.1 Additional instructions & drawings as necessary 31

2. Shop or Setting Drawings 31
2.1 Contractor shall submit copies of shop or setting drawing.....31

3. Materials, Services and Facilities 31

4. Contractor's Title to Materials.....31
4.1 No materials or supplies shall be purchased by subject to chattel mortgage 31

5. Inspection and Testing of Materials.....32
5.1 All material and equipment shall be subject to adequate inspection 32
5.2 Materials of construction shall be subject to inspection and testing.....32

6. "Or Equal" Clause.....32
6.1 To establish a standard.....32

7. Patents.....32
7.1 Patented or Unpatented Invention.....32
7.2 License or Royalty Fees.....32
7.3 Copyrighted Design 32

8. Surveys, Permits and Regulations.....33
8.1 County will furnish all surveys 33
8.2 Contractor shall procure and pay all permits, licenses and approvals 33
8.3 Contractor shall comply with all laws, ordinances, rules orders & regulations 33

9. Contractor's Obligations.....33
9.1 Contractor shall perform all work and furnish all materials, equipment, machinery.....33
9.2 Contractor shall complete entire work.....33

10. Weather Conditions 33
10.1 Temporary suspension of Work.....33

11. Protection of Work and Property - Emergency.....34
11.1 Contractor shall safeguard County's property 34
11.2 Emergency which threatens loss or injury of property 34
11.3 Contractor shall act as instructed or authorized.....34
11.4 Reimbursement claimed by Contractor 34

12. Inspection.....34

12.1 County shall be permitted to inspect all work, materials, payrolls, records 34

13. Reports, Records and Data.....34
13.1 Contractor shall submit to County schedules, payrolls, reports, estimates.....34

14. Superintendent by Contractor 34
14.1 Contractor shall employ a construction superintendent.....34

15. Changes in Work.....35
15.1 No changes in Work without written approval 35

16. Extras 35
16.1 County may order extra Work 35

17. Inspection of Services 35
17.1 Contractor shall provide inspection system 35
17.2 County has the right to inspect and test all services 35
17.3 Contractor shall furnish all reasonable facilities and assistance 35
17.4 If any services do not conform with Contract requirements.....36
17.5 County may perform the services and charge Contractor.....36

18. Correction of Work 36
18.1 Work shall be made good if failure to meet County approval 36

19. Warranty of Construction 36
19.1 Warrants that Work conforms with Contract requirements.....36
19.2 One year warranty.....36
19.3 Contractor shall remedy any failure to conform 36
19.4 Contractor shall restore any Work damaged.....37
19.5 County shall notify Contractor of any failure, defect or damage 37
19.6 If Contractor fails to remedy.....37
19.7 Contractor shall obtain all warranties, executed in writing 37
19.8 Contractor's warranty has expired 37
19.9 Defect in County furnished material or design 37
19.10 County's rights under the Inspection and Acceptance Clause.....37

20. Subsurface Conditions Found Different 37
20.1 Subsurface conditions materially differing from plans and specifications.....37

21. Claims for Extra Cost.....37
21.1 No claim for extra work or cost 37

22. Construction Schedule and Periodic Estimates.....38
22.1 Estimated construction progress schedule 38

22.2 Progress Schedule 38

23. Assignments 38
23.1 Contractor shall not assign 38

24. Mutual Responsibility of Contractors 38
24.1 Acts of Negligence 38

25. Separate Contract 39
25.1 Coordination with other contractors 39

26. Architect/Engineer's Authority 39
26.1 Orders & Directions to execution of the Work 39
26.2 Decisions concerning meaning and intent 39

27. Stated Allowances 39
27.1 Contract sum for all allowances 39

28. Use of Premises and Removal of Debris 40
28.1 Contractor undertakes at own expense 40

29. Quantities of Estimate 40
29.1 Increase and decrease of estimated quantities 40

30. Lands and Right-of-Way 40
30.1 County shall obtain all lands and rights-of way 40

31. General Guaranty 40
31.1 Work not done in accordance with contract documents 40

32. Protection of Lives and Health 41
32.1 Protection of persons and property 41

33. Interest of Member 41
33.1 BCC shall not have any share or interest 41

34. Other Prohibited Interests 41
34.1 No County official or others to be personally interested in Contract 41

35. Use & Occupancy Prior to Acceptance by County 41
35.1 Partial Occupancy by County 41

Attachment A Bid Sheets 42
Attachment B Addenda and Modifications 43
Exhibit A Project Manual 44
Exhibit B Technical Specifications 45

Exhibit C	Labor and Material Payment Bond	46
Exhibit D	Performance Bond	48
Exhibit E	Assignment of Antitrust Claims	50
Exhibit F	Certificate of Liability Insurance	51
Exhibit G	Notice of Contract Award	52
Exhibit H	Notice to Proceed	53
Exhibit I	Change Order)	54
Exhibit J	Certificate of Substantial Completion	56

RECITALS

WHEREAS, in accordance with Section 13-1-103 through Section 13-1-110 NMSA 1978, the County issued Invitation for Bid (IFB) No. 2019-0108-PW/KE for construction services for the Property Control Facility, 424 NM 599, Santa Fe, NM; and

WHEREAS, the Contractor submitted its bid, dated _____ in response to IFB No. 2019-0108-PW/KE; and

WHEREAS, the County is authorized to enter into a construction contract for the Project pursuant to Sections 13-1-100, NMSA 1978; and

WHEREAS, the Contractor hereby represents that it is a licensed contractor of the State of New Mexico pursuant to Chapter 60, Article 13 NMSA 1978; and

WHEREAS, the Owner agrees to hire the Contractor, and the Contractor agrees to provide Construction Services as required herein for the Project in accordance with the terms and conditions set forth in this Agreement; and

WHEREAS, the County requires the services of the Contractor, and the Contractor is willing to provide these services and both parties wish to enter into this Agreement.

ARTICLE 1
THE CONTRACT DOCUMENTS

1.1 DOCUMENTS

The contract documents consist of the following:

-Agreement between County and Contractor	
-General Conditions of the Construction Contract	
-Conditions of the Work of the Construction Contract	
-Bid Sheet	Attachment A
-Addenda and Modifications issued before and after execution of this Contract	Attachment B

1.2 CERTIFICATES AND DOCUMENTATION

The following certificates and documentation are hereby attached as exhibits as follows:

Project Manual	Exhibit A
Technical Specifications as listed in Plan Set	Exhibit B
Labor and Material Payment Bond	Exhibit C
Performance Bond	Exhibit D
Assignment of Antitrust Claims	Exhibit E
Certificate of Insurance	Exhibit F

Notice of Award	Exhibit G
Notice to Proceed	Exhibit H
Change Order	Exhibit I
Certificate of Substantial Completion	Exhibit J

ARTICLE 2
THE WORK

2.1 THE WORK

The Contractor shall perform all the Work required by the Contract Documents for the following:

Construction of a freestanding building with a 5,467 gross square foot footprint, accommodating offices for Property Control managers and staff, plan room, break/meeting room, ADA compliant restrooms/locker rooms, and high-bay vehicle workshop with associated tool rooms, safety center, and a 465 net square foot storage mezzanine, as specified in the Project Manual and the construction documents.

ARTICLE 3
EFFECTIVE DATE, TIME OF COMMENCEMENT, SUBSTANTIAL COMPLETION AND AMENDMENTS

3.1 EFFECTIVE DATE

The Effective Date of this Agreement is the last date of signature by the County.

3.2 TIME OF COMMENCEMENT

The work to be performed under this Contract shall be commenced no later than ten (10) consecutive calendar days after the date of written Notice to Proceed issued by the County, hereto attached as Exhibit H.

3.3 SUBSTANTIAL COMPLETION

The Contractor shall achieve Substantial Completion of the entire work no later than 300 calendar days from the date of the Notice to Proceed, except as hereafter extended by valid written Change Order. A Certificate of Substantial Completion, attached hereto as Exhibit J, will be issued by the County to the Contractor, as adjusted by any Change Order, attached hereto as Exhibit I.

3.4 TIME FOR COMPLETION AND LIQUIDATED DAMAGES

Should the Contractor neglect, refuse, or otherwise fail to complete the Work within the time specified in this Article, the Contractor agrees that Liquidated Damages in the amount of five

hundred dollars ($500.00), shall be assessed per each calendar day that expires after the date of substantial completion, as adjusted by any change order, and until issuance by the County of a certificate of Substantial Completion in accordance with Paragraph 7 (Effective Date and Term) of the General Conditions.

A. It is hereby understood and mutually agreed, by and between the Contractor and the County, that the date of beginning and the time for completion as specified in the contract of the work to be done hereunder are *essential conditions* of this contract and it is further mutually understood and agreed that the work outlined in this contract shall be commenced on a date to be specified in the "Notice to Proceed."

B. The Contractor agrees that work shall be prosecuted regularly, diligently and uninterruptedly at such rate of progress as will insure full completion thereof within the time specified. It is expressly understood and agreed, by and between the Contractor and the County, that the time for the completion of the work described herein is a reasonable time for the completion of the same, taking into consideration the average climatic range and usual industrial conditions prevailing in this locality.

C. If the Contractor shall neglect, fail or refuse to complete the work within the time herein specified or any proper extension thereof granted by the County, then the Contractor does hereby agree, as a part consideration for the awarding of this contract, to pay to the County the amount specified in the contract, not as a penalty but as liquidated damages for such breach of contract as herein set forth, for each and every calendar day that the contract shall be in default after the time stipulated in the contract for completing the work.

D. The amount is fixed and agreed upon by and between the Contractor and the County because of the impracticability and extreme difficulty of fixing and ascertaining the actual damages the County would in such event sustain, and the amount is agreed to be the amount of damages which the County would sustain and the amount shall be retained from time to time by the County from current periodical estimates.

E. It is agreed that time is of the essence of each and every portion of this contract and of the specifications wherein a definite and certain length of time is fixed for the performance of any act whatsoever and where under the contract an additional time is allowed for the completion of any work, the new time limit fixed by such extension shall be of the essence of this contract. Provided that the Contractor shall not be charged with liquidated damages or any excess cost when the County determines that the Contractor is without fault and the Contractor's reasons for the time extension are acceptable to the County. Provided that the Contractor shall not be charged with liquidated damages or any excess cost when the delay in completion of the work is due:

1. To any preference, priority or allocation order duly issued by the County;
2. To unforeseeable cause beyond the control and without the fault or negligence of the Contractor, including but not restricted to, acts of God, or of the public enemy, acts of the County, acts of another contractor in the performance of a

contract with the County, fires, floods, epidemics, quarantine restrictions, strikes, freight embargoes, and severe weather;

3. To any delays of subcontractors or suppliers occasioned by any of the causes specified in subsections above.

F. Provided further, that the Contractor shall, within ten days from the beginning of such delay, unless the County shall grant a further period of time prior to the date of final settlement of the contract, notify the County in writing of the causes of the delay, who shall ascertain the facts and extent of the delay and notify the Contractor within a reasonable time of its decision in the matter.

3.5 AMENDMENTS

This Agreement may be amended by mutual agreement by both parties upon issuance of a Change Order by the County to the Contractor. Any such amendment shall be in accordance with Paragraph 10 (Amendments – Change Orders) of the General Conditions. Unless otherwise agreed to by the parties, an amendment shall not affect any outstanding Purchase Order(s) issued by the County prior to the effective date of the amendment.

ARTICLE 4
CONTRACT SUM

4.1 LUMP SUM

The County shall pay the Contractor in current funds for the performance of the Work, subject to additions and deductions by Change Order as provided in the Contract Documents, an agreed upon Lump Sum of (enter dollar amount in words) Dollars ($0.00 enter dollar amount), exclusive of New Mexico gross receipts tax.

4.2 CONTRACT AMOUNT

The Contract sum is determined as follows:	(insert data from bid form concerning base bid, alternates, etc.)	
Base Bid	$	
List Alternates, if applicable	$	
	$	
	$	
Total Contract Amount	**$**	, exclusive of NM grt

ARTICLE 5
PROGRESS PAYMENTS

5.1 PROGRESS PAYMENTS

Based upon an Application for Payment submitted to the County by the Contractor and Certificates for Payment issued by the County, the County shall make progress payments on account of the Contract sum to the Contractor as provided in the Contract documents for the period ending the last day of the month as follows:

A. No later than 21 working days following receipt by the County of an undisputed Application for Payment, one hundred percent (100%) of the portion of the Contract Sum properly allocable to labor, materials, and equipment incorporated in the Work and one hundred percent (100%) of the portion of the Contract Sum properly allocable to materials and equipment suitably stored at the site or some other location agreed upon in writing for the period covered by the Application for Payment, less the aggregate of previous payments made by the County; less such amounts as the Architect/ Engineer shall determine for all incomplete Work and unsettled claims as provided in the Contract Documents (Section 57-28-5, NMSA 1978).

B. When making payments, the County, Contractor or subcontractor shall not retain, withhold, hold back or in any other manner not pay amounts owed for work performed. For additional information regarding retainage and the Prompt Payment Act (refer to Section 57-28-5, NMSA 1978).

C. Contractors and subcontractors shall make prompt payment to their subcontractors and suppliers for amounts owed for work performed on the construction project within 21 days after receipt of payment from the County, contractor or subcontractor. If the contractor or subcontractor fails to pay its subcontractor and suppliers by first-class mail or hand delivery within twenty-one days after receipt of an undisputed request for payment, the contractor or subcontractor shall pay interest to its subcontractors and suppliers beginning on the 22nd day after payment was due, computed at one and one-half percent of the undisputed amount per month or fraction of a month until payment is issued. These payment provisions apply to all tiers of contractors, subcontractors and suppliers (Section 57-28-1 et. seq. NMSA 1978).

D. In preparing estimates the material delivered on the site and preparatory work done may be taken into consideration.

E. All material and work covered by partial payments made shall thereupon become the sole property of the County, but this provision shall not be construed as relieving the Contractor from the sole responsibility for the care and protection of materials and work upon which payments have been made or the restoration of any damaged work, or as a waiver of the right of the County to require the fulfillment of all of the terms of the contract.

F. County's right to withhold certain amounts and make application thereof. The Contractor agrees that it will indemnify and hold the County harmless from all claims growing out of the lawful demands of subcontractors, laborers, workmen, mechanics, material men, and furnisher of machinery and parts thereof, equipment, power tools, and all supplies, including commissary, incurred in the furtherance of the performance of this contract. The Contractor shall, at the County's request, furnish satisfactory evidence that all obligations of the nature hereinabove designated have been paid, discharged, or waived. If the Contractor fails so to do, then the County may, after having served written notice on the said Contractor, either pay unpaid bills, of which the County has written notice, direct, or withhold from the Contractor's unpaid compensation a sum of money deemed reasonably sufficient to pay any and all such lawful claims until satisfactory evidence is furnished that all liabilities have been fully discharged whereupon payment to the Contractor shall be resumed, in accordance with the terms of this contract, but in no event shall the provisions of this sentence be construed to impose any obligations upon the County to either the Contractor or its Surety. In paying any unpaid bills of the Contractor, the County shall be deemed the agent of the Contractor, and any payment so made by the County shall be considered as a payment made under the contract by the County to the Contractor and the County shall not be liable to the Contractor for any such payments made in good faith.

ARTICLE 6
FINAL PAYMENT

6.1 FINAL PAYMENT

The entire unpaid balance of the Contract Sum, shall be paid by the County to the Contractor within 30 calendar days after notification of the County by the Architect/Engineer that all incomplete and unacceptable work that was noted during the Substantial Completion Inspection and listed on the attachment to the Certificate of Substantial Completion has been corrected, and provided the Contract has been fully performed and a final Certificate for Payment has been issued by the Architect/Engineer. In addition, the Contractor shall provide to the County a certified statement of Release of Liens and Consent of Surety.

6.2 ACCEPTANCE OF FINAL PAYMENT CONTITUTES RELEASE

The acceptance by the Contractor of final payment shall be and shall operate as a release to the County of all claims and all liability to the Contractor for all things done or furnished in connection with this work and for every act and neglect of the County and others relating to or arising out of this work. No payment, however, final or otherwise, shall operate to release the Contractor or its sureties from any obligations under this contract or the Performance and Payment Bond.

IN WITNESS WHEREOF, the parties have duly executed this Agreement as of the date first written above.

SANTA FE COUNTY

_____
, Chair
Santa Fe County Board of County Commissioners
ATTESTATION

_____
Geraldine Salazar
Santa Fe County Clerk

Approved as to form:

_____ _____
R. Bruce Frederick Date
Santa Fe County Attorney

Finance Department:

_____ _____
Stephanie S. Clarke Date
Finance Director

CONTRACTOR:

_____ _____
Signature Date

_____
Print Name

_____
Print Title

GENERAL CONDITIONS
TO AGREEMENT BETWEEN SANTA FE COUNTY
AND CONTRACTOR
FOR CONSTRUCTION SERVICES

1.0 DEFINITIONS

The following terms as used in this contract are respectively defined as follows:

1.1 *Application for Payment* Contractor's written request for payment for completed portions of the work and, for materials delivered or stored and properly labeled for the respective project.

1.2 *Change Order* A written document between the County and the Contractor signed by the County and the Contractor authorizing a change in the work or an adjustment in the contract sum or the contract time. A change order may be signed by the Architect/Engineer, provided they have written authority from the County for such procedure and that a copy of such written authority is furnished to the Contractor upon request. The contract sum and the contract time may be changed only by change order. A change order may be in the form of additional compensation or time; or less compensation or time known as a Deduction (from the contract) the amount deducted from the contract sum by change order.

1.3 *Calendar Day* Each and every Day shown on the calendar, beginning and ending at midnight.

1.4 *Contract Period* The elapsed number of working days or calendar days from the specified date of commencing work to the specified date of completion, as specified in the contract.

1.5 *Contractor* is a person, firm or corporation with whom the contract is entered into with the County.

1.6 *Construction Documents* All drawings, specifications and addenda associated with a specific construction project.

1.7 *Construction Schedule* A schedule in form satisfactory to the County, showing the proposed dates of commencement and completion of each of the various subdivisions of work required under the contract documents and the anticipated amount of each monthly payment that will become due the Contractor in accordance with the progress schedule.

1.8 *Day* The word “day” means a calendar day of 24 hours measured from midnight to the next midnight.

1.9 *Labor and Material Payment Bond* A written form of security from a surety (bonding) company to the County, on behalf of an acceptable prime Contractor or

subcontractor, guaranteeing payment to the County in the event the Contractor fails to pay for all labor, materials, equipment, or services in accordance with the contract. (see Performance Bond and Surety Bond).

1.10 *Lump Sum Agreement (See Stipulated Sum Agreement)*

1.11 *Lump Sum Bid* A single entry amount to cover all labor, equipment, materials, services, and overhead and profit for completing the construction of a variety of unspecified items of work without the benefit of a cost breakdown.

1.12 *Lump Sum Contract* A written contract between the County and Contractor wherein the County agrees the pay the contractor a specified sum of money for completing a scope of work consisting of a variety of unspecified items or work.

1.13 *Payment Bond* A written form of security from a surety company to the County, on behalf of an acceptable prime contractor or subcontractor, guaranteeing payment to all persons providing labor, materials, equipment, or services in accordance with the contract.

1.14 *Performance Bond* A written form of security from a surety company to the County, on behalf of an acceptable prime contractor or subcontractor, guaranteeing the completion of the work in accordance with the terms of the contract.

1.15 *Progress Payment* A payment from the County to the Contractor determined by calculating the difference between the completed work and materials stored and a predetermined schedule of values or unit costs. (see Schedule of Values, Unit Costs).

1.16 *Progress Schedule* A pictorial or written schedule (including a graph or diagram) that shows proposed and actual start and completion dates of the various work elements.

1.17 *Punch list* a list of items to be completed or corrected, prepared by the Architect/Engineer, checked and augmented as required by the Contractor or Construction Manager is appended hereto as Exhibit J. Note: The failure to include any item on such list does not relieve the Contractor of the responsibility to complete all work in accordance with the contract documents.

1.18 *Schedule of Values* A statement furnished by the Contractor to the Architect or Engineer and the County reflecting the portions of the contract sum allotted for the various parts of the work and used as the basis for reviewing the Contractor's Applications for Payment.

1.19 *Services* Includes services performed, workmanship, and material furnished or utilized in the performance of services.

1.20 *Stipulated Sum Agreement* A written agreement in which a specific amount is set forth as the total payment for completing the contract (See Lump Sum Contract).

1.21 *Subcontractor* is a person, firm or corporation supplying labor and materials or only labor for work at the site of the project for, and under separate contract or agreement with, the Contractor.

1.22 *Unit Price Contract* A written contract wherein the County agrees to pay the Contractor a specified amount of money for each unit of work successfully completed as set forth in the contract.

1.23 *Unit Prices* A predetermined price for a measurement or quantity of work to be performed within a specific contract. The designated unit price would include all labor materials, equipment or services associated with the measurement or quantity established.

1.24 *Working Day* means every day except Saturday, Sunday and holidays recognized by Santa Fe County. Based on a review of weather that may adversely affect the Contractor's ability to effectively prosecute the Work, and the actual Work performed by the Contractor, the Architect or Engineer will determine (between the end of the day and noon of the next day) if the County will charge a Working Day. If the Contractor was able to effectively prosecute Work on a critical path item for six (6) or more hours on a Saturday, Sunday or County-recognized Holiday, the Architect or Engineer may charge a Working Day.

1.25 *Work on (at) the project* is work to be performed at the location of the project, including the transportation of materials and supplies to or from the location of the project by employees of the Contractor and any subcontractor.

2. CONTRACT AND CONTRACT DOCUMENTS

2.1 Entire Agreement. This Agreement represents the entire contract between the parties and, except as otherwise provided herein, may not be amended, changed, modified, or altered without the written consent of the parties hereto. This Agreement incorporates all of the conditions, agreements, and understandings between the parties concerning the subject matter of this Agreement, and all such conditions, understandings, and agreements have been merged into this written Agreement. No prior condition, agreement, or understanding, verbal or otherwise, of the parties or their agents shall be valid or enforceable unless incorporated in this written Agreement.

2.2 Relationship of Contract Documents. The Contract Documents are complementary, and any requirement of one Contract Document shall be as binding as if required by all.

2.3 Conflicting Conditions. Any provisions in any of the Contract Documents which may be in conflict or inconsistent with any of the paragraphs in these General Conditions shall be void to the extent of such conflict or inconsistency.

3. PLANS, SPECIFICATIONS AND ADDENDA

3.1 The plans, specifications and addenda, hereinafter enumerated in Article 1 of the Agreement Between County and Contractor for Construction shall form part of this Contract and the provisions thereof shall be as binding upon the parties hereto as if they were herein fully set forth. The table of contents, titles, headings, running headlines and marginal notes contained herein and in said documents are solely to facilitate reference to various provisions of the Contract Documents and in no way affect or limit the interpretation of the provisions to which they refer.

3.2 Certificates and Documents Incorporated. All certificates and documentation required by the provisions of the Agreement shall be attached to this Agreement at the time of execution, and are hereby incorporated by reference as though set forth in full in this Agreement to the extent they are consistent with its conditions and terms.

4. CONTRACT SECURITY – BONDS

4.1 Performance Bond. The Contractor shall furnish a performance bond in an amount at least equal to one hundred percent (100%) of the contract sum as security for the faithful performance of this contract. The performance bond and the payment bond may be in one or in separate instruments in accordance with local law.

4.2 Payment Bond. The Contractor shall provide payment bond in an amount not less than one hundred percent (100%) of the contract price or in a penal sum not less than that prescribed by state, territorial or local law, as security for the payment of all persons performing labor on the project under this contract, furnishing materials in connection with this contract and all of Contractor's requirements as specified in the contract documents. The Payment Bond shall remain in effect until one year after the date when final payment becomes due.

4.3 Additional or Substitute Bond. If at any time the County for justifiable cause shall be or become dissatisfied with any surety or sureties, then upon the Performance or Payment Bonds, the Contractor shall within five days after notice from the County so to do, substitute an acceptable bond (or bonds) in such form and sum and signed by such other surety or sureties as may be satisfactory to the County. The premiums on such bond shall be paid by the Contractor. No further payments shall be deemed due nor shall be made until the new surety or sureties shall have furnished such an acceptable bond to the County.

4.4 Labor and Material Bond. The Contractor shall provide to the County Labor and Material Bond in an amount equal to the required payments by the Contractor to pay specified subcontractors, laborers, and materials suppliers associated with the project.

5. TERMS AND MEANINGS

Terms used in this Agreement that are defined in the Conditions of the Contract shall have the meanings designated in those Conditions.

5.1 Words and Phrases. Words, phrases, and abbreviations which have well-known technical or trade meanings used in the Contract Documents shall be used according to such recognized meanings. In the event of a conflict, the more stringent meaning shall govern.

5.2 Gender, Singular/Plural. Words of any gender used in this Agreement shall be held and construed to include any other gender, and words in the singular number shall be held to include the plural, unless the context otherwise requires.

5.3 Captions and Section Headings. The captions and section headings contained in this Agreement are for convenience of reference only, and in no way limit, define, or enlarge the terms, scope and conditions of this Agreement.

5.4 Interchangeable Terms. For purposes of all provisions within this Agreement and all attachments hereto, the terms "Agreement" and "Contract" shall have the same meaning and shall be interchangeable.

6. COMPLIANCE WITH APPLICABLE LAW, CHOICE OF LAW

6.1 This Agreement shall be governed exclusively by the provisions hereof and by the laws of the State of New Mexico and applicable ordinances of Santa Fe County.

6.2 In performing its obligations hereunder, the Contractor shall comply with all applicable laws, ordinances, and regulations, including Santa Fe County Ordinance 2014-1 (Establishing a Living Wage).

6.3 Minimum Wage Rates. The Contractor, all subcontractors and sub-subcontractors warrants and agree to will comply with all applicable provisions of the New Mexico Public Works Minimum Wage Act as outlined in the Bid Documents. Wage rates are not applicable to projects costing less than $60,000.

6.4 This Agreement shall be construed in accordance with the substantive laws of the State of New Mexico, without regard to its choice of law rules. Contractor and the County agree that the exclusive forum for any litigation between them arising out of or related to this Agreement shall be federal and state district courts of New Mexico.

6.5 Pursuant to 13-1-191, NMSA 1978, reference is hereby made to the criminal laws of New Mexico, including §30-14-1, §30-24-2, and §30-41-1 through 3 NMSA 1978, which prohibit bribes, kickbacks, and gratuities, violation of which constitutes a felony. Further, the Procurement Code, 13-1-28 through 13-1-199 NMSA 1978, imposes civil and criminal penalties for its violation.

6.6 New Mexico Tort Claims Act. By entering into this Agreement, neither party shall be responsible for liability incurred as a result of the other party's acts or omissions in connection with this Agreement. Any liability incurred in connection with this Agreement is subject to the immunities and limitations of the New Mexico Tort Claims Act, Sections 41-4-1, et Seq. NMSA 1978, as amended. The County and its "public employees" as defined in the New Mexico Tort Claims Act, do not waive sovereign immunity, do not

waive any defense and do not waive any limitation of liability pursuant to law. No provision in this Agreement modifies or waives any provision of the New Mexico Tort Claims Act.

6.7 Provision Required by Law Deemed Inserted. Each and every provision of law and clause required by law to be inserted in this contract shall be deemed to be inserted herein and the contract shall be read and enforced as though it were included herein, and if through mistake or otherwise any such provision is not inserted, or is not correctly inserted, then upon the application of either party the contract shall forthwith be physically amended to make such insertion or correction.

7. EFFECTIVE DATE AND TERM

7.1 This Agreement shall, upon due execution by all parties, become effective in accordance with the Agreement Between County and Contractor for Construction, Article 3 - Effective Date, Time of Commencement and Substantial Completion. This Agreement shall not become effective until: (1) approved by the Santa Fe County Commissioners and/or the County Manager or their designee; and (2) signed by all parties required to sign this Agreement.

7.2 This Contract shall achieve Substantial Completion in accordance with the Agreement Between County and Contractor, Article 3 - Effective Date, Time of Commencement and Substantial Completion, unless earlier terminated pursuant to Section 8 (Termination) or 9, (Appropriations and Authorizations) of these General Conditions.

8. TERMINATION

8.1 Termination of Agreement for Cause. Either party may terminate the Agreement based upon any material breach of this Agreement by the other party. The non-breaching party shall give the breaching party written notice of termination specifying the grounds for the termination. The termination shall be effective 30 days from the breaching party's receipt of the notice of termination, during which time the breaching party shall have the right to cure the breach. If, however, the breach cannot with due diligence be cured within 30 days, the breaching party shall have a reasonable time to cure the breach, provided that, within 30 days of its receipt of the written notice of termination, the breaching party began to cure the breach and advised the non-breaching party in writing that it intended to cure.

8.2 Termination for Convenience of the County. The County may, in its discretion, terminate this Agreement at any time for any reason by giving the Contractor written notice of termination. The notice shall specify the effective date of termination, which shall not be less than 15 days from the Contractor's receipt of the notice. The County shall pay the Contractor for acceptable work, determined in accordance with the specifications and standards set forth in this Agreement, performed before the effective date of termination but shall not be liable for any work performed after the effective date of termination.

8.3 Right of the County to Terminate Contract In the event that any of the provisions of this

contract are violated by the Contractor, or by any of its subcontractors, the County may serve written notice upon the Contractor and the Surety of its intention to terminate the contract, such notices to contain the reasons for such intention to terminate the contract, and unless within ten days after the serving of such notice upon the Contractor, such violation or delay shall cease and satisfactory arrangement of correction be made, the contract shall, upon the expiration of said ten days, cease and terminate. In the event of any such termination, the County shall immediately serve notice thereof upon the Surety and the Contractor and the Surety shall have the right to take over and perform the contract. Provided, however, that if the Surety does not commence performance thereof within ten days from the date of the mailing to such Surety of notice of termination, the County may take over the work and prosecute the same to completion by contract or by force account and at the expense of the Contractor and the Contractor and its Surety shall be liable to the County for any excess cost occasioned the County thereby, and in such event the County may take possession of and utilize in completing the work, such materials, appliances, and plant as may be on the site of the work and necessary therefore.

9. APPROPRIATIONS AND AUTHORIZATIONS

This Agreement is contingent upon sufficient appropriations and authorizations being made for performance of this Agreement by the Santa Fe County Board of County Commissioners and/or, if state funds are involved, the New Mexico State Legislature. If sufficient appropriations and authorizations are not made in this or future fiscal years, this Agreement shall terminate upon written notice by the County to the Contractor. Such termination shall be without penalty to the County, and the County shall have no duty to reimburse the Contractor for expenditures made in the performance of this Agreement. The County is expressly not committed to expenditure of any funds until such time as they are programmed, budgeted, encumbered and approved for expenditure by the County. The County's decision as to whether sufficient appropriations and authorizations have been made for the fulfillment of this Agreement shall be final and not subject to challenge by the Contractor in any way or forum, including a lawsuit.

10. AMENDMENTS – CHANGE ORDERS

Contract Documents may be amended by a Change Order, hereto attached as Exhibit I to allow for additions, deletions, and revision as specified in Article 2 "The Work" of the Agreement between Santa Fe County and the Contractor or to amend the terms and conditions by a Change Order.

11. INDEMNIFICATION

11.1 The Contractor shall defend, indemnify, and hold harmless the County and its elected officials, agents, and employees from any losses, liabilities, damages, demands, suits, causes of action, judgments, costs or expenses (including but not limited to court costs and attorneys' fees) resulting from or directly or indirectly arising out of the Contractor's performance or non-performance of its obligations under this Agreement, including but not limited to the Contractor's breach of any representation or warranty made herein.

11.2 The Contractor agrees that the County shall have the right to control and participate in the defense of any such demand, suit, or cause of action concerning matters that relate to the County and that such suit will not be settled without the County's consent, such consent can not to be unreasonably withheld. If a conflict exists between the interests of the County and the Contractor in such demand, suit, or cause of action, the County may retain its own counsel to represent the County's interest.

11.3 The Contractor's obligations under this section shall not be limited by the provisions of any insurance policy the Contractor is required to maintain under this Agreement.

12. AGGRIEVEMENT PROCEDURE DURING CONTRACT ADMINISTRATION

12.1 Any claims, disputes, or other matters in question between the Contractor and the County, except those which have been waived by the making or acceptance of final payment as provided in Paragraph 6.2 of the Agreement Between Santa Fe County and Contractor for Construction, shall be presented in the form of a written request accompanied by supporting data to the Architect/Engineer for formal decision, with a copy to the other party. Such formal decision of the Architect/Engineer is binding upon the Contractor and the Owner unless either or both notify each other and the Architect/Engineer in writing within 15 days of their receipt of the decision that they are unwilling to abide by the Architect's/Engineer's decision, are thereby aggrieved in connection with the decision, and are separately exercising such rights as either may have under the Contract Documents or by law and regulation. If the Architect/Engineer fails to provide a written decision or a reasonable schedule to issue a written decision within ten days after the County or the Contractor has presented its request, that party may consider itself aggrieved and may proceed to exercise its rights.

12.2 A settlement agreement signed by the County and the Contractor shall supersede and cancel any other dispute resolution proceedings regarding the same matter.

12.3 Unless work is stopped or payment withheld in accordance with the conditions of the Contract, or unless otherwise agreed in writing, the Contractor shall carry on the Work and maintain its progress during any dispute resolution proceedings, and the Owner shall continue to make payments to the Contractor in accordance with the Contract Documents.

13. DISPUTE RESOLUTION

13.1 Either County or Contractor may request mediation pursuant to the New Mexico Public Works Mediation Act, 13-4C-1 NMSA 1978, of any claim before such decision become final and binding. The request for mediation shall be submitted in writing to the other party. Timely submission of the request shall stay the effect of Paragraph 12.1.

13.2 County and Contractor shall participate in the mediation process in good faith. The process shall be completed within 60 days of filing of the request. The mediation shall be governed by the rules for mediation pursuant to the New Mexico Public Works Mediation Act.

13.3 If the dispute is not resolved by mediation, the dispute shall be resolved through litigation in the district court. The parties agree that the exclusive forum for such litigation shall be the State of New Mexico District Court for the First Judicial District at Santa Fe, New Mexico. Contractor irrevocably consents to the jurisdiction of said Court and agrees to accept service of a summons and complaint by mail or commercial courier service in accordance with Rule 1-004(E) (3) NMRA.

14. INSURANCE

14.1 The Contractor shall not commence work under this contract until they have obtained all the insurance required under this paragraph and such insurance has been approved by the County, nor shall the Contractor allow any subcontractor to commence work on its subcontract until the insurance required of the subcontractor has been so obtained and approved.

14.2 Proof of Carriage of Insurance. The Contractor shall furnish the County with certificates showing the type, amount, class of operations covered, effective dates and date of expiration of policies. Such certificates shall also contain substantially the following statement: "Should any of the above described policies be cancelled before the expiration date thereof, notice will be delivered in accordance with the policy provisions".

14.3 General Conditions. The Contractor shall submit evidence of insurance as is required herein. Policies of insurance shall be written by companies authorized to write such insurance in New Mexico.

14.4 General Liability Insurance, Including Automobile. The Contractor shall procure and maintain during the life of this Agreement a comprehensive general liability and automobile insurance policy with liability limits in amounts not less than $1,000,000.00 combined single limits of liability for bodily injury, including death, and property damage for any one occurrence. Said policies of insurance shall include coverage for all operations performed for the County by the Contractor; coverage for the use of all owned, non-owned, hired automobiles, vehicles and other equipment, both on and off work; and contractual liability coverage under which this Agreement is an insured contract. The Santa Fe County shall be a named additional insured on the policy.

14.5 Subcontractor's Public Liability and Property Damage Insurance and Vehicle Liability Insurance. The Contractor shall require each of its subcontractors to procure and to maintain during the life of its subcontract, Subcontractor's Public Liability and Property Damage Insurance and Vehicle Liability Insurance of the type and in the amounts specified in 14.4 above.

14.6 Workers' Compensation Insurance. The Contractor shall comply with the provisions of the Workers' Compensation Act, 52-1-1 to 52-1-70 NMSA 1978. The Contractor shall procure and shall maintain during the life of this contract Workmen's Compensation Insurance as required by applicable State law for all of its employees to be engaged in work at the site of the project under this Contract and, in case of any such work sublet, the Contractor shall

require the subcontractor similarly to provide Workmen's Compensation Insurance for all of the latter's employees to be engaged in such work unless such employees are covered by the protection afforded by the Contractor's Workmen's Compensation Insurance. In case any class of employees engaged in hazardous work on the project under this contract is not protected under the Workmen's Compensation law, the Contractor shall provide and shall cause each subcontractor to provide adequate employer's liability insurance for the protection of such of its employees as are not otherwise protected.

14.7 Scope of Insurance and Special Hazards. The insurance require under subparagraphs 14.4 and 14.5 hereof shall provide adequate protection for the Contractor and his subcontractors, respectively, against damage claims which may arise from operations under this Contract, whether such operations be by the insured or by anyone directly or indirectly employed by him and, also against any of the special hazards which may be encountered in the performance of this Contract.

14.8 Builder's Risk Insurance (Fire and Extended Coverage). Until the project is completed and accepted by the County, the County, or Contractor at the County's option is required to maintain Builder's Risk Insurance (fire and extended coverage) on a 100 percent completed value basis on the insurable portion of the project for the benefit of the County, the Contractor, subcontractors as their interests may appear. The Contractor shall not include any costs for Builder's Risk Insurance (fire and extended coverage) premiums during construction unless the Contractor is required to provide such insurance; however, this provision shall not release the Contractor from its obligation to complete, according to plans and specifications, the project covered by the contract, and the Contractor and his Surety shall be obligated to full performance of the Contractor's undertaking.

14.9 Increased Limits. If, during the life of this Agreement, the New Mexico State Legislature increases the maximum limits of liability under the Tort Claims Act (NMSA 1978, Sections 41-4-1 through 41-4-29, as amended), the Contractor shall increase the maximum limits of any insurance required herein.

14.10 Additional insured. Santa Fe County will be listed as an additional insured on all policies, and proof of coverage must be provided before work begins. Contractor shall maintain adequate insurance in at least the maximum amounts which the County could be liable under the New Mexico Tort Claims Act. It is the sole responsibility of the Contractor to be in compliance with the law.

15. INDEPENDENT CONTRACTOR

15.1 The Contractor and the Contractor’s agents and employees are independent contractors performing professional and technical services for the County and are not employees of the County. The Contractor and the Contractor’s agents and employees shall not accrue leave, retirement, insurance, bonding, use of County’s vehicles, or any other benefits afforded to employees of the County as a result of this Agreement.

15.2 The Contractor shall not subcontract any portion of the services to be performed under this

Agreement without prior written approval of the County.

15.3 The Contractor shall maintain detailed time records which indicate the date, time and nature of services rendered. These records shall be subject to inspection by the County and the State Auditor. The County shall have the right to audit billings both before and after payment. Payment under this Agreement shall not foreclose the right of the County to recover excessive illegal payments.

16. CONFLICT OF INTEREST OF OFFICERS OR EMPLOYEES OF THE LOCAL JURISDICTION, MEMBERS OF THE LOCAL GOVERNING BODY, OR OTHER PUBLIC OFFICIALS

16.1 No officer or employee of the local jurisdiction or its designees or agents, no member of the governing body, and no other public official of the locality who exercises any function or responsibility with respect to this contract, during its tenure or for one year thereafter, shall have any interest, direct or indirect, in any contract or subcontract, or the proceeds thereof, for work to be performed. Further, the Contractor shall cause to be incorporated in all subcontracts the language set forth in this paragraph prohibiting conflict of interest.

16.2 No official of the County who is authorized in such capacity and on behalf of the County to negotiate, make, accept or approve, or to take part in negotiating, making accepting or approving any architectural, engineering, inspection, construction or material supply contract or any subcontract in connection with the construction of the project, shall become directly or indirectly interested personally in this contract or in any part hereof. No officer, employee, architect, attorney, engineer or inspector of or for the County who is authorized in such capacity and on behalf of the County to exercise any legislative, executive, supervisory or other similar functions in connection with the construction of the project, shall become directly or indirectly interested personally in this contract or in any part thereof, any material supply contract, subcontract, insurance contract, or any other contract pertaining to the project.

16.3 The Contractor warrants that the Contractor presently has no interest and shall not acquire any interest, direct or indirect, which would conflict in any manner or degree with the performance or services required under this Agreement.

17. ASSIGNMENT

17.1 The Contractor shall not assign or transfer any interest in this Agreement or assign any claims for money due or to become due under this Agreement without the advance written approval of the County. Any attempted assignment or transfer without the County's advance written approval shall be null and void and without any legal effect.

18. SUBCONTRACTING

18.1 The Contractor shall not subcontract or delegate any portion of the services to be performed under this Agreement without the advance written approval of the County. Any attempted subcontracting or delegating without the County's advance written approval

shall be null and void and without any legal effect.

18.2 Contractor shall provide to the County a listing of subcontractors within ten (10) days of the Contract award.

18.3 Contractor shall adhere to all provisions of the Subcontractor's Fair Practices Act 13-4-31 to 13-4-42, NMSA 1978.

18.4 Contractor shall provide to the County completed Non-Collusion Affidavit of Subcontractor form and Certification of Subcontractor Regarding Equal Employment Opportunity form for all subcontractors listed.

18.5 The Contractor shall not award any work to any subcontractor without prior written approval of the County, which approval will not be given until the Contractor submits to the County a written statement concerning the proposed award to the subcontractor, which statement shall contain such information as the County may require.

18.6 The Contractor shall be as fully responsible to the County for the acts and omissions of its subcontractors, and of persons either directly or indirectly employed by them, as they are for the acts and omissions of persons directly employed by them.

18.7 The Contractor shall cause appropriate provisions to be inserted in all subcontracts relative to the work to bind subcontractors to the Contractor by the terms of the General Conditions and other contract documents insofar as applicable to the work of subcontractors and to give the Contractor the same power as regards terminating any subcontract that the County may exercise over the Contractor under any provision of the contract documents.

18.8 Nothing contained in this contract shall create any contractual relation between any subcontractor and the County.

18.9 All Work performed for Contractor by a Subcontractor or Supplier will be pursuant to an appropriate written agreement between Contractor and the Subcontractor or Supplier which specifically binds the Subcontractor or Supplier to the applicable terms and conditions of the Contract Documents for the benefit of County. Any contract between Contractor and a Subcontractor or Supplier shall provide that any remedy or claim for nonpayment of sums due or owing to Subcontractor or Supplier or services performed or materials provided is against Contractor and not County, subject to any remedy or rights Subcontractor or Supplier may have under the terms of the Contractor's Performance Bond and Section 13-4-19 NMSA 1978, the New Mexico Little Miller Act.

19. PERSONNEL

19.1 All work performed under this Agreement shall be performed by the Contractor or under its supervision.

19.2 The Contractor represents that it has, or will secure at its own expense, all personnel required to discharge its obligations under this Agreement. Such personnel (i) shall not be

employees of or have any contractual relationships with the County and (ii) shall be fully qualified and licensed or otherwise authorized or permitted under federal, state, and local law to perform such work.

20. NOTICES

20.1 Any notice required to be given to either party by this Agreement shall be in writing and shall be delivered in person, by courier service or by U.S. mail, either first class or certified, return receipt requested, postage prepaid, as follows:

To the County: Santa Fe County
Office of the County Attorney
102 Grant Avenue
Santa Fe, New Mexico 87501

To the Contractor: _____
_____
_____

20.2 Nothing herein contained shall preclude the giving of any such written notice by personal service. The address to which notices shall be mailed to either party may be changed by written notice given by such party to the other as hereinabove provided.

21. RELEASE

The Contractor, upon final payment of the amounts due under this Agreement, releases the County, the County's officers and employees from all liabilities and obligations arising from or under this Agreement, including, without limitation, all damages, losses, costs, liability, and expenses, including, without limitation, attorney's fees and costs of litigation that the Contractor may have.

22. WAIVER

No provision of this Agreement shall be deemed to have been waived by either party unless such waiver be in writing signed by the party making the waiver and addressed to the other party; nor shall any custom or practice which may evolve between the parties in the administration of the terms hereof be construed to waive or lessen the right of either party to insist upon performance by the other party in strict accordance with the terms hereof. Further, the waiver by any party of a breach by the other party of any term, covenant, or condition hereof shall not operate as a waiver of any subsequent breach of the same or any other term, covenant, or condition thereof.

CONDITIONS OF THE WORK

1. ADDITIONAL INSTRUCTIONS AND DETAIL DRAWINGS

1.1 The Contractor will be furnished additional instructions and detail drawings as necessary to carry out the work included in the Contract. The additional drawings and instructions supplied to the Contractor will coordinate with the Contract Documents and will be so prepared that they can be reasonably interpreted as part thereof. The Contractor shall carry out the work in accordance with the additional detail drawings and instructions. The Contractor and the Architect/Engineer/County will prepare jointly (a) a schedule, fixing the dates at which special detail drawings will be required, such drawings, if any, to be furnished by the Architect/ Engineer/County in accordance with the schedule, and (b) a schedule fixing the respective dates for the submission of shop drawings, the beginning of manufacture, testing and installation of materials, supplies and equipment, and the completion of the various parts of the work; each schedule to be subject to change from time to time in accordance with progress of the work.

2. SHOP OR SETTING DRAWINGS

2.1 The Contractor shall submit promptly to the Architect/Engineer/County two (2) copies of each shop or setting drawing prepared in accordance with the schedule predetermined as aforesaid. After examination of such drawings by the Architect/Engineer/County and the return thereof, the Contractor shall make such corrections to the drawings as have been indicated and shall furnish the Architect/ Engineer/County with two corrected copies. If requested by the Architect/Engineer/County the Contractor must furnish additional copies. Regardless of corrections made in or approval given to such drawings by the Architect/Engineer/County, the Contractor will be responsible for the accuracy of such drawings and for their conformity to the Plans and Specifications, unless the Contractor notifies the Architect/Engineer/County in writing of any deviations at the time the Contractor furnishes such drawings.

3. MATERIALS, SERVICES AND FACILITIES

3.1 It is understood that except as otherwise specifically stated in the Contract Documents, the Contractor shall provide and pay for all materials, labor, tools, equipment, water, light, power, transportation, superintendence, temporary construction of every nature, and all other services and facilities of every nature whatsoever necessary to execute, complete, and deliver the work within the specified time.

3.2 Any work necessary to be performed after regular working hours, on Sundays or legal holidays, shall be performed without additional expense to the County.

4. CONTRACTOR'S TITLE TO MATERIALS

4.1 No materials or supplies for the work shall be purchased by the Contractor or by any subcontractor subject to any chattel mortgage or under a conditional sale contract or other

agreement by which an interest is retained by the seller. The Contractor warrants that he/she has good title to all materials and supplies used by him/her in the work, free from all liens, claims or encumbrances.

5. INSPECTION AND TESTING OF MATERIALS

5.1 All materials and equipment used in the construction of the project shall be subject to adequate inspection and testing in accordance with accepted standards. The laboratory or inspection agency shall be selected by the County. The County will pay for all laboratory inspection service direct, and not as a part of the Contract.

5.2 Materials of construction, particularly those upon which the strength and durability of the structure may depend, shall be subject to inspection and testing to establish conformance with specifications and suitability for uses intended.

6. "OR EQUAL" CLAUSE

6.1 Whenever a material, article or piece of equipment is identified on the plans or in the specifications by reference to manufacturers' or vendors' names, trade names, catalogue numbers, etc., it is intended merely to establish a standard; and, any material, article, or equipment or other manufacturers and vendors which will perform adequately the duties imposed by the general design will be considered equally acceptable provided the material, article, or equipment so proposed, is, in the opinion of the Architect/Engineer/County, of equal substance and function. It shall not be purchased or installed by the Contractor without the Architect/Engineer/County's written approval.

7. PATENTS

7.1 The Contractor shall hold and save the County and its officers, agents, servants, and employees harmless from liability of any nature or kind, including cost and expenses for, or on account of, any patented or unpatented invention, process, article, or appliance manufactured or used in the performance of the Contract, including its use by the County, unless otherwise specifically stipulated in the Contract Documents.

7.2 License and/or Royalty Fees for the use of a process which is authorized by the County of the project must be reasonable, and paid to the holder of the patent, or its authorized licensee, direct by the County and not by or through the Contractor.

7.3 If the Contractor uses any design, device or materials covered by letters, patent or copyright, the Contractor shall provide for such use by suitable agreement with the County of such patented or copyrighted design, device or material. It is mutually agreed and understood, that, without exception, the Contract prices shall include all royalties or costs arising from the use of such design, device or materials, in any way involved in the work. The Contractor and/or its Sureties shall indemnify and save harmless the County of the project from any and all claims for infringement by reason of the use of such patented or copyrighted design, device or materials, or any trademark or copyright in connection with

work agreed to be performed under this Contract, and shall indemnify the County for any cost, expense or damage which it may be obliged to pay by reason of such infringement at any time during the prosecution of the work or after, completion of the work.

8. SURVEYS, PERMITS AND REGULATIONS

8.1 Unless otherwise expressly provided for in the Specifications, the County will furnish to the Contractor all surveys necessary for the execution of the work.

8.2 Unless otherwise expressly provided for in the Specifications, the Contractor shall procure and pay all permits, licenses and approvals necessary for the execution of this Contract.

8.3 The Contractor shall comply with all laws, ordinances, rules, orders, and regulations relating to performance of the work, the protection of adjacent property, and the maintenance of passageways, guard fences or other protective facilities.

9. CONTRACTOR'S OBLIGATIONS

9.1 The Contractor shall and will, in good workmanlike manner, do and perform all work and furnish all supplies and materials, machinery, equipment, facilities and means, except as herein otherwise expressly specified, necessary or proper to perform and complete all the work required by this Contract, within the time herein specified. The Contractor will perform the Work in accordance with the provisions of this Contract and said specifications and in accordance with the plans and drawings covered by this Contract any and all supplemental plans and drawings, and in accordance with the directions of the Architect/Engineer/County as given from time to time during the progress of the work. The Contractor shall furnish, erect, maintain, and remove such construction plans and such temporary works as may be required.

9.2 The Contractor shall observe, comply with, and be subject to all terms, conditions, requirements, and limitations of the Contract and specifications, and shall do, carry on, and complete the entire work to the satisfaction of the Architect/Engineer and the County.

10. WEATHER CONDITIONS

10.1 In the event of temporary suspension of work, or during inclement weather, or whenever the Architect/Engineer/County shall direct, the Contractor will, and will cause its subcontractors to protect carefully its and their work and materials against damage or injury from the weather. If, in the opinion of the Architect/Engineer/County, any work or materials shall have been damaged or injured by reason of failure on the part of the Contractor or any of its Subcontractors so to protect its work, such materials shall be removed and replaced at the expense of the Contractor.

11. PROTECTION OF WORK AND PROPERTY-EMERGENCY

11.1 The Contractor shall at all times safely guard the County's property from injury or loss in

connection with this Contract. The Contractor shall at all times safely guard and protect its own work, and that of adjacent property from damage. The Contractor shall replace or make good any such damage, loss or injury unless such is caused directly by errors contained in the Contract or by the County, or its duly authorized representatives.

11.2 In case of an emergency which threatens loss or injury of property, and/or safety of life, the Contractor will be allowed to act, without previous instructions from the Architect/Engineer/County, in a diligent manner. The Contractor shall notify the Architect/Engineer/County immediately thereafter. Any claim for compensation by the Contractor due to such extra work shall be promptly submitted to the Architect/Engineer/County for approval.

11.3 Where the Contractor has not taken action but has notified the Architect/Engineer/County of an emergency threatening injury to persons or to damage to the work or any adjoining property, the Contractor shall act as instructed or authorized by the Architect/Engineer/County.

11.4 The amount of reimbursement claimed by the Contractor on account of any emergency action shall be determined in the manner provided in Paragraph 15 of these Conditions of the Work.

12. INSPECTION

12.1 The authorized representatives and agents of the County shall be permitted to inspect all work, materials, payrolls, records of personnel, invoices of materials, and other relevant data and records.

13. REPORTS, RECORDS AND DATA

13.1 The Contractor shall submit to the County such schedule of quantities and costs, progress schedules, payrolls, reports, estimates, records and other data as the County may request concerning work performed or to be performed under this Contract.

14. SUPERINTENDENT BY CONTRACTOR

14.1 At the site of the work the Contractor shall employ a construction superintendent or foreman who shall have full authority to act for the Contractor. It is understood that such representative shall be acceptable to the Architect/ Engineer/County and shall be one who can be continued in that capacity for the particular job involved unless he/she ceases to be on the Contractor's payroll.

15. CHANGES IN WORK

15.1 No changes in the work covered by the approved Contract Documents shall be made without having prior written approval of the County. Charges or credits for the work covered by the approved change shall be determined by one or more, or a combination of

the following methods:

A. Unit bid prices previously approved.
B. An agreed lump sum.
C. The actual cost of:
    1) Labor, including foremen;
    2) Materials entering permanently into the work;
    3) The County's or rental cost of construction equipment during the time of use on the extra work;
    4) Power and consumable supplies for the operation of power equipment;
    5) Insurance;
    6) Social Security and old age and unemployment contributions.
D. To the costs for changes in work a fixed fee will be added to be agreed upon but not to exceed ten percent (10%) of the actual cost of the work. The fee shall be compensation to cover the cost of supervision, overhead, bond, profit and any other general expenses.

16. EXTRAS

16.1 Without invalidating the contract, the County may order extra work or make changes by altering, adding to or deducting from the work, the contract sum being adjusted accordingly, and the consent of the Surety being first obtained where necessary or desirable. All the work of the kind bid upon shall be paid for at the price stipulated in the proposal, and no claims for any extra work or materials shall be allowed unless the work is ordered in writing by the County or the Architect/Engineer, acting officially for the County, and the price is stated in such order.

17. INSPECTION OF SERVICES

17.1 The Contractor shall provide and maintain an inspection system acceptable to the County covering the services under this Contract. Complete records of all inspection work performed by the Contractor shall be maintained and made available to the County during contract performance and for as long afterwards as the Contract requires.

17.2 The County has the right to inspect and test all services called for by the Contract, to the extent practicable at all times and places during the term of the Contract. The County shall perform inspections and tests in a manner that will not unduly delay the work.

17.3 If the County performs inspections or tests on the premises of the Contractor or a subcontractor, the Contractor shall furnish, and shall require subcontractors to furnish, at no increase in contract price, all reasonable facilities and assistance for the safe and convenient performance of these duties.

17.4 If any of the services do not conform with the Contract requirements, the County may require the Contractor to perform the services again in conformity with Contract requirements, at no increase in contract amount. When the defects in services cannot be corrected by re-performance, the County may require the Contractor to take necessary

action to ensure that future performance conforms to contract requirements; and reduce the Contract sum to reflect the reduced value of the services performed.

17.5 If the Contractor fails to promptly perform the services again or to take the necessary action to ensure future performance in conformity with Contract requirements, the County may by contract or otherwise, perform the services and charge to the Contractor any cost incurred by the County that is directly related to the performance of such service, or terminate the Contract for default.

18. CORRECTION OF WORK

18.1 All work, all materials, whether incorporated in the work or not, all processes of manufacture, and all methods of construction shall be at all times and places subject to the inspection of the Architect/ Engineer/County who shall be the final judge of the quality and suitability of the work, materials, processes of manufacture, and methods of construction for the purposes for which they are used. Should they fail to meet their approval they shall be forthwith reconstructed, made good, replaced and/or corrected, as the case may be, by the Contractor at its own expense. Rejected material shall immediately be removed from the site. If, in the opinion of the Architect/Engineer/County, it is undesirable to replace any defective or damaged materials or to reconstruct or correct any portion of the work injured or not performed in accordance with the Contract Documents, the compensation to be paid to the Contractor hereunder shall be reduced by such amount as in the judgment of the Architect/Engineer/County shall be equitable.

19. WARRANTY OF CONSTRUCTION

19.1 In addition to any other warranties in this Contract, the Contractor warrants that work performed under this Contract conforms to the Contract requirements and is free of any defect in equipment, material, or design furnished, or workmanship performed by the Contractor or any subcontractor or supplier at any tier.

19.2 This warranty shall continue for a period of one (1) year from the date of final acceptance of the work. If the County takes possession of any part of the work before final acceptance, this warranty shall continue for a period of one (1) year from the date the County takes possession.

19.3 The Contractor shall remedy at the Contractor's expense any failure to conform, or any defect. In addition, the Contractor shall remedy at the Contractor's expense any damage to County-owned or controlled real or personal property, when that damage is the result of the Contractor's failure to conform to contract requirements or any defect of equipment, material, workmanship, or design furnished.

19.4 The Contractor shall restore any work damaged in fulfilling the terms and conditions of this clause. The Contractor's warranty with respect to work repaired or replaced will run for one (1) year from the date of repair or replacement.

19.5 The County shall notify the Contractor, in writing, within a reasonable time after the discovery of any failure, defect, or damage.

19.6 If the Contractor fails to remedy any failure, defect, or damage within a reasonable time after receipt of notice, the County shall have the right to replace, repair, or otherwise remedy the failure, defect, or damage at the Contractor's expense.

19.7 With respect to all warranties, express or implied, from subcontractors, manufacturers, or suppliers for work performed and materials furnished under this Contract, the Contractor shall obtain all warranties that would be given in normal commercial practice; require all warranties to be executed, in writing, for the benefit of the County, if directed by the County; and, enforce all warranties for the benefit of the County, if directed by the County.

19.8 In the event the Contractor's warranty under subparagraph 19.4 of this clause has expired, the County may bring suit at its expense to enforce a subcontractor's, manufacturer's, or supplier's warranty.

19.9 Unless a defect is caused by the negligence of the Contractor or subcontractor or supplier at any tier, the Contractor shall not be liable for the repair of any defects of material or design furnished by the County nor for the repair of any damage that results from any defect in County-furnished material or design.

19.10 This warranty shall not limit the County's rights under the Inspection and Acceptance clause of this Contract with respect to latent defects, gross mistakes, or fraud.

20. SUBSURFACE CONDITIONS FOUND DIFFERENT

20.1 Should the Contractor encounter sub-surface and/or latent conditions at the site materially differing from those shown on the Plans or indicated in the Specifications, the Contractor shall immediately give notice to the Architect/Engineer/County of such conditions before they are disturbed. The Architect/Engineer/County will thereupon promptly investigate the conditions, and if they find that they materially differ from those shown on the Plans or indicated in the Specifications, they will at once make such changes in the Plans and/or Specifications as they may find necessary, any increase or decrease of cost resulting from such changes to be adjusted in the manner provided in Paragraph 15 above.

21. CLAIMS FOR EXTRA COST

21.1 No claim for extra work or cost shall be allowed unless the same was done in pursuance of a written order of the Architect/Engineer approved by the County, as aforesaid, and the claim presented with the first estimate after the changed or extra work is done. When work is performed under the terms of General Conditions, the Contractor shall furnish satisfactory bills, payrolls and vouchers covering all items of cost and when requested by the County, giving the County access to accounts relating thereto.

22. CONSTRUCTION SCHEDULE AND PERIODIC ESTIMATES

22.1 Immediately after execution and delivery of the Contract, and before the first partial payment is made, the Contractor shall deliver to the County an estimated construction progress schedule in a form satisfactory to the County, showing the proposed dates of commencement and completion of each of the various subdivisions of work required under the Contract Documents and the anticipated amount of each monthly payment that will become due to the Contractor in accordance with the progress schedule. The Contractor shall also furnish on forms to be supplied by the County (a) a detailed estimate giving a complete breakdown of the Contract sum and (b) periodic itemized estimates of work done for the purpose of making partial payments thereof. The costs employed in making up any of these schedules will be used only for determining the basis of partial payments and will not be considered as fixing a basis for additions to or deductions from the Contract price.

22.2 Schedule

The Contractor shall, within five (5) days after the effective date of Notice to Proceed, prepare and submit five (5) copies of a progress schedule covering project operations for the Contract period. This progress schedule shall be of the type generally referred to as a Critical Path Method (CPM), Critical Path Schedule (CPS), and Critical Path Analysis (CPA), and other similar designations. The CPM shall be used to control the timing and sequences of the project. All work shall be done in accordance with the CPM Planning and Scheduling. A written statement of explanation shall be submitted with the progress schedule. All costs incurred by the contractor to implement the CPM shall be borne by the Contractor.

23. ASSIGNMENTS

23.1 The Contractor shall not assign the whole or any part of this Contract or any monies due or to become due hereunder without written consent of the County. In case the Contractor assigns all or any part of any monies due or to become due under this Contract, the instrument of assignment shall contain a clause substantially to the effect that it is agreed that the right of the assignee in and to any monies due or to become due to the Contractor shall be subject to prior claims of all persons, firms and corporations of services rendered or materials supplied for the performance of the work called for in this Contract.

24. MUTUAL RESPONSIBILITY OF CONTRACTORS

24.1 If, through acts of neglect on the part of the Contractor, any other Contractor or any subcontractor shall suffer loss or damage on the work, the Contractor agrees to settle with such other Contractor or subcontractor by agreement or arbitration if such other Contractor or subcontractors will so settle. If such other Contractor or subcontractor shall assert any claim against the County on account of any damage alleged to have been sustained, the County shall notify the Contractor, who shall indemnify and save harmless the County against any such claim.

25. SEPARATE CONTRACT

25.1 The Contractor shall coordinate its operations with those of other contractors. Cooperation will be required in the arrangement for the storage of materials and in the detailed execution of the work. The Contractor, including its subcontractors, shall keep informed of the progress and the detail work of other contractors and shall notify the Architect/ Engineer/County immediately of lack of progress or defective workmanship on the part of other contractors. Failure of a contractor to keep informed of the work progressing on the site and failure to give notice of lack of progress or defective workmanship by others shall be construed as acceptance by the Contractor of the status of the work as being satisfactory for proper coordination with its own work.

26. ARCHITECT/ENGINEER'S AUTHORITY

26.1 The Architect/Engineer/County shall give all orders and directions contemplated under this Contract and specifications, relative to the execution of the work. The Architect/Engineer/County shall determine the amount, quality, acceptability, and fitness of the several kinds of work and materials which are to be paid for under this Contract and shall decide all questions which may arise in relation to said work and the construction thereof. The Architect/Engineer/County's estimates and decisions shall be final and conclusive, except as herein otherwise expressly provided. In case any question shall arise between the parties hereto relative to said contract or specifications, the determination or decision of the Architect/Engineer/County shall be a condition precedent to the right of the Contractor to receive any money or payment for work under this Contract affected in any manner or to any extent by such question.

26.2 The Architect/Engineer/County shall decide the meaning and intent of any portion of the specifications and of any plans or drawings where the same may be found obscure or be in dispute. Any differences or conflicts in regard to their work which may arise between the Contractor under this Contract and other Contractors performing work for the County shall be adjusted and determined by the Architect/Engineer/County.

27. STATED ALLOWANCES

27.1 It is understood that Contractor has included in its proposal for the Contract sum all allowances including "Allowed Materials" The Contractor shall purchase the "Allowed Materials" as directed by the County on the basis of the lowest and best bid of at least three competitive bids. If the actual sum for purchasing the "Allowed Materials" is more or less than the "Cash Allowance," the Contract sum shall be adjusted accordingly. The adjustment in contract price shall be made on the basis of the purchase price without additional charges for overhead, profit, insurance or any other incidental expenses. The cost of installation of the "Allowed Materials" shall be included in the applicable sections of the Contract Specifications covering this work.

28. USE OF PREMISES AND REMOVAL OF DEBRIS

28.1 The Contractor expressly undertakes at its own expense:

A. to take every precaution against injuries to persons or damage to property;
B. to store its apparatus, materials, supplies and equipment in such orderly fashion at the site of the work as will not unduly interfere with the progress of its work or the work of any other subcontractors;
C. to place upon the work or any part thereof only such loads as are consistent with the safety of the portion of the work;
D. to clean up frequently all refuse, rubbish, scrap materials, and debris caused by its operations, to the end that at all times the site of the work shall present a neat, orderly and workmanlike appearance;
E. before final payment to remove all surplus material, false-work, temporary structures, including foundations thereof, plant of any description and debris of every nature resulting from its operations, and to put the site in a neat, orderly condition.
F. to effect all cutting, fitting or patching of its work required to make the same to conform to the plans and specifications and, except with the consent of the Architect/Engineer/County, not to cut or otherwise alter the work of any other Contractor.

29. QUANTITES OF ESTIMATE

29.1 Wherever the estimated quantities of work to be done and materials to be furnished under this Contract are shown in any of the documents including the proposal, they are given for use in comparing bids and the right is especially reserved except as herein otherwise specifically limited, to increase or diminish them as may be deemed reasonably necessary or desirable by the County to complete the work contemplated by this Contract, and such increase or diminution shall in no way void this Contract, nor shall any such increase or diminution give cause for claims or liability for damages.

30. LANDS AND RIGHTS-OF-WAY

30.1 Prior to the start of construction, the County shall obtain all lands and rights-of-way necessary for the carrying out and completions of work to be performed under this Contract.

31. GENERAL GUARANTY

31.1 Neither the final certificate of payment nor any provision in the Contract Documents, nor partial or entire occupancy of the premises by the County, shall constitute an acceptance of work not done in accordance with the Contract Documents or relieve the Contractor of liability in respect to any express warranties or responsibility for faulty materials or workmanship. The Contractor shall remedy any defects in the work and pay for any damage to other work resulting therefrom, which shall appear within a period of one (1) year from the date of final acceptance of the work unless a longer period is specified. The County will give notice of observed defects with reasonable promptness.

32. PROTECTION OF LIVES AND HEALTH

32.1 The Contractor shall exercise proper precaution at all times for the protection of persons and property and shall be responsible for all damages to persons or property, either on or off the site, which occur as a result of its prosecution of the work. The safety provisions of applicable laws and building and construction codes shall be observed and the Contractor shall take or cause to be taken, such additional safety and health measures as the County may determine to be reasonably necessary.

33. INTEREST OF MEMBER

33.1 No member of Santa Fe Board of County Commissioners shall be admitted to any share or part of this Contract or to any benefit that may arise therefrom.

34. OTHER PROHIBITED INTERESTS

34.1 No official of the County who is authorized in such capacity and on behalf of the County to negotiate, make, accept or approve, or to take part in negotiating, making accepting or approving any architectural, engineering, inspection, construction or material supply contract or any subcontract in connection with the construction of the project, shall become directly or indirectly interested personally in this Contract or in any part hereof. No officer, employee, architect, attorney, engineer or inspector of or for the County who is authorized in such capacity and on behalf of the County to exercise any legislative, executive, supervisory or other similar functions in connection with the construction of the project, shall become directly or indirectly interested personally in this Contract or in any part thereof, any material supply contract, subcontract, insurance contract, or any other contract pertaining to the project.

35. USE AND OCCUPANCY PRIOR TO ACCEPTANCE BY COUNTY

35.1 The Contractor agrees to the use and/or occupancy of a portion or unit of the project before formal acceptance by the County, provided the County:

A. Secures written consent of the Contractor except in the event, in the opinion of the Architect/ Engineer, the Contractor is chargeable with unwarranted delay in final cleanup of punch list items or other contract requirements.
B. Secures endorsement from the insurance carrier and consent of the surety permitting occupancy of the building or use of the project during the remaining period of construction.
C. When the project consists of more than one building, and one of the buildings is occupied, secures permanent fire and extended coverage insurance, including a permit to complete construction. Consent of the surety must also be obtained.

ATTACHMENT A

BID SHEETS

ATTACHMENT B

ADDENDA & MODIFICATIONS

EXHIBIT A

PROJECT MANUAL

EXHIBIT B

Construction Documents

EXHIBIT C

LABOR AND MATERIAL PAYMENT BOND

KNOW ALL MEN BY THESE PRESENT, THAT WE_____ _____as PRINCIPAL hereinafter called the "PRINCIPAL and _____as SURETY hereinafter called the "SURETY", are held and firmly bound unto Santa Fe County, a Political Subdivision of the State of New Mexico as OBLIGEE hereinafter called the "COUNTY", for the use and benefit of any claimants as herein below defined, in the amount of _____($.) dollars for the payment whereof PRINCIPAL and SURETY bind themselves, their heirs, executors, administrators, successors, and assigns, jointly and severally, firmly by these presents.

WHEREAS, the PRINCIPAL has a written contract dated _____, 2019, with the COUNTY for the construction services for the Property Control Facility, 424 NM599, in Santa Fe County, New Mexico, which must be constructed in accordance with drawings and specifications which contract is referenced and made a part hereof, and is hereinafter referred to as the "Contract."

NOW, THEREFORE, THE CONDITION OF THIS OBLIGATION is such that, if PRINCIPAL shall promptly make payment to all claimants as hereinafter defined, for all labor and material used or reasonably required for use in the performance of the Contract, then this obligation shall be void; otherwise, it shall remain in full force and effect, subject to the following conditions:

6. A claimant is defined as one having a direct contract with the PRINCIPAL or with a subcontractor of the PRINCIPAL for labor, material, or both, used or reasonably required for use in the performance of the Contract, labor and material being construed to include but not be limited to that part of water, gas, power, light, heat, oil, gasoline, telephone services or rental of equipment directly applicable to the Contract.

7. The above named PRINCIPAL and SURETY hereby jointly and severally agree with the COUNTY that every claimant as herein defined, who has not been paid in full before the expiration of a period of ninety (90) days after the date on which the last of such claimant's work or labor was done or performed, or materials were furnished by such claimant, prosecute a suit to final judgment for such sum or sums as may be justly due claimant, and have execution thereof. The COUNTY shall not be liable for payment of any cost or expenses of any such suit.

8. No suit or action shall be commenced hereunder by any claimant:

    c. Unless claimant, or other than one having a direct contract with the PRINCIPAL, shall have written notice in the form of an sworn statement to the COUNTY and any one or both of the following: the PRINCIPAL or SURETY above named, within ninety (90) days after such said claim is made or suit filed, stating with substantial accuracy the amount claimed and the name of the party to whom the materials were furnished, or for whom the work or labor was done or performed.

    d. Such notice shall be served by mailing the same by registered mail or certified mail, postage prepaid, in an envelope addressed to the COUNTY, PRINCIPAL or SURETY, at any place where an office is regularly maintained by said COUNTY, PRINCIPAL or SURETY for the transaction of business, or served in any manner in

which legal process may be served in the State in which the aforesaid project is located, save that such service need not be made by a public officer.

9. Any suit under this Labor and Material Bond must be instituted in accordance with the statute of limitation under Section 37-1-3 NMSA 1978.

10. No right of action shall accrue on this Bond to or for the use of any person or corporation other than subcontractors or sub-subcontractors of the said Contract between PRINCIPAL and Santa Fe County named herein.

SIGNED AND SEALED THIS_____DAY OF _____, 2019.

_____
CONTRACTOR – PRINCIPAL (signature)

By: _____
(Printed name and title)

_____ (seal)
NOTARY PUBLIC

My Commission expires: _____

_____
SURETY (signature)

_____
(Printed name and title)

_____ (seal)
NOTARY PUBLIC

My Commission expires: _____

_____
SURETY'S Authorized New Mexico Agent

EXHIBIT D

PERFORMANCE BOND

(SAMPLE)

A. KNOW ALL MEN BY THESE PRESENT, THAT WE _____ _____, as PRINCIPAL hereinafter called the "CONTRACTOR" and _____ _____, as SURETY hereinafter called the "SURETY", are held and firmly bound unto OBLIGEE Santa Fe County, a Political Subdivision of the State of New Mexico, hereinafter called the "COUNTY", in the sum of_____($_____) dollars for the payment whereof CONTRACTOR and SURETY bind themselves, their heirs, executors, administrators, successors and assigns, jointly and severally, firmly by these presents.

B. WHEREAS, the CONTRACTOR has a written contract dated _____, 2019, with the COUNTY for the construction services for the Property Control Facility, 424 NM599, Santa Fe County, New Mexico, in accordance with drawings and specifications which contract is referenced made part hereof, and is hereinafter referred to as the "Contract."

C. NOW, THEREFORE, THE CONDITION OF THIS OBLIGATION is such that, if CONTRACTOR shall promptly and faithfully perform said Contract (including any amendment thereto), then this obligation shall be null and void; otherwise it shall remain in full force and effect until the COUNTY shall by written instrument notify the SURETY that the obligation is discharged, except that the obligation shall continue for at least three (3) months following the expiration of the term of the Contract.

3. The SURETY hereby waives notice of any alteration or extension of the Contract time made by the COUNTY.

4. Whenever CONTRACTOR shall be, and is declared by the COUNTY to be in default under the Contract, the COUNTY having performed the COUNTY'S obligations thereunder, the SURETY must promptly remedy the default and shall promptly:

   (3) Complete the Contract in accordance with its terms and conditions, or

   (4) Obtain a bid or bids for submission to the COUNTY for completing the Contract in accordance with its terms and conditions, and upon determination by the COUNTY and SURETY of the lowest responsible bidder, arrange for a contract between such bidder and Santa Fe County, and make available as work progresses (even though there should be a default or a secession of defaults under the Contract or contracts of completion arranged under this paragraph) sufficient funds to pay the cost of completion less the balance of the Contract price, but not exceeding, including other costs and damages for which the SURETY may be liable hereunder, the amount set forth in the first paragraph hereof. The term "balance of the Contract price" as used in this paragraph, shall mean the total amount payable by the COUNTY to CONTRACTOR under the Contract and any amendments thereto, less the amount properly paid by the COUNTY to CONTRACTOR.

D. No right of action shall accrue on this Performance Bond to or for the use of any person or corporation other than Santa Fe County named herein or the heirs, executors, administrators, or successors of Santa Fe County.

E. This Bond shall be enforceable without the need to have recourse to any judicial or arbitral proceedings.

SIGNED AND SEALED THIS_____DAY OF _____, 2019.

_____
CONTRACTOR – PRINCIPAL (signature)

By: _____
(Printed name and title)

_____ (seal)
NOTARY PUBLIC

My Commission expires: _____

_____
SURETY (signature)

_____
(Printed name and title)

_____ (seal)
NOTARY PUBLIC

My Commission expires: _____

_____
SURETY'S Authorized New Mexico Agent

EXHIBIT E

ASSIGNMENT OF ANTITRUST CLAIMS

TO BE EXECUTED BY GENERAL CONTRACTORS, SUBCONTRACTORS, SUPPLIERS, AND SUBSUBCONTRACTORS OF CONTRACTORS ON COUNTY CONTRACTS.

FIRM NAME: PROJECT:
ADDRESS:

PROJECT NO:

PHONE NO.:

_____ agrees that any and all claims which it may have or may inure to it for overcharges resulting from antitrust violations as to goods, services, and materials purchased in connection with the above-referenced project are hereby assigned to Santa Fe County, but only to the extent that such overcharges are passed on to the County. It is agreed that the undersigned retains all rights to any such antitrust claims to the extent of any overcharges not passed on to the County, including the right to any treble damages attributable thereto.

FIRM: _____

BY: _____
Signed by Individual empowered to obligate Suppliers, Subcontractors or Sub-subcontractors

TITLE: _____

EXHIBIT F

CERTIFICATE OF LIABILITY INSURANCE

EXHIBIT G

NOTICE OF CONTRACT AWARD

TO:

FROM: _____, Public Works Department

CONTRACT NO. _____

This is to inform that you that you have been awarded the Contract for:

Project Name: _____

Date of Award _____ Amount of Award _____

Contractor Information:

Firm Name: _____ License# _____

Address: _____ Phone #_____

It is anticipated that construction will take place:

Approximate Starting Date: _____ Approximate Completion Date: _____

Santa Fe County hereby accepts your offer on the solicitation No. _____ as reflected in this award document. The rights and obligations of the parties shall be subject to and governed by this document and any documents attached or incorporated by reference.

SANTA FE COUNTY

Name of Public Works Director or designee: _____
(Print Name)

_____
Signature

EXHIBIT H

NOTICE TO PROCEED

TO:

DATE:
PROJECT:

ATTN:

PROJECT NO.
CONTRACT NO.
IFB NO. 2019-0108-PW/KE

Enclosed is your copy of the Contract, which has been approved. Please consider this letter as official NOTICE TO PROCEED on the above-referenced project.

Your firm shall commence work within ten (10) calendar days of the above date and shall achieve Substantial Completion _____ calendar days thereafter, which shall be _____, 2019, unless modified by Change Order.

It is essential that you make reference to the above-stated project number on all documents sent to the Architect/Engineer from your office. These documents shall include correspondence, change order proposals, change orders, payment request statements, and all other project-related material which you forward to the Architect/Engineer for information and processing.

Also, before you may start any Work at the site, you must (add any other requirements):

OWNER: Santa Fe County
SFC _____DEPARTMENT

By: _____
_____
Director, SFC Department

EXHIBIT I

CHANGE ORDER

PROJECT:

CONTRACTOR
CHANGE ORDER NO:

ARCHITECT/ENGINEER

PROJECT NO:

Contractor Telephone:
Contractor e-mail:
ENGINEER'S/ARCHITECT'S PROJECT NO:

CHANGE ORDER JUSTIFICATION (Provide definitive reason for proposed change order.)

You are directed to make the following changes in this Contract: (Provide a detailed description of the Scope of the Work.)

NOT VALID UNTIL SIGNED BY BOTH THE COUNTY AND THE ARCHITECT/ENGINEER. Signature of the Contractor indicates his agreement herewith, including any adjustment in the Contract Sum or Contract Time.

The Original Contract Sum was	
Net change by previously authorized Change Orders	$0.00
The Contract Sum prior to this Change Order was he Contract Sum will be increased/decreased/unchanged	
by this Change Order in the amount of	$0.00
The new contract Sum including this Change Order will be	$0.00

The Contract Time will be increased/decreased/unchanged by ___ days.
The date of Substantial Completion as of the date of this Change Order therefore is: _____

CHANGE ORDER SIGNATURE PAGE

APPROVED

SANTA FE COUNTY By: _____ Date: _____

Approved as to form:

By: _____ Date: _____

R. Bruce Frederick
County Attorney

Finance Department:

By: _____ Date: _____

Stephanie S. Clarke
Finance Director

CONTRACTOR By: _____ Date: _____

Title: _____

ARCHITECT/ENGINEER By: _____ Date: _____

Title: _____

EXHIBIT J

CERTIFICATE OF SUBSTANTIAL COMPLETION

SANTA FE COUNTY – Public Works Department

Public Works Director or designee (name): _____

CONTRACTOR: _____

Contractor Purchase Order Number: _____

ARCHITECT/ENGINEER: _____

Project Name: _____

Contract Date: _____

Project Description - Article 2 to Agreement Between Santa Fe County and Contractor (include address and project location description):

_____

_____

_____

_____

The contractor hereby certifies the Work of this project to be in complete conformance to the Contract Documents and is substantially complete, enabling the County to make use of the Work as intended.

By its signature below the Contractor further requests Architect/Engineer and County to inspect the Work and to concur in the Work's substantial completion by their signature and/or to provide in a timely manner to Contractor a listing of work items adjudged by them as remaining to be completed or corrected. Contractor agrees to complete and correct all work items (Punch List) representative of such listing within ___ days from date of receipt from Architect/Engineer.

Contractor

_____	_____	_____
Signature	Print Name	Date

Accepted by Santa Fe County

_____	_____	_____
Signature (Public Works Director or Designee)	Print Name	Date

Inspected/Concurrence Architect/Engineer

_____	_____	_____
Signature	Print Name	Date

PUNCH LIST

A list of items (Punch List) to be completed or corrected, verified by the Architect/Engineer and County, is appended hereto. Failure to include any incomplete items on such list does not alter the responsibility of the Contractor to provide all Work in complete conformance with the Contract Documents.

The Contractor shall complete or correct the work on the punch list appended hereto by _____

(Date)

The punch list consists of _____(indicate number of items) items.

The Work performed under this Contract has been reviewed and found to be substantially complete by the Director of Public Works who has hereby established the Date of Substantial Completion as _____ (date) which is also the date of commencement of all warranties and guarantees required by the Contract Documents. The Date of Substantial Completion of the Work or designated portion thereof is the date established by the Director of Public Works (or designee) when construction is sufficiently complete, in accordance with the Contract Documents, so the County may occupy the Work, or designated portion thereof, for the use for which it is intended.

The County accepts the Work or designated portion thereof as substantially complete and assumes full possession thereof, in accordance with the contract documents.

Punch List Items: (Use additional sheets if necessary)

New Mexico Department of WORKFORCE SOLUTIONS

STATE OF NEW MEXICO
NEW MEXICO DEPARTMENT OF
WORKFORCE SOLUTIONS
Labor Relations Division
121 Tijeras Ave NE, Suite 3000
Albuquerque, NM 87102
www.dws.state.nm.us

PUBLIC WORKS PROJECT REQUIREMENTS

As a participant in a Public Works project valued at more than $60,000 in the State of New Mexico, the following list addresses many of the responsibilities that are defined by statute or regulation to each project stakeholder.

Contracting Agency

- Ensure that all Contractors wishing to bid on a Public Works project when the project is $60,000 or more are actively registered with the Public Works and Apprenticeship Application (PWAA) website: http://www.dws.state.nm.us/pwaa (Contractor Registration) prior to bidding.
- Please submit Notice of Award (NOA) and Subcontractor List(s) to the PWAA website promptly after the project is awarded.
- Please update the Subcontractor List(s) on the PWAA website whenever changes occur.
- All Sub-Contractors and tiers (excluding professional services) regardless of contract amount must be listed on the Subcontractor List and must adhere to the Public Works Minimum Wage Act.
- Ninety days after project completion please go into the PWAA system and close the project. Only Contracting Agencies are allowed to close the project. Agents or Contractors are not allowed to close projects.

General Contractor

- Provide a complete Subcontractor List and Statements of Intent (SOI) to Pay Prevailing Wages for all Contractors, regardless of amount of work, to the Contracting Agency within 3 (three) days of award.
- Ensure that all Subcontractors wishing to bid on a Public Works project have an active Contractor Registration with the Public Works and Apprenticeship Application (PWAA) website: http://www.dws.state.nm.us/pwaa prior to bidding when their bid will exceed $60,000.
- Submit weekly certified payroll bi-weekly to the Contracting Agency.
- Make certain the Public Works Apprentice and Training Act contributions are paid either to an approved Apprenticeship Program or to the Public Works Apprentice and Training Fund.
- Confirm the Wage Rate poster, provided in PWAA, is displayed at the job site in an easily accessible place.
- Make sure, when a project has been completed, the Affidavits of Wages Paid (AWP) are sent to the Contracting Agency.

- All Subcontractors and tiers (excluding professional services) regardless of contract amount must be listed on the Subcontractor List and must adhere to the Public Works Minimum Wage Act.

Subcontractor

- Ensure that all Subcontractors wishing to bid on a Public Works project have an active Contractor Registration with the Public Works and Apprenticeship Application (PWAA) website: http://www.dws.state.nm.us/pwaa prior to bidding when their bid will exceed $60,000.
- Submit weekly certified payroll bi-weekly to the General Contractor(s).
- Make certain the Public Works Apprentice and Training Act contributions are paid either to an approved Apprenticeship Program or to the Public Works Apprentice and Training Fund.
- All Subcontractors and tiers (excluding professional services) regardless of contract amount must be listed on the Subcontractor List and must adhere to the Public Works Minimum Wage Act.

Additional Information

Reference material and forms may be found at New Mexico Department of Workforce Solutions Public Works web pages at: https://www.dws.state.nm.us/Labor-Relations/Labor-Information/Public-Works.

CONTACT INFORMATION

Contact the Labor Relations Division for any questions relating to Public Works projects by email at public.works@state.nm.us or call (505) 841-4400.

Type "B" - GENERAL BUILDING
Effective January 1, 2018

	Base Rate	Fringe Rate	Apprenticeship
Asbestos Worker - Heat & Frost Insulator	31.76	11.11	0.67
Boilermaker	32.06	27.35	0.67
Bricklayer/Blocklayer/ Stonemason	23.52	8.10	0.67
Carpenter/Lather	24.00	9.47	0.67
Cement Mason	20.37	9.78	0.67
Electricians-Outside Classifications			
Groundman	22.36	11.34	0.67
Equipment Operator	32.08	13.77	0.67
Lineman/Tech	37.75	15.19	0.67
Cable Splicer	41.53	16.14	0.67
Inside Classifications			
Wireman/Technician	30.40	10.36	0.67
Cable Splicer	33.44	10.45	0.67
Sound Classifications			
Installer	23.39	8.31	0.67
Technician	28.95	7.52	0.67
Soundman	27.01	8.31	0.67
Elevator Constructor	41.10	32.40	0.67
Elevator Constructor Helper	28.77	32.40	0.67
Glazier	20.25	4.55	0.67
Ironworker	26.50	14.66	0.67
Painter (Brush/Roller/Spray)	16.75	5.88	0.67
Paper Hanger	16.75	5.88	0.67
Drywall Finisher/Taper	24.00	9.47	0.67
Plasterer	22.07	8.16	0.67
Plumber/Pipefitter	28.95	11.38	0.67
Roofer	23.78	7.60	0.67
Sheetmetal Worker	29.28	17.16	0.67
Soft Floor Layer	24.00	9.47	0.67
Sprinkler Fitter	29.90	19.67	0.67
Tile Setter	23.52	8.10	0.67
Tile Setter Helper/Finisher	15.59	8.10	0.67
Laborers			
Group I	16.09	5.68	0.67
Group II	17.00	5.68	0.67
Group III	18.00	5.68	0.67
Group IV	20.25	5.68	0.67
Operators			
Group I	20.32	6.47	0.67
Group II	22.38	6.47	0.67
Group III	22.82	6.47	0.67
Group IV	23.24	6.47	0.67
Group V	23.41	6.47	0.67
Group VI	23.62	6.47	0.67
Group VII	23.73	6.47	0.67
Group VIII	26.61	6.47	0.67
Group IX	28.89	6.47	0.67
Group X	32.13	6.47	0.67
Truck Drivers			
Group I	14.76	6.25	0.67
Group II	15.00	6.25	0.67
Group III	15.50	6.25	0.67
Group IV	15.51	6.25	0.67
Group V	15.60	6.25	0.67
Group VI	15.75	6.25	0.67
Group VII	15.90	6.25	0.67
Group VIII	16.11	6.25	0.67
Group IX	16.32	6.25	0.67

NOTE: All Contractors are required to pay SUBSISTENCE, ZONE AND INCENTIVE PAY according to the particular trade. Details are located in a PDF attachment at WWW.DWS.STATE.NM.US. Search Labor Relations/Labor Information/Public Works/Prevailing Wage Rates.

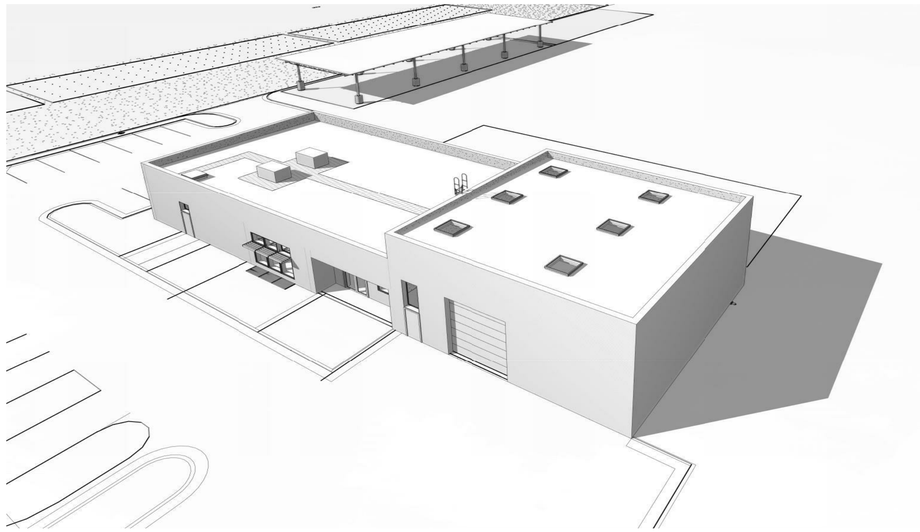

SANTA FE COUNTY
PUBLIC WORKS DEPARTMENT

PROPERTY CONTROL FACILITY

424 NM 599 SANTA FE, NM 87507

CONSTRUCTION DOCUMENTS

DECEMBER 1, 2017

PROJECT LOCATION

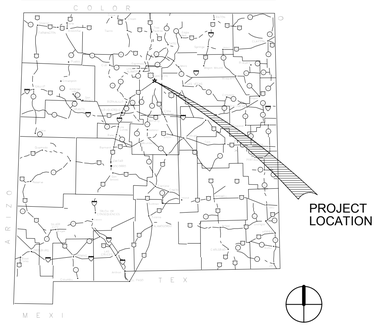

VICINITY PLAN

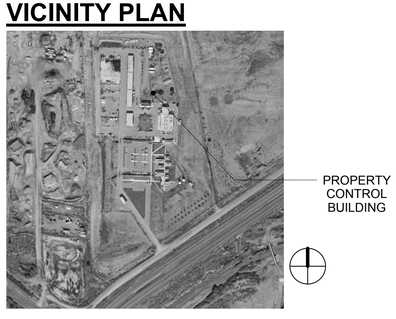

SHEET

GENERAL

G-001 COVER
G-002 CODE REVIEW

CIVIL

C-100 SURVEY
C-101 GRADING PLAN
C-102 UTILITY PLAN
C-103 DETAILS

LANDSCAPE

LS-101 LANDSCAPE PLANS

STRUCTURAL

S-001 STRUCTURAL NOTES
S-101 FOUNDATION PLAN
S-102 FRAMING PLAN
S-201 VEHICLE SHELTER STRUCTURAL
S-301 STRUCTURAL ELEVATIONS
S-401 STRUCTURAL SECTION
S-501 STRUCTURAL DETAILS
S-502 STRUCTURAL DETAILS

ARCHITECTURAL

AS-101 SITE PLANS

A-101 FLOOR PLAN
A-102 VEHICLE SHELTER
A-111 REFLECTED CEILING PLAN
A-121 ROOF PLAN
A-201 ELEVATIONS
A-301 SECTIONS
A-302 WALL SECTIONS
A-303 WALL SECTIONS
A-304 WALL SECTIONS
A-401 ENLARGED PLANS & INTERIOR ELEVATIONS
A-501 DETAILS
A-502 DETAILS
A-503 DETAILS
A-504 DETAILS
A-601 SCHEDULES

PLUMBING

P-101 SANITARY SEWER PLAN
P-201 WATER AND GAS PIPING PLAN
P-301 PLUMBING ROOF PLAN
P-401 SCHEDULE, LEGEND, AND DETAILS

MECHANICAL

M-101 HVAC PLAN
M-201 EQUIPMENT SCHEDULE AND LEGEND

ELECTRICAL

E-010 SITE SPILL LIGHT CALCULATION
E-101 ELECTRICAL SITE PLAN
E-102 SITE SPILL LIGHT CALCULATION
E-201 POWER AND SPECIAL SYSTEMS PLANS
E-202 POWER PLAN MECHANICAL EQUIPMENT
E-301 LIGHTING PLAN
E-401 POWER RISER DIAGRAM & GROUNDING DETAILS
E-501 PANEL SCHEDULES AND LOAD CALCULATIONS
E-601 IECC LIGHTING CALCULATIONS AND LIGHTING FIXTURE SCHEDULE
E-701 ELECTRICAL LEGEND

SCHEDULE OF ADDITIVE ALTERNATES

ADDITIVE ALTERNATE NO. 1

AT VEHICLE SHELTER, PROVIDE ALL BUILDING COMPONENTS ABOVE CONCRETE.

GENERAL

1. THE CONTRACTOR IS RESPONSIBLE FOR THE GENERAL PROVISIONS OF THE CONTRACT, INCLUDING GENERAL AND SUPPLEMENTARY CONDITIONS.

2. THE CONTRACTOR SHALL COMPLY WITH (62-14.1 TO 62.14-8 NMSA 1978), THE NEW MEXICO STATE CODE REGARDING LOCATION OF UTILITIES.

3. THE CONTRACTOR SHALL SUBMIT A WRITTEN REQUEST NO LESS THAN 14 DAYS PRIOR TO ANY REQUIRED INTERRUPTION OF POWER, WATER, SEWER, LABORATORY OR NATURAL GAS, STEAM, CHILLED WATER, VACUUM, COMPRESSED AIR, HVAC; SECURITY, FIRE ALARMS OR SUPPRESSION, OR ANY OTHER SYSTEMS, OR WHICH WILL IMPEDE TRAFFIC, EMERGENCY EGRESS, OR VEHICLE ACCESS OF ANY KIND.

4. SITE CLEANING SHALL BE IN ACCORDANCE WITH SPECIFICATIONS.

5. DO NOT SCALE DRAWING. CONTRACTOR SHALL VERIFY ALL EXISTING CONDITIONS AND DIMENSIONS AT THE JOB SITE AND SHALL SUBMIT ALL REQUESTS FOR INFORMATION TO THE ARCHITECT TO VERIFY PLAN CONDITIONS AND DIMENSIONS.

6. THE CONTRACTOR SHALL REPORT ANY DISCREPANCIES BETWEEN DRAWINGS AND SITE CONDITIONS TO THE ARCHITECT BEFORE PROCEEDING WITH THE WORK AND SHALL VERIFY AND COORDINATE ALL FOUNDATION PLAN DIMENSIONS WITH FLOOR PLANS, COORDINATE ALL DEMO PLANS WITH THE NEW WORK AND EXISTING CONDITIONS, AND SHALL BE RESPONSIBLE FOR PROPER EXECUTION OF ALL WORK. ANY QUESTIONS REGARDING THE INTENT OF THE PLANS AND SPECIFICATIONS SHALL BE DIRECTED TO THE ARCHITECT AS A REQUEST FOR INFORMATION.

7. FINISH FLOOR ELEVATIONS ARE TO THE TOP OF CONCRETE, TOP OF FINISH OR TO TOP OF PAVING UNLESS OTHERWISE NOTED. CEILING HEIGHT DIMENSIONS ARE TO FINISHED SURFACES.

8. ALL DIMENSIONS ARE TO THE FACE OF CONCRETE, THE CENTERLINE OF COLUMNS, GRID LINES, AND THE FACE OF STUDS UNLESS OTHERWISE NOTED.

9. ALL SYMBOLS AND ABBREVIATIONS USED ON DRAWINGS ARE CONSIDERED TO BE CONSTRUCTION STANDARDS AND COMPLY WITH THE NATIONAL CAD STANDARD VERSION 3.1. IF THE CONTRACTOR HAS QUESTIONS REGARDING SAME, OR THEIR EXACT MEANING, FIRST REFER TO THE NCS 3.1 AND THEN NOTIFY THE ARCHITECT TO REQUEST CLARIFICATION.

10. CONTRACTOR TO COORDINATE INSTALLATION OF ALL ITEMS INDICATED AS OWNER SUPPLIED EQUIPMENT AND FURNISHINGS.

11. CONTRACTOR TO PROVIDE TEMPORARY FACILITIES UTILITIES, AND SUPPORT AS REQUIRED FOR OWNER INSTALLED EQUIPMENT.

12. THE CONTRACTOR SHALL PROMPTLY CLEAN UP ANY MATERIAL EXCAVATED WITHIN THE RIGHT-OF-WAY SO THAT THE EXCAVATED MATERIAL IS NOT SUSCEPTIBLE TO BEING WASHED DOWN THE STREET OR INTO THE STORM DRAIN SYSTEM.

13. ALL EXISTING SIGNS, MARKERS DELINEATORS, ETC., WITHIN THE SITE BOUNDARY SHALL BE REMOVED, STORED AND RE-SET BY THE CONTRACTOR UNLESS OTHERWISE NOTED.

14. PROVIDE = FURNISH AND INSTALL.

15. (E) OR EX = EXISTING

BAER ARCHITECTURE NM LLC

McCLAIN + YU ARCHITECTURE & DESIGN

PROJECT TEAM

BAER ARCHITECTURE NM
227 EAST PALACE AVE. STE C
SANTA FE, NM 87501
(505) 470-6835
ALLANBAER@COMCAST.NET

STRUCTURAL ENGINEER
DRUC ENGINEERING LLC
WILLIAM DRUC PE
430 APODACA HILL ST.
SANTA FE NM 87501
(505) 984-0792
BILL@DRUCENG.COM

MEP ENGINEER
FEIGHT ENGINEERING, LLC
8416 ESTATES DRIVE NE
ALBUQUERQUE NM 87122
(505) 263-2368
LFEIGHT@FEIGHTENG.COM

MCCLAIN + YU ARCHITECTURE & DESIGN
2009 RIDGECREST DR SE
ALBUQUERQUE, NM 87108
(505) 266-2142
RAIMUND@MCCLAIN-YU.COM

CIVIL ENGINEER
SCOTT MCGEE PE LLC
9700 TANOAN DRIVE NE
ALBUQUERQUE NM 87111
(505) 263-2905
SCOTTMMCGEE@GMAIL.COM

COST ESTIMATOR/CONSTRUCTION CONSULTANT
PBI CONSTRUCTION CONSULTING
PETER BRILL
PO BOX 6020
SANTA FE NM 87505
(505) 795-7807
PBRILL@PBICC.COM

OWNER
SANTA FE COUNTY
RON SANDOVAL, PROJECT MANAGER
102 GRANTAVE.
SANTA FE NM 87501
(505) 992-9863

SANTA FE COUNTY PUBLIC WORKS DEPARTMENT
PROPERTY CONTROL FACILITY

3/27/2018 2:02:32 PM

GENERAL SHEET NOTES

A. SEE SHEET A-501 FOR PARTITION TYPES.

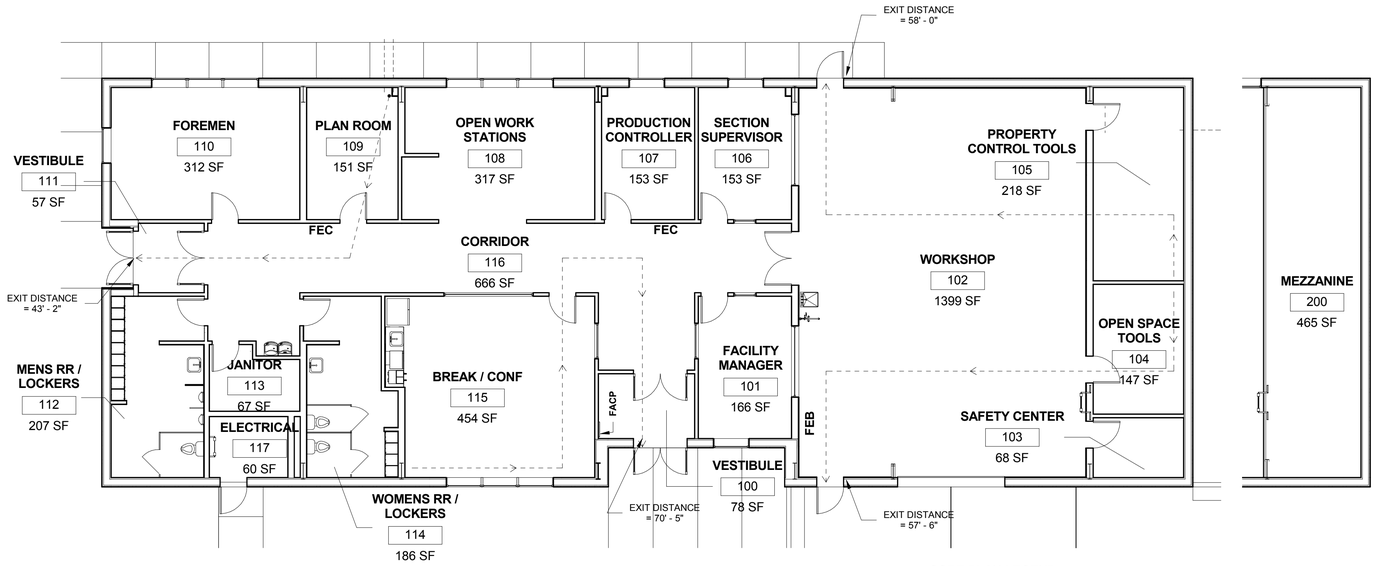

C2 BUILDING PLAN - CODE REVIEW
1/8" = 1'-0"

0' 4' 8' 16'

CODE PLAN LEGEND

— — —	PATH OF EXIT ACCESS
FEC	FIRE EXTINGUISHER & CABINET, SEMI-RECESSED
FEB	FIRE EXTINGUISHER & BRACKET
FACP	FIRE ALARM CONTROL PANEL

C4 MEZZANINE PLAN - CODE REVIEW
1/8" = 1'-0"

PROJECT DESCRIPTION
SINGLE STORY COMMERCIAL BUILDING CONSTRUCTED
OF METAL BUILDING CONSTRUCTION OVER
CONCRETE STEM & FOOTING FOUNDATIONS

APPLICABLE CODES
SANTA FE COUNTY SUSTAINABLE LAND DEVELOPMENT CODE
ZONES: PUBLIC / INSTITUTIONAL AND SDA-1
2015 INTERNATIONAL BUILDING CODE (IBC) ALL CITATIONS BELOW UNLESS NOTED OTHERWISE
2009 INTERNATIONAL ENERGY CONSERVATION CODE (IECC)
2012 UNIFORM MECHANICAL CODE (UMC)
2012 UNIFORM PLUMBING CODE (UPC)
2014 NATIONAL ELECTRIC CODE (NEC)
2003 ICC/ANSI A117.1 - (ADA)

OCCUPANCY GROUP:
BUSINESS GROUP B & F-1 FACTORY / INDUSTRIAL (N/S)

SPECIAL DETAILED REQUIREMENTS BASED ON USE AND OCCUPANCY: NONE PER CHAPTER 4

CONSTRUCTION TYPE: TYPE VB - SECTION 602

ALLOWABLE BUILDING AREAS AND STORIES:
ALLOWABLE AREA - OFFICE: 9,000 SF (NO INCREASES TAKEN)
PROPOSED AREA - OFFICE: 5,435 SF

ALLOWABLE AREA - F1; 8,500 SF
PROPOSED AREA - F1: 2238 INCL. MEZZANINE

ALLOWABLE NUMBER OF STORIES: 2 - TABLE 503
PROPOSED NUMBER OF STORES: 1

ALLOWABLE HEIGHT: 40'
PROPOSED HEIGHT: LESS THAN 40'

ALLOWABLE MEZZANINE AREA: 1/3 OF WORKSHOP = 494
PROPOSED MEZZANINE AREA: 380 SF

SEPARATION OF OCCUPANCIES
REQUIRED: NONE REQUIRED BETWEEN B AND F-1
PROVIDED: NONE PROVIDED

FIRE RESISTANCE RATING REQUIREMENTS FOR BUILDING ELEMENTS (HOURS):
PRIMARY STRUCTURAL FRAME - 0 HR. TABLE 601
BEARING WALLS - 0 HR. TABLE 601
EXTERIOR WALLS-NONBEARING - 0 HR. TABLE 602 (>10 FT REQUIRED)
INTERIOR WALLS-NONBEARING - 0 HR. TABLE 601
FLOOR CONSTRUCTION AND SECONDARY MEMBERS - 0 HR. TABLE 601
ROOF CONSTRUCTION AND SECONDARY MEMBERS - 0 HR. TABLE 601

EXTERIOR WALL PROTECTION
REQUIRED: 0 FOR OCCUPANCY GROUPS B AND F-1 WITH VB CONSTRUCTION
WHEN FIRE SEPARATION DISTANCE IS BETWEEN 10 AND 30 FEET

OCCUPANT LOAD (PER TABLE 1004.1.1):

FUNCTION	AREA	OCC. LOAD FACTOR	NO. OCCUPANTS
BUSINESS AREAS	3577	100	36 OCCS
INDUSTRIAL AREAS	2238	100	23 OCCS
		TOTALS	**TOTAL = 59 OCCS**

AUTOMATIC SPRINKLER SYSTEMS: NONE REQUIRED - SECTION 903 AND CHAPTER 4

EXIT ACCESS TRAVEL DISTANCE:
MAX ALLOWED = 200 FT - TABLE 1016.1
PROVIDED = 70.5 FT
NUMBER OF EXITS:
REQUIRED = 2 - TABLE 1021.1
PROVIDED = 3
ACCESSIBLE ROUTE: ACCESSIBLE ROUTE REQUIRED SECTION 1104.3.1

EXIT WIDTHS:
REQUIRED: .2 X 60 = 12" - SECTION 1005
PROVIDED: 32" (MIN.) CLEAR OPENING AT EACH EXIT

DEAD END CORRIDORS:

REQUIREMENT: MAX DEAD END CORRIDOR LENGTH 20 FT - SECTION 1018.4
PROVIDED: NO DEAD END CORRIDORS PROVIDED

PLUMBING FIXTURE CALCULATION - TABLE 2902.1

TOTAL OCCUPANTS = 59 (BUSINESS 36 + INDUSTRIAL 23)

	REQUIRED:	PROVIDED:	
BUSINESS OCCUPANCY			
WC - 1:25 1ST 50 THEN 1:50	3 FIXTURES	5 FIXTURES	(2 WOMENS, 3 MENS)
LAV -1:40 1ST 80 THEN 1:80	2 FIXTURES	2 FIXTURES	(1 WOMENS, 1 MENS)
SERVICE SINK	1 FIXTURE	1 FIXTURE	
DRINKING FOUNTAIN 1:100	1 FIXTURE	1 FIXTURE	

NOTE: PLUMBING FIXTURE COUNT REQ'S CALCULATED ON BASIS OF B OCCUPANCY REQUIREMENTS
- MORE RESTRICTIVE THAN F-1 REQUIREMENTS

PORTABLE FIRE EXTINGUISHERS -
OFFICE AREAS (B OCC): CLASS 'A' HAZARD - 5435 SF
REQUIRED: (2) - 2A EXTINGUISHERS
PROVIDED - (2) - 2A EXTINGUISHERS

INDUSTRIAL HAZARD AREAS (F-1 OCC): CLASS 'C' HAZARD 2238 SF
REQUIRED: (2) - 2A EXTINGUISHERS
PROVIDED - (2) - 2A EXTINGUISHERS

MAXIMUM TRAVEL DISTANCE TO FIRE EXTINGUISHER SHALL NOT EXCEED 75 FEET - SEE
CODE ANALYSIS PLAN THIS SHEET FOR LOCATIONS.

ENERGY CODE

APPLICABLE CODES: 2009 I.E.C.C. W/ NEW MEXICO AMENDMENTS (TABLE 301.1)
CLIMATE ZONE: 5B (SANTA FE COUNTY)
ENVELOPE REQUIREMENTS:

OPAQUE ELEMENTS REQUIRED R AND U-VALUES:

	REQUIRED	PROVIDED
WALLS - METAL FRAMED	R-13+ R-7.5ci	R-19+ R-7.5ci
ROOF	R-25ci	R-25ci
UNHEATED SLAB ON GRADE FLOORS:	R-10 FOR 24" BELOW	R-10 FOR 24" BELOW
OPAQUE DOORS:		
SWINGING	U - 0.37	U - 0.37
ROLL UP OR SLIDING	R - 4.75	R - 4.75

TRANSPARENT ELEMENTS

METAL FENESTRATION FRAMING		
STOREFRONT FRAME	U - 0.42	U - 0.42
ENTRANCE DOOR	U - 0.80	U - 0.80
SKYLIGHTS	U - 0.50	U - 0.50

TRANSPARENT ELEMENTS U-VALUES: (TABLE 502.3)

	REQUIRED	PROVIDED
NEW STOREFRONT WINDOWS	0.45	0.45
NEW ENTRANCE DOOR:	0.80	0.80
NEW SKYLIGHTS:	0.60	0.60

TRANSPARENT ELEMENTS REQUIRED S.H.G.C.:

	REQUIRED	PROVIDED
NEW WINDOWS	0.40	0.40
NEW SKYLIGHTS	0.40	0.40

NOTE: AREA WEIGHTED PF <.25

TRANSPARENT ELEMENTS - AREAS ALLOWED VS. PROVIDED

SKYLIGHTS: IECC TABLE 502.3 MAX AREA = 3%

GROSS ROOF AREA = 5435 SF
MAX SKYLIGHT AREA (3% OF TOTAL) = 163.05 SF
PROVIDED SKYLIGHT AREA = 137.97 SF

VERTICAL FENESTRATION IECC TABLE 502.3 MAX AREA = 40%

FACADE	GROSS FACADE AREA	FENESTRATED AREA
N	2467.44 SF	182.15 SF
W	1093.50 SF	42.40 SF
E	1093.50 SF	0 SF
S	2467.44 SF	198.26 SF
TOTALS	7121.88 SF	422.81 SF = 5.94% VERTICAL FENESTRATION

BAER ARCHITECTURE NM LLC

Baer Architecture NM
227 East Palace Avenue Suite C
Santa Fe, NM 87501
505.470.6835
allanbaer@comcast.net

McCLAIN + YU ARCHITECTURE & DESIGN

McClain + Yu Architecture & Design
2009 Ridgecrest Dr SE
Albuquerque, NM 87108
505.266.2142
info@mcclain-yu.com
www.mcclain-yu.com

CONSULTANTS

STATE OF NEW MEXICO ALLAN T. BAER NO. 2991 REGISTERED ARCHITECT
12/01/2017

STATE OF NEW MEXICO RAIMUNDO MCCLAIN No. 004757 REGISTERED ARCHITECT
DEC 1, 2017

PROJECT

SANTA FE COUNTY PUBLIC WORKS DEPARTMENT PROPERTY CONTROL FACILITY

ADDRESS

424 NM 599
SANTA FE, NM 87507

Date	DECEMBER 1, 2017
Project Number	0
Project File	
Drawn By	Author
Checked By	Checker

Copyright ©
MCCLAIN + YU ARCHITECTURE AND DESIGN

SHEET TITLE

CODE REVIEW

SHEET G-002 OF

3/27/2018 2:02:33 PM C:\Users\keith\Documents\SFC-PCD_Rachel.rvt

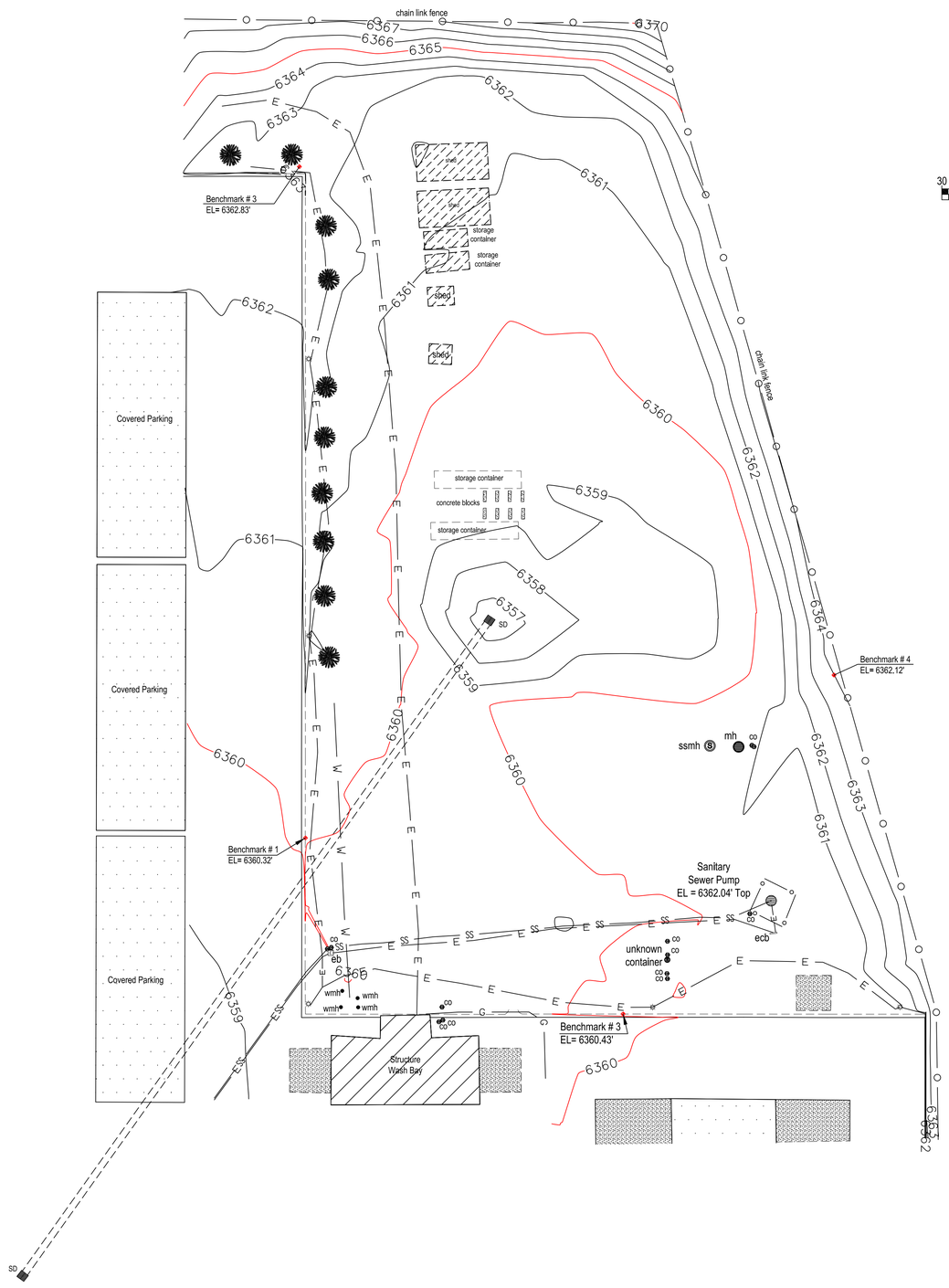

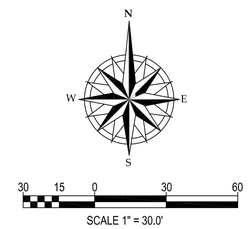

LEGEND

Elevations are derived from Static Readings reduced by OPUS at GPS Base Station. NAVD 88 Elevation = 6375.16'

- *Major Contour*
- *Minor Contour*
- *Light Pole*
- co *Cleanout plug*
- W *Underground Water line*
- SS *Underground Sanitary Sewer Line*
- G *Underground Gas Line*
- E *Underground Electric - Secondary*
- *Pine Tree*
- wmh *Water Manhole*
- ssmh *Sanitary Sewer Manhole*
- mh *Manhole*
- SD *Storm Drain*
- eb *Electric Box*
- ebc *Electric Control Box*

SURVEYORS CERTIFICATE

I, Salvador I. Vigil, a Registered New Mexico Professional Surveyor do hereby certify that this Topography Survey Plat was prepared from an actual field survey performed by me or under my direct supervision on March 2, 2017. This survey is not a Land Division or Subdivision as per the New Mexico Subdivision Act. This survey meets the minimum standards for Topography surveys set forth by the New Mexico Board of licensure for Professional Surveyors and Engineers.

Salvador I. Vigil — *June 16 ,20*

Salvador I. Vigil, — *NMPS 10988* — *Date*

SALVADOR I. VIGIL NEW MEXICO 10988 REGISTERED PROFESSIONAL LAND SURVEYOR

NO	DATE	CLASS REV	ADC	DESCRIPTION	DWN	DSGN	CHKD	SUB	APP

SANTA FE COUNTY PUBLIC WORKS DEPARTMENT

SANTA FE COUNTY PUBLIC WORKS
PROPERTY CONTROL FACILITY
424 NM SR 599

DATE	MARCH 7, 2017
DRAWN	S.I. VIGIL, PS
CHECKED	P. BRANCH
FIELD	P. BRANCH

SUBMITTED

APPROVED FOR RELEASE

LAND SURVEYING COMPANY, LLC
P.O. BOX 4384 **505-603-1511**
SANTA FE, NEW MEXICO 87502 **505-473-003**
SALVADOR I. VIGIL, NMPS 10988

SHEET ONE of ONE

BAER
ARCHITECTURE
NM, LLC

PROJECT No. L-2877 / TOPO

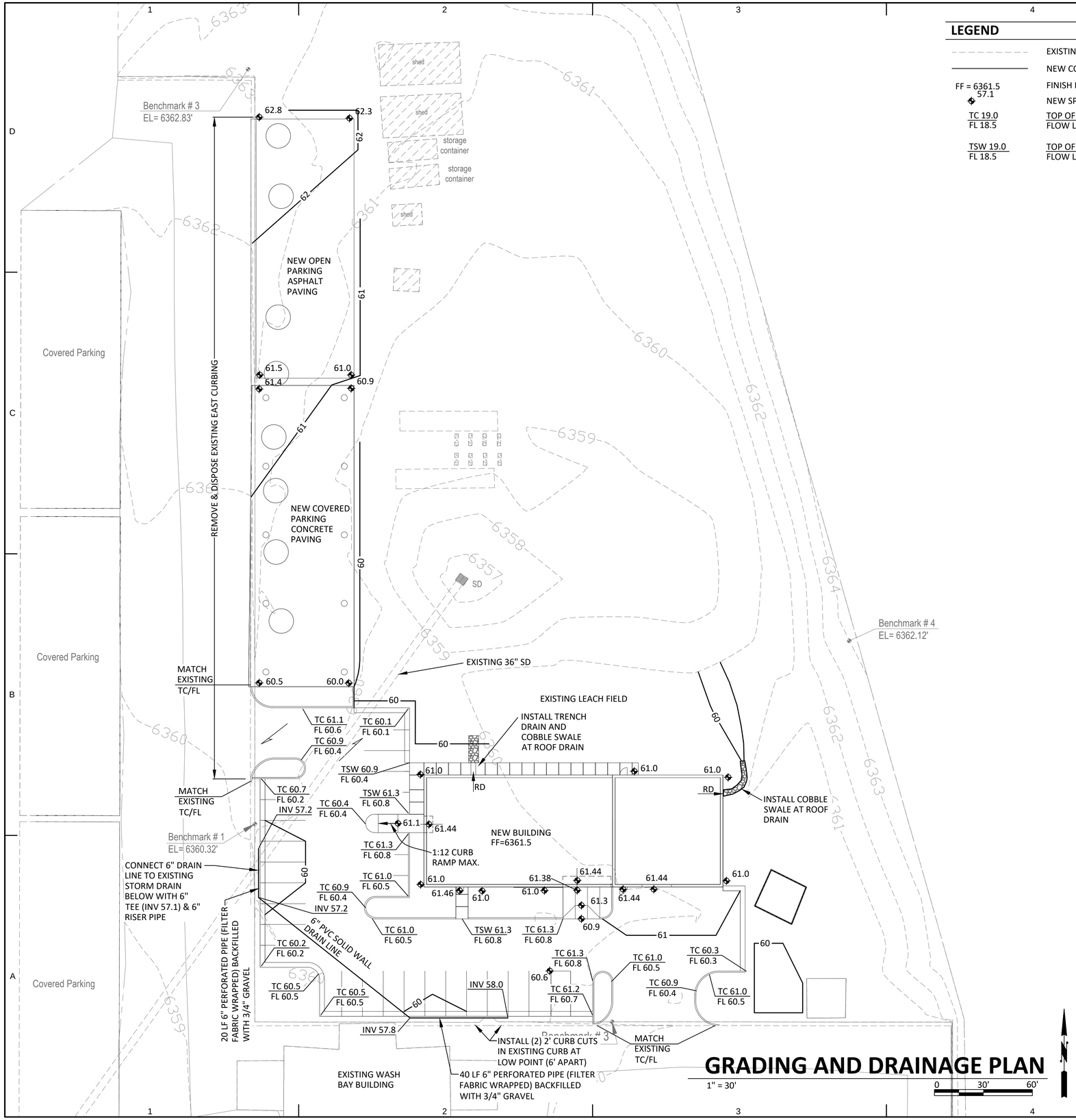

GRADING AND DRAINAGE PLAN

1" = 30'

0 30' 60'

LEGEND

	EXISTING CONTOUR LINE
	NEW CONTOUR LINE
FF = 6361.5	FINISH FLOOR ELEVATION
57.1	NEW SPOT ELEVATION
TC 19.0 / FL 18.5	TOP OF CURB / FLOW LINE
TSW 19.0 / FL 18.5	TOP OF SIDEWALK / FLOW LINE

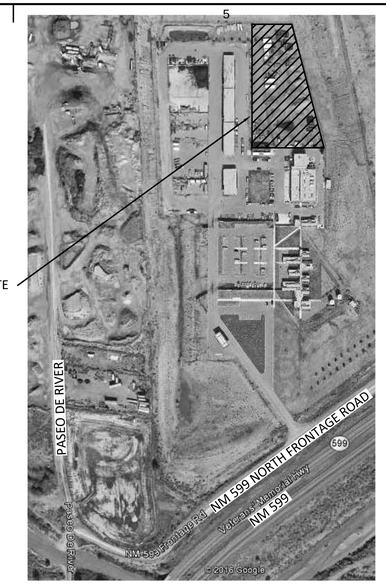

VICINITY MAP

NOT TO SCALE

DRAINAGE CALCULATIONS

AREA: 0.78 acres (33,990 sf)

BENCHMARK: Onsite point BM #1 set along west side of site as noted on plan.
ELEV= 6360.32 (NAVD 1988)

FLOOD HAZARD: From FEMA Map Panel 35049C0411 (effective 12/04/12), this site is identified as being within Zone 'X'; areas determined to be outside the 0.2% annual chance floodplain.

EXISTING CONDITIONS: The site is an existing dirt area located at the north end of the Santa Fe County property at 424 Hwy 599. The existing County complex consists of multiple buildings and parking areas. Previous development included large onsite retention areas that restrict runoff from the site

PROPOSED IMPROVEMENTS: The proposed improvements include a 5,324 SF building with paved parking and both covered and open vehicle storage areas.

DRAINAGE APPROACH: The proposed drainage plan will direct the parking lot flow toward proposed curb openings. Runoff will be intercepted by buried perforated pipes and piped west to discharge to an existing storm drain running to the southwest. Roof runoff will discharge north to an existing detention pond area north of the proposed building. The two vehicle storage areas will sheet flow east to the detention pond area.

HYDROLOGY: The existing area is entirely dirt/gravel and has land treatment of C= 0.5. The Rational method gives Q=(0.5) (5.4"/HR)(0.78)= 2.1 CFS
V= (33,900)(1.4/12) = 3,955 CF

The developed runoff rate is based on 80% impervious surfacing where C=0.9
Developed Q= (0.82)(5.4"/HR)(0.78)= 3.5 CFS
V= (33,900)(2.66/12) = 7,515 CF

The additional storage volume required is then 7,515- 3,955 = 3,560 CF

The table below is from the previously approved drainage report which shows that the existing pond volume of 211,000 CF provides more than the required 44,152 CF. No additional storage volume is required for this project.

DRAINAGE SUMMARY:

SFCPW

	SCS TR-55 CURVE NUMBER	AREA (SQ. FT.)	RUNOFF DEPTH (INCHES)	RUNOFF VOLUME (CU. FT.)	PEAK DISCHARGE (CFS)
PRE-DEVELOPED:					
NATURAL	87	1605463	1.40	187304	118.7
POST-DEVELOPED :					
ROOF / PAVED	98	418025	2.97	103461	65.6
LANDSCAPED (HERBACEOUS)	62	94282	0.48	3771	2.4
NATURAL	87	1093156	1.40	127535	80.8
TOTALS:		1605463	1.75	234767	148.8

REQUIRED DETENTION POND VOLUME = 44,152 CU. FT.
POND VOLUME PROVIDED = 211,000 CU.FT. > 44,152 CU. FT. REQUIRED

BAER ARCHITECTURE NM LLC

Baer Architecture NM
227 East Palace Avenue Suite C
Santa Fe, NM 87501
505.470.6835
allanbaer@comcast.net

McCLAIN + YU ARCHITECTURE & DESIGN

McClain + Yu Architecture & Design
2009 Ridgecrest Dr SE
Albuquerque, NM 87108
505.266.2142
info@mcclain-yu.com
www.mcclain-yu.com

CONSULTANTS

SCOTT M. McGee, PC, LLC
9700 Tanoan Dr. NE
Albuquerque, NM 87111

SCOTT M. McGEE NEW MEXICO 10519 REGISTERED PROFESSIONAL ENGINEER
11/29/17

PROJECT

SANTA FE COUNTY PUBLIC WORKS DEPARTMENT

PROPERTY CONTROL FACILITY

ADDRESS

424 NM 599
SANTA FE, NM 87507

CONSTRUCTION DOCUMENTS

Date	DECEMBER 1, 2017
Project Number	11910
Project File	
Drawn By	CB
Checked By	SMM

Copyright ©
MCCLAIN + YU ARCHITECTURE AND DESIGN

SHEET TITLE

GRADING PLAN

SHEET C-101 OF

SCOTT M. McGEE PROJECT NUMBER: 1706. FILE NAME: MG1706_C101 C102.DWG
PLOTTED: December 5, 2017

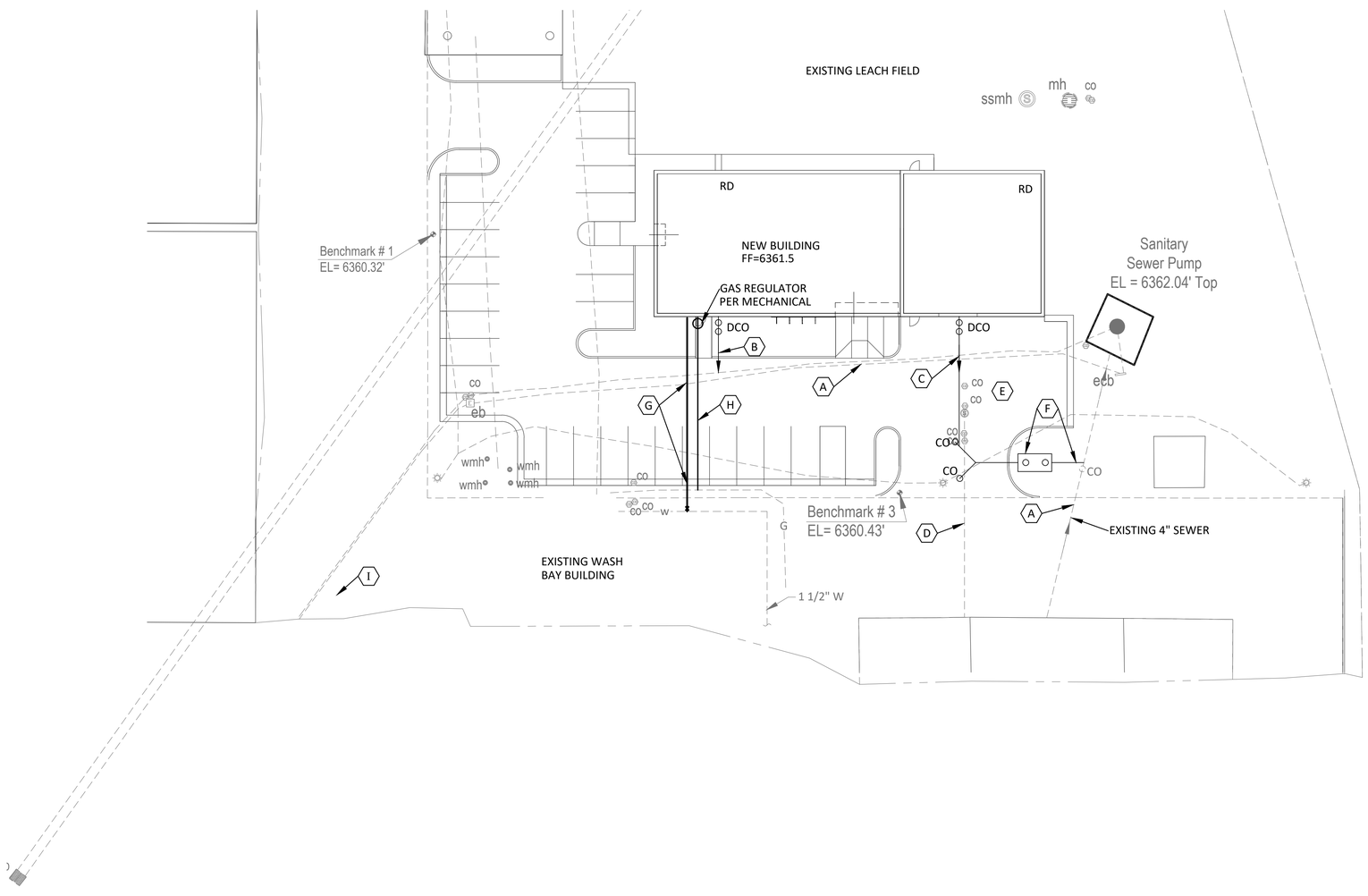

UTILITY PLAN

1" = 20'

0 20' 40'

LEGEND

SAS	EXISTING SEWER LINE
W	EXISTING WATER LINE
G	EXISTING GAS LINE
FH	EXISTING FIRE HYDRANT
SAS	NEW SEWER LINE
W	NEW WATER LINE
G	NEW GAS LINE

KEYED UTILITY NOTES

A. EXISTING SANITARY SEWER TO REMAIN.

B. NEW 4" SEWER FROM BUILDING TO CONNECT TO EXISTING SEWER LINE WITH CLEAN OUT TO GRADE IN BUILDING LINE JUST UPSTREAM OF CONNECTION. SEE PLUMBING PLAN FOR CONTINUATION IN THE BUILDING.

C. INSTALL NEW 4" TRENCH DRAIN LINE FROM BUILDING TO NEW OIL WATER SEPARATOR.

D. EXISTING TRENCH DRAIN LINE (FROM BUILDING TO THE SOUTH) TO BE CUT AND RE-ROUTED TO NEW OIL WATER SEPARATOR AS SHOWN.

E. EXISTING OIL WATER SEPARATOR TO BE ABANDONED IN PLACE. ALL PIPING ABOVE TANK TO BE REMOVED AND OUTLET LINE CAPPED.

F. NEW 1,500-GALLON OIL WATER SEPARATOR (OIL RESERVE MODEL OS-1500 OR APPROVED EQUAL) WITH 4" OUTLET LINE CONNECTED TO EXISTING ONSITE SEWER AS SHOWN.

G. INSTALL NEW 1-1/4" WATER LINE (WITH ISOLATION VALVE AND VALVE BOX) FROM EXISTING ONSITE 1-1/4" WATER TO BUILDING. SEE PLUMBING PLAN FOR CONTINUATION.

H. INSTALL NEW GAS SERVICE LINE FROM EXISTING GAS TO BUILDING METER WITH SIZE PER MECHANICAL PLAN. CONTRACTOR TO COORDINATE WITH NM GAS COMPANY.

I. EXISTING ONSITE FIRE HYDRANT TO REMAIN.

BAER ARCHITECTURE NM LLC

Baer Architecture NM
227 East Palace Avenue Suite C
Santa Fe, NM 87501
505.470.6835
allanbaer@comcast.net

McCLAIN + YU
ARCHITECTURE & DESIGN

McClain + Yu Architecture & Design
2009 Ridgecrest Dr SE
Albuquerque, NM 87108
505.266.2142
info@mcclain-yu.com
www.mcclain-yu.com

CONSULTANTS

SCOTT M. McGee, PC, LLC
9700 Tanoan Dr. NE
Albuquerque, NM 87111

SCOTT M. McGEE
NEW MEXICO
10519
REGISTERED PROFESSIONAL ENGINEER
11/29/17

PROJECT

SANTA FE COUNTY PUBLIC WORKS DEPARTMENT

PROPERTY CONTROL FACILITY

ADDRESS

424 NM 599
SANTA FE, NM 87507

CONSTRUCTION DOCUMENTS

Date	DECEMBER 1, 2017
Project Number	11910
Project File	
Drawn By	CB
Checked By	SMM

Copyright ©
MCCLAIN + YU ARCHITECTURE AND DESIGN

SHEET TITLE

UTILITY PLAN

SHEET C-102 OF

SCOTT M. McGEE PROJECT NUMBER: 1706. FILE NAME: MG1706_C101 C102.DWG
PLOTTED: November 29, 2017

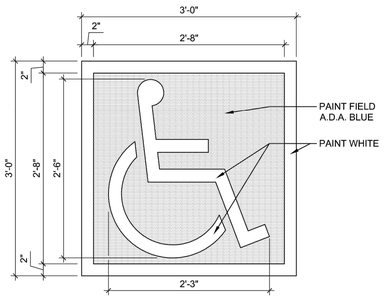

ACCESSIBLE PVMT. MARKING

1" = 1'-0"

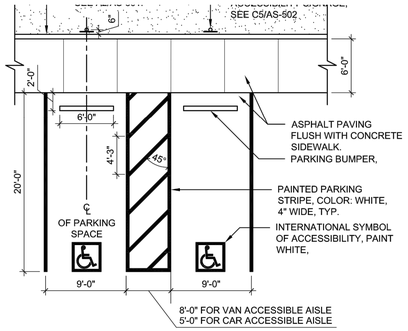

ACCESSIBLE PARKING

1/8" = 1'-0"

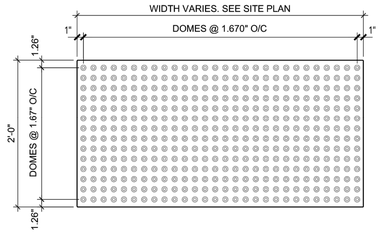

MANUFACTURER: ARMOR-TILE ADA
24"X60" SURFACE APPLIED MAT INLINE DOME TACTILE TILE
PART Nº: ADA-S-2460-BL
COLOR: YELLOW (PER ADAAG 4.29.5)
DISTRIBUTOR: WHITE CAP CONSTRUCTION SUPPLY
(505) 872-2244 - WWW.ARMOR-TILE.COM

NOTE: INSTALLATION PER MANUFACTURER'S SPECIFICATIONS

DETECTABLE WARNING

1" = 1'-0"

NOTE: ALL SIGNS WILL HAVE THE SAME POLE AND FOOTING AS THE HANDICAP SIGN SHOWN HERE.

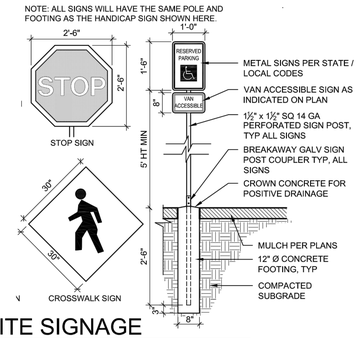

SITE SIGNAGE

1/2" = 1'-0"

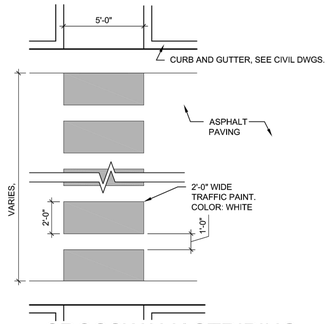

CROSSWALK STRIPING

1/4" = 1'-0"

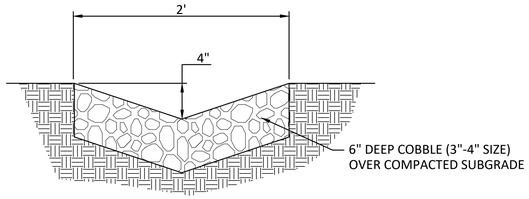

COBBLE SWALE

NOT TO SCALE

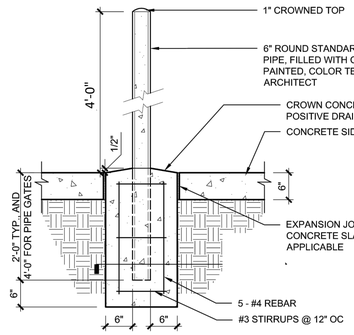

PIPE BOLLARD

3/4" = 1'-0"

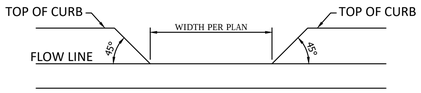

CURB CUT

NTS

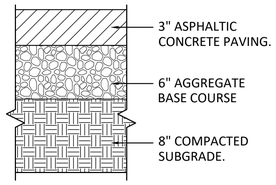

PAVEMENT SECTION

NOT TO SCALE

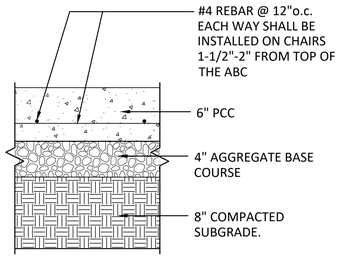

HEAVY DUTY CONCRETE PAVING

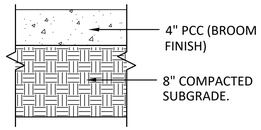

SIDEWALK SECTION

NOTE:
1. JOINTING SHALL REFLECT THE JOINTING OF ADJACENT FLATWORK, SEE PLANS.
2. WHERE BACK OF CURB AND GUTTER IS EXPOSED ALONG A RAMP, ADD 1/2" RADIUS ON EXPOSED EDGES.

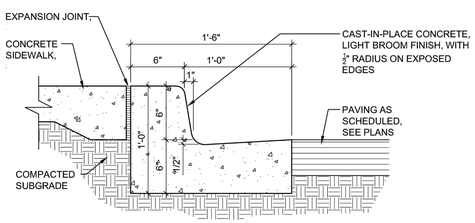

CONCRETE CURB & GUTTER

1 1/2" = 1'-0"

NOTE: PROVIDE CONTROL JOINTS @ 6'-0" O.C. MAX. AND DOWELED EXPANSION JOINTS @ 24'-0" O.C. MAX. UNLESS SHOWN OTHERWISE. RE: CONCRETE JOINT AND EXPANSION JOINT DETAILS AND SITE PLAN.

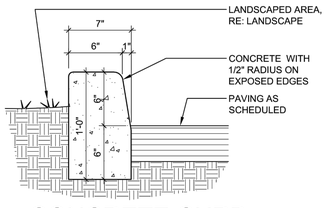

CONCRETE CURB, FREE-STANDING

1 1/2" = 1'-0"

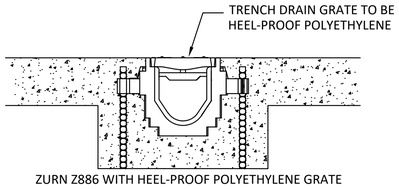

TRENCH DRAIN

NTS

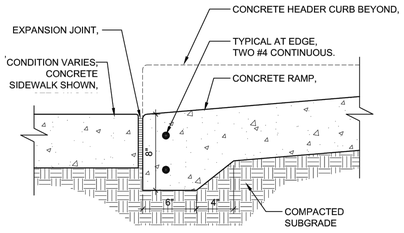

RAMP TRANSITION

1 1/2" = 1'-0"

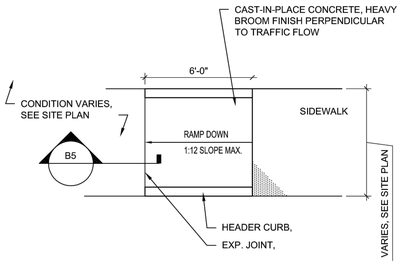

ACCESSIBLE RAMP TYPE A

1/4" = 1'-0"

BAER ARCHITECTURE NM LLC

Baer Architecture NM
227 East Palace Avenue Suite C
Santa Fe, NM 87501
505.470.6835
allanbaer@comcast.net

McCLAIN + YU
ARCHITECTURE & DESIGN

McClain + Yu Architecture & Design
2009 Ridgecrest Dr SE
Albuquerque, NM 87108
505.266.2142
info@mcclain-yu.com
www.mcclain-yu.com

CONSULTANTS

SCOTT M. McGee, PC, LLC
9700 Tanoan Dr. NE
Albuquerque, NM 87111

SCOTT M. McGEE
NEW MEXICO
10519
REGISTERED PROFESSIONAL ENGINEER
11/29/17

PROJECT

SANTA FE COUNTY
PUBLIC WORKS
DEPARTMENT

PROPERTY CONTROL
FACILITY

ADDRESS

424 NM 599
SANTA FE, NM 87507

CONSTRUCTION
DOCUMENTS

Date	DECEMBER 1, 2017
Project Number	11910
Project File	
Drawn By	CB
Checked By	SMM

Copyright ©
MCCLAIN + YU ARCHITECTURE AND DESIGN

SHEET TITLE

DETAILS

SHEET C-103 OF

SCOTT M. McGEE PROJECT NUMBER: 1706. FILE NAME: MG1706_C103.DWG

PLOTTED: November 29, 2017

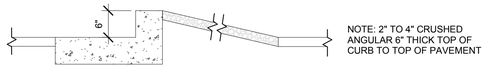

D2 DECORATIVE RIP RAP DETAIL
3/4" = 1'-0"

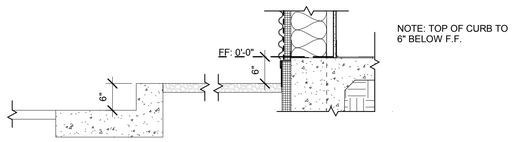

C2 DECORATIVE RIP RAP DETAIL
3/4" = 1'-0"

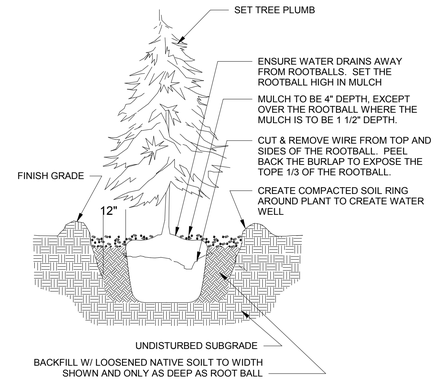

D4 TREE PLANTING DETAIL
6" = 1'-0"

GENERAL SHEET NOTES

SHEET KEYNOTES LS-101

1 EXISTING TREE, RELOCATE PER SHEET KEYNOTE #2, COORDINATE EXACT LOCATIONS OF RELOCATED TREES WITH OWNER
2 AREA OF EXISTING TREES. REMOVE ALL DEAD TREES IN AREA. RELOCATE/ REPLANT SIX TREES, SEE SHEET KEYNOTE NO. 1
3 NOT USED
4 6" CRUSHED ANGULAR RIP RAP
5 EXISTING LEACH FIELD TO REMAIN - DO NOT DISTURB, PROTECT WITH FENCE DURING CONSTRUCTION. NO CONSTRUCTION TRAFFIC ALLOWED
6 CRUSHED ROCK RIP RAP - SEE CIVIL
7 CONC RUN DOWN
8 CONC TRENCH DRAIN AND STL COVER
9 EXISTING TREE, TO REMAIN, PROTECT

LEGEND

- AREA OF WORK
- NEW ASPHALTIC CONCRETE PAVING
- NEW CONCRETE PAVING
- NEW HEAVY DUTY CONCRETE PAVING
- 6" CRUSHED ANGULAR RIP RAP
- EXISTING ASPHALT PAVING
- EXISTING BUILDING
- STRIPED LOADING AISLE

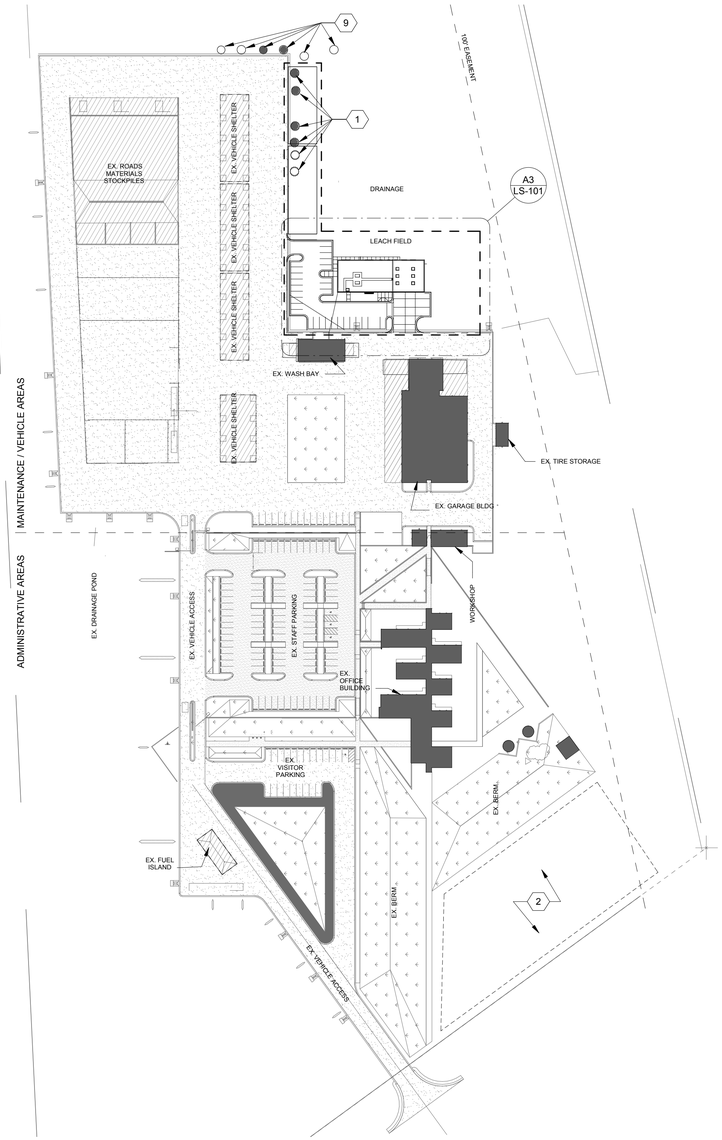

A1 CAMPUS SITE PLAN
1" = 100'-0"

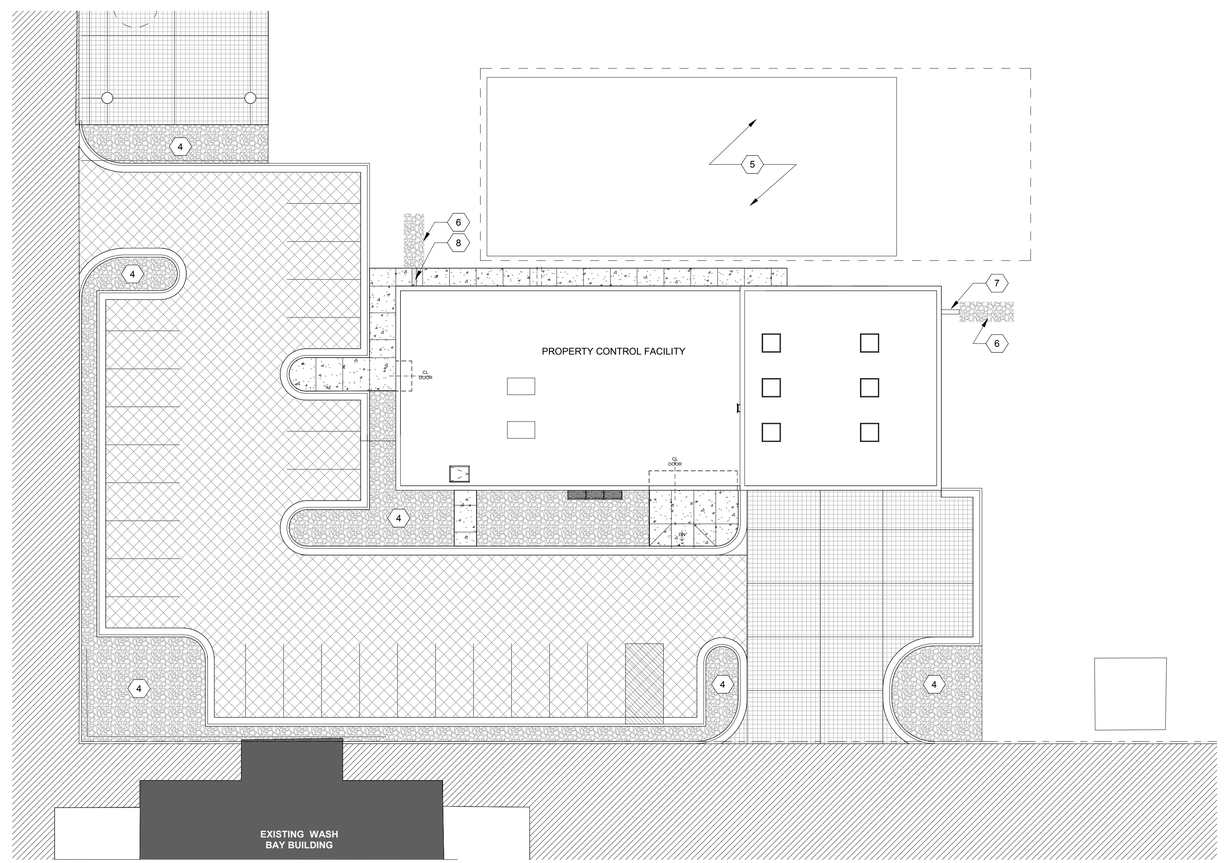

A3 LANDSCAPE PLAN
1/16" = 1'-0"

BAER ARCHITECTURE NM LLC

Baer Architecture NM
227 East Palace Avenue Suite C
Santa Fe, NM 87501
505.470.6835
allanbaer@comcast.net

McCLAIN + YU
ARCHITECTURE & DESIGN

McClain + Yu Architecture & Design
2009 Ridgecrest Dr SE
Albuquerque, NM 87108
505.266.2142
info@mcclain-yu.com
www.mcclain-yu.com

CONSULTANTS

STATE OF NEW MEXICO ALLAN T. BAER NO. 2991 REGISTERED ARCHITECT
12/01/2017

STATE OF NEW MEXICO RAIMUND MCCLAIN No. 004757 REGISTERED ARCHITECT
DEC 1, 2017

PROJECT

SANTA FE COUNTY PUBLIC WORKS DEPARTMENT PROPERTY CONTROL FACILITY

ADDRESS

424 NM 599
SANTA FE, NM 87507

Date	DECEMBER 1, 2017
Project Number	0
Project File	
Drawn By	Author
Checked By	Checker

Copyright ©
MCCLAIN + YU ARCHITECTURE AND DESIGN

SHEET TITLE

LANDSCAPE PLANS

LS-101
SHEET OF

3/27/2018 2:02:35 PM C:\Users\keith\Documents\SFC-PCD_Rachel.rvt

STRUCTURAL NOTES

1. CODES AND STANDARDS

FOLLOW ALL RELATED STRUCTURAL REQUIREMENTS AS FOUND IN THE: 2015 IBC; AND THE: 2015 NEW MEXICO BUILDING CODE, TITLE 14, CHAPTER 7, PARTS 2.
THE FOLLOWING STANDARDS ARE AS REFERENCED IN THE 2015 IBC:

REINFORCED CONCRETE:	ACI 318-14
MASONRY:	ACI 530-13
STRUCTURAL STEEL:	AISC 14th EDITION, AISC 360-10
COLD FORMED STEEL:	AISI S100-12
ALUMINUM :	AA ADMI 2015
SHEATHING:	APA PDS (PLUS SUPPLEMENTS)
DESIGN LOADS:	ASCE 7-10
WELDING:	AWS D1.4, D1.4M 2011
WOOD:	NDS 2015 EDITION

2. LIVE LOAD

FOLLOW ALL CODE RELATED STRUCTURAL REQUIREMENTS AS FOUND IN THE 2015 IBC AND THE CURRENT STATE OF NEW MEXICO BUILDING CODE FOR PROPER INSTALLATION OF ALL MEMBERS.
ROOF LIVE LOAD: SEE SEC. 1607.11.2.1. THROUGH 1607.11.2.4 (2015 IBC)
MIN. ROOF LIVE LOAD = 20 PSF
FLOOR LIVE LOAD: SEE TABLE 1607.10-1607.11 2015 IBC
MEZZANINE FLOOR LIVE LOAD: 125PSF - LIGHT STORAGE

3. SNOW LOAD

GROUND SNOW LOAD, Pg =30 PSF NON REDUCIBLE

4. WIND LOADS (WIND DESIGN DATA)

BASIC WIND SPEED (3-SECOND GUST) = 90 mph
BUILDING CATEGORY = II
WIND IMPORTANCE FACTOR, Iw=1.0
EXPOSURE CATEGORY= EXPOSURE C

5. SEISMIC LOADS

SEISMIC IMPORTANCE FACTOR =1.0
SEISMIC USE GROUP =1
SITE CLASS= D
SEISMIC DESIGN CATEGORY = C
BASIC SEISMIC-FORCE-RESISTING SYSTEM:
STEEL MOMENT FRAME

6. CONTRACTOR, VERIFY DIMENSIONS BEFORE PROCEEDING WITH WORK. THE CONTRACTOR SHALL COORDINATE STRUCTURAL DRAWINGS WITH OTHER DRAWINGS FOR INDIVIDUAL ITEMS. DISCREPANCIES UNCOVERED, IF ANY, SHALL BE REPORTED IN WRITING BEFORE PROCEEDING WITH THE WORK, SO PROPER ADJUSTMENTS CAN BE MADE. ALTHOUGH PLANS AND DETAILS ARE DRAWN AT STANDARD SCALES, DO NOT SCALE DRAWINGS.

7. SEE DRAWINGS OTHER THAN STRUCTURAL FOR: TYPES OF FLOOR FINISH AND THEIR LOCATION, DEPRESSIONS IN FLOOR SLABS, OPENINGS IN WALLS AND FLOORS REQUIRED BY ARCHITECTURAL AND MECHANICAL FEATURES, PAVING, WALKS, RAMPS, CURBS, ETC.

8. HOLES AND OPENINGS THROUGH WALLS AND FLOORS FOR DUCTS, PIPING, DRAINS AND VENTILATION SHALL BE CHECKED BY THE CONTRACTOR WHO SHALL VERIFY SIZES AND LOCATION OF SUCH HOLES OR OPENINGS WITH PLUMBING, HEATING, VENTILATING AND ELECTRICAL DRAWINGS AND THE RESPECTIVE SUBCONTRACTORS. STRUCTURAL ENGINEER SHALL BE ADVISED OF ALL PROPOSED PENETRATIONS PRIOR TO INSTALLATION

9. IF CERTAIN FEATURES ARE NOT FULLY SHOWN OR CALLED FOR ON THE DRAWINGS OR SPECIFICATIONS, THEIR CONSTRUCTION SHALL BE OF THE SAME CHARACTER AS FOR SIMILAR CONDITIONS THAT ARE SHOWN OR CALLED FOR. WHEN THE DRAWINGS CONFLICT ON ANY ITEM, THE MOST STRINGENT SHALL APPLY.

10. SOILS, FOUNDATIONS AND FOOTINGS

FOLLOW ALL RECOMENDATIONS OF THE PROJECT GEOTECHNICAL REPORT: GEO-TEST JOB# 1-70209 DATED MARCH 21, 2017
VERIFY THAT PARTS OF THE STRUCTURE: ARE CAPABLE OF SUPPORTING A CONVENTIONAL SPREAD FOOTING SYSTEM AND A CONVENTIONAL SLAB-ON -GRADE. SOILS SHALL BE NON-EXPANSIVE AND NOT SUBJECT TO VOLUMETRIC CHANGES DEPENDENT ON MOISTURE CONTENT.
FOUNDATION SOILS SHALL BE CAPABLE OF SUPPORTING ALL BUILDING LOADS AND BE CAPABLE OF AN ALLOWABLE BEARING PRESSURE OF 2000 PSF.
FOUNDATION SOILS SHALL BE CONSISTENT AND OF UNIFORM TYPE AND BEARING CAPACITY.
A PORTION OF THE FOUNDATION SHALL NOT BE PLACED ON NATURAL ROCK WHEN ANOTHER PORTION OF THE BUILDING IS PLACED ON STRUCTURAL FILL. IF ENGINEERED FILL IS USED IT SHALL BE PLACED UNDER THE DIRECTION OF THE PROJECT GEOTECHNICAL ENGINEER, WITH QUALITY NON-EXPANSIVE MATERIALS AND APPROPRIATE PLACEMENT IN SUITABLE LIFTS WITH APPROPRIATE MOISTURE CONTENT. ENGINEERED FILL SHALL BE TESTED ACCORDING TO ACCEPTED ENGINEERING PRACTICES FOR DENSITY AND MOISTURE CONTENT. LOCAL ON-SITE SOILS SHALL NOT BE BLENDED WITH ENGINEERED FILL WITHOUT THE EXPRESSED PERMISSION OF THE PROJECT GEOTECHNICAL ENGINEER. FILL SOILS MUST YIELD A NON-EXPANSIVE RELATIVELY IMPERMEABLE BUILDING PAD. IF UNUSUAL OR UNEXPECTED SOIL CONDITIONS ARE ENCOUNTERED DURING EXCAVATION OR DURING THE CONSTRUCTION OF THE BUILDING, THE PROJECT GEOTECHNICAL ENGINEER SHALL BE CONSULTED IMMEDIATELY. BOTTOMS OF EXTERIOR SPREAD FOOTINGS SHALL BE PLACED A MINIMUM OF 24 INCHES BELOW THE LOCAL FROST LINE. SEE DETAILS OF COLUMNS AND FOUNDATIONS FOR PROPER PLACEMENT OF ALL STRUCTURAL ELEMENTS
PROVIDE FRENCH DRAINS TO DAYLIGHT, SEE DRAINAGE AND GRADING PLAN
PROVIDE DRAINAGE AT FOOTINGS FOR BUILDINGS AND RETAINING WALLS. POSITIVE SLOPE OF AT LEAST ¼" PER FOOT SHALL BE PROVIDED AROUND BUILDING PERIMETERS. EVERY EFFORT SHALL BE MADE TO PREVENT BUILDING FOUNDATIONS FROM MOISTURE FLUCTUATIONS. IT IS RECOMMENDED THAT PLANTINGS AND GARDENS ADJACENT TO BUILDING FOUNDATIONS BE AVOIDED. ROOF DRAINAGE SHALL NOT DISCHARGE DIRECTLY TO THE GROUND ADJACENT TO BUILDING FOUNDATIONS.

11. STRUCTURAL STEEL AND MISCELLANEOUS

STEEL: ANCHOR RODS: A307; STRUCTURAL CONNECTIONS: A-325, ANGLES, PLATES AND BAR: ASTM A36, W-SECTIONS: GRADE A992, TUBE STEEL - RECTANGULAR HSS, HOLLOW STRUCTURAL STEEL - A500 GRADE B - 46; ROUND HSS, HOLLOW STRUCTURAL STEEL - A500 GRADE B - 42; STEEL PIPE - A53 GRADE B -35;

COMPLY WITH A.I.S.C. SPECIFICATIONS FOR DESIGN, FABRICATION AND ERECTION OF STRUCTURAL STEEL FOR BUILDINGS, AISC 14th EDITION, AISC 360-10 EDITION. MEMBERS NOTED CONTINUOUS ARE TO BE SPLICED TO DEVELOP THE FULL STRENGTH OF THE MATERIAL

USE E70 ELECTRODES W/ MINIMUM TENSILE STRENGTH Fexx=70 KSI

NOTE: ALL STRUCTURAL STEEL SHOP DRAWINGS MUST BE PROVIDED TO DRUC ENGINEERING PRIOR TO ORDERING MATERIALS.

FINAL DESIGN OF ROOF FRAMING MEMBERS BY METAL BUILDING MANUFACTURER ALL COLUMN REACTIONS SHALL BE PROVIDED TO DRUC ENGINEERING

12. CONCRETE:

MIN. COMPRESSIVE STRENGTH, f'c = 3,500 psi AT 28 DAYS
REINFORCING: ASTM A 615, GRADE 40 FOR #3 BARS OR SMALLER
GRADE 60 FOR #4, #5 BARS AND GREATER
SEE MECH. & ELEC. DRAWINGS FOR OPENINGS, CHASES, INSERTS CHAMFERS, ETC. BEFORE PLACING CONCRETE. PROVIDE KEYS & DOWELS AT ALL COLD JOINTS. PROVIDE CORNER BARS AND SPLICES WITH MIN. 32 BAR DIA. LAP (16" MIN) CHAMFER ALL CORNERS.

CLEAR CONCRETE COVER: (BETWEEN REINFORCING AND CONCRETE SURFACE)
CONCRETE CAST AGAINST EARTH: BOTTOM AND SIDES OF FOOTINGS: 3"

FORMED SURFACES EXPOSED TO EARTH OR WEATHER:
#5 AND SMALLER: 1-1/2", #6 AND LARGER: 2".
NOT EXPOSED TO EARTH OR WEATHER:
SLABS AND WALLS: 3/4",
BEAMS AND COLUMNS: 1½"

CONCRETE SLAB FLOOR: 5"-6" CONC. SLAB : #4 REBAR @ 16" O.C.E.W.

CONCRETE FOOTINGS: (EXCEPT SPOT FOOTINGS PER PLAN)
#4 HORIZ. CONT. STEEL @ MAX. 8" O.C. PER DETAILS

CONTROL JOINTS (c.j.): +/- ¼" x 1¼" DRY SAW JOINT (TO BE GROUTED) - (VERIFY WITH ARCHITECT)

13. METAL CONNECTING DEVICES

AS MANUFACTURED BY "SIMPSON" OR APPROVED EQUAL OR AS SHOWN ON PROJECT DOCUMENTS. SUBSTITUTION SHALL NOT BE MADE UNLESS APPROVED BY ENGINEER. WHERE NAILS ARE NOT SUPPLIED BY MFR., USE MAX. SIZE NAIL.

14. LIGHT GAUGE STEEL FRAMING

STEEL STUDS,TRACKS AND STRUCTURAL JOISTS ARE CALLED OUT USING GENERIC NOMENCLATURE SIZES WITH MINIMUM STRUCTURAL PROPERTIES REQUIRED. ANY MANUFACTURER'S PRODUCTS MAY BE USED PROVIDED THEY EQUAL STRENGTH AND SECTION PROPERTIES AS SHOWN ON DRAWINGS. MINIMUM YIELD STRESS 33KSI ON ALL MEMBERS 18 GA, 20 GA AND LIGHTER. MINIMUM YIELD STRESS 50 KSI ON ALL MEMBERS 16 GA,14GA, AND HEAVIER. ALL WALLS TO HAVE 16

GA TRACK WELDED TO TOP AND BOTTOM OF STUDS, WITH A ⅛" FILLET WELD EACH SIDE OF STUD FOR THE FULL WIDTH OF THE STUD FLANGE. PROVIDE 16 GA. BRIDGING CHANNELS CONTINUOUS @48"O.C. VERTICAL

MAXIMUM (2½" FOR 6" AND 8" STUDS, 1½" FOR 4" STUDS) WELD TO STUDS
AT PUNCHOUTS WITH 16 GA. CLIP ANGLES. AXIAL LOAD-BEARING STUDS

MUST BE SEATED TIGHT WITHIN 1/16" AGAINST TRACK WEB. ALL LINTELS IN LOAD-BEARING WALLS SHALL HAVE TWO WEB STIFFENERS PLACED AT EACH END OF THE SPAN DIRECTLY ABOVE LOAD BEARING DOUBLE TRIMMER STUDS. NO PART OF BEARING WALL ASSEMBLY INCLUDING TRACK, STUDS,BRACING, ETC. MAY BE CUT, NOTCHED, BENT OR ALTERED FOR ANY REASON WHATSOEVER WITHOUT THE PRIOR APPROVAL OF THE ENGINEER.

15. STEEL BUILDING DESIGN AMD DETAILS BY METAL BUILDING MANUFACTURER TO BE DETERMINED. PROVIDE CONSTRUCTION DOCUMENTS TO ARCHITECT & DRUC ENGINEERING FOR REVIEW PRIOR TO ORDERING BUILDING PACKAGE. PROVIDE COLUMN REACTIONS TO DRUC ENGINEERING FOR FINAL FOUNDATION DESIGN. FOLLOW ALL OF THE BUILDING MANUFACTURER'S GUIDELINES AND DETAILS. FORWARD ANY REQUESTS FOR INFORMATION TO THE ARCHITECT.

ABBREVIATIONS

B.B.= BEAM BEARING
T.O.P. = TOP OF PARAPET
F.F. = FINISH FLOOR
F.G.= FINISH GRADE
ARCH = ARCHITECTURAL DRAWINGS
H-F = HEM-FIR
D-F-L = DOUGLAS-FIR-LARCH
S-P-F (S) = SPRUCE-PINE-FIR (SOUTH)
T.O.S. = TOP OF SLAB ELEVATION
S.F. = STEPPED FOOTING
B.O.F. = BOTTOM OF FOOTING
T.O.S.W. = TOP OF STEM WALL
A.R. = ANCHOR RODS (ANCHOR BOLTS)
c.j. = CONTROL JOINT
HDR = STRUCTURAL HEADER BEAM / LINTEL
CMU = CONCRETE MASONRY UNIT
M.O. = MASONRY OPENING (CONCRETE OPENING)

BAER ARCHITECTURE NM LLC

Baer Architecture NM
227 East Palace Avenue Suite C
Santa Fe, NM 87501
505.470.6835
allanbaer@comcast.net

McCLAIN + YU
ARCHITECTURE & DESIGN

McClain + Yu Architecture & Design
2009 Ridgecrest Dr SE
Albuquerque, NM 87108
505.266.2142
info@mcclain-yu.com
www.mcclain-yu.com

CONSULTANTS

WILLIAM M. DRUC
NEW MEXICO
13853
REGISTERED PROFESSIONAL ENGINEER
12.1.2017

DRUC ENGINEERING
tel 505.983.4992
fax 505.984.0792

Structural Engineers
430 Apodaca Hill
Santa Fe,
New Mexico 87501

bill@druceng.com

PROJECT

SANTA FE COUNTY PUBLIC WORKS DEPARTMENT PROPERTY CONTROL FACILITY

ADDRESS

424 NM 599
SANTA FE, NM 87507

Date	01 December, 2017
Project Number	11910
Project File	
Drawn By	JLLCC
Checked By	WMD

Copyright ©
MCCLAIN + YU ARCHITECTURE AND DESIGN

SHEET TITLE

STRUCTURAL NOTES

S-001

SHEET 1 OF 8

01 December, 2017

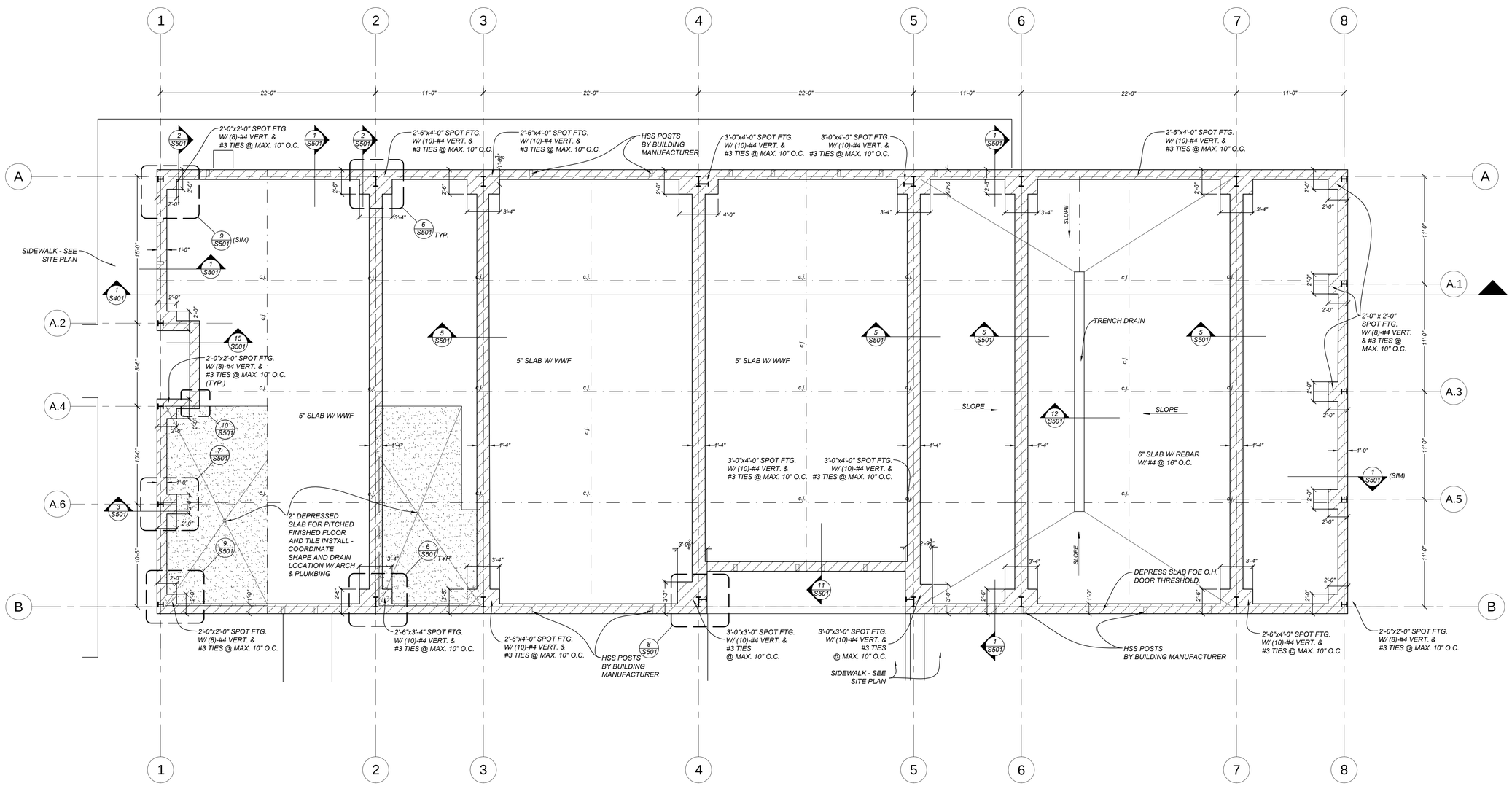

1 S-101 FOUNDATION PLAN
SCALE: 3/16"=1'-0"

N

FOUNDATION NOTES

METAL BUILDING MANUFACTURER SHALL PROVIDE FULL SET OF REACTIONS TO DRUC ENGINEERING FOR FINAL FOUNDATION DESIGN

1. SOIL ALLOWABLE BEARING PRESSURE = 2000 PSF; SEE STRUCTURAL NOTES

2. BASE PLATE AND ANCHOR RODS BY METAL BUILDING MANUFACTURER

BAER ARCHITECTURE NM LLC

Baer Architecture NM
227 East Palace Avenue Suite C
Santa Fe, NM 87501
505.470.6835
allanbaer@comcast.net

McCLAIN + YU ARCHITECTURE & DESIGN

McClain + Yu Architecture & Design
2009 Ridgecrest Dr SE
Albuquerque, NM 87108
505.266.2142
info@mcclain-yu.com
www.mcclain-yu.com

CONSULTANTS

WILLIAM M. DRUC NEW MEXICO 13853 REGISTERED PROFESSIONAL ENGINEER 12.1.2017

DRUC ENGINEERING
Structural Engineers
430 Apodaca Hill
Santa Fe,
New Mexico 87501
tel 505.983.4992
fax 505.984.0792
bill@druceng.com

PROJECT

SANTA FE COUNTY PUBLIC WORKS DEPARTMENT PROPERTY CONTROL FACILITY

ADDRESS

424 NM 599
SANTA FE, NM 87507

Date	01 December, 2017
Project Number	11910
Project File	
Drawn By	JLLCC
Checked By	WMD

Copyright ©
MCCLAIN + YU ARCHITECTURE AND DESIGN

SHEET TITLE

FOUNDATION PLAN

S-101

SHEET 2 OF 8

01 December, 2017

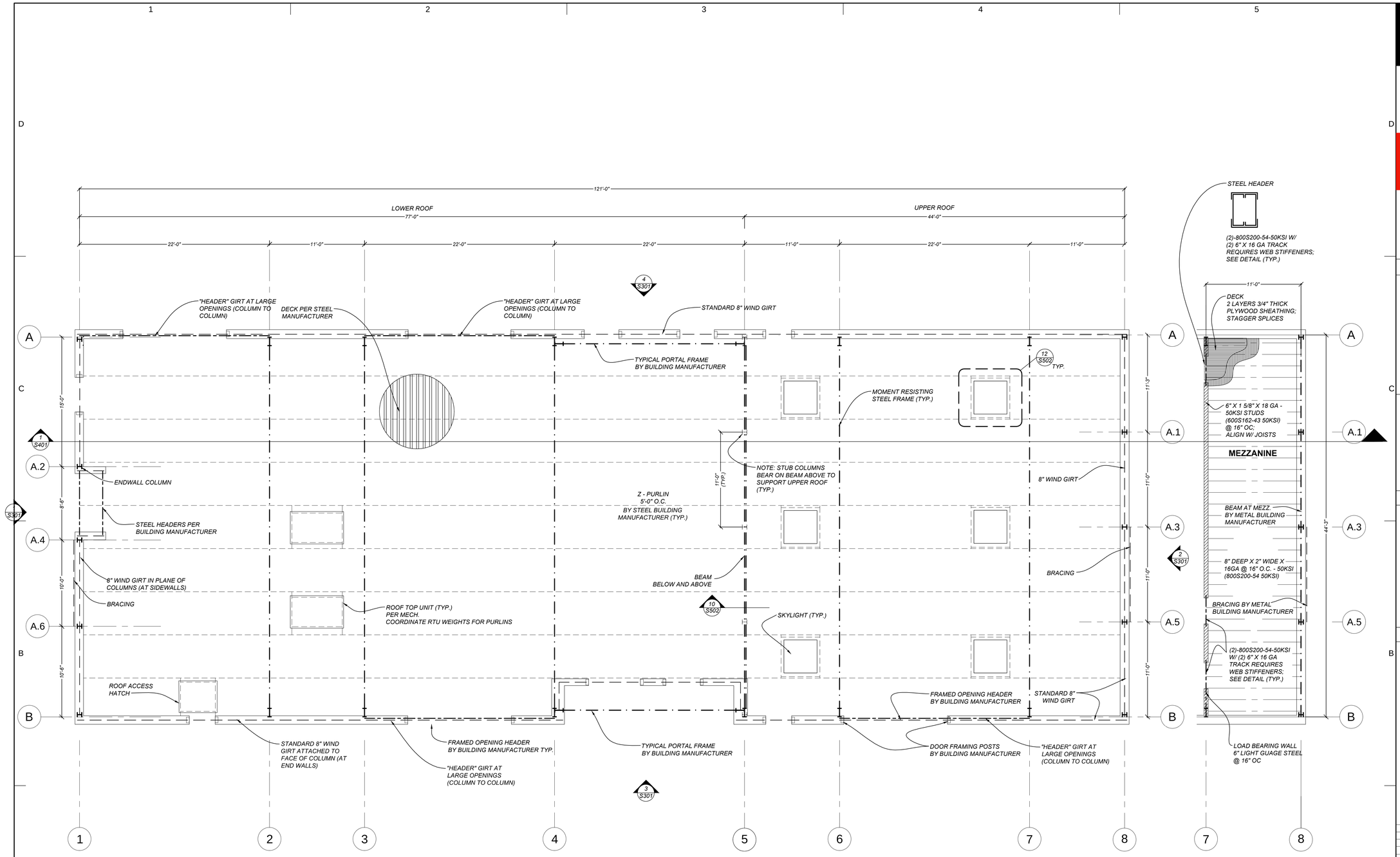

1 S-102 ROOF FRAMING PLAN
SCALE: 3/16"=1'-0"

N

2 S-102 MEZZANINE FRAMING PLAN
SCALE: 3/16"=1'-0"

N

ROOF FRAMING NOTES

1. STEEL FRAME COLUMNS, PORTAL FRAME, PURLINS, FRAMING AT RTU'S & SKYLIGHTS BY METAL BUILDING MANUFACTURER
2. ROOF DESIGNED FOR 30PSF SNOW LOAD, NON-REDUCIBLE.

NOTE: PROVIDE STRUCTURAL HEADERS AND JAMBS AT ALL OPENINGS.

MEZZANINE DESIGNED FOR 125 LBS / SQ. FT NON-REDUCIBLE. LIGHT STORAGE

BAER ARCHITECTURE NM LLC

Baer Architecture NM
227 East Palace Avenue Suite C
Santa Fe, NM 87501
505.470.6835
allanbaer@comcast.net

McCLAIN + YU ARCHITECTURE & DESIGN

McClain + Yu Architecture & Design
2009 Ridgecrest Dr SE
Albuquerque, NM 87108
505.266.2142
info@mcclain-yu.com
www.mcclain-yu.com

CONSULTANTS

WILLIAM M. DRUC NEW MEXICO 13853 REGISTERED PROFESSIONAL ENGINEER 12.1.2017

DRUC ENGINEERING
tel 505.983.4992
fax 505.984.0792

Structural Engineers
430 Apodaca Hill
Santa Fe,
New Mexico 87501

bill@druceng.com

PROJECT

SANTA FE COUNTY PUBLIC WORKS DEPARTMENT PROPERTY CONTROL FACILITY

ADDRESS

424 NM 599
SANTA FE, NM 87507

Date	01 December, 2017
Project Number	11910
Project File	
Drawn By	JLLCC
Checked By	WMD

Copyright ©
MCCLAIN + YU ARCHITECTURE AND DESIGN

SHEET TITLE

FRAMING PLAN

S-102

SHEET 3 OF 8

01 December, 2017

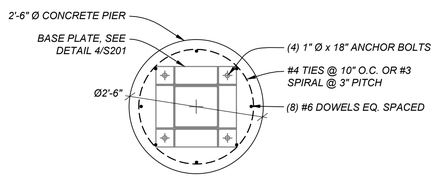

PLAN VIEW OF CONRETE PIER

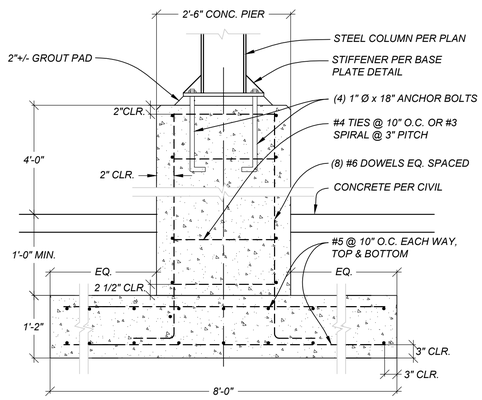

3 S201 SPOT FOOTING DETAIL
SCALE: ¾"=1'-0"

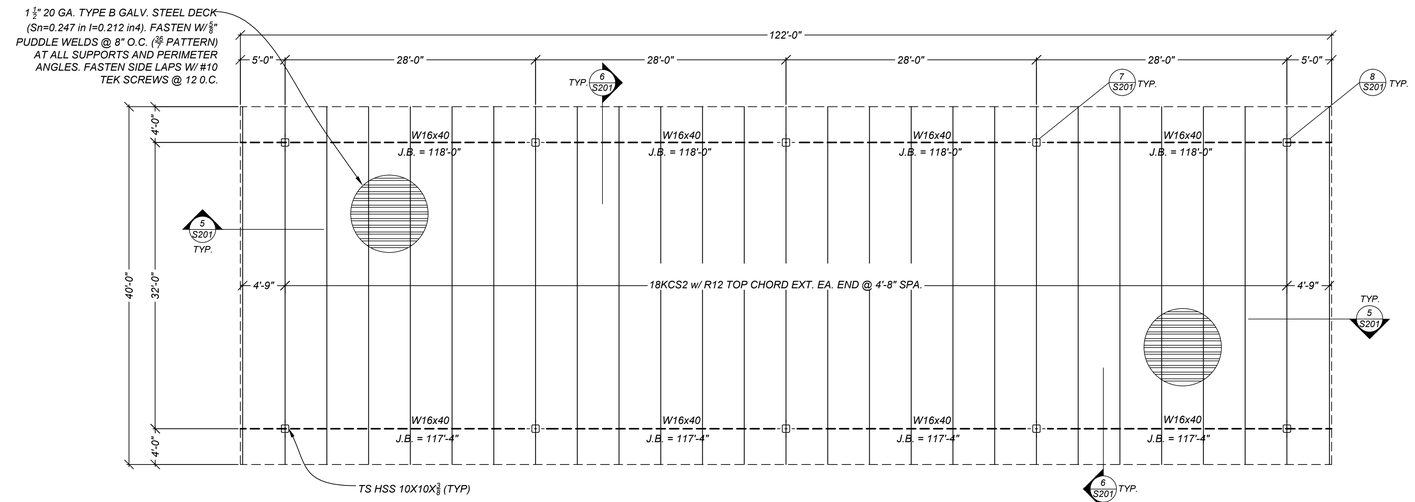

ADDITIVE ALTERNATE NO. 1: AT VEHICLE SHELTER, PROVISION OF ALL BUILDING COMPONENTS ABOVE CONCRETE.

1 S201 SMALL VEHICLE SHELTER - ROOF FRAMING PLAN
SCALE: 1/8"=1'-0"

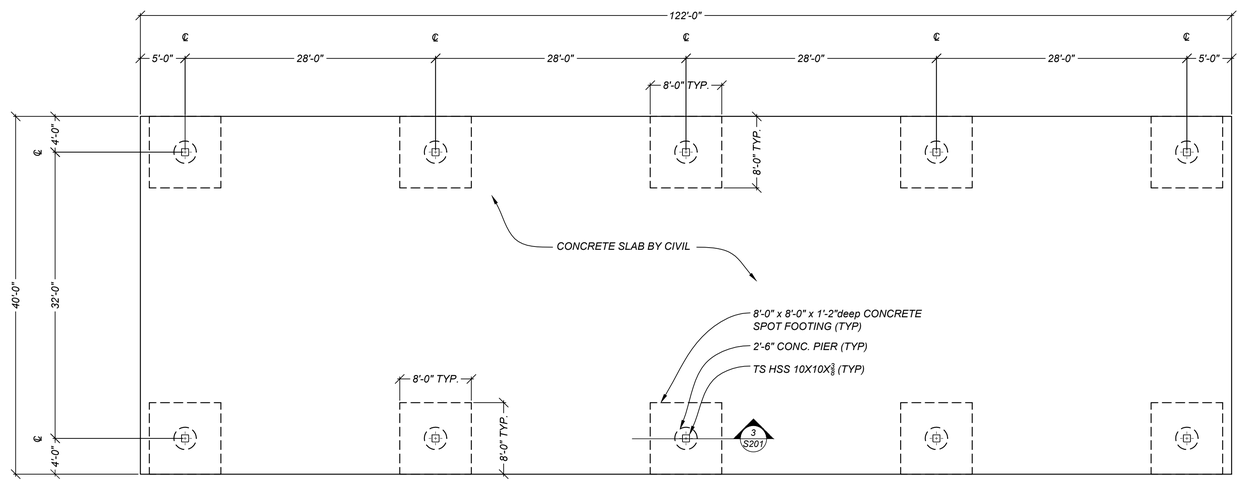

2 S201 SMALL VEHICLE SHELTER - FOUNDATION PLAN
SCALE: 1/8"=1'-0"

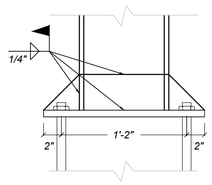

PLAN VIEW OF CONRETE PIER

PROVIDE SHOP DRAWING FOR REVIEW

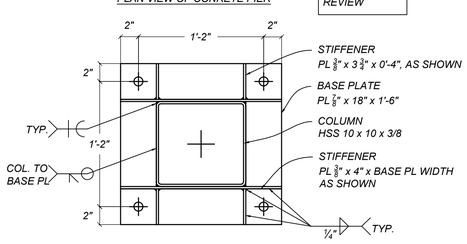

4 S201 BASE PLATE DETAIL
SCALE: 1 1/2"=1'-0"

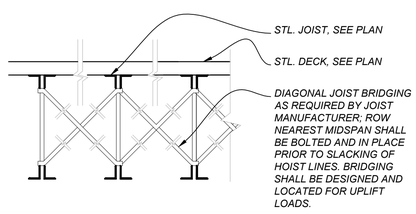

5 S201 SECTION DETAIL
SCALE: 1 1/2"=1'-0"

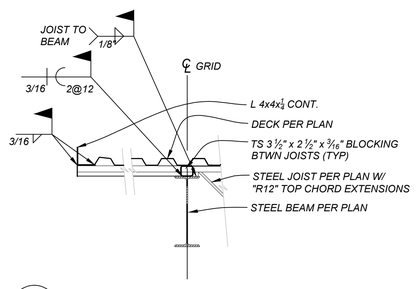

6 S201 SECTION DETAIL
SCALE: 3/4"=1'-0"

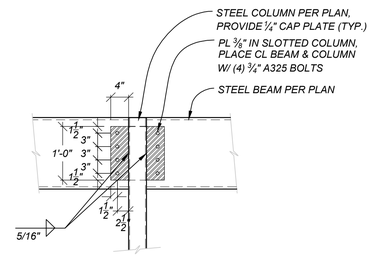

7 S201 SECTION DETAIL
SCALE: 3/4"=1'-0"

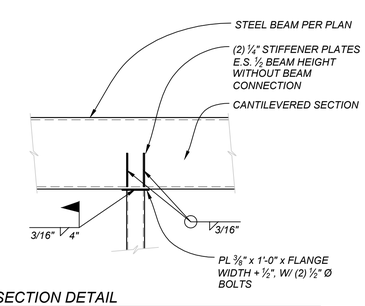

8 S201 SECTION DETAIL
SCALE: 3/4"=1'-0"

BAER ARCHITECTURE NM LLC

Baer Architecture NM
227 East Palace Avenue Suite C
Santa Fe, NM 87501
505.470.6835
allanbaer@comcast.net

McCLAIN + YU
ARCHITECTURE & DESIGN

McClain + Yu Architecture & Design
2009 Ridgecrest Dr SE
Albuquerque, NM 87108
505.266.2142
info@mcclain-yu.com
www.mcclain-yu.com

CONSULTANTS

WILLIAM M. DRUC NEW MEXICO 13853 REGISTERED PROFESSIONAL ENGINEER
12.1.2017

DRUC ENGINEERING
Structural Engineers
430 Apodaca Hill
Santa Fe,
New Mexico 87501
tel 505.983.4992
fax 505.984.0792
bill@druceng.com

PROJECT

SANTA FE COUNTY PUBLIC WORKS DEPARTMENT PROPERTY CONTROL FACILITY

ADDRESS

424 NM 599
SANTA FE, NM 87507

Date	01 December, 2017
Project Number	11910
Project File	
Drawn By	JLLCC
Checked By	WMD

Copyright ©
MCCLAIN + YU ARCHITECTURE AND DESIGN

SHEET TITLE

VEHICLE SHELTER STRUCTURAL

S-201

SHEET 4 OF 8

01 December, 2017

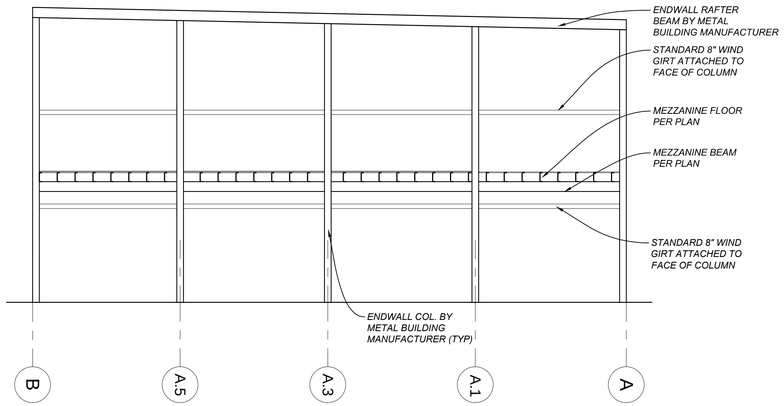

2 S-301 STRUCTURAL ELEVATION
SCALE: 3/16"=1'-0"

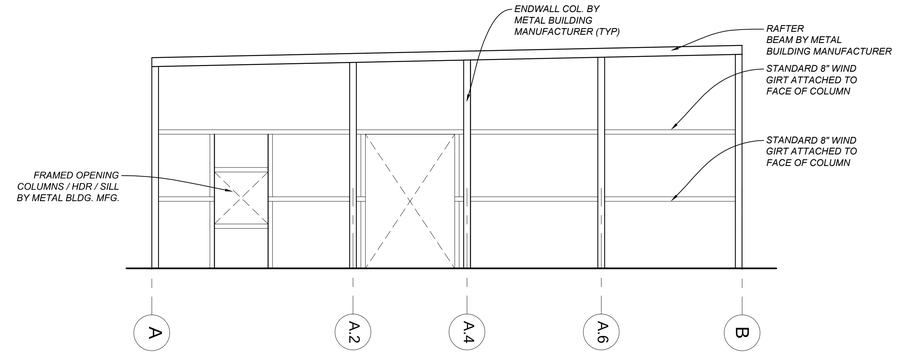

1 S-301 STRUCTURAL ELEVATION
SCALE: 3/16"=1'-0"

GENERAL NOTE: PARAPETS AND BUILDING OUTLINE NOT SHOWN

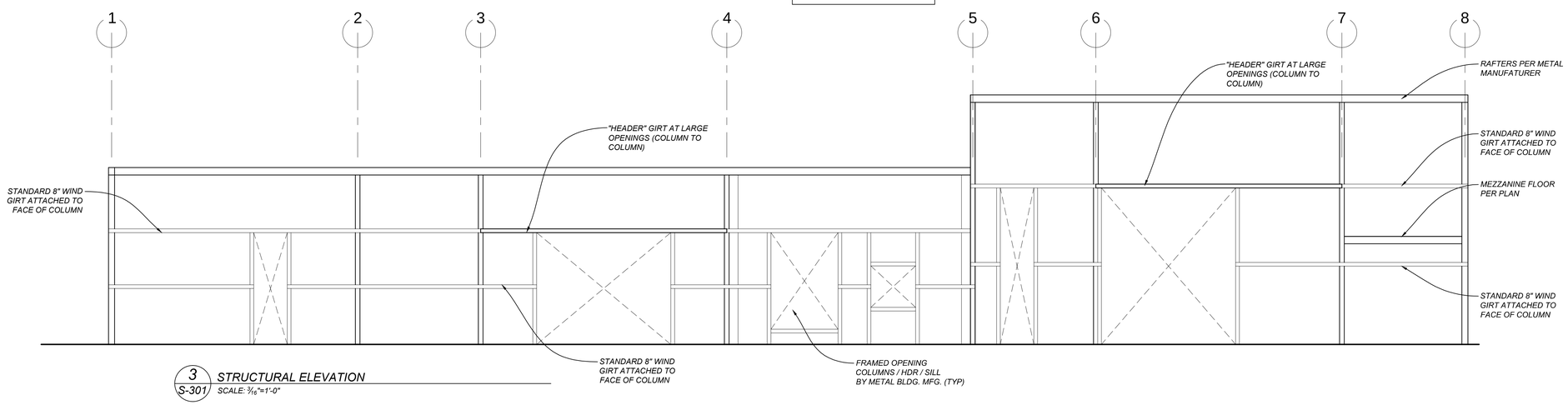

3 S-301 STRUCTURAL ELEVATION
SCALE: 3/16"=1'-0"

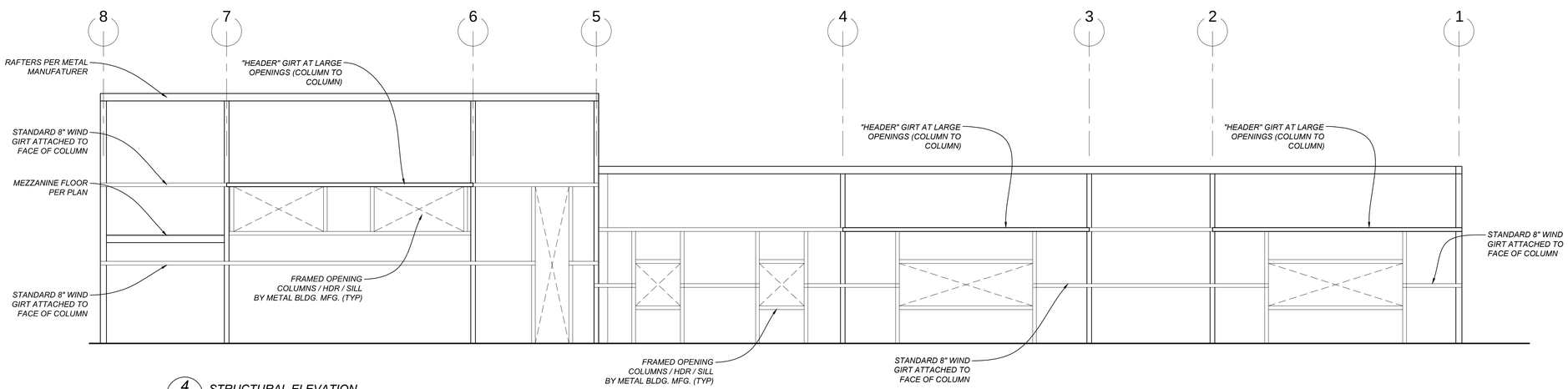

4 S-301 STRUCTURAL ELEVATION
SCALE: 3/16"=1'-0"

01 December, 2017

BAER ARCHITECTURE NM LLC

Baer Architecture NM
227 East Palace Avenue Suite C
Santa Fe, NM 87501
505.470.6835
allanbaer@comcast.net

McCLAIN + YU
ARCHITECTURE & DESIGN

McClain + Yu Architecture & Design
2009 Ridgecrest Dr SE
Albuquerque, NM 87108
505.266.2142
info@mcclain-yu.com
www.mcclain-yu.com

CONSULTANTS

WILLIAM M. DRUC NEW MEXICO 13853 REGISTERED PROFESSIONAL ENGINEER
12.1.2017

DRUC ENGINEERING
Structural Engineers
430 Apodaca Hill
Santa Fe,
New Mexico 87501
tel 505.983.4992
fax 505.984.0792
bill@druceng.com

PROJECT

SANTA FE COUNTY PUBLIC WORKS DEPARTMENT PROPERTY CONTROL FACILITY

ADDRESS

424 NM 599
SANTA FE, NM 87507

Date	01 December, 2017
Project Number	11910
Project File	
Drawn By	JLLCC
Checked By	WMD

Copyright ©
MCCLAIN + YU ARCHITECTURE AND DESIGN

SHEET TITLE

STRUCTURAL ELEVATIONS

S-301

SHEET 5 OF 8

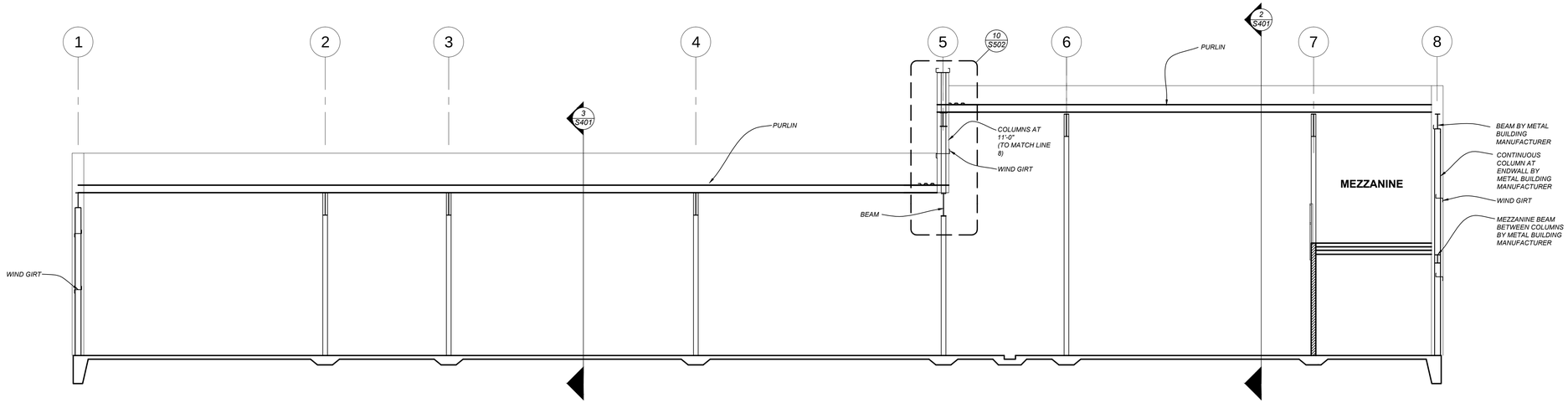

1 S-401 STRUCTURAL SECTION
SCALE: 3/16"=1'-0"

GENERAL NOTE: SEE SHEET
S502 FOR PARAPET DETAILS

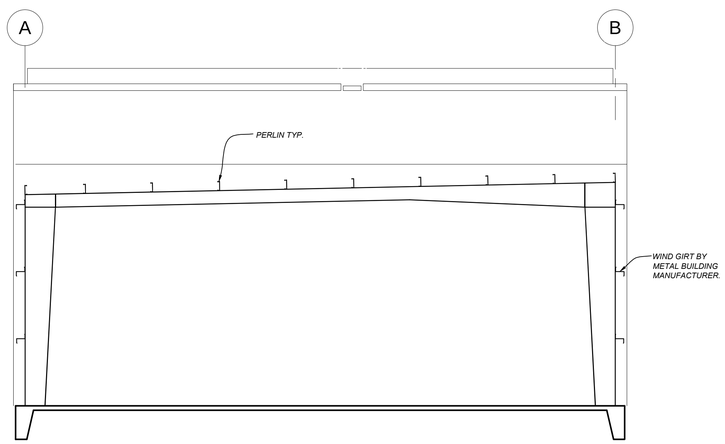

3 S-401 STRUCTURAL SECTION
SCALE: 3/16"=1'-0"

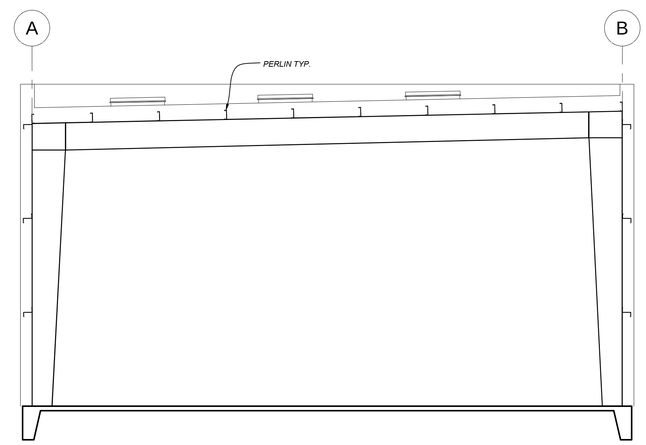

2 S-401 STRUCTURAL SECTION
SCALE: 3/16"=1'-0"

BAER
ARCHITECTURE
NM LLC

Baer Architecture NM
227 East Palace Avenue Suite C
Santa Fe, NM 87501
505.470.6835
allanbaer@comcast.net

McCLAIN + YU
ARCHITECTURE & DESIGN

McClain + Yu Architecture & Design
2009 Ridgecrest Dr SE
Albuquerque, NM 87108
505.266.2142
info@mcclain-yu.com
www.mcclain-yu.com

CONSULTANTS

WILLIAM M. DRUC
NEW MEXICO
13853
REGISTERED PROFESSIONAL ENGINEER
12.1.2017

DRUC ENGINEERING
Structural Engineers
430 Apodaca Hill
Santa Fe,
New Mexico 87501
tel 505.983.4992
fax 505.984.0792
bill@druceng.com

PROJECT

SANTA FE COUNTY PUBLIC WORKS DEPARTMENT PROPERTY CONTROL FACILITY

ADDRESS

424 NM 599
SANTA FE, NM 87507

Date	01 December, 2017
Project Number	11910
Project File	
Drawn By	JLLCC
Checked By	WMD

Copyright ©
MCCLAIN + YU ARCHITECTURE AND DESIGN

SHEET TITLE

STRUCTURAL SECTION

S-401

SHEET 6 OF 8

01 December, 2017

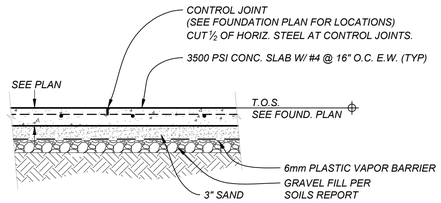

4 S501 SLAB DETAIL
SCALE: ¾"=1'-0"

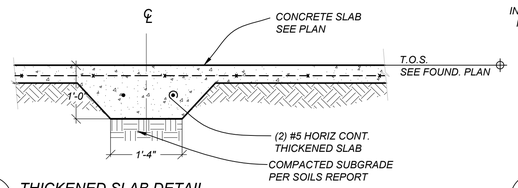

5 S501 THICKENED SLAB DETAIL
SCALE: ¾"=1'-0"

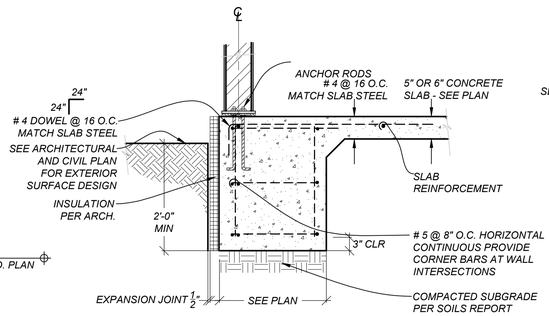

3 S501 FOUNDATION DETAIL
SCALE: ¾"=1'-0"

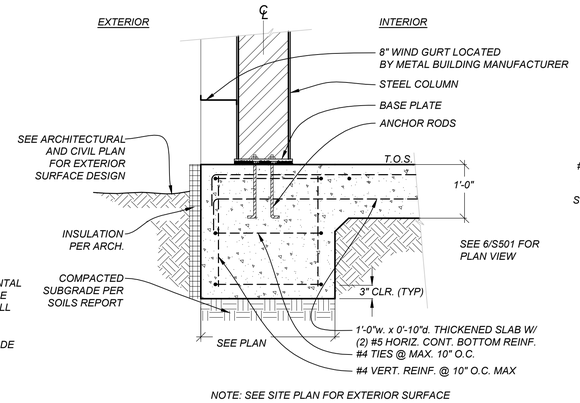

2 S501 FOUNDATION DETAIL
SCALE: ¾"=1'-0"

1. FINAL BASEPLATE DESIGN BY METAL BUILDING MANUFACTURER.
2. ANCHOR RODS TO BE DETERMINED BY METAL BUILDING MANUFACTURER.
3. COLUMNS BY METAL BUILDING MANUFACTURER.
4. WIND GIRT BY METAL BUILDING MANUFACTURER.
5. COMPACTION AT ENTRY SLAB MUST BE SIMILAR TO SPECIFICATIONS FOR BUILDING. NO SETTLEMENT ALLOWED.

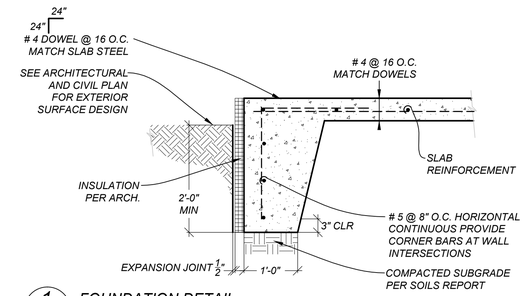

1 S501 FOUNDATION DETAIL
SCALE: ¾"=1'-0"

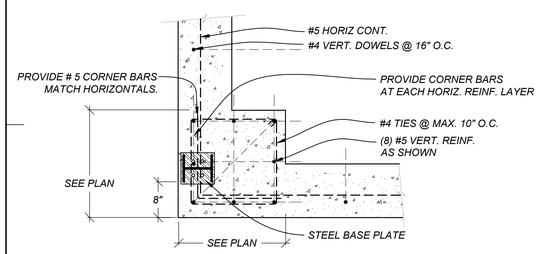

NOTE: SEE 7/S501 FOR SIMILAR NOTES

9 S501 FOUNDATION DETAIL (PLAN VIEW)
SCALE: ¾"=1'-0"

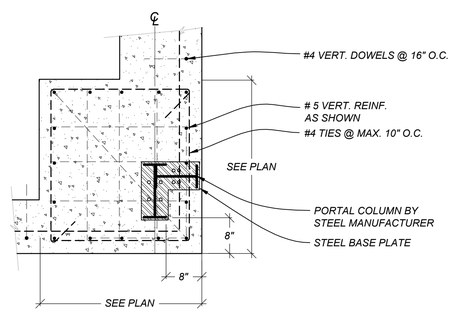

NOTE: SEE 7/S501 FOR SIMILAR NOTES

8 S501 FOUNDATION DETAIL
SCALE: ¾"=1'-0"

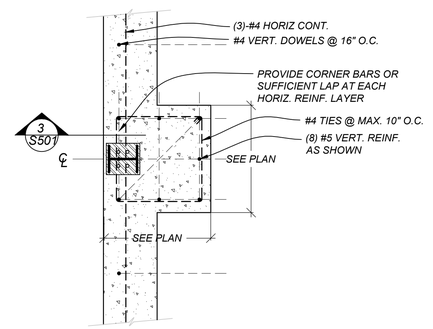

7 S501 FOUNDATION DETAIL (PLAN VIEW)
SCALE: ¾"=1'-0"

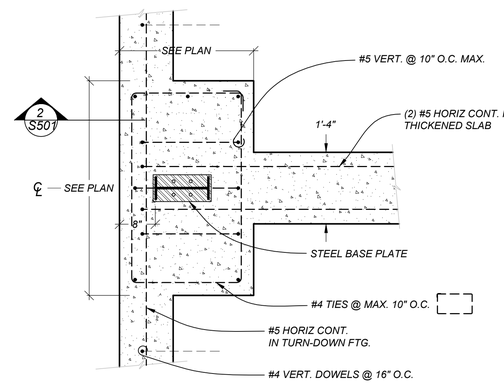

6 S501 FOUNDATION DETAIL (PLAN VIEW)
SCALE: ¾"=1'-0"

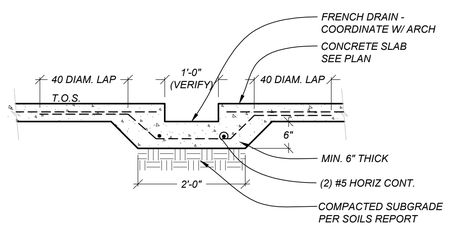

12 S501 FRENCH DRAIN DETAIL
SCALE: ¾"=1'-0"

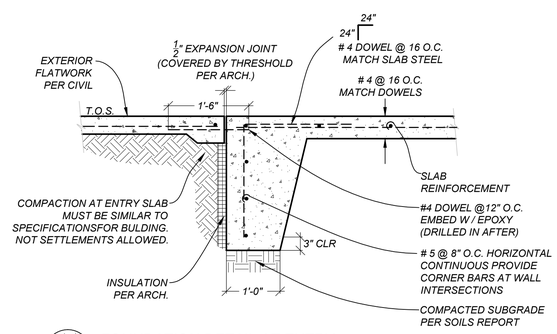

11 S501 FOUNDATION DETAIL AT ENTRY
SCALE: ¾"=1'-0"

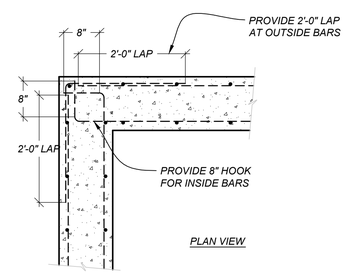

10 S501 GENERIC CONCRETE CORNER/INTERSECTION DETAIL
SCALE: ¾"=1'-0"

BAER ARCHITECTURE NM LLC

Baer Architecture NM
227 East Palace Avenue Suite C
Santa Fe, NM 87501
505.470.6835
allanbaer@comcast.net

McCLAIN + YU
ARCHITECTURE & DESIGN

McClain + Yu Architecture & Design
2009 Ridgecrest Dr SE
Albuquerque, NM 87108
505.266.2142
info@mcclain-yu.com
www.mcclain-yu.com

CONSULTANTS

WILLIAM M. DRUC
NEW MEXICO
13853
REGISTERED PROFESSIONAL ENGINEER
12-1-2017

DRUC ENGINEERING
Structural Engineers
430 Apodaca Hill
Santa Fe,
New Mexico 87501
tel 505.983.4992
fax 505.984.0792
bill@druceng.com

PROJECT

SANTA FE COUNTY
PUBLIC WORKS
DEPARTMENT
PROPERTY CONTROL
FACILITY

ADDRESS

424 NM 599
SANTA FE, NM 87507

Date	01 December, 2017
Project Number	11910
Project File	
Drawn By	JLLCC
Checked By	WMD

Copyright ©
MCCLAIN + YU ARCHITECTURE AND DESIGN

SHEET TITLE

STRUCTURAL
DETAILS

S-501

SHEET 7 OF 8

01 December, 2017

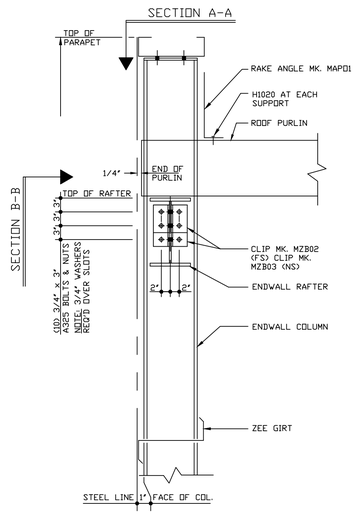

POST AND BEAM ENDWALL WITH INSET GIRTS

REFERENCE ERECTOR NOTE FOR TYPICAL WASHER REQUIREMENTS

8 / S502 ENDWALL PARAPET DETAIL (NUCOR)
NOT TO SCALE

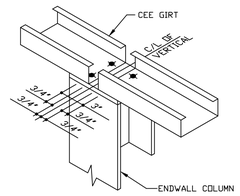

SECTION A-A
(4) 1/2"Ø x 1 1/4" A307 BOLT H0500/NUT H0400

POST AND BEAM ENDWALL WITH INSET GIRTS

4 / S502 ENDWALL PARAPET DETAIL (NUCOR)
NOT TO SCALE

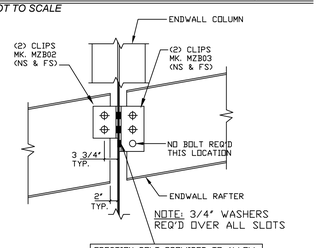

ERECTION BOLT PROVIDED TO ALLOW INDEPENDENT SETTING OF RAFTERS. NO ROOF LOADS SHALL BE APPLIED TO RAFTERS UNTIL ALL BOLTS ARE IN PLACE AND TIGHTENED.

SECTION B-B

POST AND BEAM ENDWALL WITH INSET GIRTS

7 / S502 ENDWALL PARAPET DETAIL (NUCOR)
NOT TO SCALE

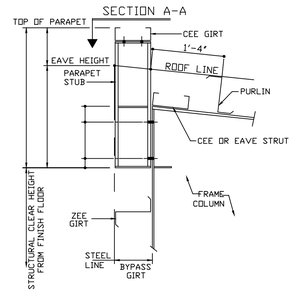

INTERMEDIATE FRAMES BYPASS GIRTS
REFERENCE ERECTOR NOTE FOR TYPICAL WASHER REQUIREMENTS

3 / S502 HIGH SIDEWALL PARAPET DETAIL (NUCOR)
NOT TO SCALE

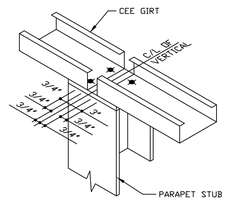

SECTION A-A
(4) 1/2"Ø x 1 1/2" A307 BOLT H0500/NUT H0400

INTERMEDIATE FRAMES BYPASS GIRTS

6 / S502 HIGH SIDEWALL PARAPET DETAIL (NUCOR)
NOT TO SCALE

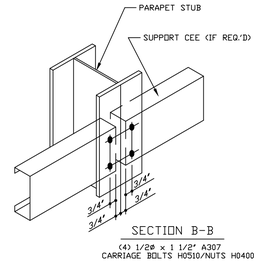

INTERMEDIATE FRAMES BYPASS GIRTS

2 / S502 LOW SIDEWALL PARAPET DETAIL (NUCOR)
NOT TO SCALE

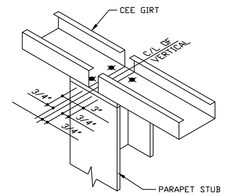

SECTION A-A
(4) 1/2"Ø x 1 1/2" A307 BOLT H0500/NUT H0400

INTERMEDIATE FRAMES BYPASS GIRTS

5 / S502 LOW SIDEWALL PARAPET DETAIL (NUCOR)
NOT TO SCALE

NOTE:
DETAILS SHOWN ARE EXAMPLES PROVIDED BY NUCOR. METAL BUILDING MANUFACTURER MAY SUBSTITUTE PROPRIETARY DETAILS FOR NUCOR DETAILS WITH PERMISSION OF ARCHITECT AND ENGINEER.

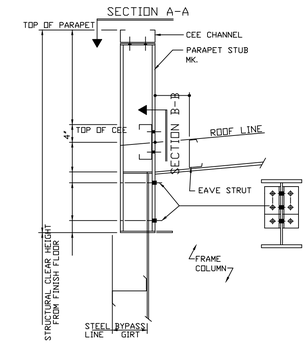

INTERMEDIATE FRAMES BYPASS GIRTS
REFERENCE ERECTOR NOTE FOR TYPICAL WASHER REQUIREMENTS

1 / S502 LOW SIDEWALL PARAPET DETAIL (NUCOR)
SCALE: 3/4"=1'-0"

LIGHT GAGE STEEL - INTERIOR/EXTERIOR WALLS

MINIMUM STUD & JOIST PROPERTIES (NET)		
MEMBER	MIN. I_x in^4	MIN. S_x in^3
6" x 1-3/8" x 20 Ga.	1.582	0.51
6" x 1-5/8" x 12 Ga.	...	...

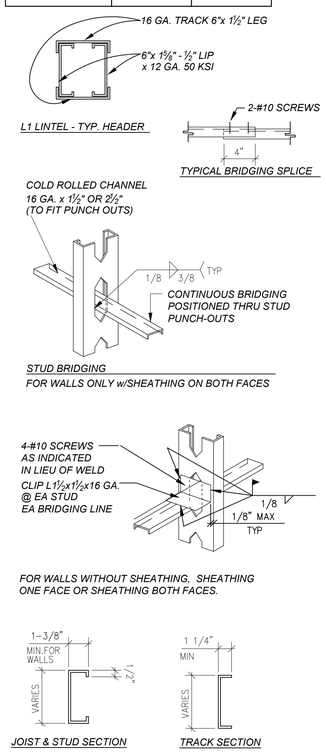

NOTES:
1. BRIDGING: CONTINUOUS THRU STUD PUNCHOUTS
A. MAXIMUM BRIDGING SPACING 4'-0" O.C. VERT.

9 / S502 LIGHT GAGE STEEL SPECIFICATION DETAILS
NOT TO SCALE

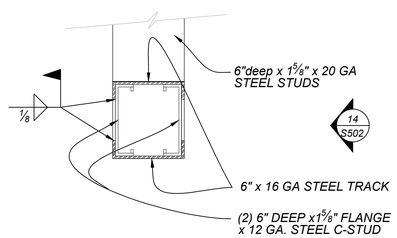

13 / S502 HEADER FRAMING SECTION
SCALE: 1 1/2"=1'-0"

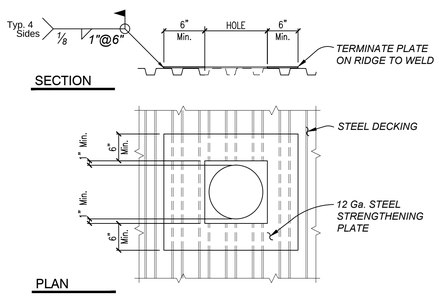

11 / S502 STEEL DECK OPENING - 4" to 12"
SCALE: 3/4"=1'-0"

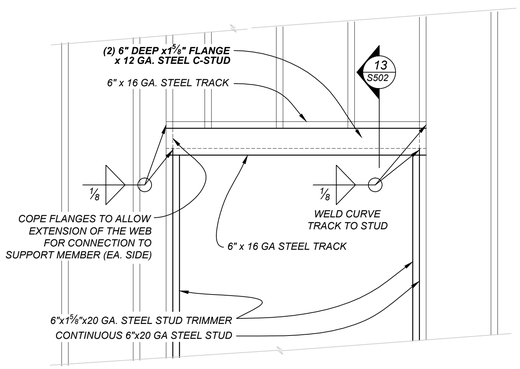

14 / S502 TYPICAL HEADER ELEVATION DETAIL
SCALE: 3/4"=1'-0"

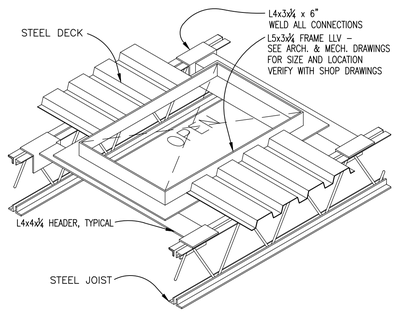

12 / S502 STEEL DECK OPENING - over 12"
NOT TO SCALE

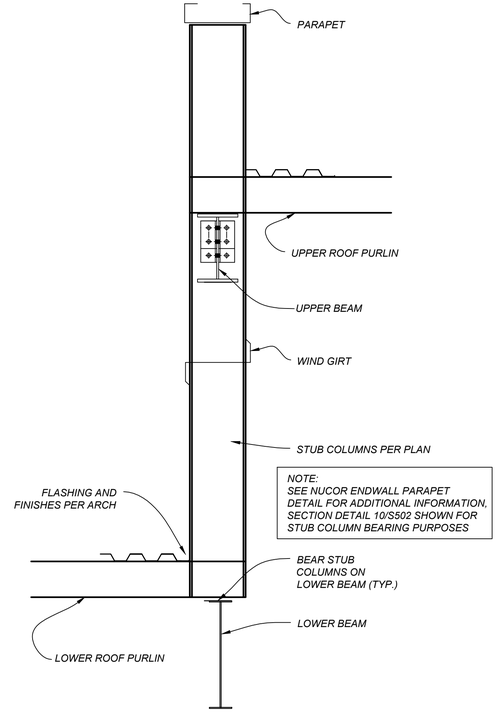

NOTE:
SEE NUCOR ENDWALL PARAPET DETAIL FOR ADDITIONAL INFORMATION, SECTION DETAIL 10/S502 SHOWN FOR STUB COLUMN BEARING PURPOSES

10 / S502 SECTION DETAIL
SCALE: 3/4"=1'-0"

BAER ARCHITECTURE NM LLC

Baer Architecture NM
227 East Palace Avenue Suite C
Santa Fe, NM 87501
505.470.6835
allanbaer@comcast.net

McCLAIN + YU ARCHITECTURE & DESIGN

McClain + Yu Architecture & Design
2009 Ridgecrest Dr SE
Albuquerque, NM 87108
505.266.2142
info@mcclain-yu.com
www.mcclain-yu.com

CONSULTANTS

WILLIAM M. DRUC NEW MEXICO 13853 REGISTERED PROFESSIONAL ENGINEER 12.1.2017

DRUC ENGINEERING
Structural Engineers
430 Apodaca Hill
Santa Fe,
New Mexico 87501
tel 505.983.4992
fax 505.984.0792
bill@druceng.com

PROJECT

SANTA FE COUNTY PUBLIC WORKS DEPARTMENT PROPERTY CONTROL FACILITY

ADDRESS

424 NM 599
SANTA FE, NM 87507

Date	01 December, 2017
Project Number	11910
Project File	
Drawn By	JLLCC
Checked By	WMD

Copyright ©
MCCLAIN + YU ARCHITECTURE AND DESIGN

SHEET TITLE

STRUCTURAL DETAILS

S-502

SHEET 8 OF 8

01 December, 2017

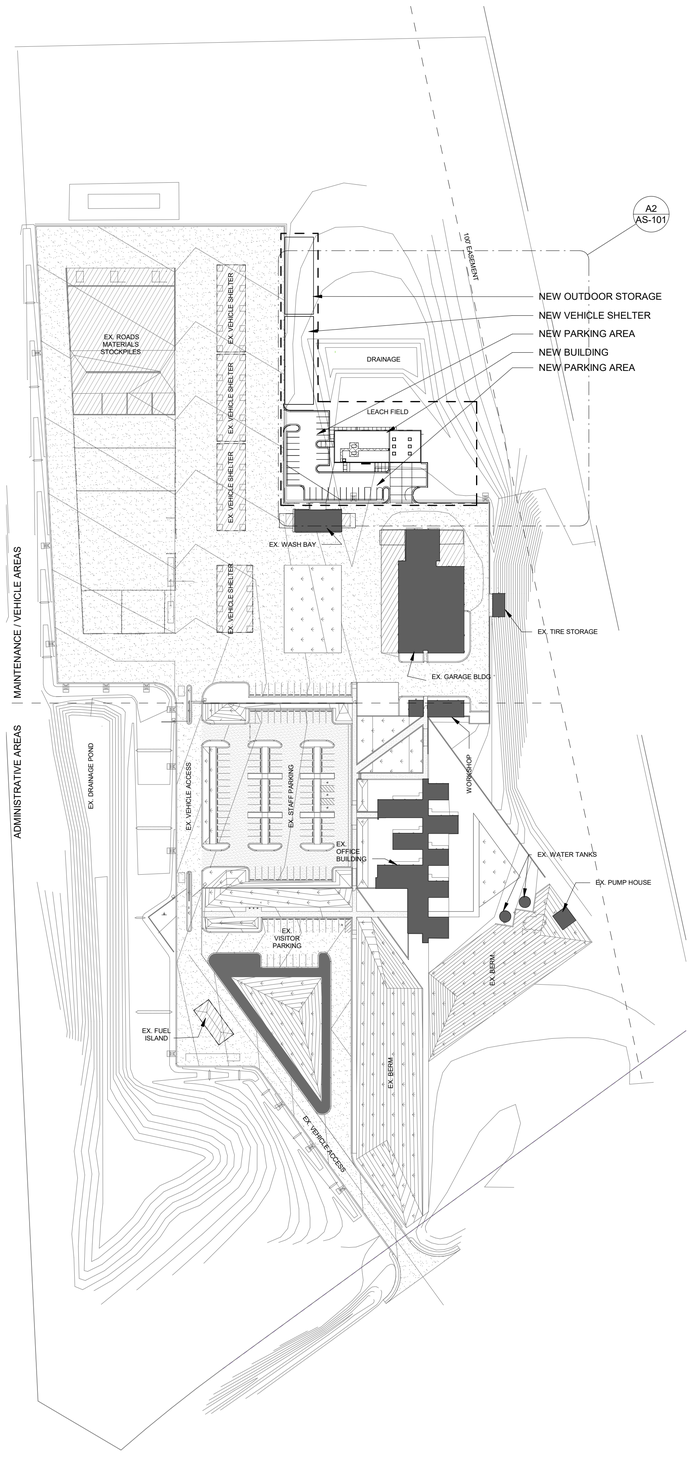

1 PUBLIC WORKS CAMPUS SITE PLAN
1" = 100'-0"

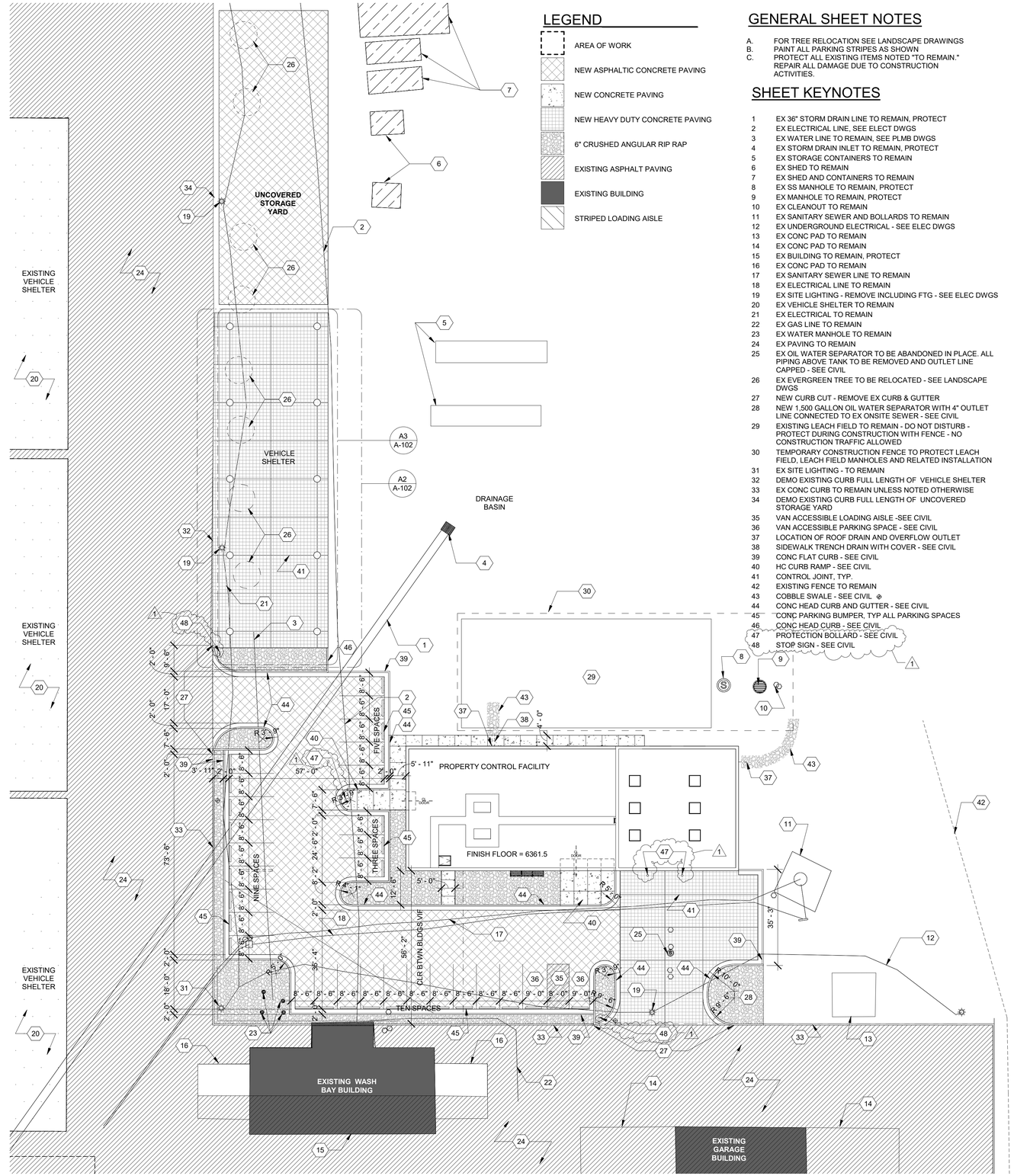

A2 SITE PLAN
1" = 20'-0"

LEGEND

- AREA OF WORK
- NEW ASPHALTIC CONCRETE PAVING
- NEW CONCRETE PAVING
- NEW HEAVY DUTY CONCRETE PAVING
- 6" CRUSHED ANGULAR RIP RAP
- EXISTING ASPHALT PAVING
- EXISTING BUILDING
- STRIPED LOADING AISLE

GENERAL SHEET NOTES

A. FOR TREE RELOCATION SEE LANDSCAPE DRAWINGS
B. PAINT ALL PARKING STRIPES AS SHOWN
C. PROTECT ALL EXISTING ITEMS NOTED "TO REMAIN." REPAIR ALL DAMAGE DUE TO CONSTRUCTION ACTIVITIES.

SHEET KEYNOTES

1 EX 36" STORM DRAIN LINE TO REMAIN, PROTECT
2 EX ELECTRICAL LINE, SEE ELECT DWGS
3 EX WATER LINE TO REMAIN, SEE PLMB DWGS
4 EX STORM DRAIN INLET TO REMAIN, PROTECT
5 EX STORAGE CONTAINERS TO REMAIN
6 EX SHED TO REMAIN
7 EX SHED AND CONTAINERS TO REMAIN
8 EX SS MANHOLE TO REMAIN, PROTECT
9 EX MANHOLE TO REMAIN, PROTECT
10 EX CLEANOUT TO REMAIN
11 EX SANITARY SEWER AND BOLLARDS TO REMAIN
12 EX UNDERGROUND ELECTRICAL - SEE ELEC DWGS
13 EX CONC PAD TO REMAIN
14 EX CONC PAD TO REMAIN
15 EX BUILDING TO REMAIN, PROTECT
16 EX CONC PAD TO REMAIN
17 EX SANITARY SEWER LINE TO REMAIN
18 EX ELECTRICAL LINE TO REMAIN
19 EX SITE LIGHTING - REMOVE INCLUDING FTG - SEE ELEC DWGS
20 EX VEHICLE SHELTER TO REMAIN
21 EX ELECTRICAL TO REMAIN
22 EX GAS LINE TO REMAIN
23 EX WATER MANHOLE TO REMAIN
24 EX PAVING TO REMAIN
25 EX OIL WATER SEPARATOR TO BE ABANDONED IN PLACE. ALL PIPING ABOVE TANK TO BE REMOVED AND OUTLET LINE CAPPED - SEE CIVIL
26 EX EVERGREEN TREE TO BE RELOCATED - SEE LANDSCAPE DWGS
27 NEW CURB CUT - REMOVE EX CURB & GUTTER
28 NEW 1,500 GALLON OIL WATER SEPARATOR WITH 4" OUTLET LINE CONNECTED TO EX ONSITE SEWER - SEE CIVIL
29 EXISTING LEACH FIELD TO REMAIN - DO NOT DISTURB - PROTECT DURING CONSTRUCTION WITH FENCE - NO CONSTRUCTION TRAFFIC ALLOWED
30 TEMPORARY CONSTRUCTION FENCE TO PROTECT LEACH FIELD, LEACH FIELD MANHOLES AND RELATED INSTALLATION
31 EX SITE LIGHTING - TO REMAIN
32 DEMO EXISTING CURB FULL LENGTH OF VEHICLE SHELTER
33 EX CONC CURB TO REMAIN UNLESS NOTED OTHERWISE
34 DEMO EXISTING CURB FULL LENGTH OF UNCOVERED STORAGE YARD
35 VAN ACCESSIBLE LOADING AISLE -SEE CIVIL
36 VAN ACCESSIBLE PARKING SPACE - SEE CIVIL
37 LOCATION OF ROOF DRAIN AND OVERFLOW OUTLET
38 SIDEWALK TRENCH DRAIN WITH COVER - SEE CIVIL
39 CONC FLAT CURB - SEE CIVIL
40 HC CURB RAMP - SEE CIVIL
41 CONTROL JOINT, TYP.
42 EXISTING FENCE TO REMAIN
43 COBBLE SWALE - SEE CIVIL
44 CONC HEAD CURB AND GUTTER - SEE CIVIL
45 CONC PARKING BUMPER, TYP ALL PARKING SPACES
46 CONC HEAD CURB - SEE CIVIL
47 PROTECTION BOLLARD - SEE CIVIL
48 STOP SIGN - SEE CIVIL

BAER ARCHITECTURE NM LLC

Baer Architecture NM
227 East Palace Avenue Suite C
Santa Fe, NM 87501
505.470.6835
allanbaer@comcast.net

McCLAIN + YU
ARCHITECTURE & DESIGN

McClain + Yu Architecture & Design
2009 Ridgecrest Dr SE
Albuquerque, NM 87108
505.266.2142
info@mcclain-yu.com
www.mcclain-yu.com

CONSULTANTS

STATE OF NEW MEXICO ALLAN T. BAER NO. 2991 REGISTERED ARCHITECT
12/01/2017

STATE OF NEW MEXICO RAIMUNDO McCLAIN No. 004757 REGISTERED ARCHITECT
DEC 1, 2017

PROJECT

SANTA FE COUNTY PUBLIC WORKS DEPARTMENT PROPERTY CONTROL FACILITY

ADDRESS

424 NM 599
SANTA FE, NM 87507

REVISIONS

8-30-2018	1	REVISED CID SET

Date	DECEMBER 1, 2017
Project Number	2016-051
Project File	
Drawn By	Author
Checked By	Checker

Copyright ©
MCCLAIN + YU ARCHITECTURE AND DESIGN

SHEET TITLE

SITE PLAN

SHEET AS-101 OF

8/31/2018 11:42:33 AM C:\Users\sam\Documents\SFC-PCD_samT6RWC.rvt

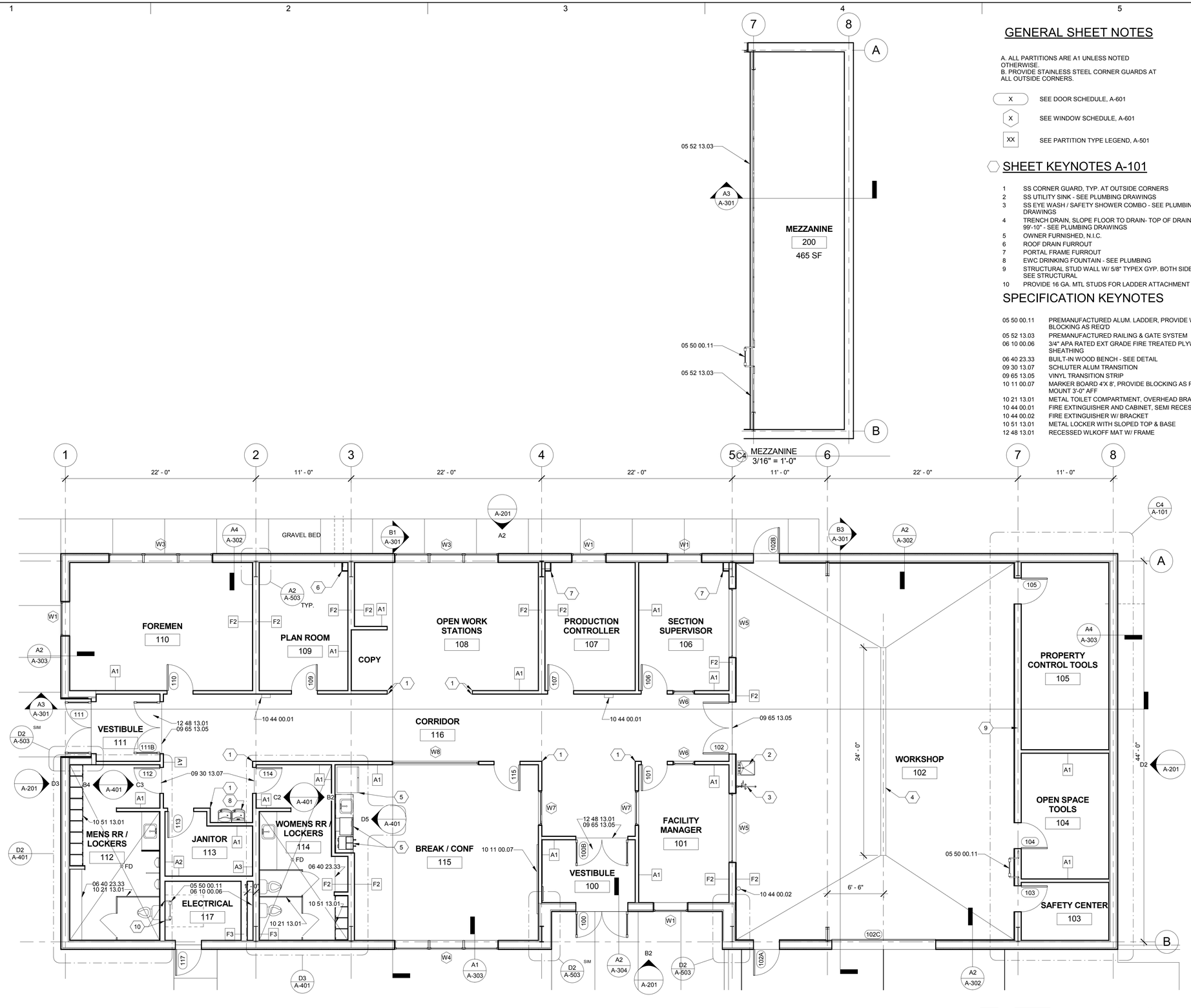

A1 BUILDING PLAN
3/16" = 1'-0"

GENERAL SHEET NOTES

A. ALL PARTITIONS ARE A1 UNLESS NOTED OTHERWISE.
B. PROVIDE STAINLESS STEEL CORNER GUARDS AT ALL OUTSIDE CORNERS.

X — SEE DOOR SCHEDULE, A-601

X — SEE WINDOW SCHEDULE, A-601

XX — SEE PARTITION TYPE LEGEND, A-501

SHEET KEYNOTES A-101

1 SS CORNER GUARD, TYP. AT OUTSIDE CORNERS
2 SS UTILITY SINK - SEE PLUMBING DRAWINGS
3 SS EYE WASH / SAFETY SHOWER COMBO - SEE PLUMBING DRAWINGS
4 TRENCH DRAIN, SLOPE FLOOR TO DRAIN- TOP OF DRAIN @ 99'-10" - SEE PLUMBING DRAWINGS
5 OWNER FURNISHED, N.I.C.
6 ROOF DRAIN FURROUT
7 PORTAL FRAME FURROUT
8 EWC DRINKING FOUNTAIN - SEE PLUMBING
9 STRUCTURAL STUD WALL W/ 5/8" TYPEX GYP. BOTH SIDES - SEE STRUCTURAL
10 PROVIDE 16 GA. MTL STUDS FOR LADDER ATTACHMENT

SPECIFICATION KEYNOTES

05 50 00.11 PREMANUFACTURED ALUM. LADDER, PROVIDE WALL BLOCKING AS REQ'D
05 52 13.03 PREMANUFACTURED RAILING & GATE SYSTEM
06 10 00.06 3/4" APA RATED EXT GRADE FIRE TREATED PLYWOOD SHEATHING
06 40 23.33 BUILT-IN WOOD BENCH - SEE DETAIL
09 30 13.07 SCHLUTER ALUM TRANSITION
09 65 13.05 VINYL TRANSITION STRIP
10 11 00.07 MARKER BOARD 4'X 8', PROVIDE BLOCKING AS REQ'D, MOUNT 3'-0" AFF
10 21 13.01 METAL TOILET COMPARTMENT, OVERHEAD BRACED
10 44 00.01 FIRE EXTINGUISHER AND CABINET, SEMI RECESSED
10 44 00.02 FIRE EXTINGUISHER W/ BRACKET
10 51 13.01 METAL LOCKER WITH SLOPED TOP & BASE
12 48 13.01 RECESSED WLKOFF MAT W/ FRAME

BAER ARCHITECTURE NM LLC

Baer Architecture NM
227 East Palace Avenue Suite C
Santa Fe, NM 87501
505.470.6835
allanbaer@comcast.net

McCLAIN + YU
ARCHITECTURE & DESIGN

McClain + Yu Architecture & Design
2009 Ridgecrest Dr SE
Albuquerque, NM 87108
505.266.2142
info@mcclain-yu.com
www.mcclain-yu.com

CONSULTANTS

STATE OF NEW MEXICO
ALLAN T. BAER
NO. 2991
REGISTERED ARCHITECT
12/01/2017

STATE OF NEW MEXICO
RAIMUNDO MCCLAIN
No. 004757
REGISTERED ARCHITECT
DEC 1, 2017

PROJECT

SANTA FE COUNTY PUBLIC WORKS DEPARTMENT PROPERTY CONTROL FACILITY

ADDRESS

424 NM 599
SANTA FE, NM 87507

Date	DECEMBER 1, 2017
Project Number	0
Project File	
Drawn By	Author
Checked By	Checker

Copyright ©
MCCLAIN + YU ARCHITECTURE AND DESIGN

SHEET TITLE

FLOOR PLAN

SHEET A-101 OF

3/27/2018 2:01:54 PM C:\Users\keith\Documents\SFC-PCD_Rachel.rvt

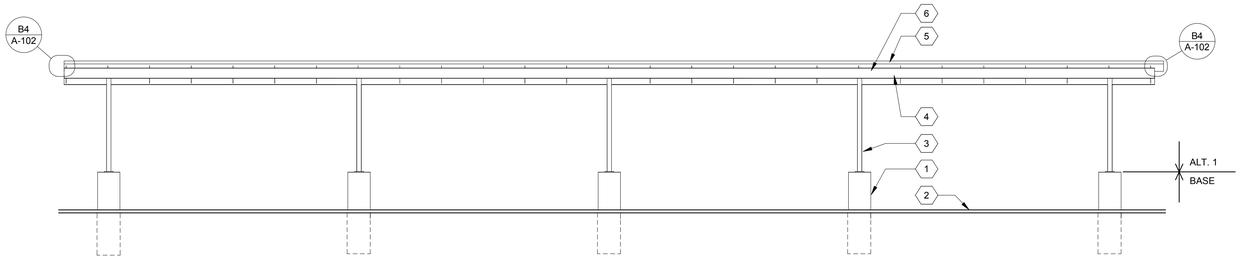

D2 ELEVATION
1/8" = 1'-0"

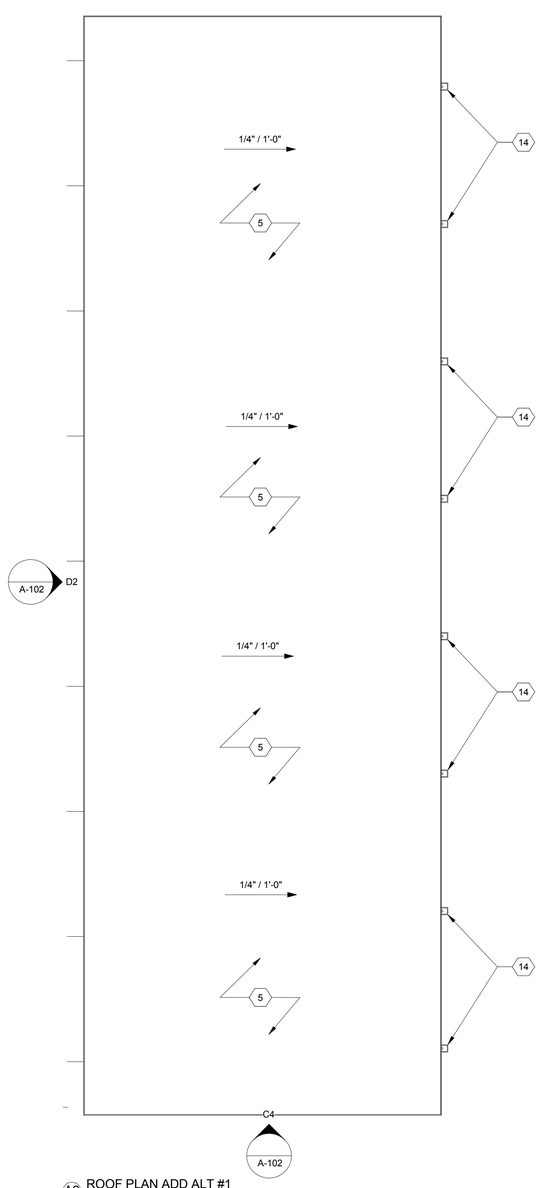

A2 ROOF PLAN ADD ALT #1
1/8" = 1'-0"

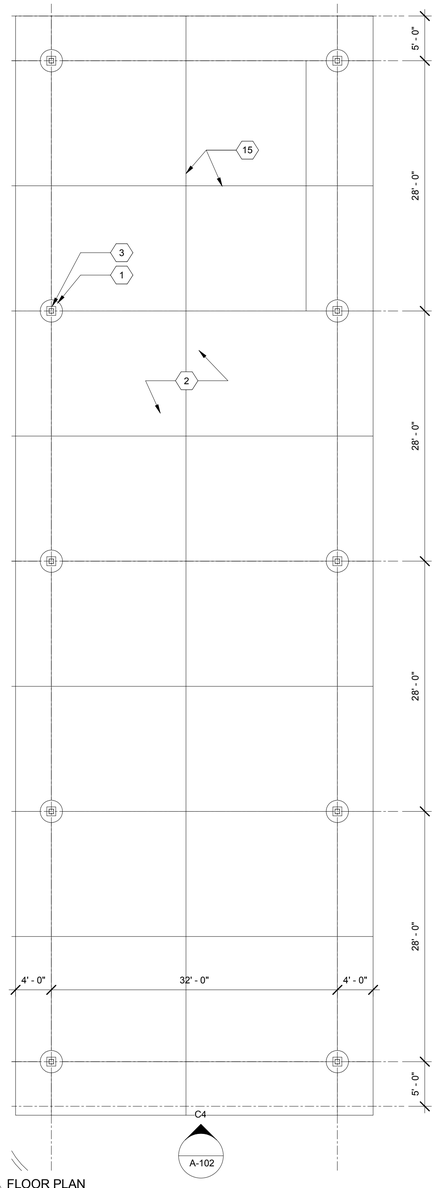

A3 FLOOR PLAN
1/8" = 1'-0"

GENERAL SHEET NOTES

1. FOR VEHICLE SHELTER ITEMS SHOWN ON THIS SHEET: INCLUDE CONCRETE PAVING, RETAINING, SLABS, FOOTINGS, FOUNDATIONS AND ANCHOR PLATES IN BASE BID; PROVISION OF ALL OTHER PORTIONS OF VEHICLE SHELTER ARE TO BE INCLUDED IN ADDITIVE ALTERNATE NO. 1

SHEET KEYNOTES A-102

1	CONCRETE PIER, TYP - SEE STRUCTURAL DRAWINGS - BASE BID
2	SLOPED, REINFORCED HEAVY DUTY CONCRETE PAVING- SEE CIVIL DRAWINGS - BASE BID
3	TUBE STEEL COLUMN- SEE STRUCTURAL DRAWINGS - ADD ALT #1
4	STEEL BAR JOISTS- SEE STRUCTURAL DRAWINGS - ADD ALT #1
5	CAP SHEET ROOF OVER ROOF DECK - SEE ARCH DETAIL & STRUCTURAL DRAWINGS - ADD ALT #1
6	STL BEAM - SEE STRUCTURAL DRAWINGS - ADD ALT #1
7	24 GA. GRAVEL STOP
8	CAP SHEET
9	BASE SHEET
10	1/2" PROTECTION BOARD
11	ROOF DECK - SEE STRUCTURAL DRAWINGS - ADD ALT #1
12	24 GA. CONTINUOUS CLEAT
13	DECK EDGE ANGLE - SEE STRUCTURAL DRAWINGS - ADD ALT #1
14	24 GA. SHT MTL SCUPPER
15	EXPANSION JOINT, TYP.

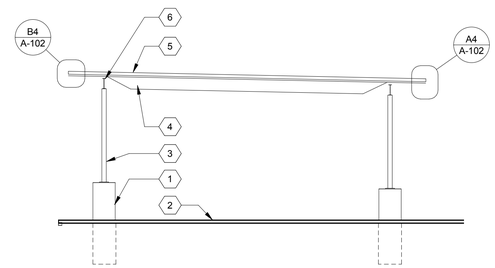

C4 ELEVATION
1/8" = 1'-0"

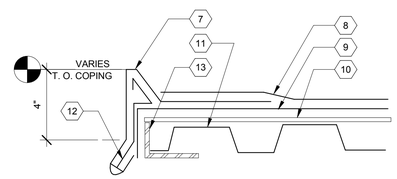

B4 GRAVELSTOP FLASHING
3" = 1'-0"

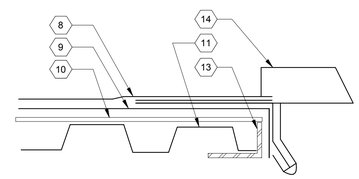

A4 GRAVELSTOP FLASHING/SCUPPER
3" = 1'-0"

BAER ARCHITECTURE NM LLC

Baer Architecture NM
227 East Palace Avenue Suite C
Santa Fe, NM 87501
505.470.6835
allanbaer@comcast.net

McCLAIN + YU
ARCHITECTURE & DESIGN

McClain + Yu Architecture & Design
2009 Ridgecrest Dr SE
Albuquerque, NM 87108
505.266.2142
info@mcclain-yu.com
www.mcclain-yu.com

CONSULTANTS

STATE OF NEW MEXICO
ALLAN T. BAER
NO. 2991
REGISTERED ARCHITECT
12/01/2017

STATE OF NEW MEXICO
RAIMUNDO MCCLAIN
No. 004757
REGISTERED ARCHITECT
DEC 1, 2017

PROJECT

SANTA FE COUNTY PUBLIC WORKS DEPARTMENT PROPERTY CONTROL FACILITY

ADDRESS

424 NM 599
SANTA FE, NM 87507

Date	DECEMBER 1, 2017
Project Number	0
Project File	
Drawn By	Author
Checked By	Checker

Copyright ©
MCCLAIN + YU ARCHITECTURE AND DESIGN

SHEET TITLE

VEHICLE SHELTER

A-102

SHEET OF

3/27/2018 2:01:55 PM C:\Users\keith\Documents\SFC-PCD_Rachel.rvt

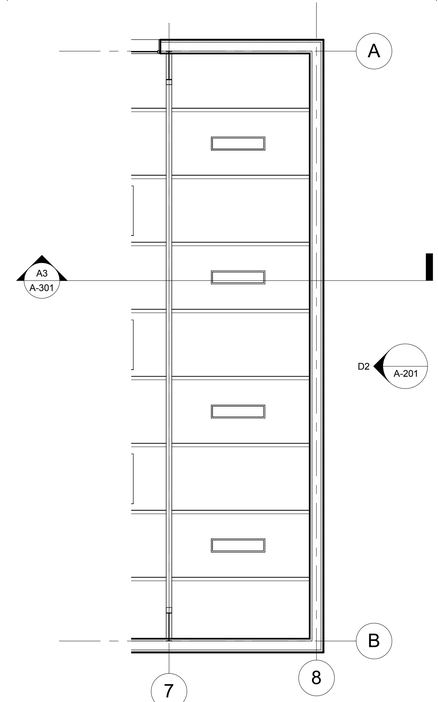

C4 RCP - MEZZANINE
3/16" = 1'-0"

GENERAL SHEET NOTES

REFLECTED CEILING LEGEND

CEILINGS

- C1 — 2' X 2' ACOUSTICAL CEILING TILE - SEE ROOM FINISH LEGEND FOR DESCRIPTION
- C2 — GYPSUM BOARD CEILING - SEE ROOM FINISH LEGEND FOR DESCRIPTION
- C3 — EXPOSED CEILING STRUCTURE, PAINT
- C4 — EXT LINEAR MTL SOFFITT

LIGHTING SEE - ELECTRICAL

- RECESSED CAN LIGHT
- 1X4' CHAIN HUNG SHOP LIGHT
- 2' X 2' RECESSED FIXTURE
- 2' X 4' RECESSED OR LAY IN FIXTURE

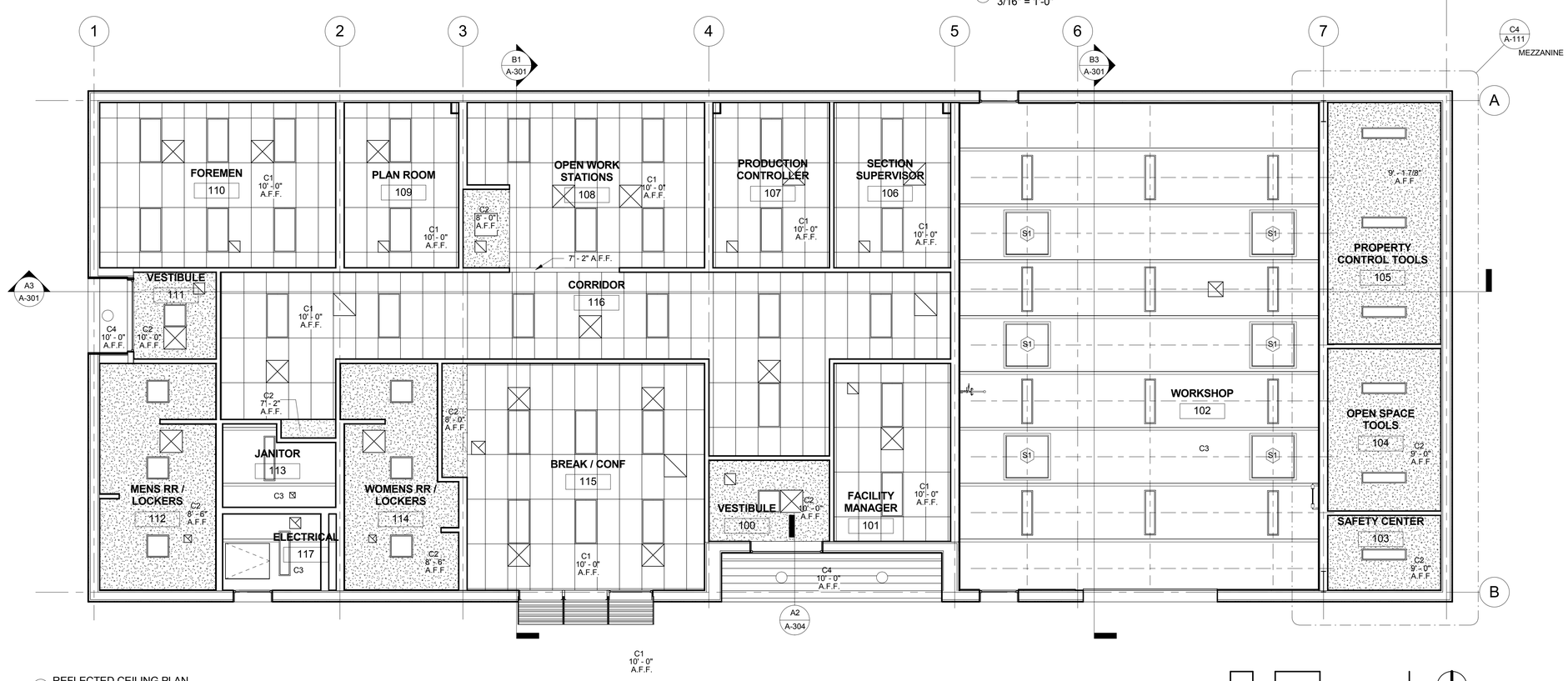

A2 REFLECTED CEILING PLAN
3/16" = 1'-0"

0' 2' 4' 8' 16'

BAER ARCHITECTURE NM LLC

Baer Architecture NM
227 East Palace Avenue Suite C
Santa Fe, NM 87501
505.470.6835
allanbaer@comcast.net

McCLAIN + YU
ARCHITECTURE & DESIGN

McClain + Yu Architecture & Design
2009 Ridgecrest Dr SE
Albuquerque, NM 87108
505.266.2142
info@mcclain-yu.com
www.mcclain-yu.com

CONSULTANTS

STATE OF NEW MEXICO
ALLAN T. BAER
NO. 2991
REGISTERED ARCHITECT
12/01/2017

STATE OF NEW MEXICO
RAIMUNDO MCCLAIN
No. 004757
REGISTERED ARCHITECT
DEC 1, 2017

PROJECT

SANTA FE COUNTY PUBLIC WORKS DEPARTMENT PROPERTY CONTROL FACILITY

ADDRESS

424 NM 599
SANTA FE, NM 87507

Date	DECEMBER 1, 2017
Project Number	0
Project File	
Drawn By	Author
Checked By	Checker

Copyright ©
MCCLAIN + YU ARCHITECTURE AND DESIGN

SHEET TITLE

REFLECTED CEILING PLAN

A-111

SHEET OF

3/27/2018 2:01:56 PM C:\Users\keith\Documents\SFC-PCD_Rachel.rvt

GENERAL SHEET NOTES

A. SLOPE ROOF A MINIMUM OF 1/4" PER 1'-0"

SHEET KEYNOTES - A-121

1 ROOF ACCESS HATCH - LOCATE BETWEEN PURLINS
2 ROOF DRAIN & OVERFLOW - SEE PLUMBING
3 UNIT SKYLIGHT - SEE SCHEDULE
4 ROOF TOP UNIT - SEE MECHANICAL DRAWINGS
5 PROVIDE CRICKETS AT ALL LARGE ROOF PENETRATIONS, TYP.
6 ROOF PURLIN BELOW, TYP.

SPECIFICATION KEYNOTES

05 50 00.11	PREMANUFACTURED ALUM. LADDER, PROVIDE WALL BLOCKING AS REQ'D
07 54 23.01	TPO ROOFING SYSTEM, ADHERED
07 54 23.08	WALK PAD
07 62 00.03	PREFABRICATED METAL PARAPET CAP, KYNAR FINISH, COLOR BY ARCHITECT
07 72 00.01	ROOF HATCH 30"x36"
07 72 00.03	LADDER UP SAFETY POST
07 72 00.04	ROOF HATCH SAFETY RAILING

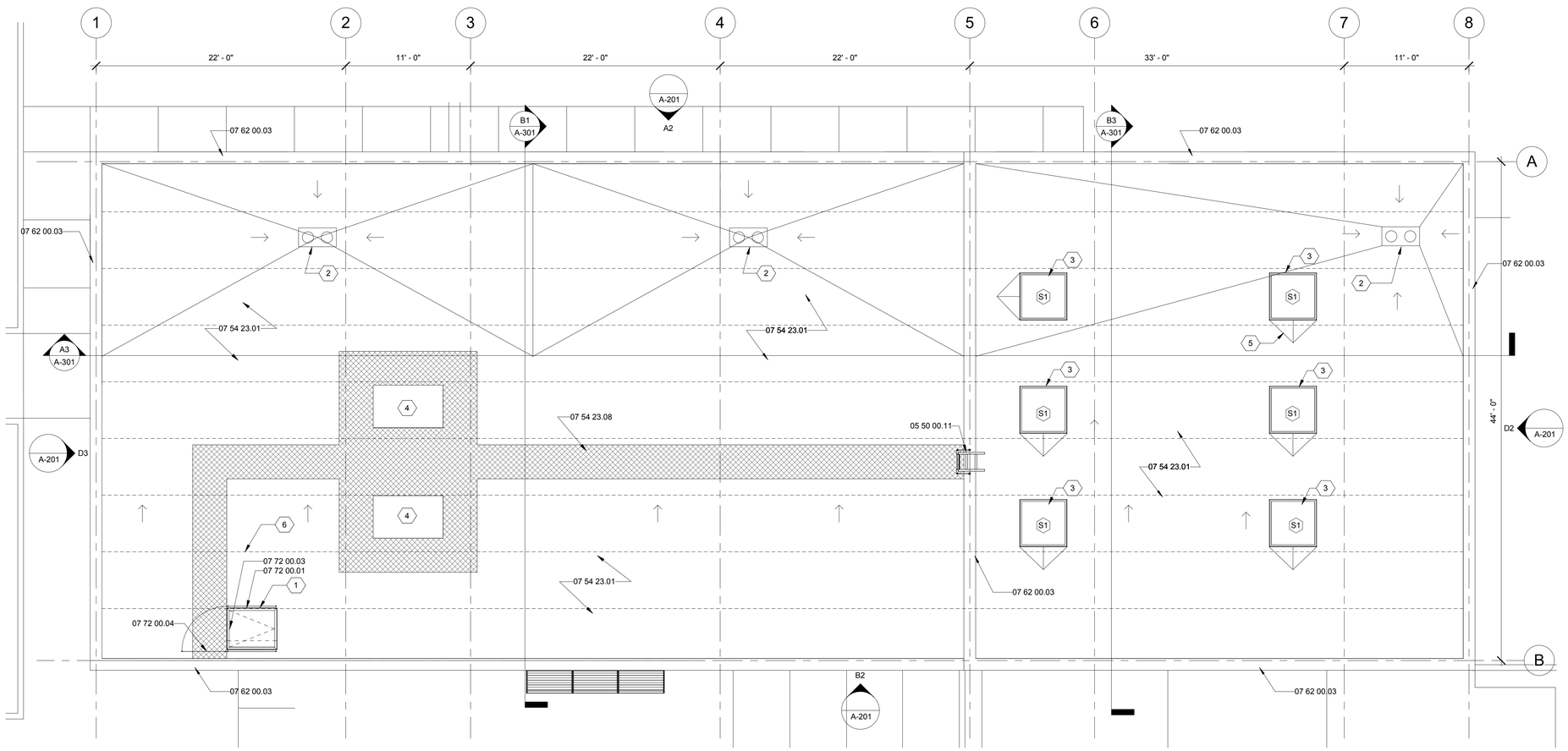

A1 ROOF PLAN
3/16" = 1'-0"

BAER ARCHITECTURE NM LLC

Baer Architecture NM
227 East Palace Avenue Suite C
Santa Fe, NM 87501
505.470.6835
allanbaer@comcast.net

McCLAIN + YU ARCHITECTURE & DESIGN

McClain + Yu Architecture & Design
2009 Ridgecrest Dr SE
Albuquerque, NM 87108
505.266.2142
info@mcclain-yu.com
www.mcclain-yu.com

CONSULTANTS

STATE OF NEW MEXICO ALLAN T. BAER NO. 2991 REGISTERED ARCHITECT
12/01/2017

STATE OF NEW MEXICO RAIMUNDO MCCLAIN No. 004757 REGISTERED ARCHITECT
DEC 1, 2017

PROJECT

SANTA FE COUNTY PUBLIC WORKS DEPARTMENT PROPERTY CONTROL FACILITY

ADDRESS

424 NM 599
SANTA FE, NM 87507

Date	DECEMBER 1, 2017
Project Number	0
Project File	
Drawn By	Author
Checked By	Checker

Copyright ©
MCCLAIN + YU ARCHITECTURE AND DESIGN

SHEET TITLE

ROOF PLAN

A-121
SHEET OF

C:\Users\keith\Documents\SFC-PCD_Rachel.rvt
3/27/2018 2:01:57 PM

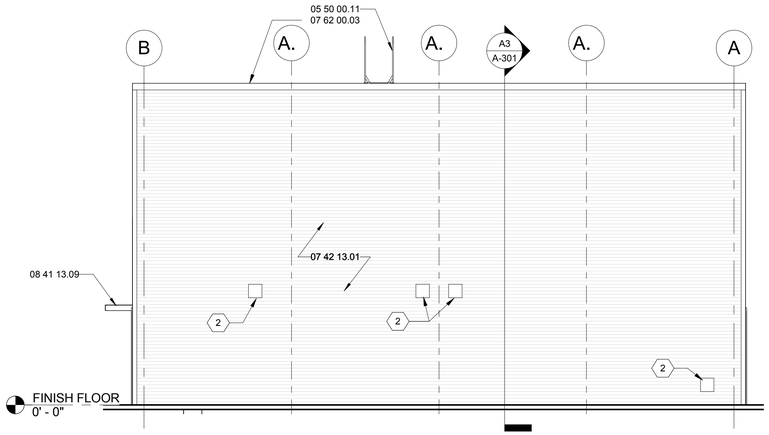

D2 EAST ELEVATION
3/16" = 1'-0"

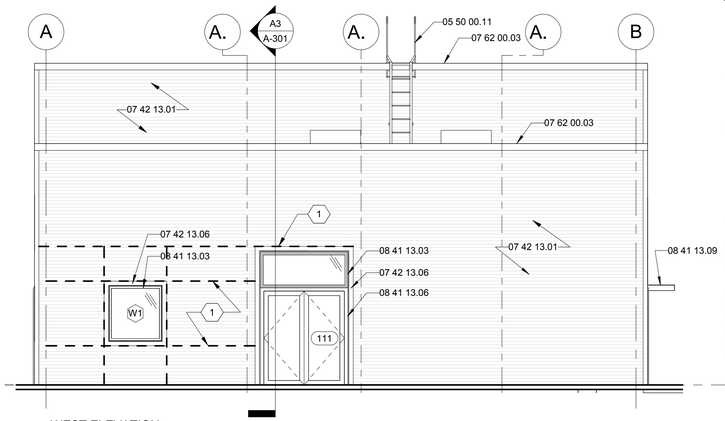

D3 WEST ELEVATION
3/16" = 1'-0"

GENERAL SHEET NOTES

SHEET KEYNOTES - A-201

1 METAL BLDG HEADER/SILL GIRTS & JAMB CEE AS REQ'D FOR DOORS & WINDOWS. SEE STRUCTURAL - TYPICAL

2 MECHANICAL LOUVER - SEE MECHANICAL

SPECIFICATION KEYNOTES

05 50 00.11	PREMANUFACTURED ALUM. LADDER, PROVIDE WALL BLOCKING AS REQ'D
07 42 13.01	METAL WALL PANEL SYSTEM
07 42 13.06	METAL PANEL SYSTEM, TYPICAL CLOSURE
07 62 00.03	PREFABRICATED METAL PARAPET CAP, KYNAR FINISH, COLOR BY ARCHITECT
08 11 13.04	EXT INSUL HOLLOW METAL DOOR
08 11 13.07	HOLLOW METAL WINDOW FRAME
08 33 23.01	INS OVERHEAD COILING DOOR
08 41 13.03	ALUM STOREFRONT WINDOW - FIXED
08 41 13.06	ALUMINUM STOREFRONT DOOR
08 41 13.09	ALUM STOREFRONT EXT. INTEGRAL SHADING DEVICE AND INT LIGHT SHELF

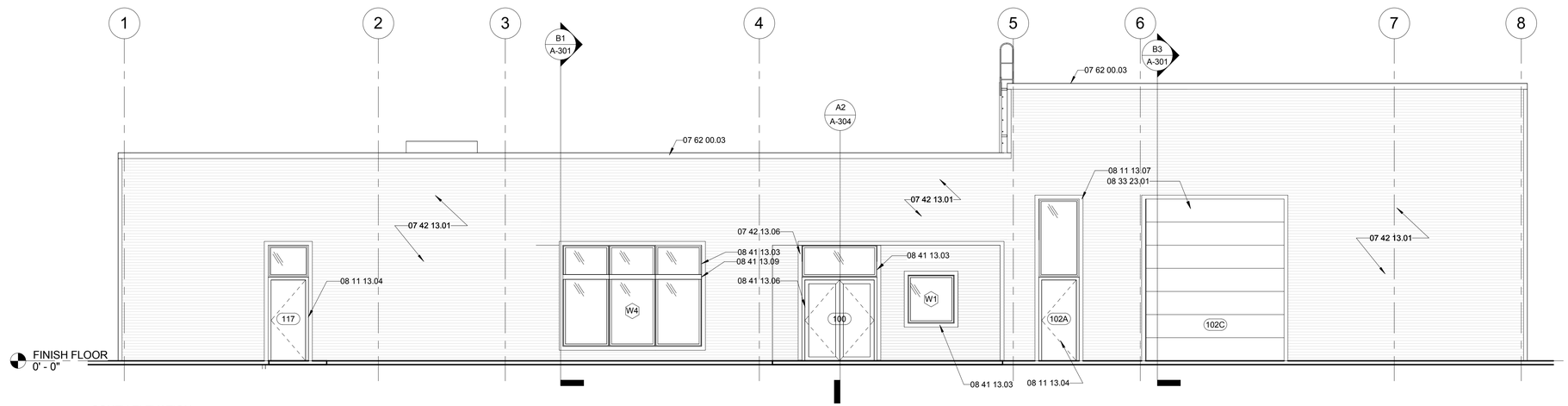

B2 SOUTH ELEVATION
3/16" = 1'-0"

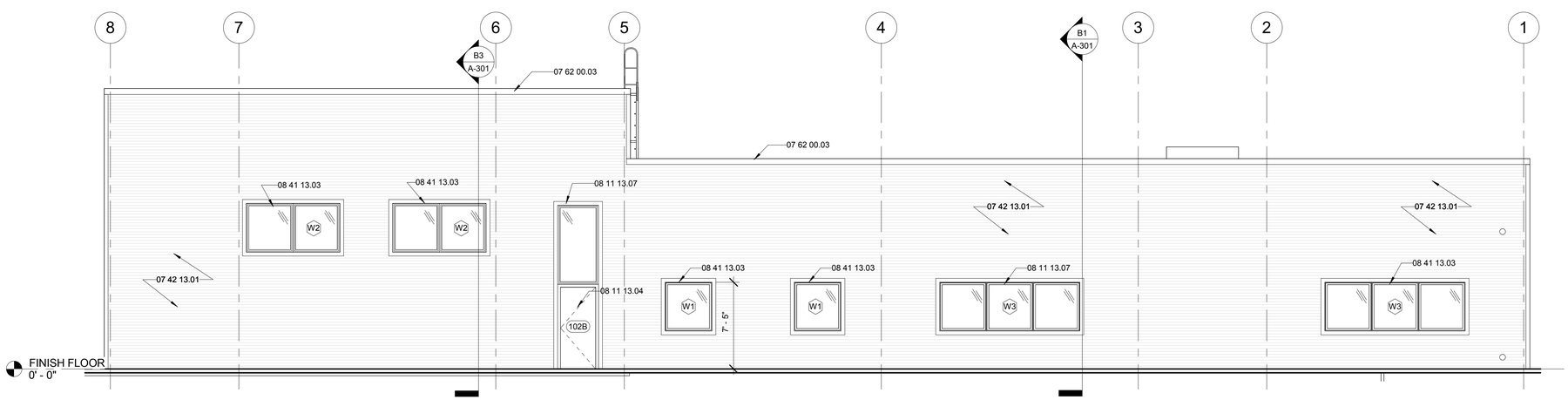

A2 NORTH ELEVATION
3/16" = 1'-0"

BAER ARCHITECTURE NM LLC

Baer Architecture NM
227 East Palace Avenue Suite C
Santa Fe, NM 87501
505.470.6835
allanbaer@comcast.net

McCLAIN + YU
ARCHITECTURE & DESIGN

McClain + Yu Architecture & Design
2009 Ridgecrest Dr SE
Albuquerque, NM 87108
505.266.2142
info@mcclain-yu.com
www.mcclain-yu.com

CONSULTANTS

STATE OF NEW MEXICO
ALLAN T. BAER
NO. 2991
REGISTERED ARCHITECT
12/01/2017

STATE OF NEW MEXICO
RAIMUNDO MCCLAIN
No. 004757
REGISTERED ARCHITECT
DEC 1, 2017

PROJECT

SANTA FE COUNTY PUBLIC WORKS DEPARTMENT PROPERTY CONTROL FACILITY

ADDRESS

424 NM 599
SANTA FE, NM 87507

Date	DECEMBER 1, 2017
Project Number	0
Project File	
Drawn By	Author
Checked By	Checker

Copyright ©
MCCLAIN + YU ARCHITECTURE AND DESIGN

SHEET TITLE

ELEVATIONS

A-201

SHEET OF

3/27/2018 2:01:59 PM C:\Users\keith\Documents\SFC-PCD_Rachel.rvt

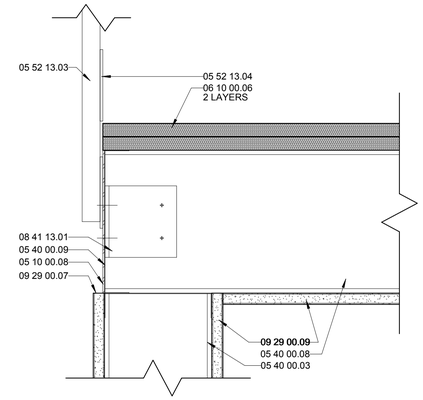

C3 MEZZANINE EDGE DETAIL
3" = 1'-0"

GENERAL SHEET NOTES

SHEET KEYNOTES - A-301

1 TRENCH DRAIN, SLOPE FLOOR TO DRAIN - SEE PLUMBING DRAWINGS

SPECIFICATION KEYNOTES

05 10 00.08	STEEL PLATE - SEE STRUCTURAL
05 30 00.01	STEEL DECKING - 1 1/2"
05 40 00.03	6" METAL STUDS - SEE STRUCTURAL
05 40 00.08	8" METAL JOIST SEE STRUCTURAL
05 40 00.09	16 GA TRACK
05 50 00.11	PREMANUFACTURED ALUM. LADDER, PROVIDE WALL BLOCKING AS REQ'D
05 52 13.03	PREMANUFACTURED RAILING & GATE SYSTEM
05 52 13.04	4" TOE BOARD, TYP.
06 10 00.06	3/4" APA RATED EXT GRADE FIRE TREATED PLYWOOD SHEATHING
06 10 00.09	3/4" APA RATED SHEATHING C-D EXT. GRADE
07 54 23.01	TPO ROOFING SYSTEM, ADHERED
07 54 23.05	RECOVERY BOARD PER MANUF REQ'S
07 54 23.06	POLYISCOCYANURATE INSUL
08 41 13.01	ALUM STOREFRONT SYSTEM
08 41 13.09	ALUM STOREFRONT EXT. INTEGRAL SHADING DEVICE AND INT LIGHT SHELF
08 62 00.01	UNIT SKYLIGHT
09 29 00.07	J TERMINATION
09 29 00.09	5/8" TYPE 'X' GYPSUM BOARD - SEE PARTITION TYPES
13 34 19.02	ROOF PURLIN, PAINT ALL EXPOSED SURFACES
13 34 19.04	VINYL FACED INSULATION
13 34 19.06	RIGID FRAME RAFTER, PAINT ALL EXPOSED SURFACES

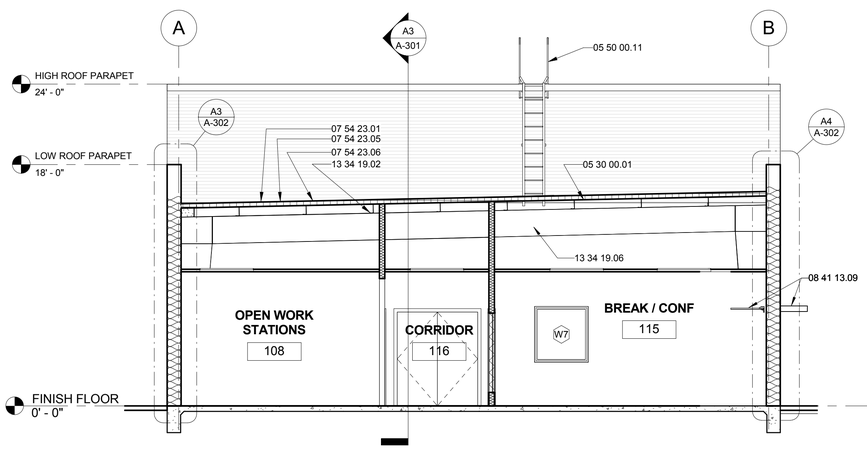

B1 BUILDING SECTION
3/16" = 1'-0"

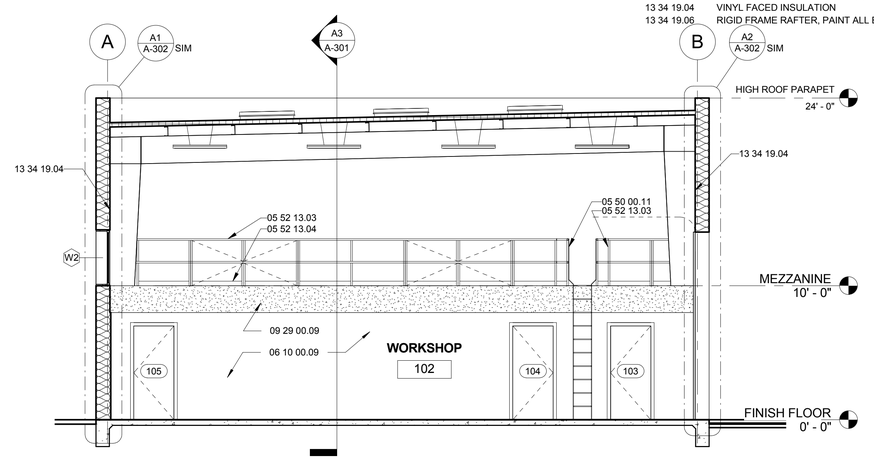

B3 BUILDING SECTION
3/16" = 1'-0"

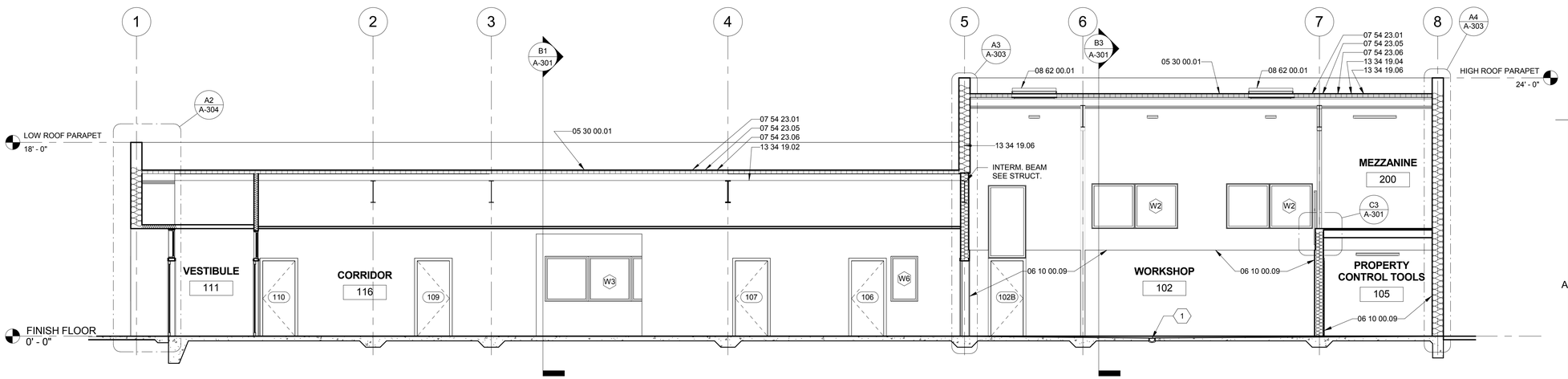

A3 BUILDING SECTION
3/16" = 1'-0"

BAER ARCHITECTURE NM LLC

Baer Architecture NM
227 East Palace Avenue Suite C
Santa Fe, NM 87501
505.470.6835
allanbaer@comcast.net

McCLAIN + YU
ARCHITECTURE & DESIGN

McClain + Yu Architecture & Design
2009 Ridgecrest Dr SE
Albuquerque, NM 87108
505.266.2142
info@mcclain-yu.com
www.mcclain-yu.com

CONSULTANTS

STATE OF NEW MEXICO
ALLAN T. BAER
NO. 2991
REGISTERED ARCHITECT
12/01/2017

STATE OF NEW MEXICO
RAIMUNDO MCCLAIN
No. 004757
REGISTERED ARCHITECT
DEC 1, 2017

PROJECT

SANTA FE COUNTY PUBLIC WORKS DEPARTMENT PROPERTY CONTROL FACILITY

ADDRESS

424 NM 599
SANTA FE, NM 87507

Date	DECEMBER 1, 2017
Project Number	0
Project File	
Drawn By	Author
Checked By	Checker

Copyright ©
MCCLAIN + YU ARCHITECTURE AND DESIGN

SHEET TITLE

SECTIONS

A-301

SHEET OF

3/27/2018 2:02:00 PM C:\Users\keith\Documents\SFC-PCD_Rachel.rvt

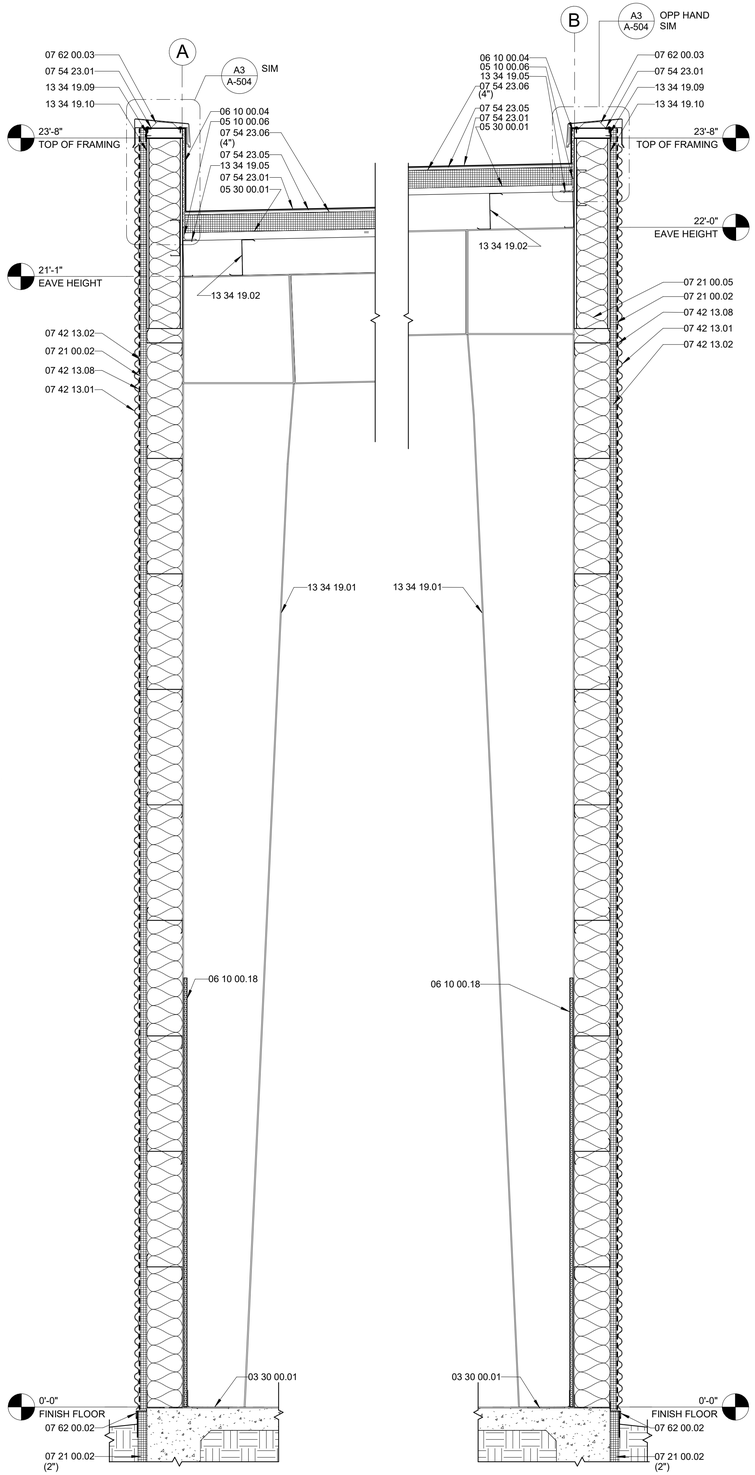

A1 WALL SECTION
3/4" = 1'-0"

A2 WALL SECTION
3/4" = 1'-0"

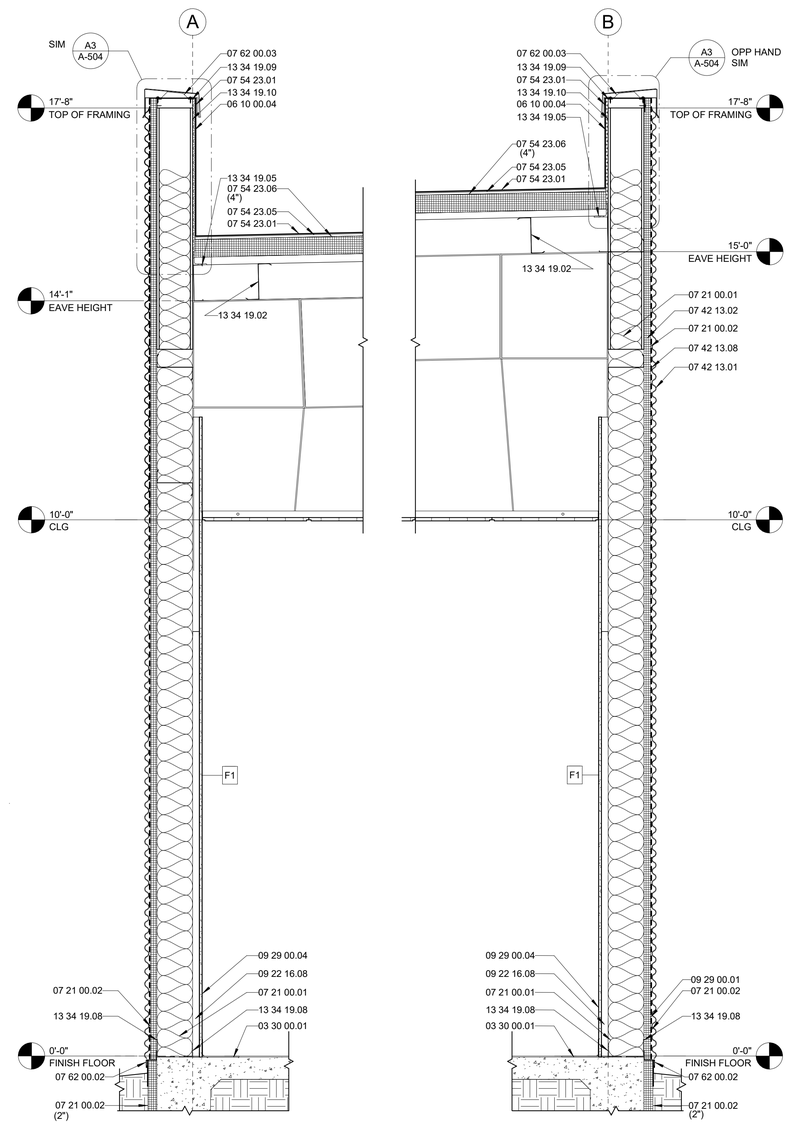

A3 WALL SECTION
3/4" = 1'-0"

A4 WALL SECTION
3/4" = 1'-0"

GENERAL SHEET NOTES

SPECIFICATION KEYNOTES

03 30 00.01	CONC SLAB
05 10 00.06	DECK EDGE ANGLE - SEE STRUCTURAL
05 30 00.01	STEEL DECKING - 1 1/2"
06 10 00.04	1/2" APA RATED EXT GRADE FIRE TREATED PLYWOOD SHEATHING
06 10 00.18	3/4" FIRE TREATED PLYWOOD GRADE C|D
07 21 00.01	FIBERGLASS BATT WALL INSULATION W/ FSK
07 21 00.02	EXTRUDED POLYSTYRENE RIGID INSULATION
07 21 00.05	FIBERGLASS BATT WALL INSULATION, UNFACED
07 42 13.01	METAL WALL PANEL SYSTEM
07 42 13.02	METAL WALL PANEL "Z" FURRING, 16 GAUGE @16" O.C.
07 42 13.08	BUILDING WRAP
07 54 23.01	TPO ROOFING SYSTEM, ADHERED
07 54 23.05	RECOVERY BOARD PER MANUF REQ'S
07 54 23.06	POLYISCOCYANURATE INSUL
07 62 00.02	METAL FLASHING
07 62 00.03	PREFABRICATED METAL PARAPET CAP, KYNAR FINISH, COLOR BY ARCHITECT
09 22 16.08	FURRING CHANNEL
09 29 00.01	1/2" DENS-GLASS EXT SHEATHING
09 29 00.04	GYPSUM BOARD - SEE PARTITION TYPES
13 34 19.01	RIGID FRAME COLUMN
13 34 19.02	ROOF PURLIN
13 34 19.05	EAVE STRUT
13 34 19.08	BASE ANGLE
13 34 19.09	CEE CHANNEL
13 34 19.10	PARAPET STUB

BAER ARCHITECTURE NM LLC

Baer Architecture NM
227 East Palace Avenue Suite C
Santa Fe, NM 87501
505.470.6835
allanbaer@comcast.net

McCLAIN + YU
ARCHITECTURE & DESIGN

McClain + Yu Architecture & Design
2009 Ridgecrest Dr SE
Albuquerque, NM 87108
505.266.2142
info@mcclain-yu.com
www.mcclain-yu.com

CONSULTANTS

STATE OF NEW MEXICO
ALLAN T. BAER
NO. 2991
REGISTERED ARCHITECT
12/01/2017

STATE OF NEW MEXICO
RAIMUNDA MCCLAIN
No. 004757
REGISTERED ARCHITECT
DEC 1, 2017

PROJECT

SANTA FE COUNTY PUBLIC WORKS DEPARTMENT PROPERTY CONTROL FACILITY

ADDRESS

424 NM 599
SANTA FE, NM 87507

Date	DECEMBER 1, 2017
Project Number	2016-051
Project File	
Drawn By	Author
Checked By	Checker

Copyright ©
MCCLAIN + YU ARCHITECTURE AND DESIGN

SHEET TITLE

WALL SECTIONS

A-302

SHEET OF

8/31/2018 11:42:31 AM C:\Users\sam\Documents\SFC-PCD_samT6RWC.rvt

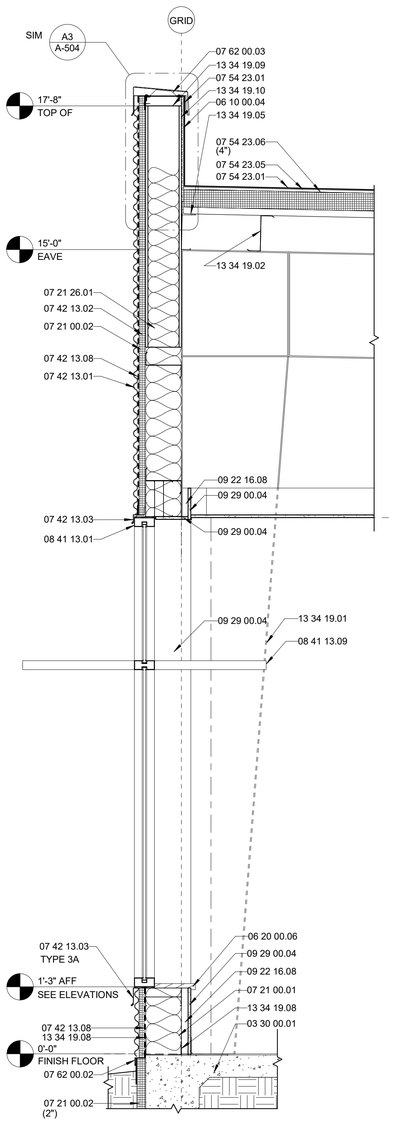

A1 WALL SECTION
3/4" = 1'-0"

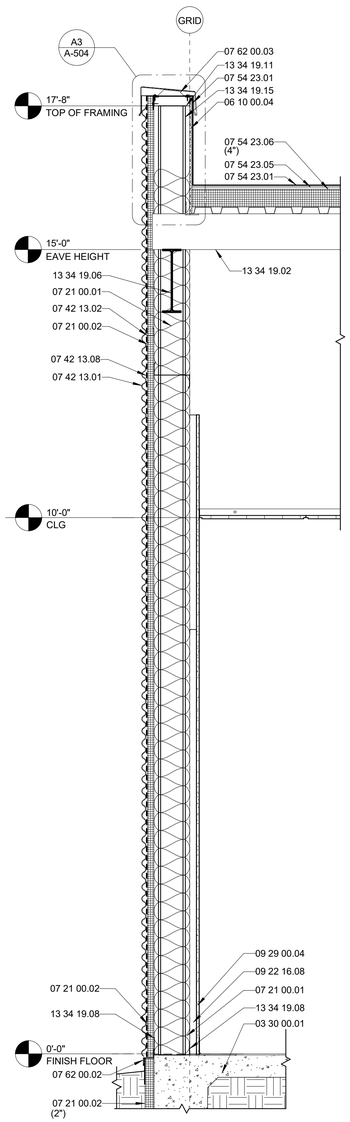

A2 WALL SECTION
3/4" = 1'-0"

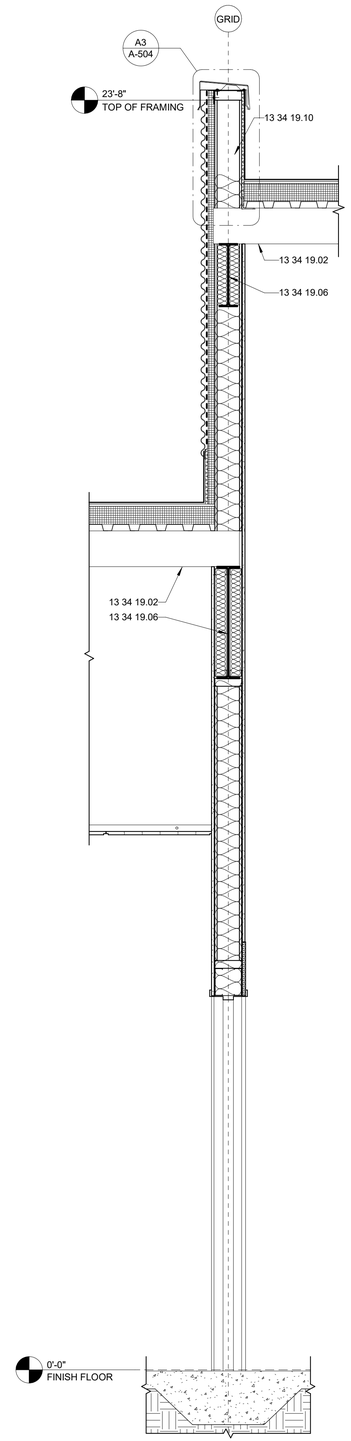

A3 WALL SECTION
3/4" = 1'-0"

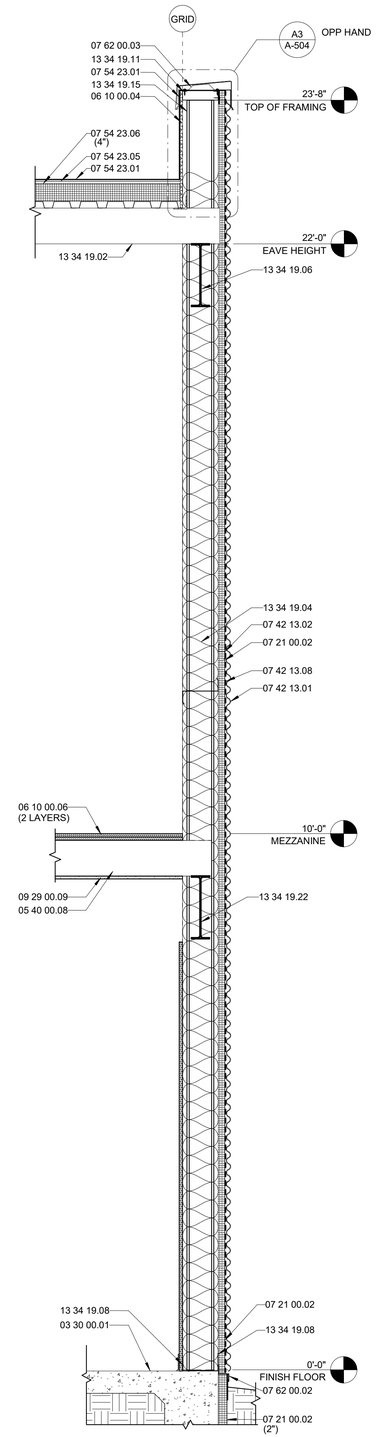

A4 WALL SECTION
3/4" = 1'-0"

GENERAL SHEET NOTES

REFERENCE KEYNOTES

03 30 00.01	CONC SLAB
05 40 00.08	8" METAL JOIST SEE STRUCTURAL
06 10 00.04	1/2" APA RATED EXT GRADE FIRE TREATED PLYWOOD SHEATHING
06 10 00.06	3/4" APA RATED EXT GRADE FIRE TREATED PLYWOOD SHEATHING
06 20 00.06	WOOD SILL
07 21 00.01	FIBERGLASS BATT WALL INSULATION W/ FSK
07 21 00.02	EXTRUDED POLYSTYRENE RIGID INSULATION
07 21 26.01	CELLULOSE BLOWN IN INSULATION
07 42 13.01	METAL WALL PANEL SYSTEM
07 42 13.02	METAL WALL PANEL "Z" FURRING, 16 GAUGE @16" O.C.
07 42 13.03	METAL PANEL SYSTEM DRIP EDGE FLASHING
07 42 13.08	BUILDING WRAP
07 54 23.01	TPO ROOFING SYSTEM, ADHERED
07 54 23.05	RECOVERY BOARD PER MANUF REQ'S
07 54 23.06	POLYISCOCYANURATE INSUL
07 62 00.02	METAL FLASHING
07 62 00.03	PREFABRICATED METAL PARAPET CAP, KYNAR FINISH, COLOR BY ARCHITECT
08 41 13.01	ALUM STOREFRONT SYSTEM
08 41 13.09	ALUM STOREFRONT EXT. INTEGRAL SHADING DEVICE AND INT LIGHT SHELF
09 22 16.08	FURRING CHANNEL
09 29 00.04	GYPSUM BOARD - SEE PARTITION TYPES
09 29 00.09	5/8" TYPE 'X' GYPSUM BOARD - SEE PARTITION TYPES
13 34 19.01	RIGID FRAME COLUMN
13 34 19.02	ROOF PURLIN
13 34 19.04	VINYL FACED INSULATION
13 34 19.05	EAVE STRUT
13 34 19.06	RIGID FRAME RAFTER
13 34 19.08	BASE ANGLE
13 34 19.09	CEE CHANNEL
13 34 19.10	PARAPET STUB
13 34 19.11	CEE GIRT
13 34 19.15	ENDWALL COLUMN
13 34 19.22	STL SUPPORT BEAM FOR JOIST BY METAL BLDG MFG - SEE STRUCTURAL

BAER ARCHITECTURE NM LLC

Baer Architecture NM
227 East Palace Avenue Suite C
Santa Fe, NM 87501
505.470.6835
allanbaer@comcast.net

McCLAIN + YU
ARCHITECTURE & DESIGN

McClain + Yu Architecture & Design
2009 Ridgecrest Dr SE
Albuquerque, NM 87108
505.266.2142
info@mcclain-yu.com
www.mcclain-yu.com

CONSULTANTS

STATE OF NEW MEXICO
ALLAN T. BAER
NO. 2991
REGISTERED ARCHITECT
12/01/2017

STATE OF NEW MEXICO
RAIMUNDO McCLAIN
No. 004757
REGISTERED ARCHITECT
DEC 1, 2017

PROJECT

SANTA FE COUNTY PUBLIC WORKS DEPARTMENT PROPERTY CONTROL FACILITY

ADDRESS

424 NM 599
SANTA FE, NM 87507

Date	DECEMBER 1, 2017
Project Number	2016-051
Project File	
Drawn By	Author
Checked By	Checker

Copyright ©
MCCLAIN + YU ARCHITECTURE AND DESIGN

SHEET TITLE

WALL SECTIONS

A-303

SHEET OF

8/31/2018 11:42:32 AM C:\Users\sam\Documents\SFC-PCD_samT6RWC.rvt

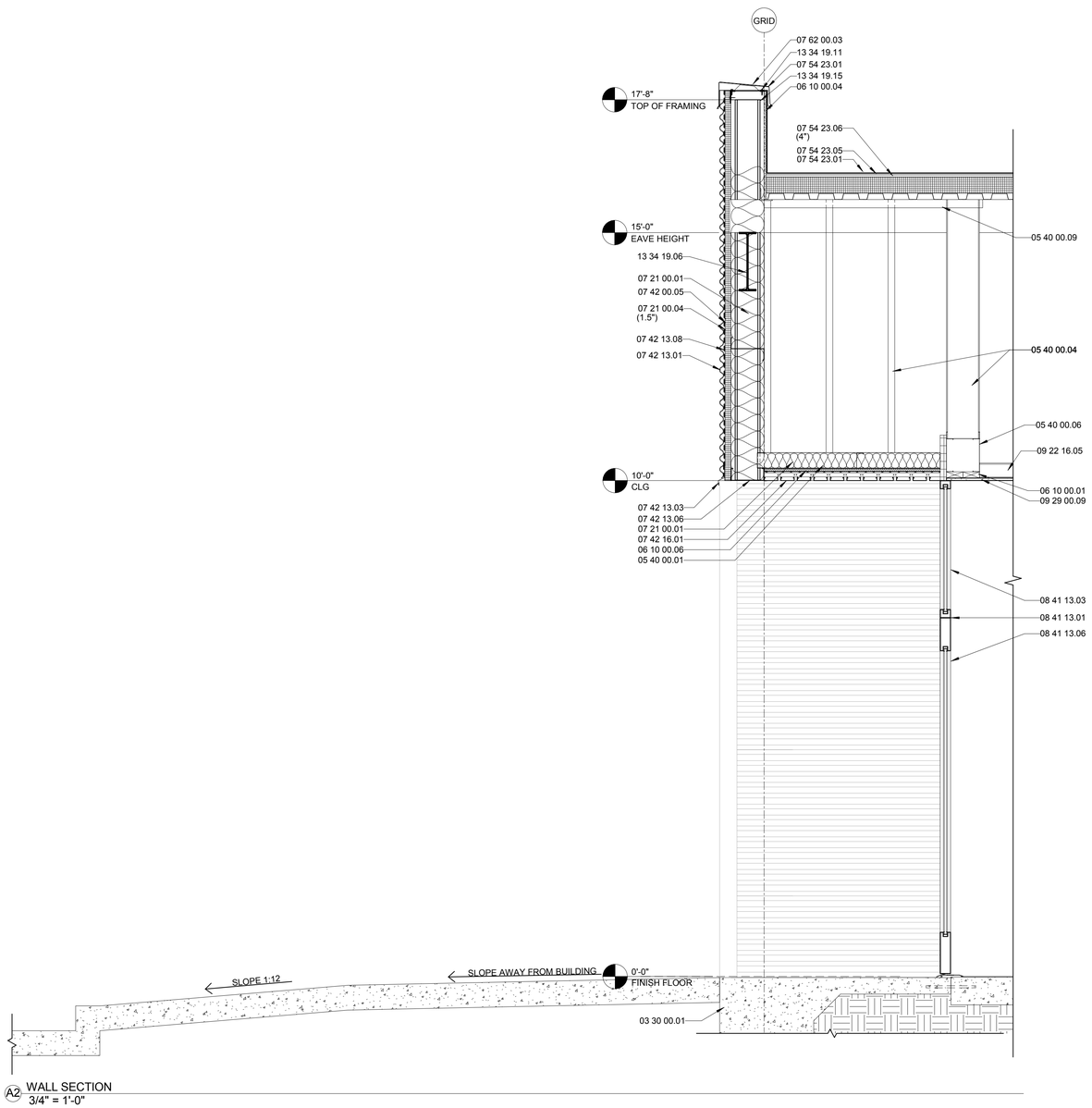

A2 WALL SECTION
3/4" = 1'-0"

GENERAL SHEET NOTES

SPECIFICATION KEYNOTES

03 30 00.01	CONC SLAB
05 40 00.01	3 5/8" METAL STUDS - SEE STRUCTURAL
05 40 00.04	8" METAL STUDS - SEE STRUCTURAL
05 40 00.06	BOX HEADER,TYP - SEE STRUCTURAL
05 40 00.09	16 GA TRACK
06 10 00.01	WOOD BLOCKING AS REQUIRED
06 10 00.04	1/2" APA RATED EXT GRADE FIRE TREATED PLYWOOD SHEATHING
06 10 00.06	3/4" APA RATED EXT GRADE FIRE TREATED PLYWOOD SHEATHING
07 21 00.01	FIBERGLASS BATT WALL INSULATION W/ FSK
07 21 00.04	POLYISCOCYANURATE INSUL
07 42 00.05	WALL PANEL ALUMINUM "Z" CHANNEL
07 42 13.01	METAL WALL PANEL SYSTEM
07 42 13.03	METAL PANEL SYSTEM DRIP EDGE FLASHING
07 42 13.06	METAL PANEL SYSTEM, TYPICAL CLOSURE
07 42 13.08	BUILDING WRAP
07 42 16.01	EXTERIOR METAL SOFFIT SYSTEM
07 54 23.01	TPO ROOFING SYSTEM, ADHERED
07 54 23.05	RECOVERY BOARD PER MANUF REQ'S
07 54 23.06	POLYISCOCYANURATE INSUL
07 62 00.03	PREFABRICATED METAL PARAPET CAP, KYNAR FINISH, COLOR BY ARCHITECT
08 41 13.01	ALUM STOREFRONT SYSTEM
08 41 13.03	ALUM STOREFRONT WINDOW - FIXED
08 41 13.06	ALUMINUM STOREFRONT DOOR
09 22 16.05	3 5/8"x20 GA METAL STUDS
09 29 00.09	5/8" TYPE 'X' GYPSUM BOARD - SEE PARTITION TYPES
13 34 19.06	RIGID FRAME RAFTER, PAINT ALL EXPOSED SURFACES
13 34 19.11	CEE GIRT
13 34 19.15	ENDWALL COLUMN

BAER ARCHITECTURE NM LLC

Baer Architecture NM
227 East Palace Avenue Suite C
Santa Fe, NM 87501
505.470.6835
allanbaer@comcast.net

McCLAIN + YU
ARCHITECTURE & DESIGN

McClain + Yu Architecture & Design
2009 Ridgecrest Dr SE
Albuquerque, NM 87108
505.266.2142
info@mcclain-yu.com
www.mcclain-yu.com

CONSULTANTS

STATE OF NEW MEXICO
ALLAN T. BAER
NO. 2991
REGISTERED ARCHITECT
Allan T. Baer
12/01/2017

STATE OF NEW MEXICO
RAIMUNDO MCCLAIN
No. 004757
REGISTERED ARCHITECT
DEC 1, 2017

PROJECT

SANTA FE COUNTY PUBLIC WORKS DEPARTMENT PROPERTY CONTROL FACILITY

ADDRESS

424 NM 599
SANTA FE, NM 87507

Date	DECEMBER 1, 2017
Project Number	0
Project File	
Drawn By	Author
Checked By	Checker

Copyright ©
MCCLAIN + YU ARCHITECTURE AND DESIGN

SHEET TITLE

WALL SECTIONS

A-304

SHEET OF

3/27/2018 2:02:04 PM C:\Users\keith\Documents\SFC-PCD_Rachel.rvt

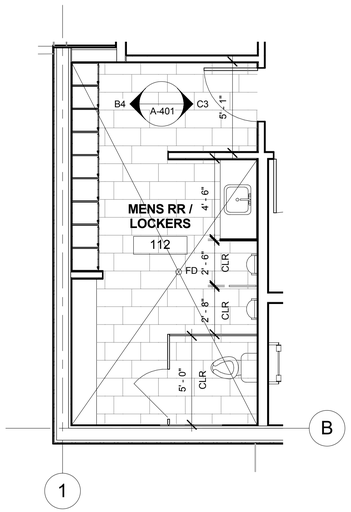

D2 ENLARGED PLAN - MEN'S RR
1/4" = 1'-0"

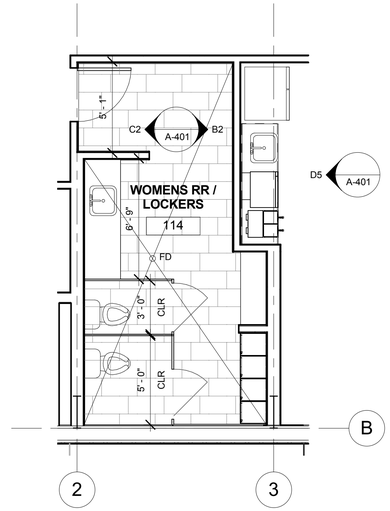

D3 ENLARGED PLAN - WOMEN'S RR
1/4" = 1'-0"

TOILET STALL

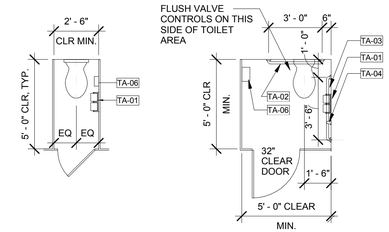

ST- TYPICAL STANDARD STALL ALL STALLS U.O.N

ST- TYPICAL HANDICAP STALL

D4 TOILET ACCESSORIES
1/4" = 1'-0"

GENERAL SHEET NOTES

TOILET ACCESSORY

TA-01	TOILET TISSUE DISPENSER - BY OWNER
TA-02	GRAB BAR - 3'-0"
TA-03	GRAB BAR - 3'-6"
TA-04	VERTICAL GRAB BAR 1'-6"
TA-05	NOT USED
TA-06	SURFACE MNTD SANITARY DISPOSAL (@ WOMENS ONLY)
TA-07	MIRROR 24 X 36
TA-08	SOAP DISPENSER - BY OWNER
TA-09	TRASH RECEPTICAL - BY OWNER
TA-10	PAPER TOWEL DISPENSER - BY OWNER
TA-18	MOP & BROOM HOLDER W/ SHELF AND HOOK

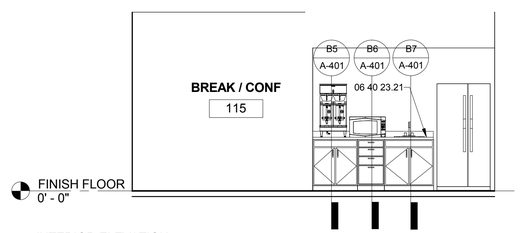

FINISH FLOOR
0' - 0"

D5 INTERIOR ELEVATION
1/4" = 1'-0"

LEGEN

TILE

REFERENCE KEYNOTES

05 40 00.03	6" METAL STUDS - SEE STRUCTURAL
05 50 00.14	STL 2" X 24" CONCEALED COUNTER MOUNTING BRACKET
06 10 00.09	3/4" APA RATED SHEATHING C-D EXT. GRADE
06 40 23.05	PLAM ADJ SHELF
06 40 23.07	4" PLAM TOE KICK AT BASE CABINETS - WRAP INTO AND AROUND ALL SURFACES
06 40 23.10	CABINET/DRAWER PULLS
06 40 23.21	SOLID SURFACE COUNTER TOP
06 40 23.33	BUILT-IN WOOD BENCH - SEE DETAIL
06 40 23.34	SOLID SURFACE BACKSPLASH
06 40 23.35	BASE CABINET - WD VENEER EXTERIOR, PLAM INTERIOR
06 40 23.36	CABINET DOOR - FLUSH OVERLAY - WD VENEER, PLAM INTERIOR
06 40 23.37	CABINET DRAWER - WD VENEER, PLAM INTERIOR
09 29 00.06	1/2" TILE BACKER BD.
09 30 13.01	TILE, SETTING BED & GROUT
09 30 13.02	TILE BASE, SETTING BED & GROUT
10 21 13.01	METAL TOILET COMPARTMENT, OVERHEAD BRACED
10 51 13.01	METAL LOCKER WITH SLOPED TOP & BASE
22 05 00.01	SINK/LAV - SEE PLUMBING
22 05 00.09	PIPE PROTECTIONS - SEE PLUMBING

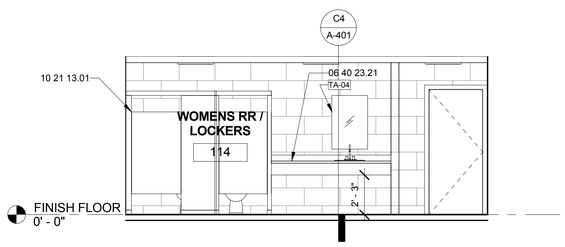

FINISH FLOOR
0' - 0"

C2 INTERIOR ELEVATION
1/4" = 1'-0"

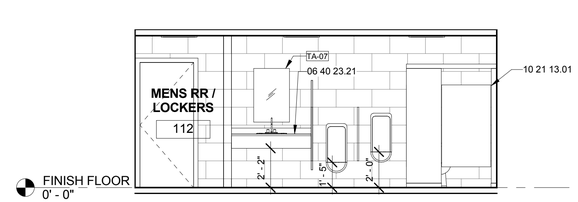

FINISH FLOOR
0' - 0"

C3 INTERIOR ELEVATION
1/4" = 1'-0"

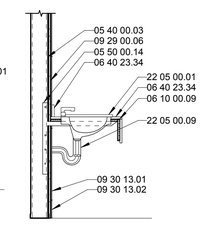

C4 BATHROOM LAV SECTION
1/2" = 1'-0"

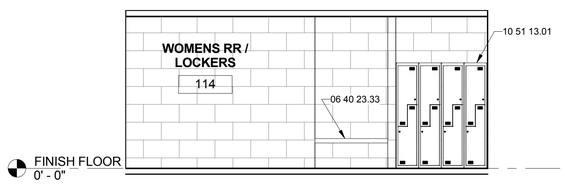

FINISH FLOOR
0' - 0"

B2 INTERIOR ELEVATION
1/4" = 1'-0"

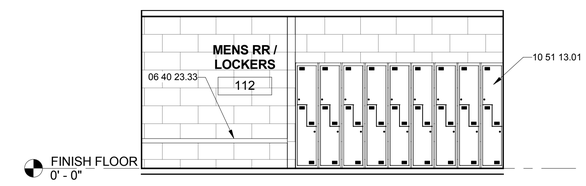

FINISH FLOOR
0' - 0"

B4 INTERIOR ELEVATION
1/4" = 1'-0"

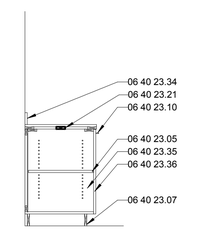

B5 CASEWORK
1/2" = 1'-0"

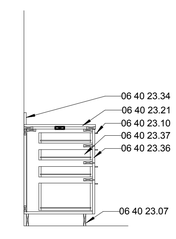

B6 CASEWORK
1/2" = 1'-0"

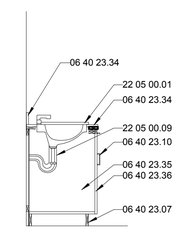

B7 CASEWORK
1/2" = 1'-0"

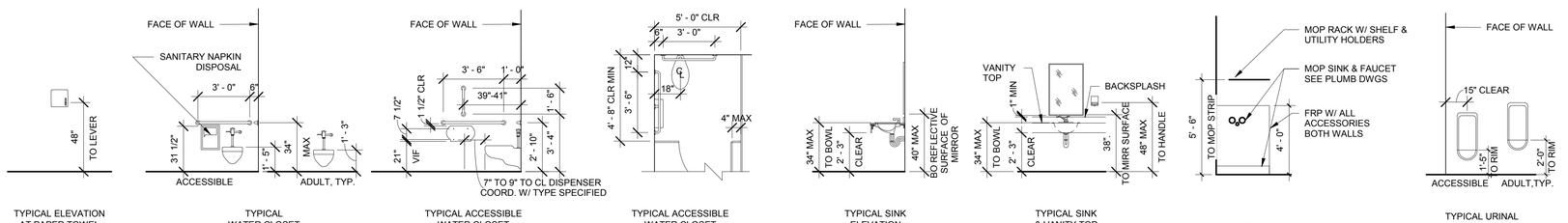

TYPICAL ELEVATION AT PAPER TOWEL DISPENSER

TYPICAL WATER CLOSET ELEVATIONS

TYPICAL ACCESSIBLE WATER CLOSET ELEVATION

TYPICAL ACCESSIBLE WATER CLOSET PLAN

TYPICAL SINK ELEVATION

TYPICAL SINK & VANITY TOP ELEVATION

TYPICAL ELEVATION AT MOP SINK & RACK

TYPICAL URINAL ELEVATION

PROVIDE 1 ACCESSIBLE URINAL IN EACH MEN'S RESTROOM

A2 TYPICAL MOUNTING HEIGHTS
1/4" = 1'-0"

BAER ARCHITECTURE NM LLC

Baer Architecture NM
227 East Palace Avenue Suite C
Santa Fe, NM 87501
505.470.6835
allanbaer@comcast.net

McCLAIN + YU
ARCHITECTURE & DESIGN

McClain + Yu Architecture & Design
2009 Ridgecrest Dr SE
Albuquerque, NM 87108
505.266.2142
info@mcclain-yu.com
www.mcclain-yu.com

CONSULTANTS

STATE OF NEW MEXICO ALLAN T. BAER NO. 2991 REGISTERED ARCHITECT
12/01/2017

STATE OF NEW MEXICO RAIMUNDO J. McCLAIN No. 004757 REGISTERED ARCHITECT
DEC 1, 2017

PROJECT

SANTA FE COUNTY PUBLIC WORKS DEPARTMENT PROPERTY CONTROL FACILITY

ADDRESS

424 NM 599
SANTA FE, NM 87507

Date	DECEMBER 1, 2017
Project Number	0
Project File	
Drawn By	Author
Checked By	Checker

Copyright ©
MCCLAIN + YU ARCHITECTURE AND DESIGN

SHEET TITLE

ENLARGED PLANS AND INTERIOR ELEVATIONS

SHEET A-401 OF

3/27/2018 2:02:08 PM C:\Users\keith\Documents\SFC-PCD_Rachel.rvt

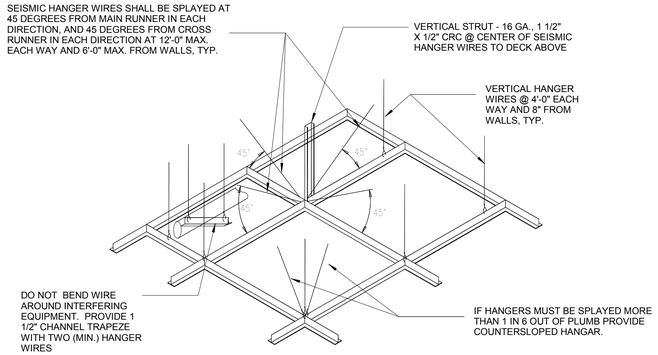

NOTES:

1. HANGER WIRES MUST BE 12 GA MIN. SOFT ANNEALED, MILE STEEL WIRE. WIRES SHALL BE WRAPPED TIGHTLY AT RUNNERS AND SUPPORTS WITH A MIN OF THREE TURNS.
2. CLIPS SHALL HOLD RUNNERS TIGHTLY TOGETHER SPLICE CLIPS SHALL BE CAPABLE OF RESISTING AT LEAST 50 LBS IN TENSION OR COMPRESSION.
3. FOR MANUFACTURED SYSTEMS, SUBMIT SUBSTANTIATION IN ACCORDANCE WITH IBC STANDARDS.
4. RUNNERS SHALL BE CAPABLE OF SUPPORTING CEILING SYSTEM WITH DEFLECTIONS LESS THAN 0.133 INCHES.
5. LOCAL KINKS AND BENDS SHALL NOT BE MADE IN HANGER WIRES FOR LEVELING.
6. ALL SUSPENDED SYSTEMS SHALL BE HUNG IN A SIMILAR FASHION, INCLUDING, BUT NOT LIMITED TO, DUCTWORK, LIGHT FIXTURES, AND PIPING.

C2 LAY-IN SEISMIC BRACING DETAIL
12" = 1'-0"

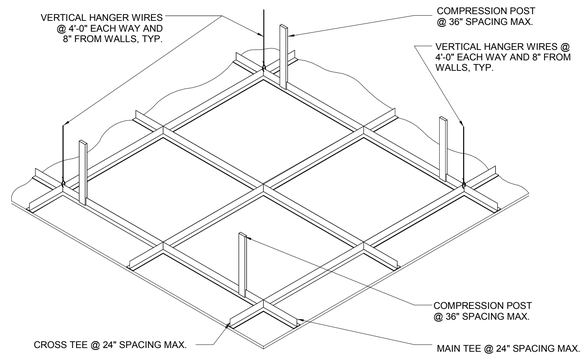

NOTES:

1. HANGER WIRES MUST BE 12 GAUGE MIN. SOFTLY ANNEALY MILD STEEL WIRE. WIRES SHALL BE WRAPPED TIGHTLY WITH A MIN. OF THREE TURNS.
2. CLIPS SHALL HOLD RUNNERS TIGHTLY TOGETHER. SPLICE CLIPS SHALL BE CAPABLE OF RESISTING AT LEAST 50 LBS IN TENSION OR COMPRESSION.
3. FOR MANUFACTURED SYSTEMS, SUBMIT SUBSTANTIATION IN ACCORDANCE WITH IBC STANDARDS.
4. RUNNERS SHALL BE CAPABLE OF SUPPORTING CEILING SYSTEM WITH DEFLECTIONS LESS THAN .133 INCHES.
5. LOCAL KINKS AND BENDS SHALL NOT BE MADE IN HANGER WIRES FOR LEVELING.
6. ALL SUSPENDED SYSTEMS SHALL BE HUNG IN A SIMILAR FASHION, INCLUDING, BUT NOT LIMITED TO DUCTWORK, LIGHT FIXTURES, AND PIPING.

C3 GYP BD CLG SUSPENSION SYSTEM DETAIL
12" = 1'-0"

GENERAL SHEET NOTES

A. ALL PARTITIONS ARE A1 UNLESS NOTED OTHERWISE.

PARTITION TYPE LEGEND

TYPE	THK	STUD	GA	RATING	UL	REMARK
A1	4 7/8"	3 5/8" METAL C	20	NONE	NONE	NONE
A2	7 1/4"	6" METAL C	20	NONE	NONE	NONE
A3	9 1/4"	8" METAL C	20	NONE	NONE	NONE
F1	2 1/4"	1 5/8" METAL C	20	NONE	NONE	EXTERIOR WALL EXCEPT WORKSHOP
F2	4 1/4"	3 5/8" METAL C	20	NONE	NONE	NONE
F3	8 5/8"	8" METAL C	20	NONE	NONE	NONE

B2 PARTITION TYPES LEGEND ALL STUDS @ 16" O.C. U.O.N.
1 1/2" = 1'-0"

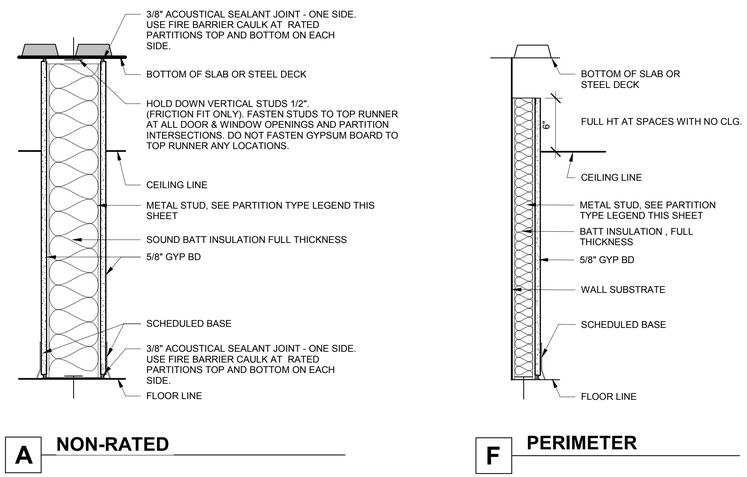

B3 PARTITION TYPES
1 1/2" = 1'-0"

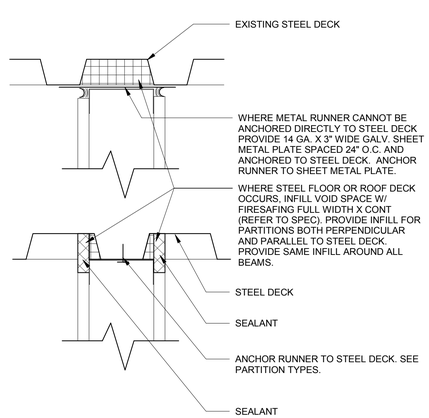

A2 STUD PARTITION TO STEEL DECK
3" = 1'-0"

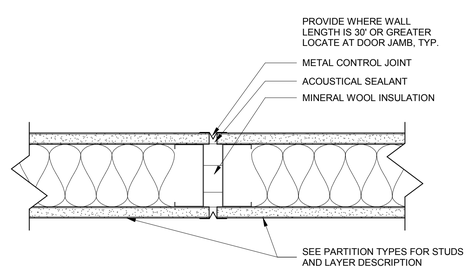

A3 WALL CONTROL JOINT
3" = 1'-0"

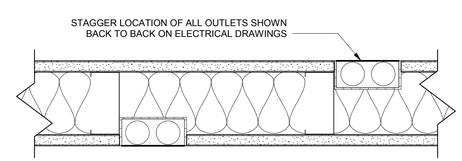

A4 ELECTRICAL / COMMUNICATION BOXES
3" = 1'-0"

BAER ARCHITECTURE NM LLC

Baer Architecture NM
227 East Palace Avenue Suite C
Santa Fe, NM 87501
505.470.6835
allanbaer@comcast.net

McCLAIN + YU
ARCHITECTURE & DESIGN

McClain + Yu Architecture & Design
2009 Ridgecrest Dr SE
Albuquerque, NM 87108
505.266.2142
info@mcclain-yu.com
www.mcclain-yu.com

CONSULTANTS

STATE OF NEW MEXICO ALLAN T. BAER NO. 2991 REGISTERED ARCHITECT
12/01/2017

STATE OF NEW MEXICO RAIMUNDO MCCLAIN No. 004757 REGISTERED ARCHITECT
DEC 1, 2017

PROJECT

SANTA FE COUNTY PUBLIC WORKS DEPARTMENT PROPERTY CONTROL FACILITY

ADDRESS

424 NM 599
SANTA FE, NM 87507

Date	DECEMBER 1, 2017
Project Number	0
Project File	
Drawn By	Author
Checked By	Checker

Copyright ©
MCCLAIN + YU ARCHITECTURE AND DESIGN

SHEET TITLE

DETAILS

A-501
SHEET OF

3/27/2018 2:02:08 PM C:\Users\keith\Documents\SFC-PCD_Rachel.rvt

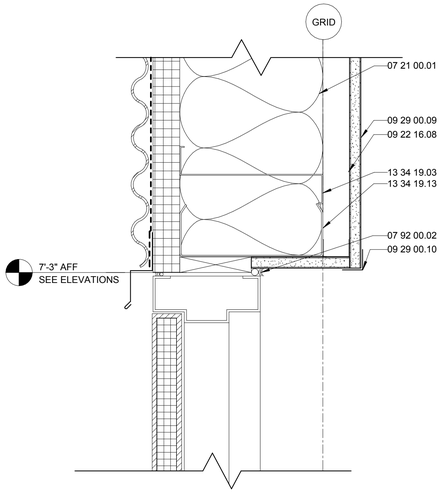

C2 HEAD DETAIL
3" = 1'-0"

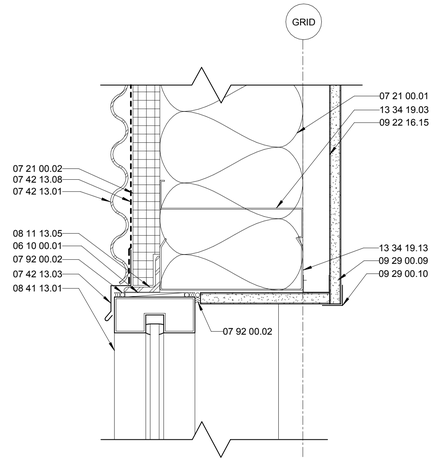

C3 HEAD DETAIL
3" = 1'-0"

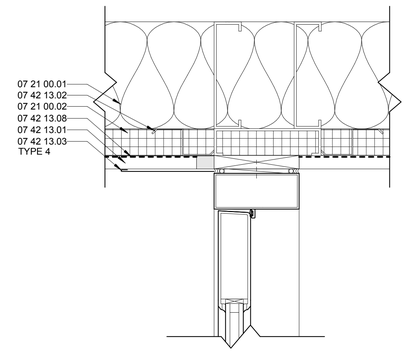

C4 HEAD DETAIL
3" = 1'-0"

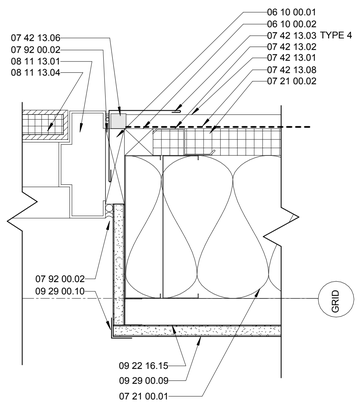

B2 JAMB DETAIL
3" = 1'-0"

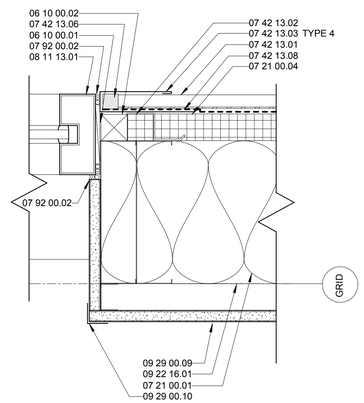

B3 JAMB DETAIL
3" = 1'-0"

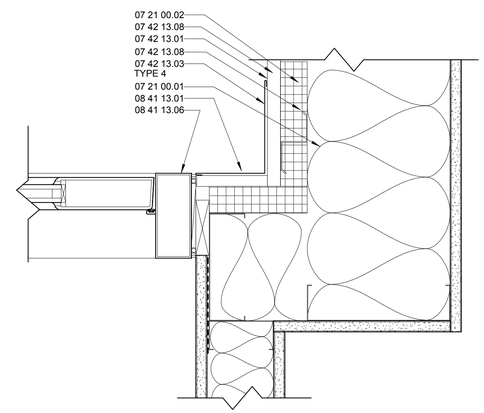

B4 JAMB DETAIL
3" = 1'-0"

GENERAL SHEET NOTES

SPECIFICATIONS KEYNOTES

03 30 00.01	CONC SLAB
05 10 00.05	STEEL ANGLE - SEE STRUCTURAL
05 40 00.07	METAL BLOCKING AS REQ'D
06 10 00.01	WOOD BLOCKING AS REQUIRED
06 10 00.02	TREATED WOOD BLOCKING AS REQUIRED
06 20 00.06	WOOD SILL
07 21 00.01	FIBERGLASS BATT WALL INSULATION W/ FSK
07 21 00.02	EXTRUDED POLYSTYRENE RIGID INSULATION
07 21 00.04	POLYISCOCYANURATE INSUL
07 21 26.01	CELLULOSE BLOWN IN INSULATION
07 42 13.01	METAL WALL PANEL SYSTEM
07 42 13.02	METAL WALL PANEL "Z" FURRING, 16 GAUGE @16" O.C.
07 42 13.03	METAL PANEL SYSTEM DRIP EDGE FLASHING
07 42 13.06	METAL PANEL SYSTEM, TYPICAL CLOSURE
07 42 13.08	BUILDING WRAP
07 62 00.02	METAL FLASHING
07 92 00.02	SEALANT W/ BACKER ROD, COLOR BY ARCHITECT"
08 11 13.01	HOLLOW METAL FRAME - GROUT SOLID
08 11 13.04	EXT INSUL HOLLOW METAL DOOR
08 11 13.05	METAL FRAME CLIP ANCHOR
08 41 13.01	ALUM STOREFRONT SYSTEM
08 41 13.06	ALUMINUM STOREFRONT DOOR
08 71 00.01	ANCHORED MTL THRESHOLD - SET IN SEALANT
08 71 00.02	SWEEP
08 80 00.11	1" INSUL GLAZING
09 22 16.01	1 5/8"x25 GA METAL STUDS
09 22 16.08	FURRING CHANNEL
09 22 16.15	1 5/8" X 20 GA METAL STUDS
09 29 00.09	5/8" TYPE 'X' GYPSUM BOARD - SEE PARTITION TYPES
09 29 00.10	CORNER BEAD
13 34 19.03	WALL GIRT, PAINT ALL EXPOSED SURFACES
13 34 19.08	BASE ANGLE
13 34 19.13	WINDOW/DOOR HEADER
32 13 13.01	4" CONCRETE PAVING

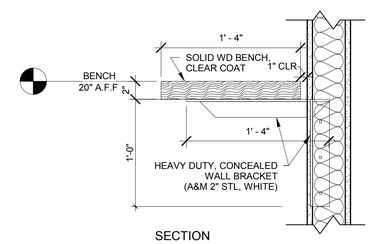

SECTION

NOTE: PROVIDE WOOD STUD SISTER @ METAL STUD. SECURE WALL BRACKET TO WOOD STUD. MAX BRACKET SPACING SHALL BE 32" O.C.

B6 BENCH
1 1/2" = 1'-0"

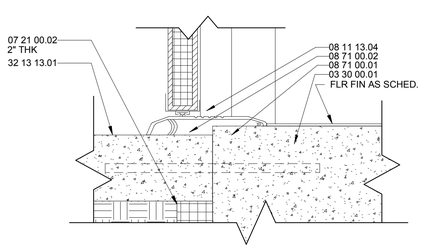

A2 SILL DETAIL
3" = 1'-0"

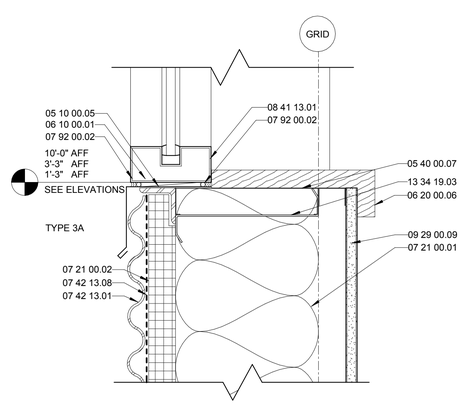

A3 SILL DETAIL
3" = 1'-0"

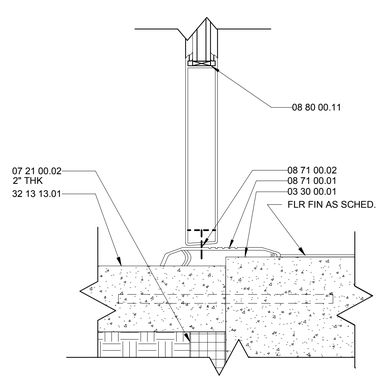

A4 SILL DETAIL
3" = 1'-0"

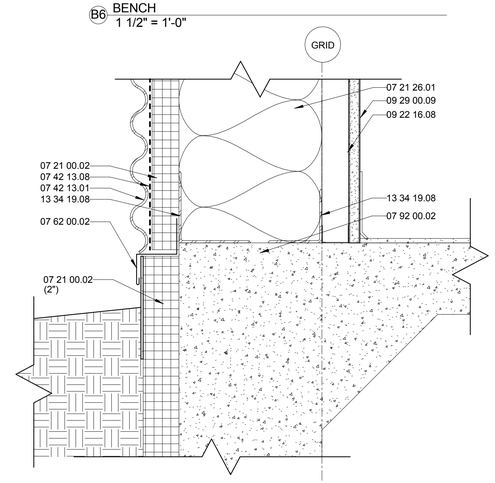

A5 SILL DETAIL
3" = 1'-0"

BAER ARCHITECTURE NM LLC

Baer Architecture NM
227 East Palace Avenue Suite C
Santa Fe, NM 87501
505.470.6835
allanbaer@comcast.net

McCLAIN + YU
ARCHITECTURE & DESIGN

McClain + Yu Architecture & Design
2009 Ridgecrest Dr SE
Albuquerque, NM 87108
505.266.2142
info@mcclain-yu.com
www.mcclain-yu.com

CONSULTANTS

STATE OF NEW MEXICO
ALLAN T. BAER
NO. 2991
REGISTERED ARCHITECT
12/01/2017

STATE OF NEW MEXICO
RAIMUND MCCLAIN
No. 004757
REGISTERED ARCHITECT
DEC 1, 2017

PROJECT

SANTA FE COUNTY PUBLIC WORKS DEPARTMENT PROPERTY CONTROL FACILITY

ADDRESS

424 NM 599
SANTA FE, NM 87507

Date	DECEMBER 1, 2017
Project Number	0
Project File	
Drawn By	Author
Checked By	Checker

Copyright ©
MCCLAIN + YU ARCHITECTURE AND DESIGN

SHEET TITLE

DETAILS

A-502

SHEET OF

3/27/2018 2:02:08 PM C:\Users\keith\Documents\SFC-PCD_Rachel.rvt

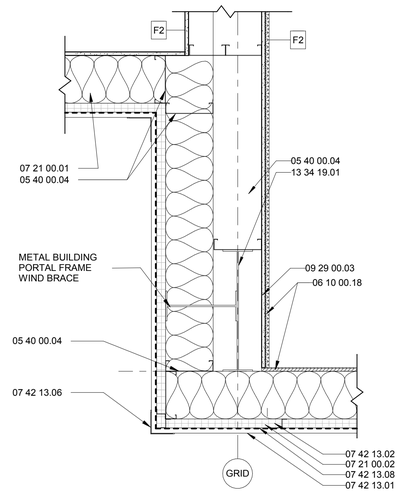

D2 PLAN DETAIL
1" = 1'-0"

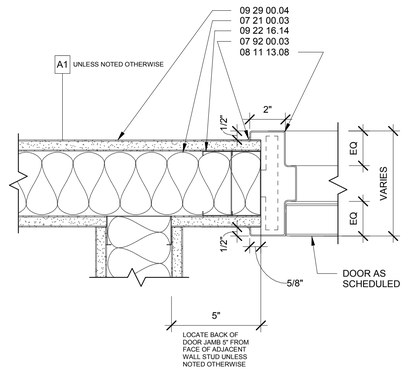

D3 JAMB DETAIL
3" = 1'-0"

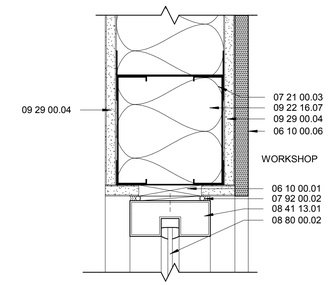

D4 HEAD DETAIL
3" = 1'-0"

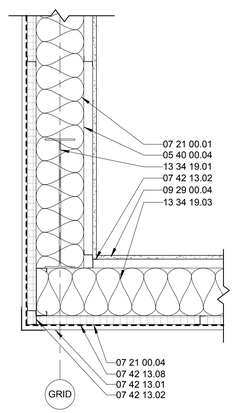

B2 PLAN DETAIL
1" = 1'-0"

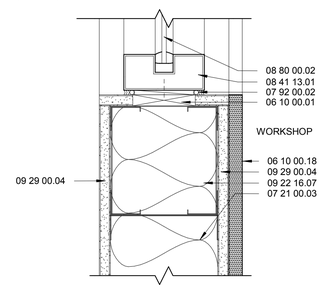

C3 SILL DETAIL
3" = 1'-0"

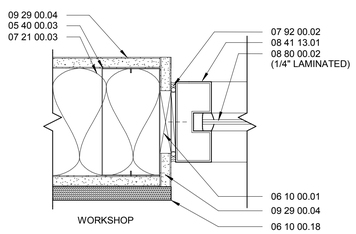

C4 JAMB DETAIL
3" = 1'-0"

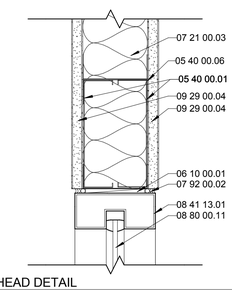

C5 HEAD DETAIL
3" = 1'-0"

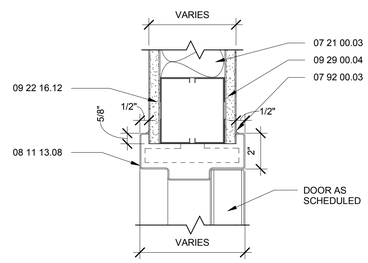

B3 HEAD DETAIL
3" = 1'-0"

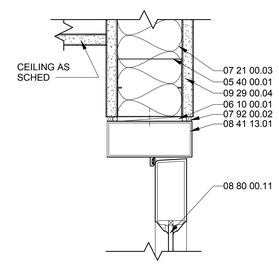

B4 HEAD DETAIL
3" = 1'-0"

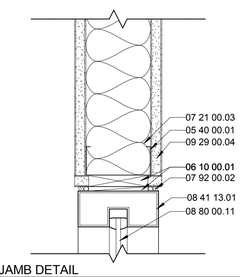

B5 JAMB DETAIL
3" = 1'-0"

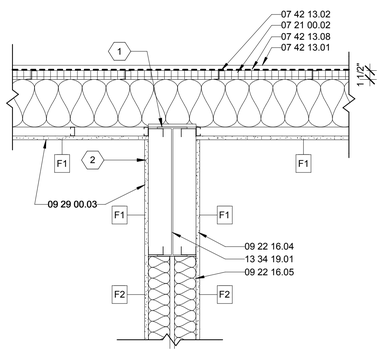

A2 PLAN DETAIL
1" = 1'-0"

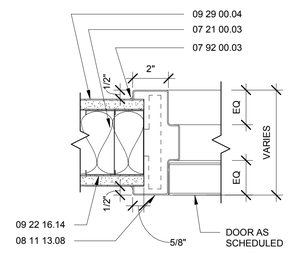

A3 JAMB DETAIL
3" = 1'-0"

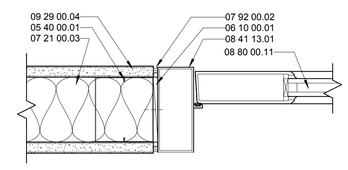

A4 JAMB DETAIL
3" = 1'-0"

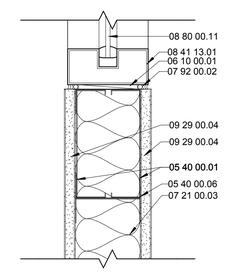

A5 SILL DETAIL
3" = 1'-0"

GENERAL SHEET NOTES

SHEET KEYNOTES - A-503

1 ALIGN FACE OF FRAMING/FURRING WITH EDGE OF BASE PLATE
2 METAL BLDG COLUMN & BASE PLATE - TO BE SIZED BY METAL BLDG SUPPLIER ADJUST BASED ON ACTUAL SIZE

REFERENCE KEYNOTES

05 40 00.01	3 5/8" METAL STUDS - SEE STRUCTURAL
05 40 00.03	6" METAL STUDS - SEE STRUCTURAL
05 40 00.04	8" METAL STUDS - SEE STRUCTURAL
05 40 00.06	BOX HEADER,TYP - SEE STRUCTURAL
06 10 00.01	WOOD BLOCKING AS REQUIRED
06 10 00.06	3/4" APA RATED EXT GRADE FIRE TREATED PLYWOOD SHEATHING
06 10 00.18	3/4" FIRE TREATED PLYWOOD GRADE C|D
07 21 00.01	FIBERGLASS BATT WALL INSULATION W/ FSK
07 21 00.02	EXTRUDED POLYSTYRENE RIGID INSULATION
07 21 00.03	SOUND BATT INSUL - FULL THICKNESS
07 21 00.04	POLYISCOCYANURATE INSUL
07 42 13.01	METAL WALL PANEL SYSTEM
07 42 13.02	METAL WALL PANEL "Z" FURRING, 16 GAUGE @16" O.C.
07 42 13.06	METAL PANEL SYSTEM, TYPICAL CLOSURE
07 42 13.08	BUILDING WRAP
07 92 00.02	SEALANT W/ BACKER ROD, COLOR BY ARCHITECT"
07 92 00.03	SEALANT - EA SIDE TYP
08 11 13.08	HOLLOW METAL FRAME
08 41 13.01	ALUM STOREFRONT SYSTEM
08 80 00.02	1/4 TEMPERED GLAZING
08 80 00.11	1" INSUL GLAZING
09 22 16.04	2 1/2" X 20 GA METAL STUD FRAMING
09 22 16.05	3 5/8"x20 GA METAL STUDS
09 22 16.07	6"x20 GA METAL STUDS
09 22 16.12	METAL STUD BOX HEADER
09 22 16.14	METAL STUD FRAMING
09 29 00.03	TYPE 'X' GYPSUM BOARD - SEE PARTITION TYPES
09 29 00.04	GYPSUM BOARD - SEE PARTITION TYPES
13 34 19.01	RIGID FRAME COLUMN, PAINT ALL EXPOSED SURFACES
13 34 19.03	WALL GIRT, PAINT ALL EXPOSED SURFACES

BAER ARCHITECTURE NM LLC

Baer Architecture NM
227 East Palace Avenue Suite C
Santa Fe, NM 87501
505.470.6835
allanbaer@comcast.net

McCLAIN + YU
ARCHITECTURE & DESIGN

McClain + Yu Architecture & Design
2009 Ridgecrest Dr SE
Albuquerque, NM 87108
505.266.2142
info@mcclain-yu.com
www.mcclain-yu.com

CONSULTANTS

STATE OF NEW MEXICO
ALLAN T. BAER
NO. 2991
REGISTERED ARCHITECT
12/01/2017

STATE OF NEW MEXICO
RAIMUNDO MCCLAIN
No. 004757
REGISTERED ARCHITECT
DEC 1, 2017

PROJECT

SANTA FE COUNTY PUBLIC WORKS DEPARTMENT PROPERTY CONTROL FACILITY

ADDRESS

424 NM 599
SANTA FE, NM 87507

Date	DECEMBER 1, 2017
Project Number	0
Project File	
Drawn By	Author
Checked By	Checker

Copyright ©
MCCLAIN + YU ARCHITECTURE AND DESIGN

SHEET TITLE

DETAILS

SHEET A-503 OF

3/27/2018 2:02:10 PM C:\Users\keith\Documents\SFC-PCD_Rachel.rvt

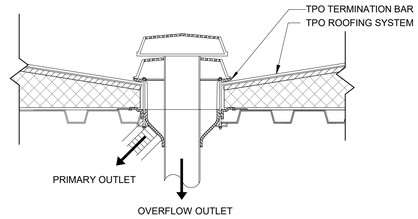

D2 ROOF DRAIN
1 1/2" = 1'-0"

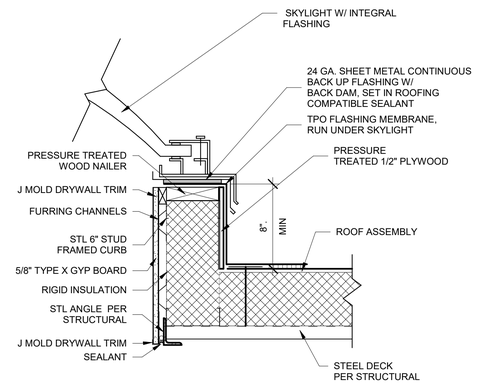

C2 SKYLIGHT
1 1/2" = 1'-0"

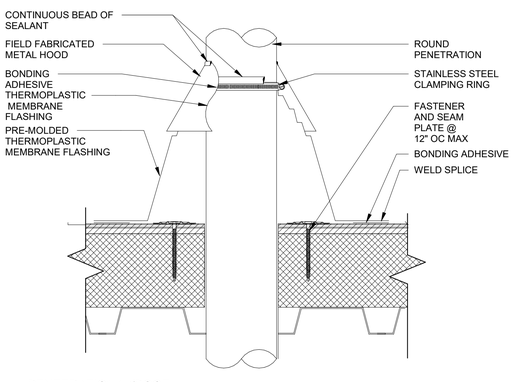

B2 PENETRATION W/BOOT
3" = 1'-0"

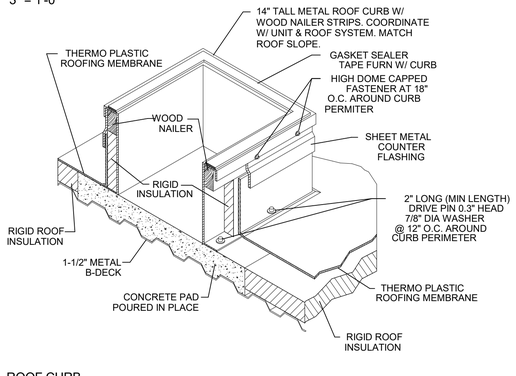

A2 ROOF CURB
1/4" = 1'-0"

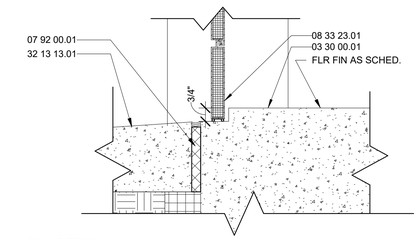

D3 SILL DETAIL
3" = 1'-0"

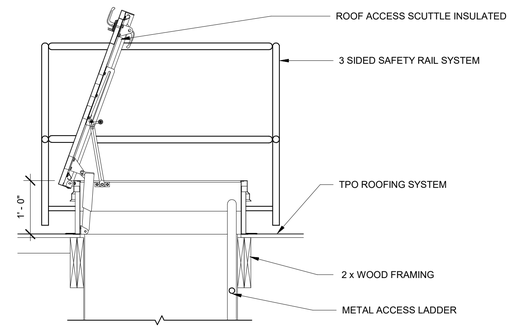

C3 ROOF HATCH
3/4" = 1'-0"

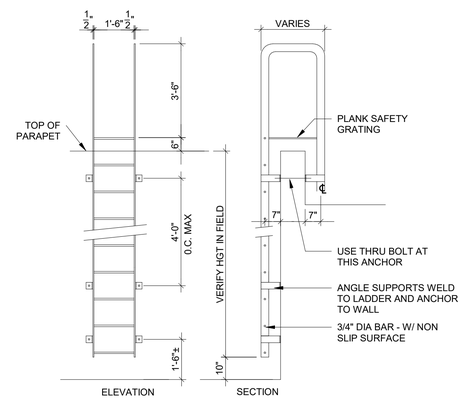

B3 ACCESS LADDER
3/8" = 1'-0"

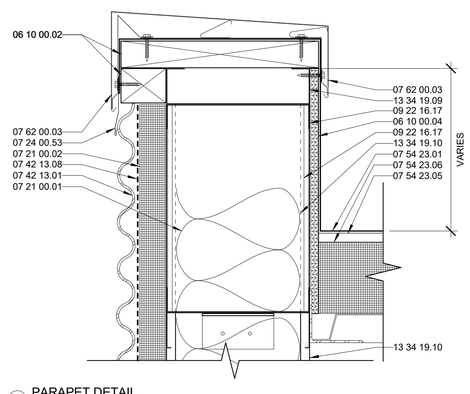

A3 PARAPET DETAIL
3" = 1'-0"

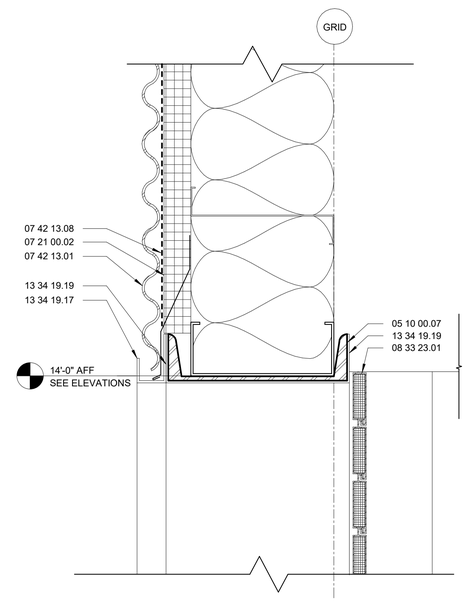

B4 HEAD DETAIL
3" = 1'-0"

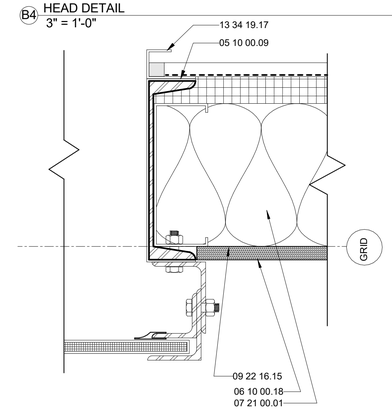

A4 JAMB DETAIL
3" = 1'-0"

GENERAL SHEET NOTES

SPECIFICATION KEYNOTES

03 30 00.01	CONC SLAB
05 10 00.07	STEEL CHANNEL - SEE STRUCTURAL
05 10 00.09	STEEL CHANNEL: C10 X 15.3
06 10 00.02	TREATED WOOD BLOCKING AS REQUIRED
06 10 00.04	1/2" APA RATED EXT GRADE FIRE TREATED PLYWOOD SHEATHING
06 10 00.18	3/4" FIRE TREATED PLYWOOD GRADE C|D
07 21 00.01	FIBERGLASS BATT WALL INSULATION W/ FSK
07 21 00.02	EXTRUDED POLYSTYRENE RIGID INSULATION
07 24 00.53	FLASHING
07 42 13.01	METAL WALL PANEL SYSTEM
07 42 13.08	BUILDING WRAP
07 54 23.01	TPO ROOFING SYSTEM, ADHERED
07 54 23.02	TPO TERMINATION BAR
07 54 23.05	RECOVERY BOARD PER MANUF REQ'S
07 54 23.06	POLYISCOCYANURATE INSUL
07 62 00.03	PREFABRICATED METAL PARAPET CAP, KYNAR FINISH, COLOR BY ARCHITECT
07 92 00.01	SEALANT - COLOR BY ARCHITECT
08 33 23.01	INS OVERHEAD COILING DOOR
09 22 16.15	1 5/8" X 20 GA METAL STUDS
09 22 16.17	8" X 20 GA METAL STUDS
13 34 19.09	CEE CHANNEL
13 34 19.10	PARAPET STUB
13 34 19.17	J-TRIM
13 34 19.19	HEADER COVER TRIM
32 13 13.01	4" CONCRETE PAVING

BAER ARCHITECTURE NM LLC

Baer Architecture NM
227 East Palace Avenue Suite C
Santa Fe, NM 87501
505.470.6835
allanbaer@comcast.net

McCLAIN + YU
ARCHITECTURE & DESIGN

McClain + Yu Architecture & Design
2009 Ridgecrest Dr SE
Albuquerque, NM 87108
505.266.2142
info@mcclain-yu.com
www.mcclain-yu.com

CONSULTANTS

STATE OF NEW MEXICO
ALLAN T. BAER
NO. 2991
REGISTERED ARCHITECT
12/01/2017

STATE OF NEW MEXICO
RAIMUNDO McCLAIN
No. 004757
REGISTERED ARCHITECT
DEC 1, 2017

PROJECT

SANTA FE COUNTY PUBLIC WORKS DEPARTMENT PROPERTY CONTROL FACILITY

ADDRESS

424 NM 599
SANTA FE, NM 87507

Date	DECEMBER 1, 2017
Project Number	2016-051
Project File	
Drawn By	Author
Checked By	Checker

Copyright ©
MCCLAIN + YU ARCHITECTURE AND DESIGN

SHEET TITLE

DETAILS

A-504

SHEET OF

8/31/2018 11:42:32 AM C:\Users\sam\Documents\SFC-PCD_samT6RWC.rvt

GENERAL SHEET NOTES

A. SKYLIGHTS - SEE TYPICAL DETAIL A2/A-503
B. PAINT ALL EXPOSED STEEL AND PLYWOOD SURFACES
C. PAINT ALL EXPOSED METAL BUILDING INSULATION STRAPPING

ROOM FINISH SCHEDULE

ROOM NAME	ROOM NUMBER	FLOOR	WALL N	WALL E	WALL S	WALL W	BASE	CEILING	COMMENTS
VESTIBULE	100	F3	W1	W1	W1	W1	B1	C2	
FACILITY MANAGER	101	F1	W1	W1	W1	W1	B1	C3	
WORKSHOP	102	F4	W3	W3	W3	W3	B1	C3	
SAFETY CENTER	103	F4	W3	W3	W3	W3	B1	C2	
OPEN SPACE TOOLS	104	F4	W1/W3	W1/W3	W1/W3	W1/W3	B1	C2	
PROPERTY CONTROL TOOLS	105	F4	W1/W3	W1/W3	W1/W3	W1/W3	B1	C2	
SECTION SUPERVISOR	106	F1	W1	W1	W1	W1	B1	C3	
PRODUCTION CONTROLLER	107	F1	W1	W1	W1	W1	B1	C3	
COPY	108	F1	W1	NONE	W1	W1	B1	C3	
OPEN WORK STATIONS	108	F1	W1	W1	W1	W1	B1	C3	
PLAN ROOM	109	F1	W1	W1	W1	W1	B1	C3	
FOREMEN	110	F1	W1	W1	W1	W1	B1	C3	
VESTIBULE	111	F3	W1	W1	W1	W1	B1	C2	
MENS RR / LOCKERS	112	F2	W1	W1	W2	W1	B2	C2	
JANITOR	113	F4	W1	W1	W1	W1	B1	C2	
WOMENS RR / LOCKERS	114	F2	W1	W1	W1	W2	B2	C2	
BREAK / CONF	115	F1	W1	W1	W1	W1	B1	C3	
CORRIDOR	116	F1	W1	W1	W1	W1	B1	C1	
ELECTRICAL	117	F4	W1	W1	W1	W1	B1	C2	
MEZZANINE	200	F4	W3	W3	W3	W3	B3	C3	

ROOM FINISH LEGEND

FLOORS:
- F1 VCT
- F2 CERAMIC TILE
- F3 RECESSED WALKOFF MAT
- F4 CONCRETE

BASE:
- B1 RUBBER
- B2 TILE
- B3 NONE

WALLS:
- W1 GYPSUM BOARD, LEVEL 4 PAINT
- W2 CERAMIC TILE
- W3 3/4" FIRE TREATED GRADE A|B PLYWOOD - PAINT

CEILINGS:
- C1 2 X 2 LAY IN, TEGULAR EDGE
- C2 GYPSUM BOARD, LEVEL 4, PAINT, ON SUSPENSION SYSTEM
- C3 OPEN TO STRUCTURE; PAINT ALL VISIBLE SURFACES, COLOR BY ARCHITECT

DOOR SCHEDULE

DOOR NO	SIZE WIDTH	SIZE HEIGHT	SIZE THK	DOOR MATL/FINISH	DOOR TYPE	DOOR HDWR SET	FRAME MATL	FRAME TYPE	FRAME FINISH	DETAILS HEAD	DETAILS JAMB	DETAILS SILL	COMMENTS
100	6' - 0"	7' - 0"	2"	ALUM/CLR ANOD	FG	01	ALUM	2	CLR ANOD	C4/A-502	B4/A-502	A4/A-502	
100B	6' - 0"	7' - 0"	2"	ALUM/CLR ANOD	FG	02	ALUM	2	CLR ANOD	B4/A-503	A4/A-503	-	
101	3' - 0"	7' - 0"	1 3/4"	WD	V1	03	HM	1	PAINT	B3/A-503	A3/A-503	-	
102	6' - 0"	7' - 0"	1 3/4"	HM, PAINT	V1	04	HM	1	PAINT	B3/A-503	A3/A-503	-	
102A	3' - 0"	7' - 0"	1 3/4"	HM, PAINT	V1	05	HM	3	PAINT	C2/A-502	B2/A-502	A2/A-502	
102B	3' - 0"	7' - 0"	1 3/4"	HM, PAINT	V1	05	HM	3	PAINT	C2/A-502	B2/A-502	A2/A-502	
102C	12' - 0"	14' - 0"	1 1/2"	METAL, PAINT	OH	06	METAL	4	PAINT	B4/A-504	A4/A-504	D3/A-504	OH DOOR
103	3' - 0"	7' - 0"	1 3/4"	HM, PAINT	F	07	HM	1	PAINT	B3/A-503	A3/A-503	-	
104	3' - 0"	7' - 0"	1 3/4"	HM, PAINT	F	08	HM	1	PAINT	B3/A-503	A3/A-503	-	
105	3' - 0"	7' - 0"	1 3/4"	HM, PAINT	F	03	HM	1	PAINT	B3/A-503	A3/A-503	-	
106	3' - 0"	7' - 0"	1 3/4"	WD	V1	03	HM	1	PAINT	B3/A-503	A3/A-503	-	
107	3' - 0"	7' - 0"	1 3/4"	WD	V1	03	HM	1	PAINT	B3/A-503	A3/A-503	-	
109	3' - 0"	7' - 0"	1 3/4"	WD	F	03	HM	1	PAINT	B3/A-503	A3/A-503	-	
110	3' - 0"	7' - 0"	1 3/4"	WD	V1	03	HM	1	PAINT	B3/A-503	A3/A-503	-	
111	6' - 0"	7' - 0"	2"	ALUM/CLR ANOD	FG	09	ALUM	2	CLR ANOD	C4/A-502	B4/A-502	A4/A-502	
111B	6' - 0"	7' - 0"	2"	ALUM/CLR ANOD	FG	02	ALUM	2	CLR ANOD	B4/A-503	A4/A-503	-	
112	3' - 0"	7' - 0"	1 3/4"	WD	F	10	HM	1	PAINT	B3/A-503	A3/A-503	-	
113	3' - 0"	7' - 0"	1 3/4"	WD	F	08	HM	1	PAINT	B3/A-503	A3/A-503	-	
114	3' - 0"	7' - 0"	1 3/4"	WD	F	10	HM	1	PAINT	B3/A-503	A3/A-503	-	
115	3' - 0"	7' - 0"	1 3/4"	WD	FG	10	HM	1	PAINT	B3/A-503	A3/A-503	-	
117	3' - 0"	7' - 0"	1 3/4"	HM, PAINT	F	11	HM	2	PAINT	C2/A-502	B2/A-502	A2/A-502	TRANSLUCENT GLAZING

WINDOW SCHEDULE (X)

MARK	MATL	HEIGHT	WIDTH	FINISH	DETAILS HEAD	DETAILS JAMB	DETAILS SILL	MINIBLIND	COMMENTS
W1	ALUM	4' - 2"	4' - 0"	CLR ANOD	C3/A-502	B3/A-502	A3/A-502	YES	
W2									
W3	ALUM	4' - 2"	12' - 0"	CLR ANOD	C3/A-502	B3/A-502	A3/A-502	YES	
W4	ALUM		12' - 0"	CLR ANOD	C3/A-502	B3/A-502	A3/A-502	YES	
W5	ALUM	4' - 2"	8' - 0"	CLR ANOD	D3/A-502	C4/A-503	C3/A-503	YES	
W6	ALUM	4' - 2"	2' - 6"	CLR ANOD	C5/A-503	B5/A-503	A5/A-503	YES	
W7	ALUM	4' - 2"	4' - 0"	CLR ANOD	C5/A-503	B5/A-503	A5/A-503	YES	
W8	ALUM	5' - 11"	10' - 0"	CLR ANOD	C5/A-503	B5/A-503	A5/A-503	YES	

SKYLIGHT SCHEDULE

MARK	SIZE	FINISH	DETAIL	COMMENTS
S1	58"X58"	CLR ANOD	C2/A504	TRIPLE DOME - SEE ENERGY CODE

DOOR FRAME TYPES

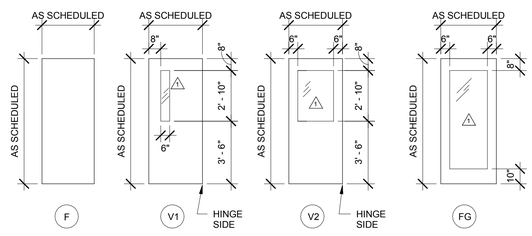

DOOR TYPES

GLAZING LEGEND:

1. INTERIOR DOORS 1/4" CLEAR, TEMPERED GLAZING
2. INTERIOR WINDOWS, SIDELITES AND TRANSOMS: 1/4" CLEAR GLAZING, TEMPERED AS REQ'D BY CODE. EXTERIOR WINDOWS, SIDELITES AND TRANSOMS: 1" CLEAR, INSULATED, LOW E GLAZING, TEMPERED AS REQ'D BY CODE.
3. INTERIOR WINDOWS, SIDELITES AND TRANSOMS: 1/4" TRANSLUCENT GLAZING, TEMPERED AS REQ'D BY CODE. EXTERIOR WINDOWS, SIDELITES AND TRANSOMS: 1" TRANSLUCENT, INSULATED, LOW E GLAZING, TEMPERED AS REQ'D BY CODE.

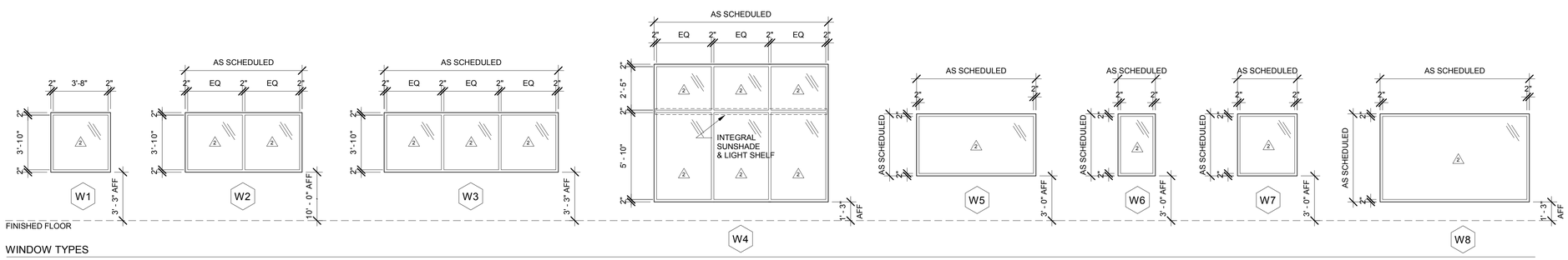

WINDOW TYPES

BAER ARCHITECTURE NM LLC

Baer Architecture NM
227 East Palace Avenue Suite C
Santa Fe, NM 87501
505.470.6835
allanbaer@comcast.net

McCLAIN + YU ARCHITECTURE & DESIGN

McClain + Yu Architecture & Design
2009 Ridgecrest Dr SE
Albuquerque, NM 87108
505.266.2142
info@mcclain-yu.com
www.mcclain-yu.com

CONSULTANTS

STATE OF NEW MEXICO ALLAN T. BAER NO. 2991 REGISTERED ARCHITECT
12/01/2017

STATE OF NEW MEXICO RAIMUNDO MCCLAIN No. 004757 REGISTERED ARCHITECT
DEC 1, 2017

PROJECT

SANTA FE COUNTY PUBLIC WORKS DEPARTMENT PROPERTY CONTROL FACILITY

ADDRESS

424 NM 599
SANTA FE, NM 87507

Date	DECEMBER 1, 2017
Project Number	0
Project File	
Drawn By	Author
Checked By	Checker

Copyright ©
MCCLAIN + YU ARCHITECTURE AND DESIGN

SHEET TITLE

SCHEDULES

A-601

SHEET OF

C:\Users\keith\Documents\SFC-PCD_Rachel.rvt

3/27/2018 2:02:15 PM

GENERAL NOTES

A FOR SYMBOL LEGEND, SEE SHEET P-401.

B FOR FIXTURE SCHEDULE, SEE SHEET P-401.

C FOR MECHANICAL SPECIFICATIONS, SEE SHEET M-301.

D SLOPE HORIZONTAL ROOF DRAIN AND OVERFLOW PIPING AT 1/4" PER FOOT.

E INSULATE HORIZONTAL ROOF DRAIN PIPING.

F ROOF DRAIN PIPING TO BE PVC.

G FOR GAS PIPING SIZES, SEE SHEET P-401 DETAIL A2.

H CONDENSATE DRAIN PIPING TO BE TYPE "L" HARD DRAWN COPPER WITH SOLDER JOINTS.

KEYED NOTES

1 ROUTE ROOF DRAIN DOWN TO SIDEWALK CULVERT.

2 GAS PIPE FROM BELOW, SEE SHEET P-201. SEAL ROOF PENETRATION WATER TIGHT.

3 SUPPORT GAS PIPIE ON MIRO BLOCKS ADHERED TO ROOF.

4 ROUTE GAS PIPE UP OVER PARAPET.

5 PRESSURE REGULATOR TO REGULATE FROM 2 PSI WO 7" WC.

6 PROVIDE GAS COCK, UNION, SEDIMENT TRAP AND FLEX CONNECTION AT UNIT.

7 PLUMBING VENT THROUGH ROOF.

8 WATER HEATER FLUE WITH VENT CAP.

9 EXHAUST DUCT WITH VENT CAP.

10 HEATER FLUE WITH VENT CAP.

11 COMBUSTION AIR GOOSENECK WITH BIRDSCREEN.

12 CONNECT 3/4" CONDENSATE DRAIN TO UNIT. PROVIDE P-TRAP, VENT AND CLEANOUT TEE WITH PLUG AT UNIT.

1 13 ROUTE CONDENSATE DOWN BELOW ROOF, SEE SHEET P-101.

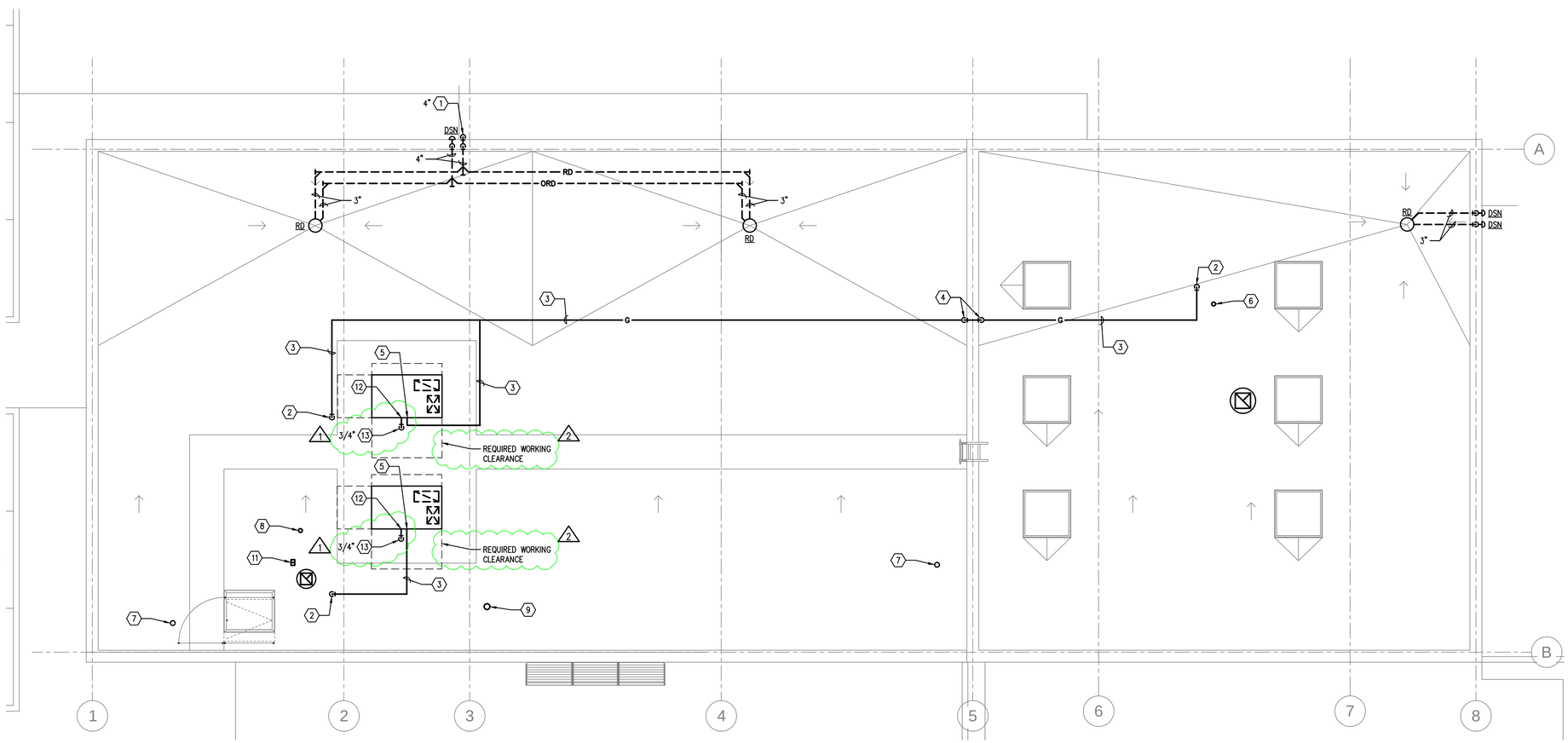

A1 PLUMBING ROOF PLAN
3/16" = 1'-0"

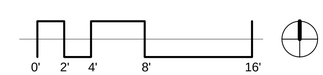

BAER ARCHITECTURE NM LLC

Baer Architecture NM
227 East Palace Avenue Suite C
Santa Fe, NM 87501
505.470.6835
allanbaer@comcast.net

McCLAIN + YU
ARCHITECTURE & DESIGN

McClain + Yu Architecture & Design
2009 Ridgecrest Dr SE
Albuquerque, NM 87108
505.266.2142
info@mcclain-yu.com
www.mcclain-yu.com

CONSULTANTS

Feight Engineering LLC
MECHANICAL • PLUMBING

8416 Estates Dr. NE
Albuquerque, NM 87122
Tel: 505 263-2368

LAWRENCE L. FEIGHT
NEW MEXICO
11120
12-1-17
REGISTERED PROFESSIONAL ENGINEER

PROJECT

SANTA FE COUNTY PUBLIC WORKS DEPARTMENT PROPERTY CONTROL FACILITY

ADDRESS

424 NM 599
SANTA FE, NM 87507

1	12/17	Condensate Pipe Reroute

Date	01 December, 2017
Project Number	11910
Project File	
Drawn By	SJH
Checked By	LLF

Copyright ©
MCCLAIN + YU ARCHITECTURE AND DESIGN

SHEET TITLE

PLUMBING ROOF PLAN

P-101

SHEET OF

GENERAL NOTES

A FOR SYMBOL LEGEND, SEE SHEET P-401.

B FOR FIXTURE SCHEDULE, SEE SHEET P-401.

C FOR MECHANICAL SPECIFICATIONS, SEE SHEET M-301.

D INSULATE ALL HOT WATER PIPING WITH 1 INCH THICK (R-4) INSULATION FOR PIPE SIZES LESS THAN OR EQUAL TO 1.5 INCH DIAMETER.

E FOR GAS PIPING SIZES, SEE SHEET P-401 DETAIL A2.

KEYED NOTES

1 FOR CONTINUATION, SEE CIVIL UTILITY PLAN.

2 INSTALL REDUCED PRESSURE BACKFLOW PREVENTER AT 48" ABOVE FINISH FLOOR. ROUTE 3" DRAIN WITH AIR GAS TO FLOOR SINK BELOW.

3 INSTALL WATER HEATER ON 4" THICK HOUSE KEEPING PAD, COORDINATE WITH STRUCTURAL. FOR WATER HEATER INSTALLATION, SEE SHEET P-401 DETAIL 2.

4 SLEEVE WATER PIPE THROUGH SLAB. PROVIDE MAIN SHUT-OFF VALVE AT 12" ABOVE FINISH FLOOR.

5 GAS METER AND REGULATOR TO REGULATE TO 7" WC. MINIMUM CAPACITY OF 500,000 BTUH. COORDINATE INSTALLATION WITH NEW MEXICO GAS COMPANY.

6 INSTALL MAIN FULL PORT SHUT-OFF VALVE DOWNSTREAM OF METER.

7 ROUTE GAS PIPE TIGHT TO STRUCTURE.

8 GAS PIPE UP TO ROOF, SEE SHEET P-301.

9 GAS PIPE DOWN TO WATER HEATER. PROVIDE GAS COCK, UNION, SEDIMENT TRAP AND FLEX CONNECTION AT HEATER.

10 PROVIDE GAS COCK, UNION, SEDIMENT TRAP AND FLEX CONNECTION AT HEATER.

11 1/2" CW AND 1/2" HW DOWN TO FIXTURE.

12 1/2" CW DOWN TO FIXTURE.

13 3/4" CW DOWN TO FIXTURE.

14 PROVIDE ACCESS DOOR FOR WATER HAMMER ARRESTOR MAINTENANCE. PAINT TO MATCH ADJACENT SURFACE, COORDINATE WITH ARCHITECTURAL.

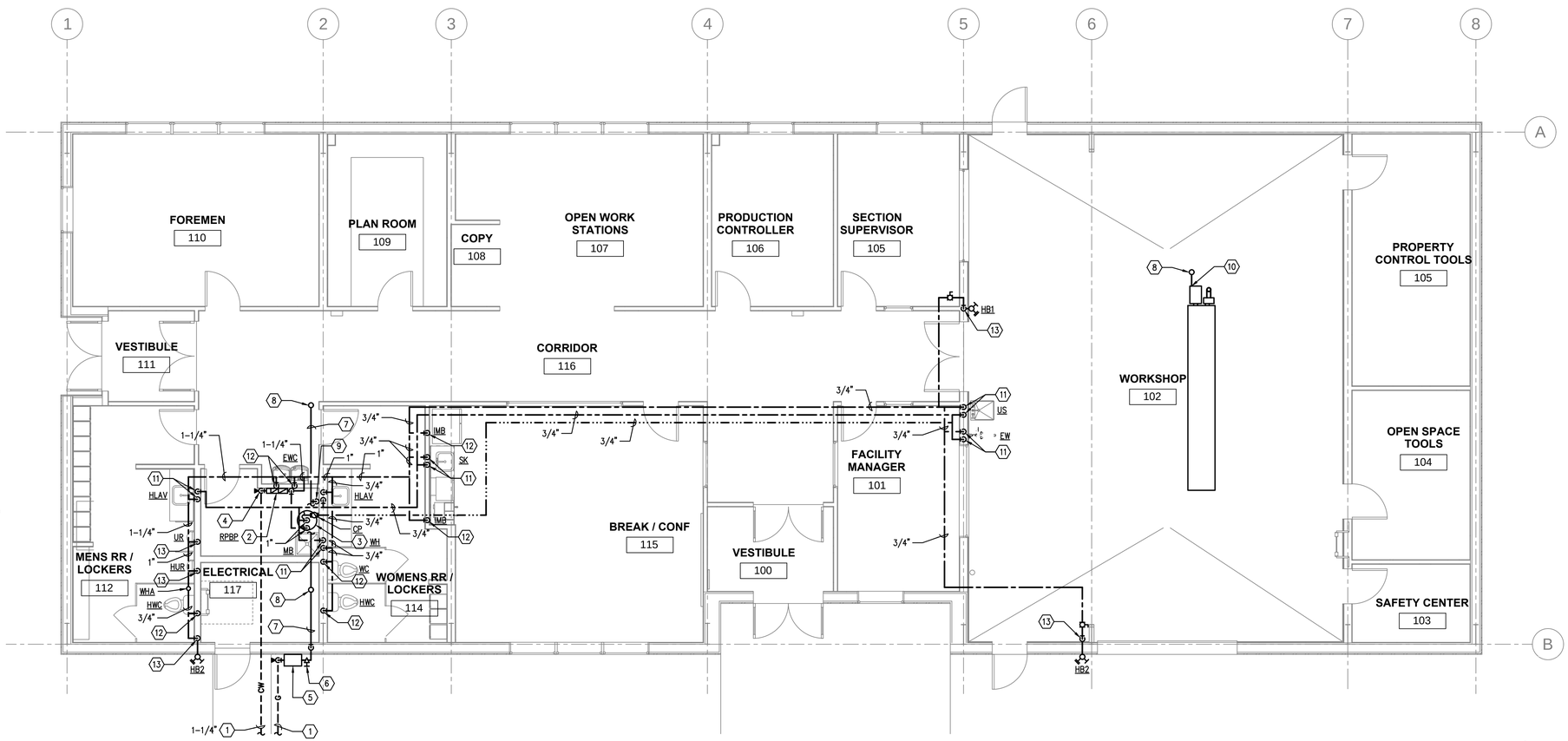

A1 WATER AND GAS PIPING PLAN
3/16" = 1'-0"

0' 2' 4' 8' 16'

BAER ARCHITECTURE NM LLC

Baer Architecture NM
227 East Palace Avenue Suite C
Santa Fe, NM 87501
505.470.6835
allanbaer@comcast.net

McCLAIN + YU ARCHITECTURE & DESIGN

McClain + Yu Architecture & Design
2009 Ridgecrest Dr SE
Albuquerque, NM 87108
505.266.2142
info@mcclain-yu.com
www.mcclain-yu.com

CONSULTANTS

Feight Engineering LLC
MECHANICAL • PLUMBING
8416 Estates Dr. NE
Albuquerque, NM 87122
Tel: 505 263-2368

LAWRENCE L. FEIGHT NEW MEXICO 11120 12-1-17 REGISTERED PROFESSIONAL ENGINEER

PROJECT

SANTA FE COUNTY PUBLIC WORKS DEPARTMENT PROPERTY CONTROL FACILITY

ADDRESS

424 NM 599
SANTA FE, NM 87507

Date	01 December, 2017
Project Number	11910
Project File	
Drawn By	SJH
Checked By	LLF

Copyright ©
MCCLAIN + YU ARCHITECTURE AND DESIGN

SHEET TITLE

WATER AND GAS PIPING PLAN

P-201

SHEET OF

GENERAL NOTES

A FOR SYMBOL LEGEND, SEE SHEET P-401.

B FOR FIXTURE SCHEDULE, SEE SHEET P-401.

C FOR MECHANICAL SPECIFICATIONS, SEE SHEET M-301.

D SLOPE HORIZONTAL ROOF DRAIN AND OVERFLOW PIPING AT 1/4" PER FOOT.

E INSULATE HORIZONTAL ROOF DRAIN PIPING.

F ROOF DRAIN PIPING TO BE PVC.

G FOR GAS PIPING SIZES, SEE SHEET P-401 DETAIL A2.

H CONDENSATE DRAIN PIPING TO BE TYPE "L" HARD DRAWN COPPER WITH SOLDER JOINTS.

KEYED NOTES

1 ROUTE ROOF DRAIN DOWN TO SIDEWALK CULVERT.

2 GAS PIPE FROM BELOW, SEE SHEET P-201. SEAL ROOF PENETRATION WATER TIGHT.

3 SUPPORT GAS PIPIE ON MIRO BLOCKS ADHERED TO ROOF.

4 ROUTE GAS PIPE UP OVER PARAPET.

5 PRESSURE REGULATOR TO REGULATE FROM 2 PSI WO 7" WC.

6 PROVIDE GAS COCK, UNION, SEDIMENT TRAP AND FLEX CONNECTION AT UNIT.

7 PLUMBING VENT THROUGH ROOF.

8 WATER HEATER FLUE WITH VENT CAP.

9 EXHAUST DUCT WITH VENT CAP.

10 HEATER FLUE WITH VENT CAP.

11 COMBUSTION AIR GOOSENECK WITH BIRDSCREEN.

12 CONNECT 3/4" CONDENSATE DRAIN TO UNIT. PROVIDE P-TRAP, VENT AND CLEANOUT TEE WITH PLUG AT UNIT.

13 SUPPORT CONDENSATE DRAIN ON MIRO BLOCKS ADHERED TO ROOF. COORDINATE WITH ROOFING MANUFACTURER.

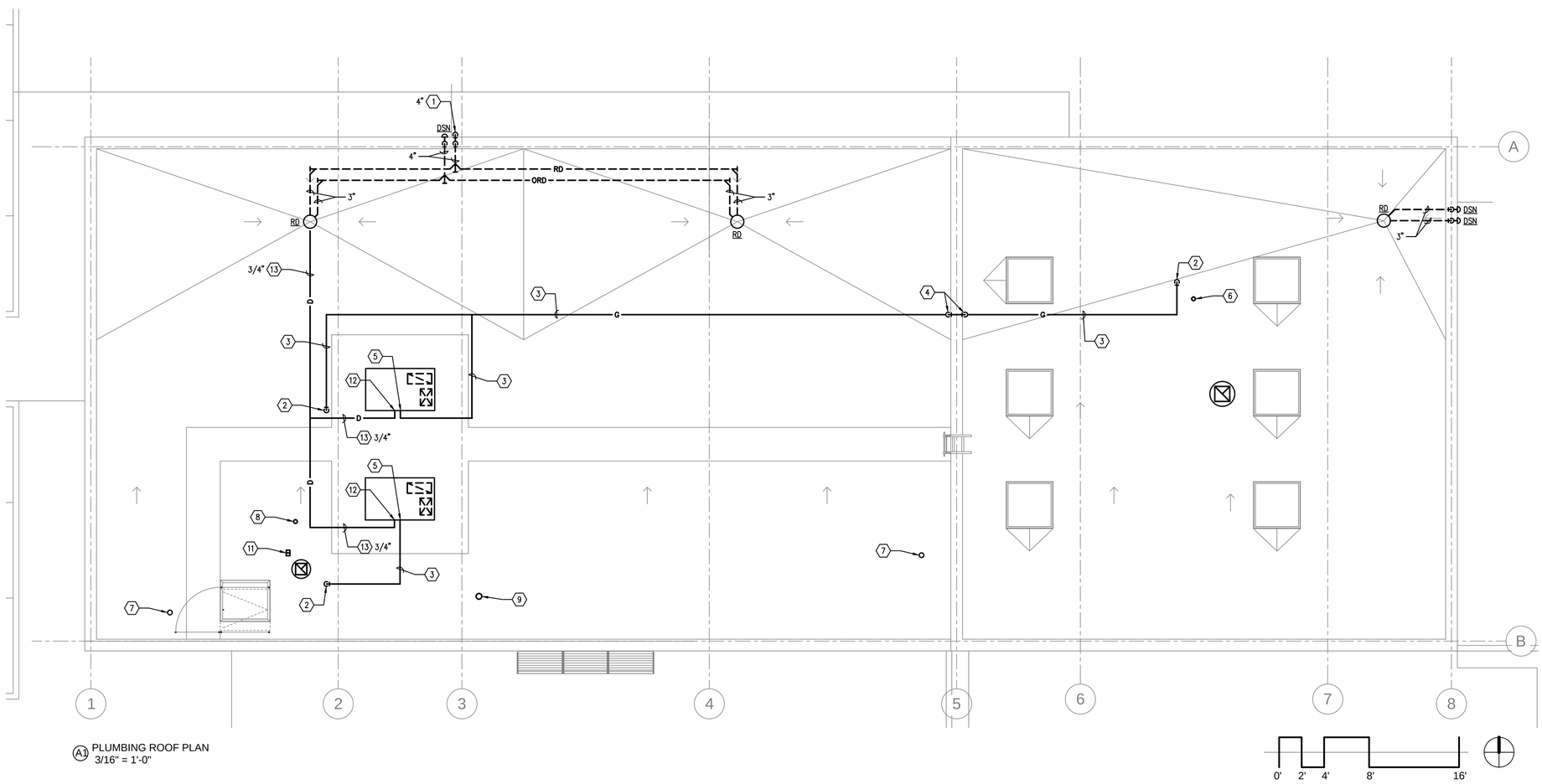

A1 PLUMBING ROOF PLAN
3/16" = 1'-0"

BAER ARCHITECTURE NM LLC

Baer Architecture NM
227 East Palace Avenue Suite C
Santa Fe, NM 87501
505.470.6835
allanbaer@comcast.net

McCLAIN + YU
ARCHITECTURE & DESIGN

McClain + Yu Architecture & Design
2009 Ridgecrest Dr SE
Albuquerque, NM 87108
505.266.2142
info@mcclain-yu.com
www.mcclain-yu.com

CONSULTANTS

Feight Engineering LLC
MECHANICAL • PLUMBING

8416 Estates Dr. NE
Albuquerque, NM 87122
Tel: 505 263-2368

LAWRENCE L. FEIGHT
NEW MEXICO
11120
12-1-17
REGISTERED PROFESSIONAL ENGINEER

PROJECT

SANTA FE COUNTY PUBLIC WORKS DEPARTMENT PROPERTY CONTROL FACILITY

ADDRESS

424 NM 599
SANTA FE, NM 87507

Date	01 December, 2017
Project Number	11910
Project File	
Drawn By	SJH
Checked By	LLF

Copyright ©
MCCLAIN + YU ARCHITECTURE AND DESIGN

SHEET TITLE

PLUMBING ROOF PLAN

P-301

SHEET OF

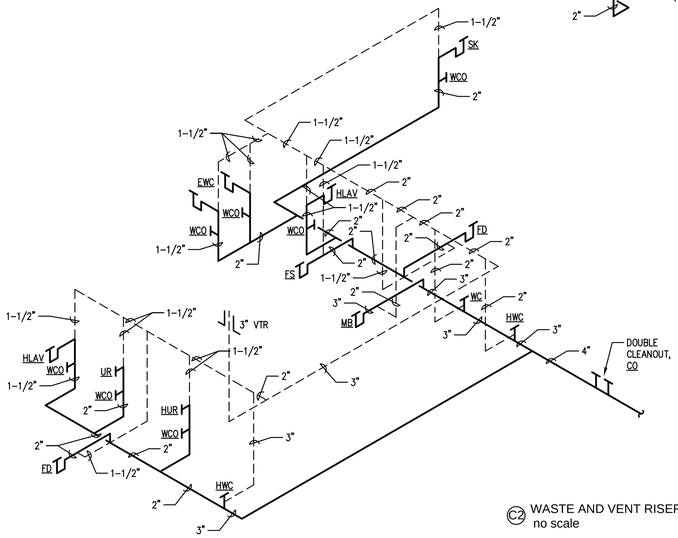

C2 WASTE AND VENT RISER
no scale

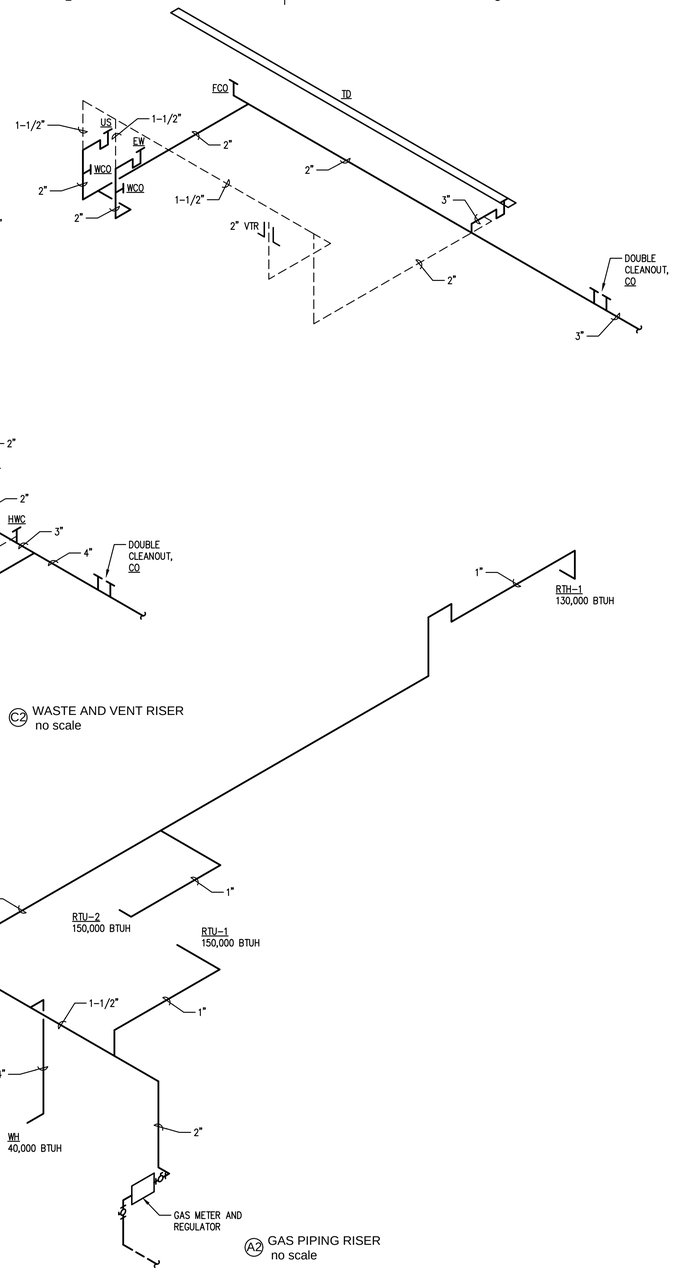

A2 GAS PIPING RISER
no scale

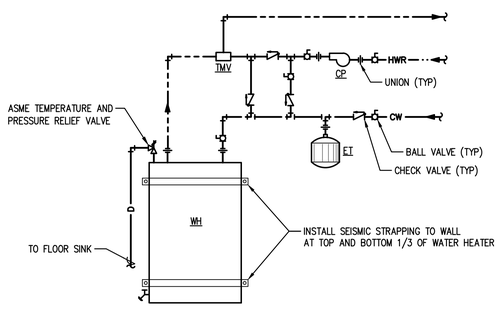

A3 WATER HEATER DETAIL
not to scale

FIXTURE SCHEDULE

HWC WATER CLOSET: AMERICAN STANDARD "CHAMPION PRO" MODEL 211AA.104 VITREOUS CHINA TANK TYPE TOILET, 16-1/2" HIGH ELONGATED BOWL, 1.28 GPF, FULLY GLAZED TRAPWAY, AND 4" PISTON-ACTION ACCELERATOR FLUSH VALVE WITH CHEMICAL RESISTANT FLAPPER. SUPPLIED WITH CHURCH 383SS WHITE CLOSED FRONT ELONGATED SEAT WITH COVER AND STAINLESS STEEL HINGES, MCGUIRE H166 STOP AND SUPPLY. (PROVIDE WITH OPEN FRONT SEAT LESS LID FOR PUBLIC RESTROOMS)

WC WATER CLOSET: AMERICAN STANDARD "CHAMPION PRO" MODEL 211CA.104 VITREOUS CHINA TANK TYPE TOILET, 15" HIGH ELONGATED BOWL, 1.28 GPF, FULLY GLAZED TRAPWAY, AND 4" PISTON-ACTION ACCELERATOR FLUSH VALVE WITH CHEMICAL RESISTANT FLAPPER. SUPPLIED WITH CHURCH 383SS WHITE CLOSED FRONT ELONGATED SEAT WITH COVER AND STAINLESS STEEL HINGES, MCGUIRE H166 STOP AND SUPPLY. (PROVIDE WITH OPEN FRONT SEAT LESS LID FOR PUBLIC RESTROOMS)

HUR URINAL: AMERICAN STANDARD "WASHBROOK" MODEL 6590.001 VITREOUS CHINA URINAL, FLUSHING RIM WASHOUT, ELONGATED RIM 14" FROM FINISHED WALL, EXTENDED SIDES FOR PRIVACY, 0.25 GPF, 3/4" TOP SPUD. SUPPLIED WITH SLOAN "ROYAL" 186-0.25 FLUSH VALVE, SMITH 636 URINAL SUPPORT, MODEL 047068-0070A STAINLESS STEEL STRAINER. NOTE: RIM OF URINAL TO BE AT A HEIGHT OF 15-1/4" FROM FINISHED FLOOR.

UR URINAL: AMERICAN STANDARD "WASHBROOK" MODEL 6590.001 VITREOUS CHINA URINAL, FLUSHING RIM WASHOUT, ELONGATED RIM 14" FROM FINISHED WALL, EXTENDED SIDES FOR PRIVACY, 0.25 GPF, 3/4" TOP SPUD. SUPPLIED WITH SLOAN "ROYAL" 186-0.25 FLUSH VALVE, SMITH 636 URINAL SUPPORT, MODEL 047068-0070A STAINLESS STEEL STRAINER.

HLAV LAVATORY: AMERICAN STANDARD "TOWN SQUARE" MODEL 0700.004 VITREOUS CHINA 23"x19" SELF-RIMMING COUNTERTOP LAVATORY, 4" C-C FAUCET HOLES. SUPPLIED WITH AMERICAN STANDARD "RELIANT PLUS" SINGLE LEVER FAUCET 2385.003 CHROME FINISH, GRID DRAIN, ALL METAL CONSTRUCTION, CERAMIC DISC VALVE CARTRIDGE, ADJUSTABLE HOT TEMPERATURE LIMIT SAFETY STOP. SUPPLIED WITH MCGUIRE 8872 P-TRAP, 167 STOPS AND SUPPLIES. INSULATE DRAINLINE AND WATER SUPPLIES WITH TRUEBRO 102E-Z INSULATION KIT.

SK SINK: ELKAY LRAD-2521 SINGLE COMPARTMENT ADA COMPLIANT 18 GAUGE. STAINLESS STEEL SINK WITH 3 FAUCET HOLES. SUPPLIED WITH LK-232-S-BH5 UNDERMOUNT FAUCET WITH HEAVY DUTY GOOSENECK SPOUT, 5" WRIST HANDLES, LK-35 DUO STRAINER, MCGUIRE P-TRAP, MCGUIRE STOPS AND SUPPLIES.

MB MOP BASIN: FIAT MODEL MSB-2424, MOLDED STONE WITH INTEGRAL OUTLET STRAINER AND FIAT MODEL B-0665 WALL MOUNTED FAUCET WITH INTEGRAL STOPS AND VACUUM BREAKER, FIAT MODEL 889-CC MOP HANGER AND FIAT MODEL 832-AA HOSE AND HOSE BRACKET.

IMB ICE MAKER BOX: GUY GRAY MODEL BIM875 WITH 20 GAUGE GALVANIZED STEEL BOX, 18 GAUGE GALVANIZED STEEL FACEPLATE, AND COMPRESSION ANGLE VALVE SUPPLY CONNECTION.

EWC ELECTRIC WATER COOLER: HALSEY TAYLOR MODEL HTHB-HACGBBLSS-NF, BI-LEVEL WALL MOUNTED REFRIGERATED BARRIER-FREE FOUNTAIN WITH BOTTLE FILL STATION, SELF-CLOSING LIGHT TOUCH PUSH-BARS ON FRONT AND SIDES, STAINLESS STEEL PANEL WITH SATIN FINISH, FACE MOUNTED STAINLESS STEEL BOWLS WITH ONE-PIECE CHROME PLATED TWO-STREAM BUBBLER, GALVANIZED STEEL MOUNTING FRAME, INLET STRAINER, 8.0 GPH OF 50°F WATER AT 90°F AMBIENT AND 80°F INLET WATER, 3.8 FLA. PROVIDE WITH MCGUIRE STOPS AND SUPPLIES.

EW EYEWASH: BRADLEY MODEL S19-220BBF WALL MOUNTED BARRIER FREE EYEWASH STATION WITH CHROME PLATED BRASS SPRAYHEAD ASSEMBLY WITH TWIN SOFT FLOW EYEWASH HEADS AND PROTECTIVE SPRAYHEAD COVERS. PROVIDE WITH BRADLEY MODEL S19-2000 EMERGENCY THERMOSTATIC MIXING VALVE.

US UTILITY SINK: ELKAY MODEL B1C18X18X, 18"x18"x12" DEEP SINGLE COMPARTMENT, 18 GAUGE STAINLESS STEEL TYPE 300, 1-1/2" RADIUS COVED CORNER WELDED CONSTRUCTION, POLISHED SATIN FINISH. PROVIDE WITH (4) GALVANIZED STEEL TUBULAR LEGS WITH ADJUSTABLE FEET, LK-66-B 5" SWING SPOUT FAUCETS, LK-35 GRID STRAINER WITH STOPPER, LK-18B WASTE CONNECTION, TRAP, STOPS AND SUPPLIES.

FIXTURE SCHEDULE

HB1 HOSE BIBB: PRIER MODEL C-155NP.75 CAST BRASS WALL HYDRANT WITH INTEGRAIL CAST FLANGE, SOLID BRASS BODY, VALVE STEM, ASSE 1011 VACUUM BREAKER, SATIN NICKEL PLATED BODY, STAINLESS STEEL SEAT WASHER SCREW AND HANDLE SCREW, AND POWDER COATED METAL HANDLE.

HB2 HOSE BIBB: PRIER MODEL C-634 FREEZELESS CAST BRASS WALL HYDRANT WITH SATIN NICKEL PLATED BODY, ANIT-SIPHON VACUUM BREAKER, AUTOMATIC DRAINING, SOLID NON-FERROUS OPERATING ROD, TRIPLE SEAL POSITIVE SHUT-OFF SYSTEM, LOOSE TEE KEY, PRIER MODEL C-624BX1 SATIN NICKEL PLATED BOX WITH CYLINDER LOCKING DOOR.

FCO FLOOR CLEANOUT: ZURN MODEL Z-1400 ADJUSTABLE CLEANOUT, DURA-COATED CAST IRON BODY WITH GAS AND WATERTIGHT BRONZE PLUG, AND ROUND SCORIATED TOP, ADJUSTABLE TO FINISHED FLOOR.

WCO WALL CLEANOUT: ZURN MODEL Z-1441 WALL CLEANOUT, DURA-COATED CAST IRON BODY WITH GAS AND WATERTIGHT BRONZE PLUG, AND ROUND, SMOOTH STAINLESS STEEL ACCESS COVER WITH SECURING SCREW.

CO CLEANOUT: ZURN MODEL Z-1400-HD ADJUSTABLE CLEANOUT, DURA-COATED CAST IRON BODY WITH GAS AND WATERTIGHT BRONZE PLUG, AND HEAVY DUTY ROUND SCORIATED TOP, ADJUSTABLE TO FINISHED GRADE.

FD FLOOR DRAIN: ZURN MODEL ZN-415S FLOOR DRAIN, CAST IRON BODY WITH BOTTOM OUTLET, COMBINATION INVERTIBLE MEMBRANE CLAMP, ADJUSTABLE COLLAR WITH SEEPAGE SLOTS, TYPE "S" POLISHED NICKEL BRONZE SQUARE HEEL-PROOF LIGHT-DUTY STRAINER. PROVIDE WITH TRAP GUARD MODEL TG22 TRAP SEAL.

FS FLOOR SINK: ZURN MODEL Z-1900-2 FLOOR SINK, 6" DEEP CAST IRON BODY WITH 1/2 GRATE, WITH WHITE ACID RESISTING EPOXY COATING INTERIOR, COMPLETE WITH ABS ANTI-SPLASH INTERIOR BOTTOM DOME STRAINER.

TD TRENCH DRAIN: NDS "DURA SLOPE" PRE-SLOPED TRENCH DRAIN SYSTEM WITH BUILT-IN SLOPE OF 0.7%, MOLDED GRAY STRUCTURAL FOAM POLYETHYLENE WITH UV INHIBITORS AND 4" INSIDE DIAMETER WITH 2" RADIUS BOTTOM (PROVIDE SECTIONS DS-091 THROUGH DS-096 SLOPED SECTIONS). PROVIDE WITH MODEL DS-340 IN-LINE CATCH BASIN AND MODEL 661 UV PROTECTED HIGH DENSITY POLYETHYLENE GRATING RATED FOR CLASS B LOADS.

WHA WATER HAMMER ARRESTOR: PPP INC MODEL SC-1000, PDI CROSS REF. C.

WH WATER HEATER: A.O. SMITH MODEL GUF-40, 40 GALLON STORAGE, 40,000 BTUH INPUT, 42 GPH RECOVERY AT 90°F RISE, 0.65 ENERGY FACTOR, ULTRA-LOW NOx GAS BURNER, DYNACLEAN DIFFUSER DIP TUBE, COREGARD ANODE ROD, AUTOMATIC FLUE DAMPER, BLUE DIAMOND GLASS COATED TANK, BRASS DRAIN VALVE, CSA CERTIFIED AND ASME RATED FACTORY INSTALLED T&P RELIEF VALVE. ENERGY STAR RATED.

ET EXPANSION TANK: AMTROL MODEL ST-8, 3.2 GALLON TANK, NON-ASME, 200°F OPERATING TEMPERATURE, 150 PSI WORKING PRESSURE, 40 PSI FACTORY PRE-CHARGE.

TMV THERMOSTATIC MIXING VALVE: POWERS MODEL MM431, 0.5 GPM MINIMUM FLOW, 11.8 GPM AT 10 PSI PRESSURE DROP, 3/4" INLETS, 3/4" OUTLET, 40°F-160°F TEMPERATURE ADJUSTMENT RANGE (SET AT 110°F).

CP CIRCULATING PUMP: TACO MODEL 006-ST4-2PNP, STAINLESS STEEL CONSTRUCTION, 5 GPM AT 5 FOOT HEAD, 115V, 1 PHASE, 1/40 HP, 0.52 AMPS, 3250 RPM. PROVIDE WITH TACO "00" TIMER AQUASTAT.

RD ROOF DRAIN: FROET MODEL 100C3-OFS-DC COMBINATION ROOF AND OVERFLOW DRAIN WITH 5-1/4" HIGH PRIMARY STRAINER AND 6" HIGH OVERFLOW INLET, POWDER COATED FINISH, CORROSION-RESISTANT FASTENERS, AND DECK CLAMP.

DSN DOWN SPOUT NOZZLE: FROET "CHAMELEON" MODEL LPS6 DOWN SPOUT NOZZLE, CAST ALUMINUM BODY AND FLAPPER, AND POWDER COATED FINISH (COORDINATE POWDER COAT COLOR WITH ARCHITECTURAL).

RPBP REDUCED PRESSURE BACKFLOW PREVENTER: WATTS MODEL LF009QT-S, BRONZE BODY CONSTRUCTION, INTERNAL PRESSURE DIFFERENTIAL RELIEF VALVE, REPLACEABLE SEATS AND SETA DISCS, RESILIENT SEATED FULL-PORT ISOLATION BALL VALVES, TEST COCKS, AIR GAP DRAIN FITTING, AND BRONZE STRAINER.

SYMBOL LEGEND

- DOMESTIC COLD WATER PIPING (CW)
- DOMESTIC HOT WATER PIPING (HW)
- DOMESTIC HOT WATER CIRCULATING PIPING (HWR)
- GAS PIPING
- SANITARY SEWER PIPING
- VENT PIPING
- CONDENSATE DRAIN PIPING
- ROOF DRAIN PIPING
- OVERFLOW ROOF DRAIN PIPING
- PIPING TURNED UP
- PIPING TURNED UP
- VALVE IN PIPE RISE/DROP
- FLOOR SINK
- BALL VALVE
- CHECK VALVE
- RELIEF OR SAFETY VALVE
- HOSE BIBB
- UNION
- GAS COCK

BAER ARCHITECTURE NM LLC

Baer Architecture NM
227 East Palace Avenue Suite C
Santa Fe, NM 87501
505.470.6835
allanbaer@comcast.net

McCLAIN + YU
ARCHITECTURE & DESIGN

McClain + Yu Architecture & Design
2009 Ridgecrest Dr SE
Albuquerque, NM 87108
505.266.2142
info@mcclain-yu.com
www.mcclain-yu.com

CONSULTANTS

Feight Engineering LLC
MECHANICAL • PLUMBING
8416 Estates Dr. NE
Albuquerque, NM 87122
Tel: 505 263-2368

LAWRENCE L. FEIGHT NEW MEXICO 11120 REGISTERED PROFESSIONAL ENGINEER 12-1-17

PROJECT

SANTA FE COUNTY PUBLIC WORKS DEPARTMENT PROPERTY CONTROL FACILITY

ADDRESS

424 NM 599
SANTA FE, NM 87507

Date	01 December, 2017
Project Number	11910
Project File	
Drawn By	SJH
Checked By	LLF

Copyright ©
MCCLAIN + YU ARCHITECTURE AND DESIGN

SHEET TITLE

SCHEDULE, LEGEND AND DETAILS

P-401

SHEET OF

GENERAL NOTES

A FOR SYMBOL LEGEND, SEE SHEET M-201.

B FOR EQUIPMENT SCHEDULE, SEE SHEET M-201.

KEYED NOTES

1 MOUNT UNIT ON ROOF CURB TO MATCH ROOF SLOPE.

2 MOUNT RADIANT HEATER AT 18'-6" ABOVE FINISH FLOOR TO BOTTOM OF UNIT FROM STRUCTURE AT FOUR CORNERS PER MANUFACTURER INSTALLATION INSTRUCTIONS.

3 4"ø EXHAUST VENT THROUGH ROOF.

4 MOUNT ELECTRIC UNIT HEATER ABOVE DOOR.

5 MOUNT EXHAUST FAN IN CEILING. ROUTE 7"ø DUCT UP TO ROOF CAP PROVIDED WITH FAN.

6 MOUNT EXHAUST FAN ON ROOF CURB. STUB 16"x16" DUCT INTO SPACE.

7 MOUNT EXHAUST FAN ON ROOF CURB. ROUTE 12"x12" DUCT UP TO FAN.

8 MOUNT LOUVER 12" ABOVE FINISH FLOOR.

9 MOUNT LOUVER AT CEILING.

10 ROUTE 4"ø FLUE FROM WATER HEATER UP THROUGH ROOF TO VENT CAP.

11 4"x6" COMBUSTION AIR DUCT FROM GOOSENECK WITH BIRDSCREEN ON ROOF DOWN TO (1) 4"x3" DUCT TERMINATED 12" ABOVE FINISH FLOOR AND (1) 4"x3" DUCT TERMINATED 12" BELOW CEILING.

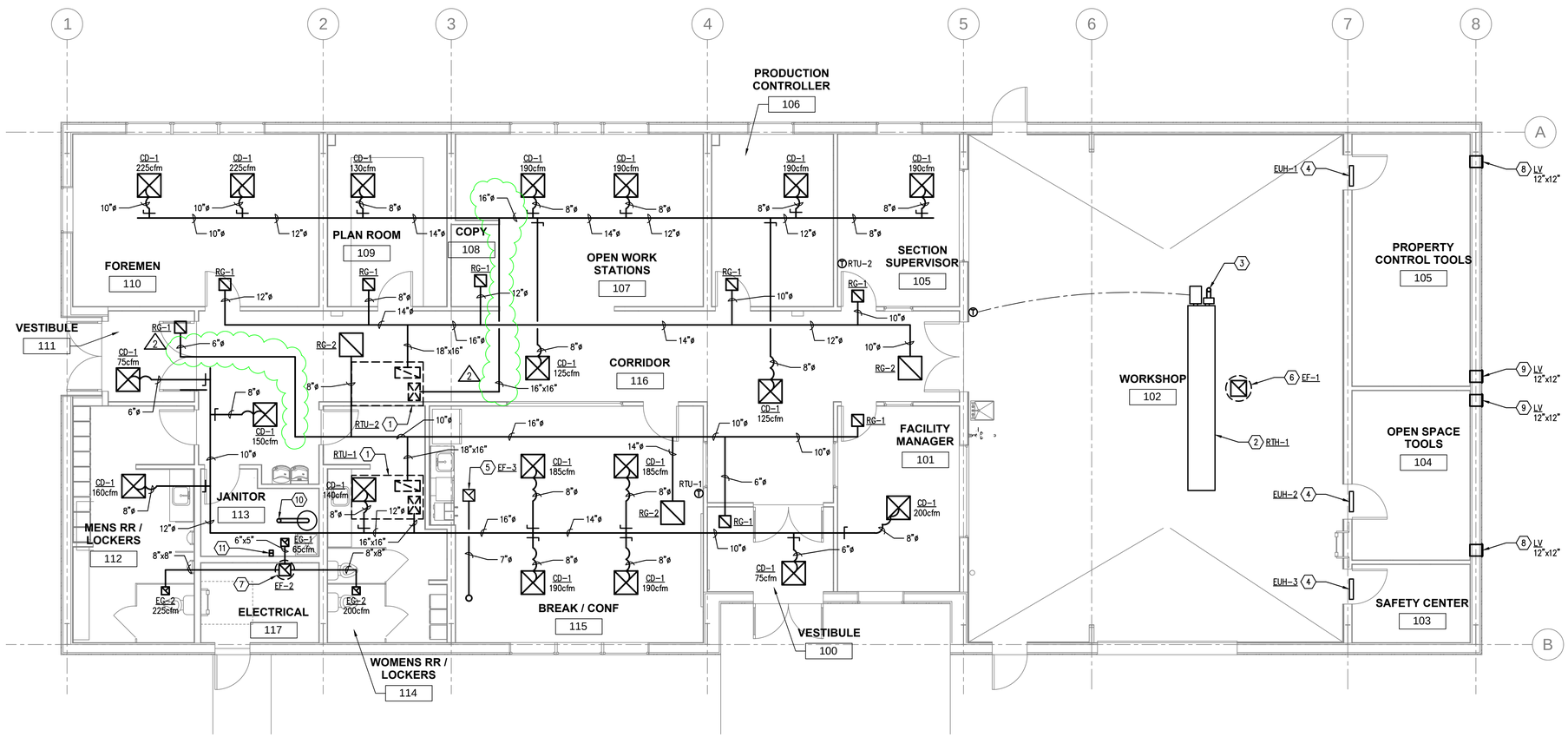

A1 HVAC PLAN
3/16" = 1'-0"

BAER ARCHITECTURE NM LLC

Baer Architecture NM
227 East Palace Avenue Suite C
Santa Fe, NM 87501
505.470.6835
allanbaer@comcast.net

McCLAIN + YU
ARCHITECTURE & DESIGN

McClain + Yu Architecture & Design
2009 Ridgecrest Dr SE
Albuquerque, NM 87108
505.266.2142
info@mcclain-yu.com
www.mcclain-yu.com

CONSULTANTS

Feight Engineering LLC
MECHANICAL • PLUMBING
8416 Estates Dr. NE
Albuquerque, NM 87122
Tel: 505 263-2368

LAWRENCE L. FEIGHT NEW MEXICO 11120 12-1-17 REGISTERED PROFESSIONAL ENGINEER

PROJECT

SANTA FE COUNTY PUBLIC WORKS DEPARTMENT PROPERTY CONTROL FACILITY

ADDRESS

424 NM 599
SANTA FE, NM 87507

2	8/30/18	Revised CID Set
1	12/17	Condensate Pipe Reroute

Date	01 December, 2017
Project Number	11910
Project File	
Drawn By	SJH
Checked By	LLF

Copyright ©
MCCLAIN + YU ARCHITECTURE AND DESIGN

SHEET TITLE

HVAC PLAN

M-101

SHEET OF

SYMBOL LEGEND

⊠	SUPPLY DIFFUSER
⧅	RETURN GRILLE
⧅	EXHAUST GRILLE
—	SIDEWALL REGISTER/TRANSFER GRILLE
⌐—	DAMPER
Ⓣ	THERMOSTAT

SEQUENCE OF OPERATION

ROOF TOP UNITS (RTU-1, 2) – HEATING/COOLING: SET PROGRAMMABLE THERMOSTAT FOR DESIRED DAYS AND TIMES OF OPERATION PER WEEK IN COORDINATION WITH BUILDING USER. SET HEATING AND COOLING TO 72°F (ADJUSTABLE) IN COORDINATION WITH BUILDING USER.

RADIANT TUBE HEATER (RTH-1) – HEATING: SET PROGRAMMABLE THERMOSTAT FOR DESIRED DAYS AND TIMES OF OPERATION PER WEEK IN COORDINATION WITH BUILDING USER. SET HEATING TO 50°F (ADJUSTABLE) IN COORDINATION WITH BUILDING USER.

ELECTRIC UNIT HEATERS (EUH-1, 2, 3) – HEATING: SET HEATING TO 40°F (ADJUSTABLE) IN COORDINATION WITH BUILDING USER.

EQUIPMENT SCHEDULE

RTU-# ROOF TOP UNIT: CARRIER PACKAGE ROOF TOP UNIT WITH R-410A REFRIGERANT, DOWNFLOW ENTHALPY ECONOMIZER WITH BAROMETRIC RELIEF DAMPER AND OUTSIDE AIR DAMPER, LOW AMBIENT CONTROL, TIMED OFF CONTROL, ROOF MOUNTING FRAME, 2" PLEATED FILTERS, AND COIL GUARD.

SYMBOL	CFM	O.A.	INCHES S.P.	BLOWER B.H.P. ②	TOTAL COOLING BTUH ①	HEATING INPUT BTUH	VOLTAGE/ PHASE	MCA	MOCP	MIN. EER	WEIGHT	MODEL ③
RTU-1	1,550	250	0.8	0.94	38,500	150,000	208/3	24.0	30	11.0	680	48TC005
RTU-2	1,590	250	0.8	0.94	38,500	150,000	208/3	24.0	30	11.0	680	48TC005

① AT 115°F AMBIENT.

② BELT DRIVE.

③ PROVIDE WITH 7-DAY PROGRAMMABLE THERMOSTAT.

RTH-# RADIANT TUBE HEATER: SPACERAY GAS-FIRED TUBE HEATERS WITH 24 VOLT DIRECT SPARK IGNITION AND 100% AUTOMATIC SHUT-OFF SYSTEM. 120V, 1ø, 2.6 AMPS. PROVIDE FOR NATURAL GAS SUPPLY.

SYMBOL	OVERALL LENGTH	TUBE LENGTH	TUBE DIA.	S.L. INPUT MBH (LPG)	DERATED INPUT MBH *	MODEL
RTH-1	17' 6-1/2"	30'-0"	4"	130	104	LTU130-30-N5

NOTES:

1. ALL UNITS VACUUM-VENTED. INDUCER FANS SHALL BE PERMANENTLY LUBRICATED, TEFC, HEAVY-DUTY, BALL-BEARING TYPE.
2. ALL TUBES, REFLECTORS, AND BRACKETS TO BE FACTORY ASSEMBELED, READY TO HANG.
3. SINGLE REFLECTOR TO COVER BOTH TUBES AND COMPLETELY COVER ALL TUBING, INCLUDING U-BENDS. END CAPS TO BE PROVIDED.
4. DIRECT-SPARK IGNITION WITH STEP-OPENING GAS VALVE.
5. ALL TUBING TO BE CALORIZED ALUMINIZED STEEL.
6. LINE VOLTAGE NIGHT SETBACK THERMOSTAT (LUX MODEL PSPLV512) WITH 5/2 DAY PROGRAMMING AND BATTERY BACK-UP.

* PER AGA REQUIREMENTS, DERATION MUST BE ACHIEVED BY REDUCING INPUT (ACCELERATION OF AIR WITHIN TUBES IS NOT APPROVED).

EUH-# ELECTRIC UTILITY HEATER: QMARK UTILITY WELL HOUSE HEATER, EPOXY COATED CORROSION PROTECTED ENCLOSURE, INTEGRAL THERMOSTAT, AND FOR 120V OR 240/208V SINGLE PHASE POWER SUPPLY.

SYMBOL	WATTS	VOLTAGE/ PHASE	AMPS	MODEL
EUH-1,2,3	500/375	120/208/240	4.2/1.8/2.1	WH1500

EF-# EXHAUST FAN: GREENHECK BELT DRIVE ROOF MOUNTED EXHAUST FAN. PROVIDE WITH ROOF CURB, BACKDRAFT DAMPER, AND DISCONNECT SWITCH.

SYMBOL	CFM	INCHES S.P.	HP	VOLTAGE/ PHASE	RPM	MODEL
EF-1	1,500	0.25	1/4	120/1	950	GB-141
EF-2	490	0.375	1/4	120/1	1,250	GB-081

EF-# EXHAUST FAN: GREENHECK PREMIUM CEILING EXHAUST FAN. PROVIDE WITH DECORATIVE GRILLE, VERTICAL DISCHARGE, BACKDRAFT DAMPER, AND ROOF CAP.

SYMBOL	CFM	INCHES S.P.	WATTS	VOLTAGE/ PHASE	RPM	MAX. SONES	MODEL
EF-3	120	0.25	113	120/1	1400	3.2	SP-A190

CD-# CEILING DIFFUSER: TITUS MODEL TMSA ADJUSTABLE PATTERN, 4-WAY LOUVERED ADJUSTABLE CORE FOR SURFACE MOUNT OR LAY-IN CEILING. NECK SIZE AS SHOWN ON DRAWINGS.

SYMBOL	SIZE
CD-1	24"x24"

RG-# RETURN GRILLE: TITUS MODEL 50F, 1/2"x1/2"x1/2" EGGCRATE FOR SURFACE MOUNT OR LAY-IN CEILING. PROVIDE WITH OPPOSED BLADE DAMPER. NECK SIZE AS SHOWN ON DRAWINGS.

SYMBOL	SIZE
RG-1	12"x12"
RG-2	24"x24"

EG-# EXHAUST GRILLE: TITUS MODEL 50F, 1/2"x1/2"x1/2" EGGCRATE FOR SURFACE MOUNT OR LAY-IN CEILING. PROVIDE WITH OPPOSED BLADE DAMPER.

SYMBOL	SIZE
EG-1	6"x6"
EG-2	8"x8"

LV LOUVER: GREENHECK MODEL ESJ-401 HIGH FREE AREA/LOW AIRFLOW RESISTANCE OUTSIDE AIR LOUVER COMPLETE WITH BIRDSCREEN. SIZE AS SHOWN ON DRAWINGS.

BAER ARCHITECTURE NM LLC

Baer Architecture NM
227 East Palace Avenue Suite C
Santa Fe, NM 87501
505.470.6835
allanbaer@comcast.net

McCLAIN + YU
ARCHITECTURE & DESIGN

McClain + Yu Architecture & Design
2009 Ridgecrest Dr SE
Albuquerque, NM 87108
505.266.2142
info@mcclain-yu.com
www.mcclain-yu.com

CONSULTANTS

Feight Engineering LLC
MECHANICAL • PLUMBING
8416 Estates Dr. NE
Albuquerque, NM 87122
Tel: 505 263-2368

LAWRENCE L. FEIGHT NEW MEXICO 11120 12-1-17 REGISTERED PROFESSIONAL ENGINEER

PROJECT

SANTA FE COUNTY PUBLIC WORKS DEPARTMENT PROPERTY CONTROL FACILITY

ADDRESS

424 NM 599
SANTA FE, NM 87507

Date	01 December, 2017
Project Number	11910
Project File	
Drawn By	SJH
Checked By	LLF

Copyright ©
MCCLAIN + YU ARCHITECTURE AND DESIGN

SHEET TITLE

EQUIPMENT SCHEDULE AND LEGEND

M-201

SHEET OF

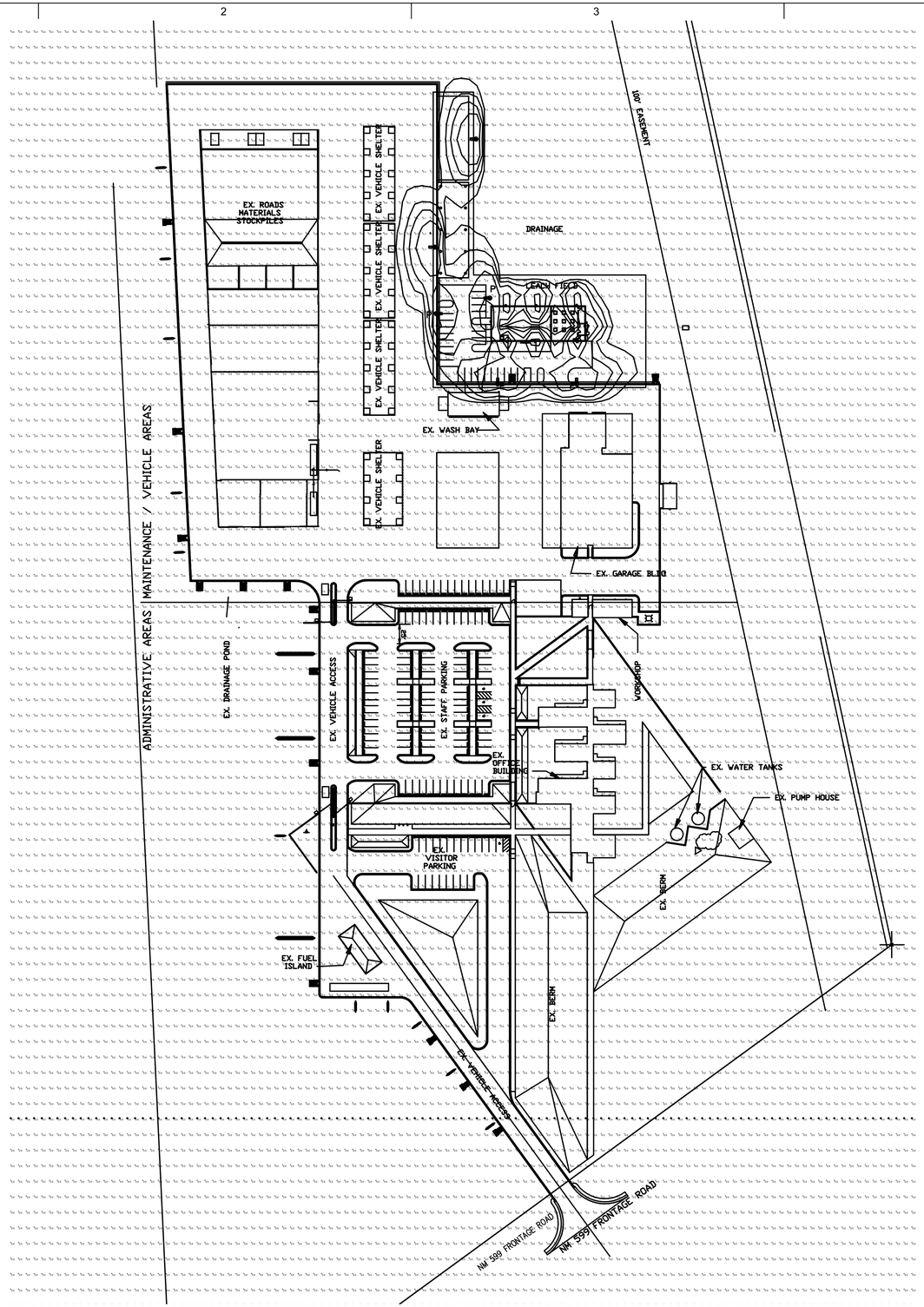

1 SITE SPILL LIGHT CALCULATION
SCALE: 1" = 80'-0"

N

GENERAL NOTES

A FOR POWER RISER DIAGRAM SEE SHEET E-401.

B FOR CONDUCTOR SIZES SEE SHEETS E-101, E-201, E-301 AND E-401.

C FOR GROUNDING CONDUCTOR SIZES SEE SHEETS E-101, E-201, E-301 AND E-401.

D FOR METHOD OF GROUNDING SEE SHEETS E-401 AND ELECTRICAL SPECIFICATIONS.

E FOR LOAD CALCULATIONS SEE SHEET E-501.

F FOR FAULT CURRENT CALCULATIONS SEE SHEET E-401.

G FOR DISCONNECT SIZES AND LOCATIONS SEE SHEETS E-101, E-201 AND E-401.

H FOR PANEL SCHEDULE SEE SHEET E-501.

I FOR WIRING METHODS SEE ELECTRICAL SPECIFICATIONS.

J FOR IECC LIGHTING BUDGET CALCULATIONS SEE SHEET E-601.

K FOR ELECTRICAL LEGEND SEE SHEET E-701.

L FOR ELECTRICAL SPECIFICATIONS SEE ELECTRICAL SPECIFICATION BOOK.

M CONDUITS ARE 1/2" UNLESS INDICATED OTHERWISE.

N CONDUCTORS ARE #12 THHN/THWN, COPPER UNLESS INDICATED OTHERWISE.

P PROVIDE UL LISTED FIRE STOP ASSEMBLY FOR CONDUIT PENETRATIONS THROUGH FIRE RATED CEILINGS, FLOORS, WALLS AND PARTITIONS.

Q MC CABLE MAY BE USED WHERE ALLOWED BY CODE.

R FOR LIGHTING FIXTURE SCHEDULE SEE

S INSTALL BURIED CONDUIT A MINIMUM OF 24 INCHES BELOW GRADE.

T BACK FILL ELECTRICAL CONDUIT TRENCHES WITH ENGINEERED FILL.

U PLACE BACKFILL AND FILL MATERIALS IN LAYERS NOT MORE THAN 8 INCHES IN LOOSE DEPTH FOR MATERIAL COMPACTED BY HEAVY COMPACTION EQUIPMENT AND NOT MORE THAN 4 INCHES IN LOOSE DEPTH FOR MATERIAL COMPACTED BY HAND-OPERATED TAMPERS.

V COMPACT ELECTRICAL CONDUIT TRENCHES TO 95%.

W INSTALL ELECTRICAL WARNING TAPE 12" ABOVE EACH CONDUIT.

X LABEL PANELBOARDS, DISCONNECTS, SWITCHES, RECEPTACLES AND J-BOXES WITH PANEL DESIGNATION AND CIRCUIT NUMBERS.

BAER ARCHITECTURE NM LLC

Baer Architecture NM
227 East Palace Avenue Suite C
Santa Fe, NM 87501
505.470.6835
allanbaer@comcast.net

McCLAIN + YU
ARCHITECTURE & DESIGN

McClain + Yu Architecture & Design
2009 Ridgecrest Dr SE
Albuquerque, NM 87108
505.266.2142
info@mcclain-yu.com
www.mcclain-yu.com

CONSULTANTS

Tarleton Engineering Inc.
MECHANICAL • ELECTRICAL • PLUMBING
910 RIO VISTA CIR. SW
ALBUQUERQUE, NEW MEXICO 87105
Tel: (505) 263-6704

charling@tarenginc.com

GLEN M. TARLETON
NEW MEXICO
6601
REGISTERED PROFESSIONAL ENGINEER
11/29/17

PROJECT

SANTA FE COUNTY
PUBLIC WORKS
DEPARTMENT

PROPERTY CONTROL
FACILITY

ADDRESS

424 NM 599
SANTA FE, NM 87507

Date	
Project Number	
Project File	
Drawn By	
Checked By	

Copyright ©
MCCLAIN + YU ARCHITECTURE AND DESIGN

SHEET TITLE

SITE SPILL LIGHT CALCULATION

E-010

SHEET OF

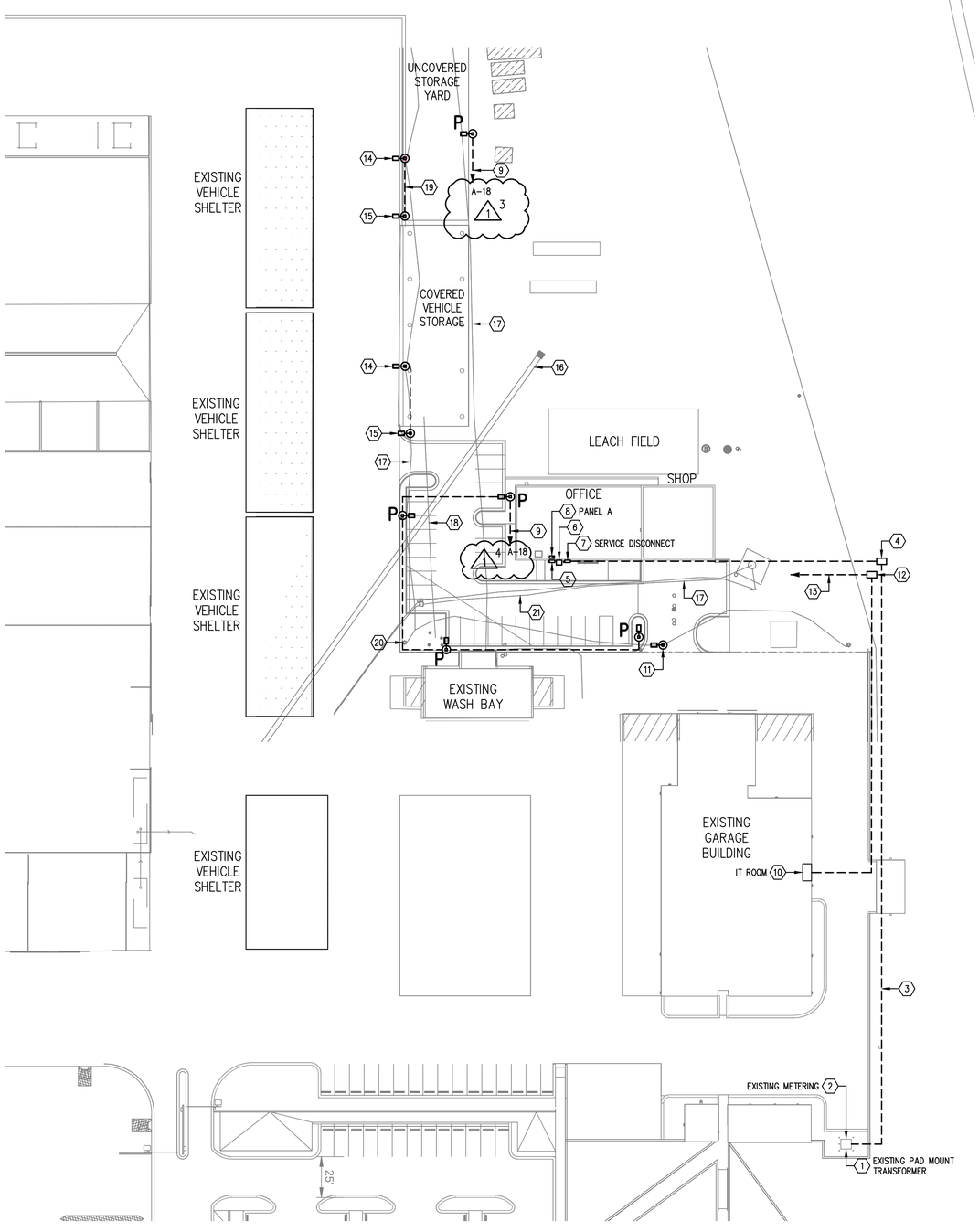

2 ELECTRICAL SITE PLAN
SCALE: 1" = 80'-0"

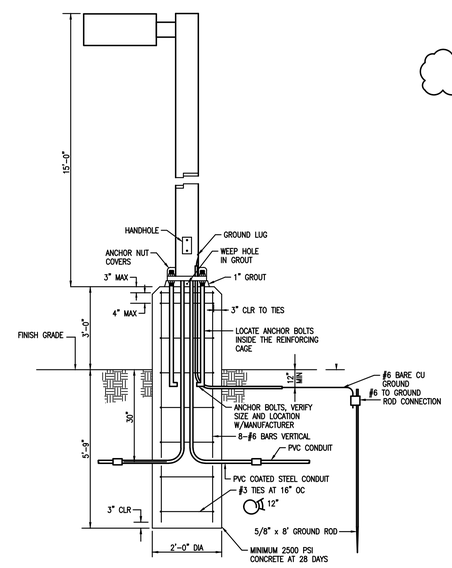

A POLE BASE DETAIL
SCALE: NOT TO SCALE

REVISIONS
1

1	REVIEW COMMENTS 2-20-18	2-20-18

GENERAL NOTES

A FOR POWER RISER DIAGRAM SEE SHEET E-401.

B FOR CONDUCTOR SIZES SEE SHEETS E-101, E-201, E-301 AND E-401.

C FOR GROUNDING CONDUCTOR SIZES SEE SHEETS E-101, E-201, E-301 AND E-401.

D FOR METHOD OF GROUNDING SEE SHEETS E-401 AND ELECTRICAL SPECIFICATIONS.

E FOR LOAD CALCULATIONS SEE SHEET E-501.

F FOR FAULT CURRENT CALCULATIONS SEE SHEET E-401.

G FOR DISCONNECT SIZES AND LOCATIONS SEE SHEETS E-101, E-201 AND E-401.

H FOR PANEL SCHEDULE SEE SHEET E-501.

I FOR WIRING METHODS SEE ELECTRICAL SPECIFICATIONS.

J FOR IECC LIGHTING BUDGET CALCULATIONS SEE SHEET E-601.

K FOR ELECTRICAL LEGEND SEE SHEET E-701.

L FOR ELECTRICAL SPECIFICATIONS SEE ELECTRICAL SPECIFICATION BOOK.

M CONDUITS ARE 1/2" UNLESS INDICATED OTHERWISE.

N CONDUCTORS ARE #12 THHN/THWN, COPPER UNLESS INDICATED OTHERWISE.

P PROVIDE UL LISTED FIRE STOP ASSEMBLY FOR CONDUIT PENETRATIONS THROUGH FIRE RATED CEILINGS, FLOORS, WALLS AND PARTITIONS.

Q MC CABLE MAY BE USED WHERE ALLOWED BY CODE.

R FOR LIGHTING FIXTURE SCHEDULE SEE

S INSTALL BURIED CONDUIT A MINIMUM OF 24 INCHES BELOW GRADE.

T BACK FILL ELECTRICAL CONDUIT TRENCHES WITH ENGINEERED FILL.

U PLACE BACKFILL AND FILL MATERIALS IN LAYERS NOT MORE THAN 8 INCHES IN LOOSE DEPTH FOR MATERIAL COMPACTED BY HEAVY COMPACTION EQUIPMENT AND NOT MORE THAN 4 INCHES IN LOOSE DEPTH FOR MATERIAL COMPACTED BY HAND-OPERATED TAMPERS.

V COMPACT ELECTRICAL CONDUIT TRENCHES TO 95%.

W INSTALL ELECTRICAL WARNING TAPE 12" ABOVE EACH CONDUIT.

X LABEL PANELBOARDS, DISCONNECTS, SWITCHES, RECEPTACLES AND J-BOXES WITH PANEL DESIGNATION AND CIRCUIT NUMBERS.

KEYED NOTES

1 EXISTING UTILITY TRANSFORMER, 480/277 VOLT SECONDARY.

2 EXISTING UTILITY METERING.

3 SECONDARY CONDUIT AND CONDUCTORS. FOR ADDITIONAL INFORMATION SEE POWER RISER DIAGRAM.

4 IN GROUND PULL BOX, 24" X 24" X 24". AASHTO H-20 RATED. INSTALL ACCORDING TO MANUFACTURER'S INSTALLATION INSTRUCTIONS.

5 DRY TYPE TRANSFORMER LOCAL MEANS OF DISCONNECT. FOR ADDITIONAL INFORMATION SEE POWER RISER DIAGRAM.

6 DRY TYPE TRANSFORMER, 480-208/120V. FOR ADDITIONAL INFORMATION SEE POWER RISER DIAGRAM.

7 SERVICE ENTRANCE DISCONNECT. FOR ADDITIONAL INFORMATION SEE POWER RISER DIAGRAM.

8 POWER DISTRIBUTION PANEL. FOR ADDITIONAL INFORMATION SEE POWER RISER DIAGRAM AND PANEL SCHEDULE.

9 ¾" C, (2) #8, (1) #8 G, THHN/THWN2, COPPER. SIZED FOR VOLTAGE DROP. 2

10 EXISTING IT ROOM.

11 EXISTING POLE MOUNT LIGHT FIXTURE AND BASE TO BE REMOVED. MAINTAIN FEED-THRU CIRCUITS. PROVIDE AND INSTALL IN GROUND PULL BOX, 12" X 12" X 12" MINIMUM, AASHTO H-20 RATED. INSTALL ACCORDING TO MANUFACTURER'S INSTALLATION INSTRUCTIONS.

12 IN GROUND PULL BOX, 36" X 36" X 24". AASHTO H-20 RATED. INSTALL ACCORDING TO MANUFACTURER'S INSTALLATION INSTRUCTIONS.

13 (3) 4" CONDUITS WITH PULL STRING FOR INSTALLATION OF TELEPHONE AND DATA CONDUCTORS TO TELEPHONE BOARD LOCATED IN IT ROOM.

14 EXISTING POLE MOUNT LIGHT FIXTURE AND BASE TO BE REMOVED. SALVAGE FOR RELOCATION. MAINTAIN FEED-THRU CIRCUITS. PROVIDE AND INSTALL IN GROUND PULL BOX, 12" X 12" X 12" MINIMUM, AASHTO H-20 RATED. INSTALL ACCORDING TO MANUFACTURER'S INSTALLATION INSTRUCTIONS.

15 INSTALL RELOCATED POLE MOUNT LIGHT FIXTURE AND NEW POLE BASE. PROVIDE NEW ANCHOR BOLTS.

16 EXISTING STORM DRAIN TO REMAIN.

17 EXISTING UNDERGROUND ELECTRICAL TO REMAIN.

18 EXISTING WATER LINE TO REMAIN.

19 EXTEND CONDUIT AND CONDUCTORS FROM IN GROUND PULL BOX IN PREVIOUS LOCATION TO RELOCATED POLE MOUNT LIGHT FIXTURE. MATCH EXISTING CONDUIT AND CONDUCTORS.

20 EXISTING POLE MOUNT LIGHT FIXTURE TO REMAIN.

21 EXISTING SANITARY SEWER LINE TO REMAIN.

BAER ARCHITECTURE NM LLC

Baer Architecture NM
227 East Palace Avenue Suite C
Santa Fe, NM 87501
505.470.6835
allanbaer@comcast.net

McCLAIN + YU
ARCHITECTURE & DESIGN

McClain + Yu Architecture & Design
2009 Ridgecrest Dr SE
Albuquerque, NM 87108
505.266.2142
info@mcclain-yu.com
www.mcclain-yu.com

CONSULTANTS

Tarleton Engineering Inc.
MECHANICAL • ELECTRICAL • PLUMBING
910 RIO VISTA CIR. SW
ALBUQUERQUE, NEW MEXICO 87105
Tel: (505) 263-6704
charling@tarenginc.com

GLEN M. TARLETON
NEW MEXICO
6601
REGISTERED PROFESSIONAL ENGINEER
1 2-20-18

PROJECT

SANTA FE COUNTY
PUBLIC WORKS
DEPARTMENT

PROPERTY CONTROL
FACILITY

ADDRESS

424 NM 599
SANTA FE, NM 87507

Date	
Project Number	
Project File	
Drawn By	
Checked By	

Copyright ©
MCCLAIN + YU ARCHITECTURE AND DESIGN

SHEET TITLE

ELECTRICAL
SITE PLAN

E-101

SHEET OF

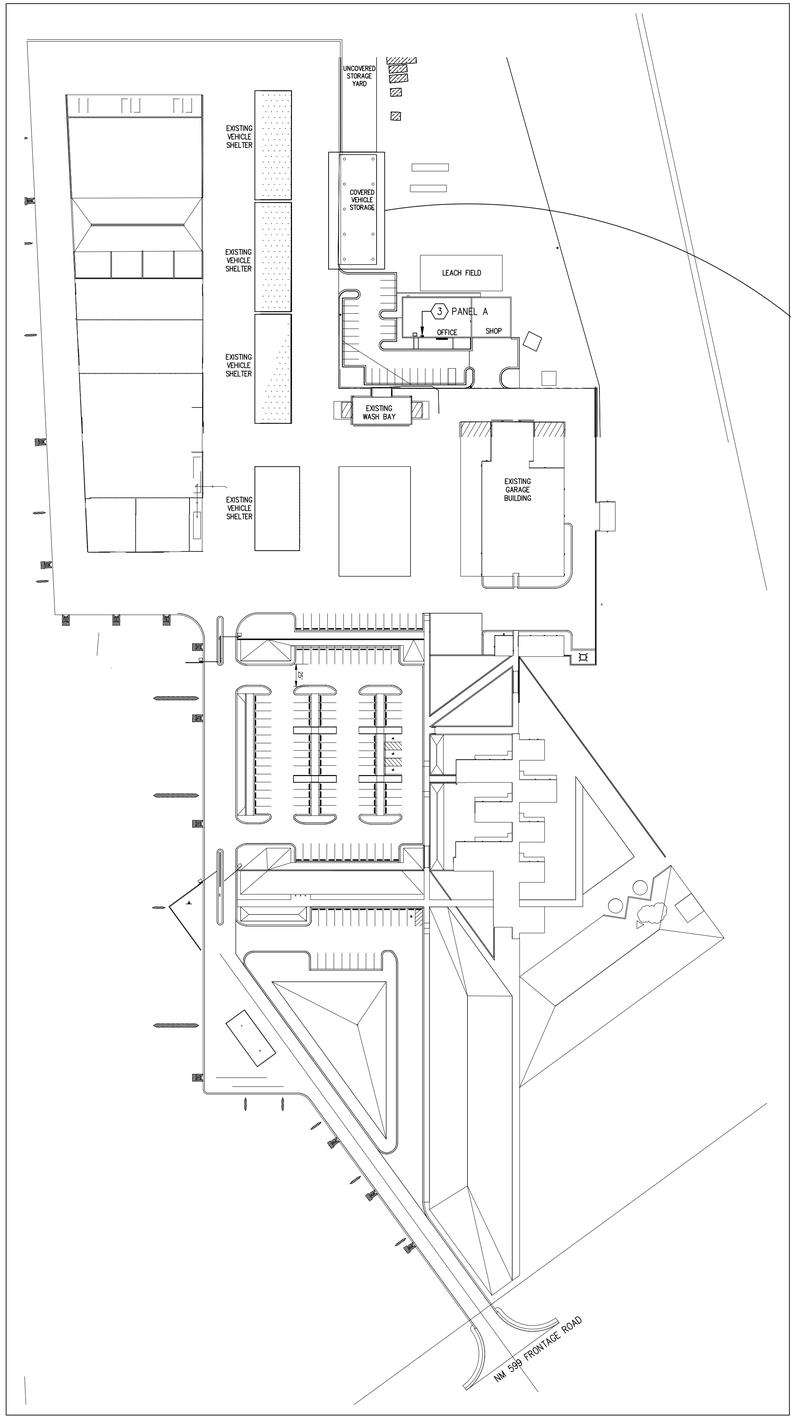

2 ELECTRICAL SITE PLAN
SCALE: 1" = 80'-0"

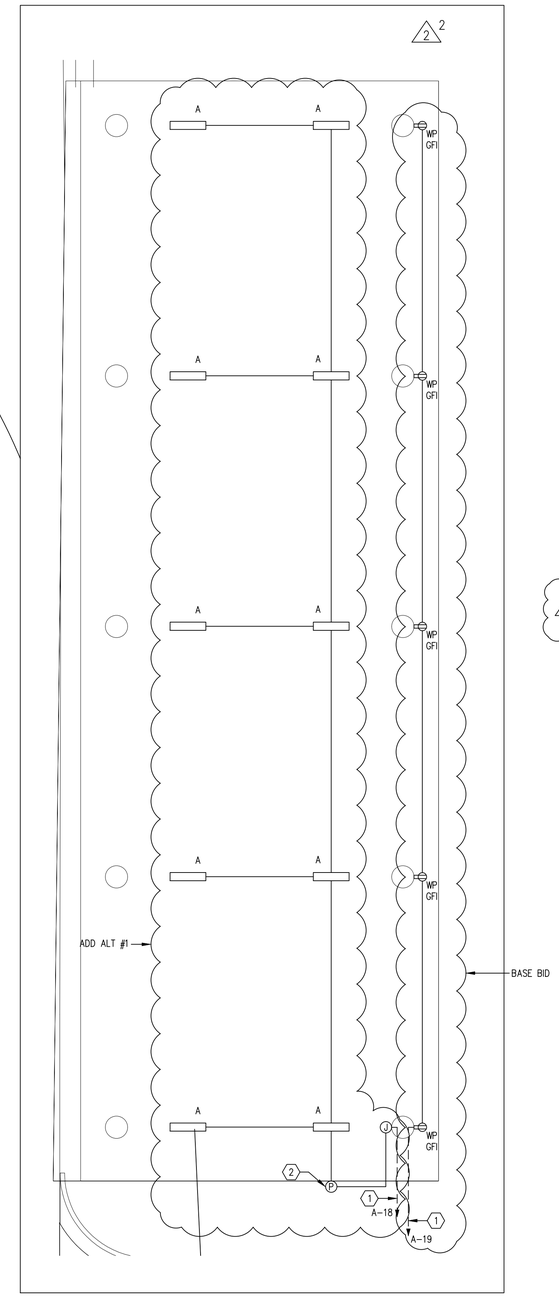

1 ENLARGED COVERED VEHICLE STORAGE PLAN
SCALE: 1/8" = 1'-0"

GENERAL NOTES

A FOR POWER RISER DIAGRAM SEE SHEET E-401.

B FOR CONDUCTOR SIZES SEE SHEETS E-101, E-201, E-301 AND E-401.

C FOR GROUNDING CONDUCTOR SIZES SEE SHEETS E-101, E-201, E-301 AND E-401.

D FOR METHOD OF GROUNDING SEE SHEETS E-401 AND ELECTRICAL SPECIFICATIONS.

E FOR LOAD CALCULATIONS SEE SHEET E-501.

F FOR FAULT CURRENT CALCULATIONS SEE SHEET E-401.

G FOR DISCONNECT SIZES AND LOCATIONS SEE SHEETS E-101, E-201 AND E-401.

H FOR PANEL SCHEDULE SEE SHEET E-501.

I FOR WIRING METHODS SEE ELECTRICAL SPECIFICATIONS.

J FOR IECC LIGHTING BUDGET CALCULATIONS SEE SHEET E-601.

K FOR ELECTRICAL LEGEND SEE SHEET E-701.

L FOR ELECTRICAL SPECIFICATIONS SEE ELECTRICAL SPECIFICATION BOOK.

M CONDUITS ARE 1/2" UNLESS INDICATED OTHERWISE.

N CONDUCTORS ARE #12 THHN/THWN, COPPER UNLESS INDICATED OTHERWISE.

P PROVIDE UL LISTED FIRE STOP ASSEMBLY FOR CONDUIT PENETRATIONS THROUGH FIRE RATED CEILINGS, FLOORS, WALLS AND PARTITIONS.

Q MC CABLE MAY BE USED WHERE ALLOWED BY CODE.

R FOR LIGHTING FIXTURE SCHEDULE SEE

S INSTALL BURIED CONDUIT A MINIMUM OF 24 INCHES BELOW GRADE.

T BACK FILL ELECTRICAL CONDUIT TRENCHES WITH ENGINEERED FILL.

U PLACE BACKFILL AND FILL MATERIALS IN LAYERS NOT MORE THAN 8 INCHES IN LOOSE DEPTH FOR MATERIAL COMPACTED BY HEAVY COMPACTION EQUIPMENT AND NOT MORE THAN 4 INCHES IN LOOSE DEPTH FOR MATERIAL COMPACTED BY HAND-OPERATED TAMPERS.

V COMPACT ELECTRICAL CONDUIT TRENCHES TO 95%.

W INSTALL ELECTRICAL WARNING TAPE 12" ABOVE EACH CONDUIT.

X LABEL PANELBOARDS, DISCONNECTS, SWITCHES, RECEPTACLES AND J-BOXES WITH PANEL DESIGNATION AND CIRCUIT NUMBERS.

KEYED NOTES

1 3/4" C, (2) #8, (1) #8 G, THHN/THEN2, COPPER. SIZED FOR VOLTAGE DROP.

2 PHOTO CELL.

3 PANEL. FOR ADDITIONAL INFORMATION SEE POWER RISER DIAGRAM AND PANEL SCHEDULE.

REVISIONS

1 REVIEW COMMENTS 2-20-18 — 2-20-18

2 REVIEW COMMENTS 9-7-18

BAER ARCHITECTURE NM LLC

Baer Architecture NM
227 East Palace Avenue Suite C
Santa Fe, NM 87501
505.470.6835
allanbaer@comcast.net

McCLAIN + YU ARCHITECTURE & DESIGN

McClain + Yu Architecture & Design
2009 Ridgecrest Dr SE
Albuquerque, NM 87108
505.266.2142
info@mcclain-yu.com
www.mcclain-yu.com

CONSULTANTS

Tarleton Engineering Inc.
MECHANICAL • ELECTRICAL • PLUMBING
910 RIO VISTA CIR. SW
ALBUQUERQUE, NEW MEXICO 87105
Tel: (505) 263-6704
charling@tarenginc.com

GLEN M. TARLETON NEW MEXICO (6601) REGISTERED PROFESSIONAL ENGINEER
9/7/18

PROJECT

SANTA FE COUNTY
PUBLIC WORKS
DEPARTMENT
PROPERTY CONTROL
FACILITY

ADDRESS

424 NM 599
SANTA FE, NM 87507

Date
Project Number
Project File
Drawn By
Checked By

Copyright ©
MCCLAIN + YU ARCHITECTURE AND DESIGN

SHEET TITLE

COVERED VEHICLE STORAGE POWER AND LIGHTING PLAN

E-102

SHEET OF

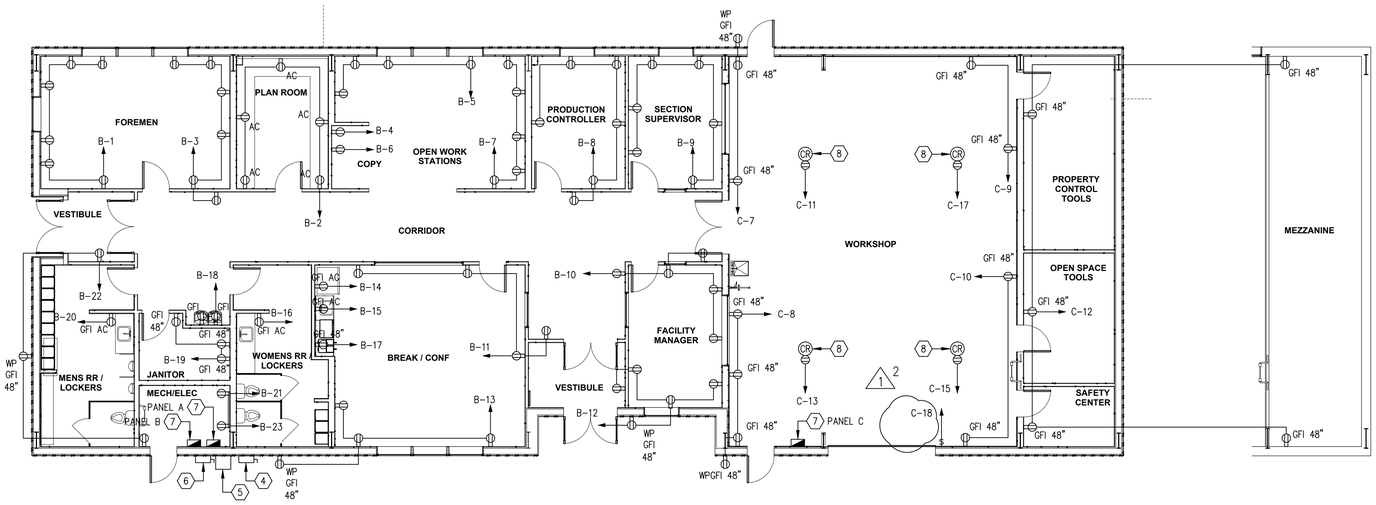

1 POWER PLAN
SCALE: 1/8"=1'-0"

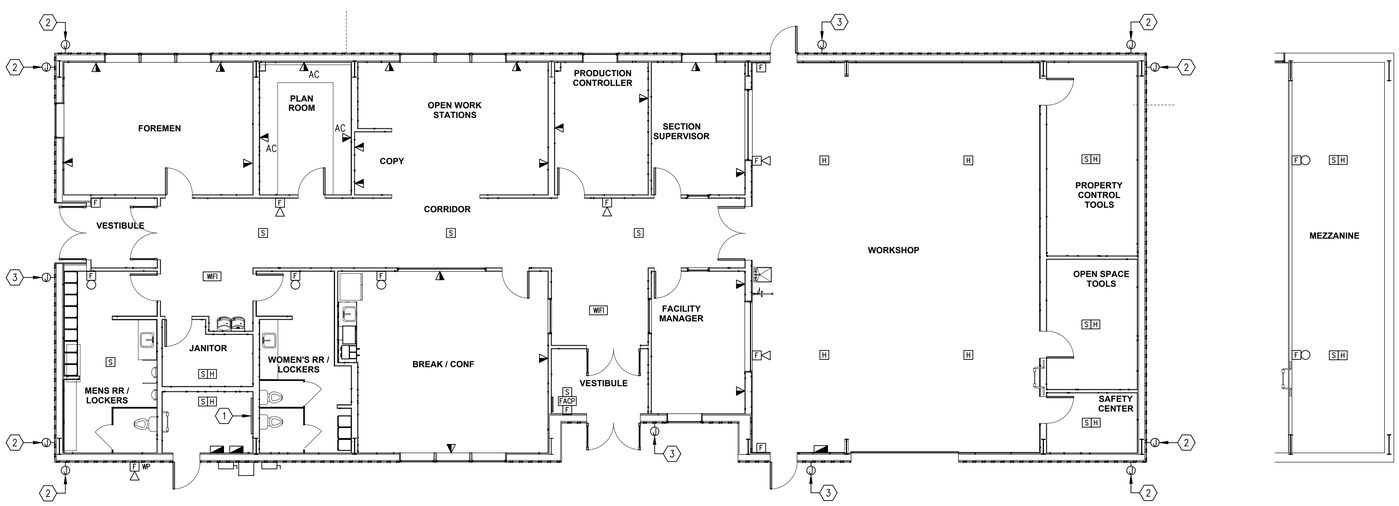

2 SPECIAL SYSTEMS PLAN
SCALE: 1/8"=1'-0"

GENERAL NOTES

A FOR POWER RISER DIAGRAM SEE SHEET E-401.

B FOR CONDUCTOR SIZES SEE SHEETS E-101, E-201, E-301 AND E-401.

C FOR GROUNDING CONDUCTOR SIZES SEE SHEETS E-101, E-201, E-301 AND E-401.

D FOR METHOD OF GROUNDING SEE SHEETS E-401 AND ELECTRICAL SPECIFICATIONS.

E FOR LOAD CALCULATIONS SEE SHEET E-501.

F FOR FAULT CURRENT CALCULATIONS SEE SHEET E-401.

G FOR DISCONNECT SIZES AND LOCATIONS SEE SHEETS E-101, E-201 AND E-401.

H FOR PANEL SCHEDULE SEE SHEET E-501.

I FOR WIRING METHODS SEE ELECTRICAL SPECIFICATIONS.

J FOR IECC LIGHTING BUDGET CALCULATIONS SEE SHEET E-601.

K FOR ELECTRICAL LEGEND SEE SHEET E-701.

L FOR ELECTRICAL SPECIFICATIONS SEE ELECTRICAL SPECIFICATION BOOK.

M CONDUITS ARE 1/2" UNLESS INDICATED OTHERWISE.

N CONDUCTORS ARE #12 THHN/THWN, COPPER UNLESS INDICATED OTHERWISE.

P PROVIDE UL LISTED FIRE STOP ASSEMBLY FOR CONDUIT PENETRATIONS THROUGH FIRE RATED CEILINGS, FLOORS, WALLS AND PARTITIONS.

Q MC CABLE MAY BE USED WHERE ALLOWED BY CODE.

R FOR LIGHTING FIXTURE SCHEDULE SEE

S INSTALL BURIED CONDUIT A MINIMUM OF 24 INCHES BELOW GRADE.

T BACK FILL ELECTRICAL CONDUIT TRENCHES WITH ENGINEERED FILL.

U PLACE BACKFILL AND FILL MATERIALS IN LAYERS NOT MORE THAN 8 INCHES IN LOOSE DEPTH FOR MATERIAL COMPACTED BY HEAVY COMPACTION EQUIPMENT AND NOT MORE THAN 4 INCHES IN LOOSE DEPTH FOR MATERIAL COMPACTED BY HAND-OPERATED TAMPERS.

V COMPACT ELECTRICAL CONDUIT TRENCHES TO 95%.

W INSTALL ELECTRICAL WARNING TAPE 12" ABOVE EACH CONDUIT.

X LABEL PANELBOARDS, DISCONNECTS, SWITCHES, RECEPTACLES AND J-BOXES WITH PANEL DESIGNATION AND CIRCUIT NUMBERS.

KEYED NOTES

1 TELEPHONE BOARD, 4" X 8' X 3/4" PLYWOOD, SANDED, PRIMED AND PAINTED WITH (2) COATS OF WHITE FIRE RESISTANT PAINT.

2 J-BOX, FLUSH MOUNT WITH WEATHERPROOF COVER AND 3/4" CONDUIT WITH PULL STRING TO IT ROOM FOR FUTURE INSTALLATION OF CCTV CAMERAS. FIELD VERIFY LOCATION WITH OWNER PRIOR TO ROUGH-IN.

3 J-BOX, FLUSH MOUNT WITH WEATHERPROOF COVER AND 3/4" CONDUIT WITH PULL STRING TO IT ROOM FOR FUTURE ACCESS CONTROL DEVICE. FIELD VERIFY LOCATION WITH OWNER PRIOR TO ROUGH-IN. COORDINATE INSTALLATION OF LOW VOLTAGE CONDUCTORS TO STRIKE PLATE WITH ACCESS CONTROL CONTRACTOR.

4 SERVICE ENTRANCE DISCONNECT. FOR ADDITIONAL INFORMATION SEE POWER RISER DIAGRAM.

5 DRY TYPE TRANSFORMER, 480-208/120 VOLT,. FOR ADDITIONAL INFORMATION SEE POWER RISER DIAGRAM.

6 TRANSFORMER DISCONNECT. FOR ADDITIONAL INFORMATION SEE POWER RISER DIAGRAM.

7 PANEL-BOARD. FOR ADDITIONAL INFORMATION SEE POWER RISER DIAGRAM AND PANEL SCHEDULE.

8 CORD REEL. REALCRAFT MODEL NUMBER 12T744 OR EQUAL.

REVISIONS

1 POWER FOR OVERHEAD DOOR 9-7-2018

BAER ARCHITECTURE NM LLC

Baer Architecture NM
227 East Palace Avenue Suite C
Santa Fe, NM 87501
505.470.6835
allanbaer@comcast.net

McCLAIN + YU
ARCHITECTURE & DESIGN

McClain + Yu Architecture & Design
2009 Ridgecrest Dr SE
Albuquerque, NM 87108
505.266.2142
info@mcclain-yu.com
www.mcclain-yu.com

CONSULTANTS

Tarleton Engineering Inc.
MECHANICAL • ELECTRICAL • PLUMBING
910 RIO VISTA CIR. SW
ALBUQUERQUE, NEW MEXICO 87105
Tel: (505) 263-6704
charling@tarenginc.com

GLEN M. TARLETON
NEW MEXICO
(6601)
REGISTERED PROFESSIONAL ENGINEER
9/7/18

PROJECT

SANTA FE COUNTY
PUBLIC WORKS
DEPARTMENT

PROPERTY CONTROL
FACILITY

ADDRESS

424 NM 599
SANTA FE, NM 87507

Date
Project Number
Project File
Drawn By
Checked By

Copyright ©
MCCLAIN + YU ARCHITECTURE AND DESIGN

SHEET TITLE

POWER AND SPECIAL SYSTEMS PLANS

E-201

SHEET OF

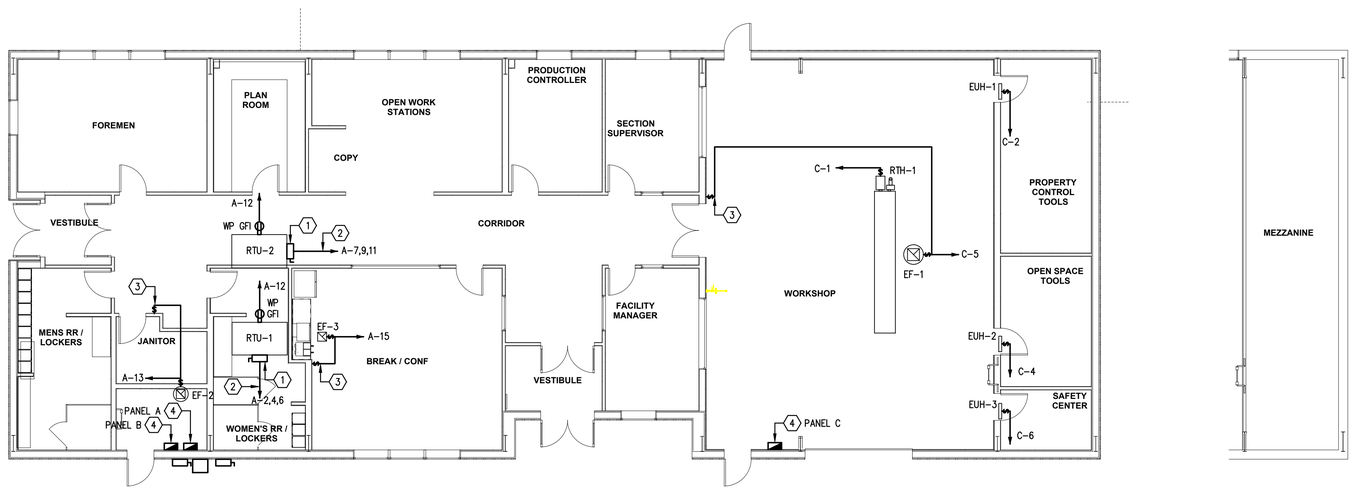

1 POWER PLAN MECHANICAL EQUIPMENT
SCALE: 1/8"=1'-0"

GENERAL NOTES

A FOR POWER RISER DIAGRAM SEE SHEET E-401.

B FOR CONDUCTOR SIZES SEE SHEETS E-101, E-201, E-301 AND E-401.

C FOR GROUNDING CONDUCTOR SIZES SEE SHEETS E-101, E-201, E-301 AND E-401.

D FOR METHOD OF GROUNDING SEE SHEETS E-401 AND ELECTRICAL SPECIFICATIONS.

E FOR LOAD CALCULATIONS SEE SHEET E-501.

F FOR FAULT CURRENT CALCULATIONS SEE SHEET E-401.

G FOR DISCONNECT SIZES AND LOCATIONS SEE SHEETS E-101, E-201 AND E-401.

H FOR PANEL SCHEDULE SEE SHEET E-501.

I FOR WIRING METHODS SEE ELECTRICAL SPECIFICATIONS.

J FOR IECC LIGHTING BUDGET CALCULATIONS SEE SHEET E-601.

K FOR ELECTRICAL LEGEND SEE SHEET E-701.

L FOR ELECTRICAL SPECIFICATIONS SEE ELECTRICAL SPECIFICATION BOOK.

M CONDUITS ARE 1/2" UNLESS INDICATED OTHERWISE.

N CONDUCTORS ARE #12 THHN/THWN, COPPER UNLESS INDICATED OTHERWISE.

P PROVIDE UL LISTED FIRE STOP ASSEMBLY FOR CONDUIT PENETRATIONS THROUGH FIRE RATED CEILINGS, FLOORS, WALLS AND PARTITIONS.

Q MC CABLE MAY BE USED WHERE ALLOWED BY CODE.

R FOR LIGHTING FIXTURE SCHEDULE SEE

S INSTALL BURIED CONDUIT A MINIMUM OF 24 INCHES BELOW GRADE.

T BACK FILL ELECTRICAL CONDUIT TRENCHES WITH ENGINEERED FILL.

U PLACE BACKFILL AND FILL MATERIALS IN LAYERS NOT MORE THAN 8 INCHES IN LOOSE DEPTH FOR MATERIAL COMPACTED BY HEAVY COMPACTION EQUIPMENT AND NOT MORE THAN 4 INCHES IN LOOSE DEPTH FOR MATERIAL COMPACTED BY HAND-OPERATED TAMPERS.

V COMPACT ELECTRICAL CONDUIT TRENCHES TO 95%.

W INSTALL ELECTRICAL WARNING TAPE 12" ABOVE EACH CONDUIT.

X LABEL PANELBOARDS, DISCONNECTS, SWITCHES, RECEPTACLES AND J-BOXES WITH PANEL DESIGNATION AND CIRCUIT NUMBERS.

KEYED NOTES

1 DISCONNECT, 30 AMP, 208 VOLT, 3-PHASE, 3-WIRE, WITH GROUND, FUSIBLE, NEMA 3R. FUSE ACCORDING TO EQUIPMENT INSTALLATION INSTRUCTIONS. MAINTAIN PROPER WORKING SPACE. LABEL WITH PANEL DESIGNATION AND CIRCUIT NUMBER.

2 1/2" C, (3) #10, (1) #10 G, THHN/THWN2, COPPER.

3 SWITCH, MOTOR RATED, 20 AMP, 120 VOLT, WITH PILOT LIGHT . PROVIDE ENGRAVED NAME PLATE "EXHAUST FAN".

4 PANELBOARD, MAINTAIN PROPER WORKING SPACE. FOR ADDITIONAL INFORMATION SEE POWER RISER DIAGRAM AND PANEL SCHEDULE.

BAER ARCHITECTURE NM LLC

Baer Architecture NM
227 East Palace Avenue Suite C
Santa Fe, NM 87501
505.470.6835
allanbaer@comcast.net

McCLAIN + YU
ARCHITECTURE & DESIGN

McClain + Yu Architecture & Design
2009 Ridgecrest Dr SE
Albuquerque, NM 87108
505.266.2142
info@mcclain-yu.com
www.mcclain-yu.com

CONSULTANTS

Tarleton Engineering Inc.
MECHANICAL • ELECTRICAL • PLUMBING
910 RIO VISTA CIR. SW
ALBUQUERQUE, NEW MEXICO 87105
Tel: (505) 263-6704
charling@tarenginc.com

GLEN M. TARLETON
NEW MEXICO
6601
REGISTERED PROFESSIONAL ENGINEER
2-20-18

PROJECT

SANTA FE COUNTY
PUBLIC WORKS
DEPARTMENT
PROPERTY CONTROL
FACILITY

ADDRESS

424 NM 599
SANTA FE, NM 87507

Date
Project Number
Project File
Drawn By
Checked By

Copyright ©
MCCLAIN + YU ARCHITECTURE AND DESIGN

SHEET TITLE

POWER PLAN
MECHANICAL
EQUIPMENT

E-202

SHEET OF

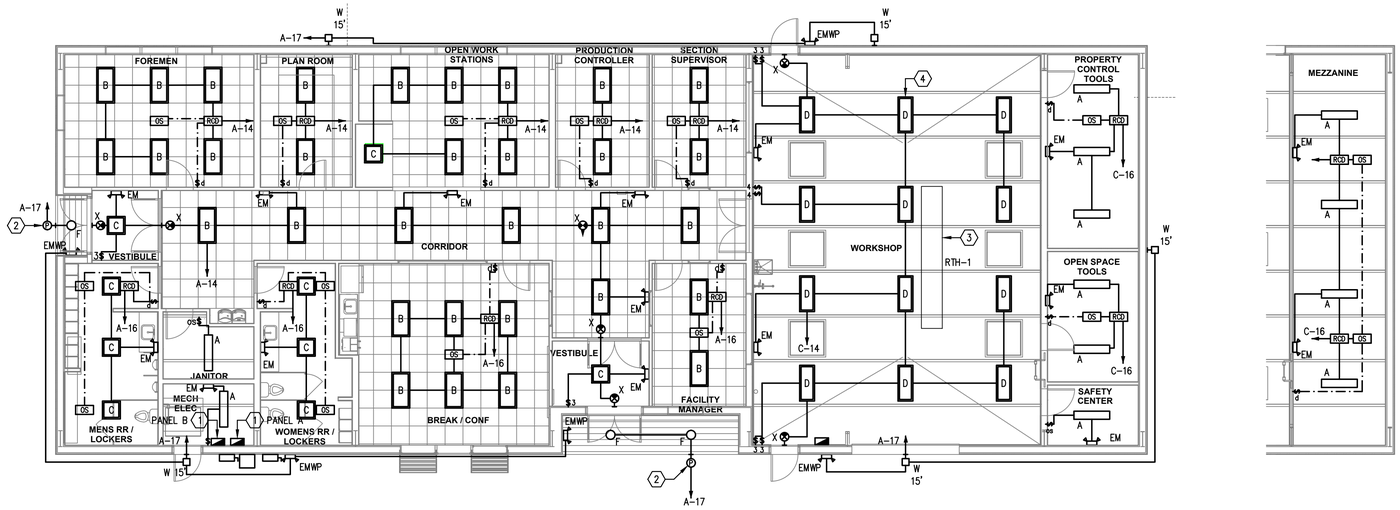

1 LIGHTING PLAN
SCALE: 1/8"=1'-0"

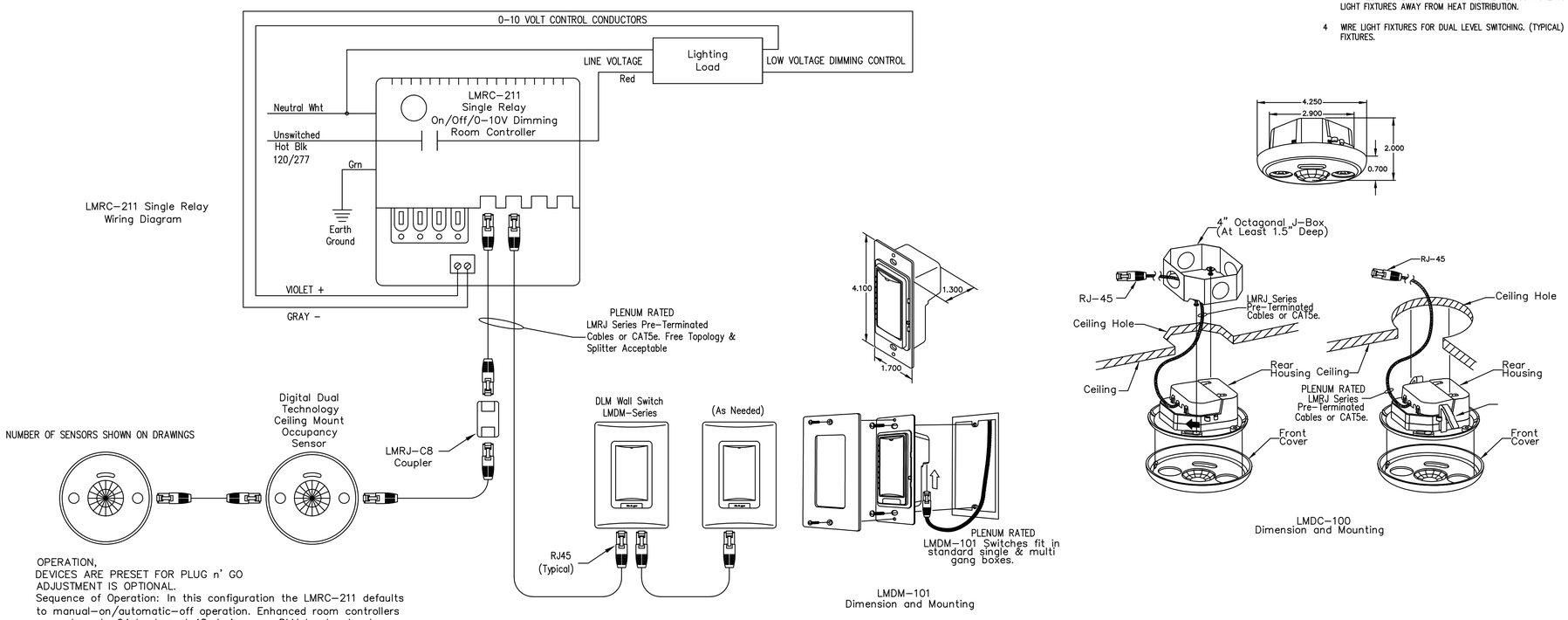

OPERATION,
DEVICES ARE PRESET FOR PLUG n' GO
ADJUSTMENT IS OPTIONAL.
Sequence of Operation: In this configuration the LMRC-211 defaults to manual-on/automatic-off operation. Enhanced room controllers support up to 64 loads and 48 devices per DLM local network.
For full operational details, adjustments and more features of the product, see the DLM System Installation Guide at www.wattstopper.com

A LIGHTING CONTROL DETAIL
SCALE: NOT TO SCALE

GENERAL NOTES

A FOR POWER RISER DIAGRAM SEE SHEET E-401.

B FOR CONDUCTOR SIZES SEE SHEETS E-101, E-201, E-301 AND E-401.

C FOR GROUNDING CONDUCTOR SIZES SEE SHEETS E-101, E-201, E-301 AND E-401.

D FOR METHOD OF GROUNDING SEE SHEETS E-401 AND ELECTRICAL SPECIFICATIONS.

E FOR LOAD CALCULATIONS SEE SHEET E-501.

F FOR FAULT CURRENT CALCULATIONS SEE SHEET E-401.

G FOR DISCONNECT SIZES AND LOCATIONS SEE SHEETS E-101, E-201 AND E-401.

H FOR PANEL SCHEDULE SEE SHEET E-501.

I FOR WIRING METHODS SEE ELECTRICAL SPECIFICATIONS.

J FOR IECC LIGHTING BUDGET CALCULATIONS SEE SHEET E-601.

K FOR ELECTRICAL LEGEND SEE SHEET E-701.

L FOR ELECTRICAL SPECIFICATIONS SEE ELECTRICAL SPECIFICATION BOOK.

M CONDUITS ARE 1/2" UNLESS INDICATED OTHERWISE.

N CONDUCTORS ARE #12 THHN/THWN, COPPER UNLESS INDICATED OTHERWISE.

P PROVIDE UL LISTED FIRE STOP ASSEMBLY FOR CONDUIT PENETRATIONS THROUGH FIRE RATED CEILINGS, FLOORS, WALLS AND PARTITIONS.

Q MC CABLE MAY BE USED WHERE ALLOWED BY CODE.

R FOR LIGHTING FIXTURE SCHEDULE SEE

S INSTALL BURIED CONDUIT A MINIMUM OF 24 INCHES BELOW GRADE.

T BACK FILL ELECTRICAL CONDUIT TRENCHES WITH ENGINEERED FILL.

U PLACE BACKFILL AND FILL MATERIALS IN LAYERS NOT MORE THAN 8 INCHES IN LOOSE DEPTH FOR MATERIAL COMPACTED BY HEAVY COMPACTION EQUIPMENT AND NOT MORE THAN 4 INCHES IN LOOSE DEPTH FOR MATERIAL COMPACTED BY HAND-OPERATED TAMPERS.

V COMPACT ELECTRICAL CONDUIT TRENCHES TO 95%.

W INSTALL ELECTRICAL WARNING TAPE 12" ABOVE EACH CONDUIT.

X LABEL PANELBOARDS, DISCONNECTS, SWITCHES, RECEPTACLES AND J-BOXES WITH PANEL DESIGNATION AND CIRCUIT NUMBERS.

KEYED NOTES

1 PANELBOARD. FOR ADDITIONAL INFORMATION SEE POWER RISER DIAGRAM AND PANEL SCHEDULE.

2 PHOTO CELL.

3 RADIANT TUBE HEATER. COORDINATE INSTALLATION OF LIGHT FIXTURES WITH MECHANICAL CONTRACTOR. AVOID HEATER COMPONENTS AND INSTALL LIGHT FIXTURES AWAY FROM HEAT DISTRIBUTION.

4 WIRE LIGHT FIXTURES FOR DUAL LEVEL SWITCHING. (TYPICAL) FOR TYPE D FIXTURES.

BAER ARCHITECTURE NM LLC
Baer Architecture NM
227 East Palace Avenue Suite C
Santa Fe, NM 87501
505.470.6835
allanbaer@comcast.net

McCLAIN + YU
ARCHITECTURE & DESIGN
McClain + Yu Architecture & Design
2009 Ridgecrest Dr SE
Albuquerque, NM 87108
505.266.2142
info@mcclain-yu.com
www.mcclain-yu.com

CONSULTANTS

Tarleton Engineering Inc.
MECHANICAL • ELECTRICAL • PLUMBING
910 RIO VISTA CIR. SW
ALBUQUERQUE, NEW MEXICO 87105
Tel: (505) 263-6704
charling@tarenginc.com

GLEN M. TARLETON
NEW MEXICO
6601
REGISTERED PROFESSIONAL ENGINEER
11/29/17

PROJECT

SANTA FE COUNTY
PUBLIC WORKS
DEPARTMENT
PROPERTY CONTROL
FACILITY

ADDRESS

424 NM 599
SANTA FE, NM 87507

Date
Project Number
Project File
Drawn By
Checked By

Copyright ©
MCCLAIN + YU ARCHITECTURE AND DESIGN

SHEET TITLE

LIGHTING
PLAN

SHEET E-301 OF

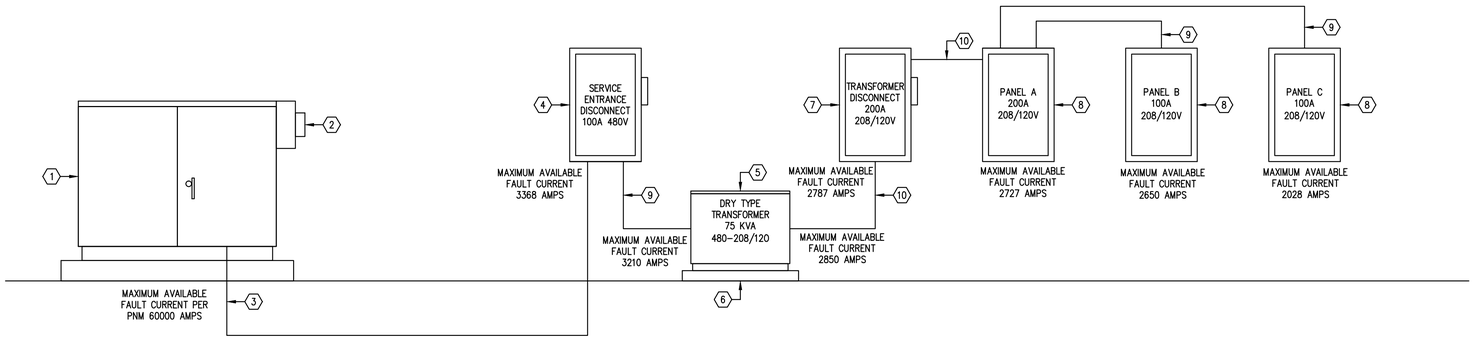

1 POWER RISER DIAGRAM
SCALE: NOT TO SCALE

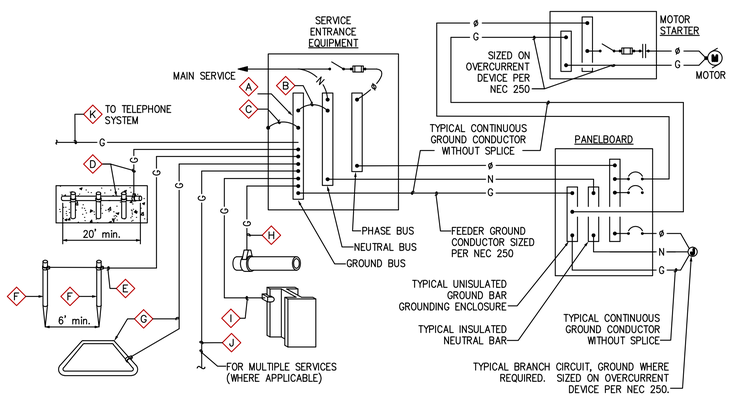

GROUNDING SYSTEM DIAGRAM

GROUNDING SYSTEM GENERAL NOTES

1 THE GROUNDING ELECTRODE SYSTEM SHALL CONSIST OF ITEMS A, B, C, D, E, F AND G WHERE APPLICABLE.

2 ITEMS H , I AND J MUST BE BONDED TOGETHER AND TO THE GROUNDING ELECTRODE SYSTEM WHEN THEY ARE PRESENT.

3 ITEM D ,CONCRETE ENCASED ELECTRODE (UFER) SHALL HAVE UFER SUPPORT CONSISTING OF 5/8" x 10' COPPER GROUND ROD CUT INTO 2' SECTIONS AND DRIVEN FOR SUPPORT OF UFER CONDUCTOR. ONLY COPPER TO COPPER CONNECTIONS ARE ACCEPTABLE. DO NOT USE RE-BAR FOR UFER SUPPORT. (THIS IS TO AVOID THE HARMFUL EFFECTS OF DISSIMILAR METALS IN CONTACT.) A U.L. LISTED COPPER TO RE-BAR CLAMP (SUCH AS GRAVES "JONES BOND" SYSTEM) IS AN APPROVED ALTERNATIVE.

4 THIS DETAIL IS PROVIDED IN ACCORDANCE WITH THE NATIONAL ELECTRICAL CODE, ARTICLE 250, PERTAINING TO THE "GROUNDING ELECTRODE SYSTEM".

5 ALL SPLICING SHALL BE ACCOMPLISHED VIA EXOTHERMIC WELD (CAD-WELD) OR COMPRESSION CONNECTIONS.

6 ALL CONDUCTOR SIZING INDICATED ON THE GROUNDING SCHEDULE ARE FOR COPPER CONDUCTORS. ALUMINUM IS NOT PERMITTED.

7 ANY VARIANCES FROM THIS DIAGRAM AND ASSOCIATED SCHEDULE AND NOTES MUST BE REQUESTED AND APPROVED IN WRITING PRIOR TO INSTALLATION.

8 ALL INSTALLATIONS SHALL COMPLY WITH THE LATEST ADOPTED EDITION OF N.E.C. ARTICLE 250 (ALL SUBPARAGRAPHS) AND ALL STATE AND LOCAL REQUIREMENTS.

GROUNDING SCHEDULE

	A FACTORY INSTALLED GROUND BUS BAR	B INTEGRATED BUS BAR MAIN BOND JUMPER	C INTEGRATED BUS BAR CASE BOND JUMPER	D CONCRETE ENCASED ELECTRODE (UFER)	E GROUNDING ELECTRODE CONDUCTOR TO ROD, PIPE OR PLATE	F CU or CU-CLAD STEEL GROUND ROD	G COPPER GROUND RING CONDUCTOR	H METALLIC PIPING BONDING CONDUCTOR	I BUILDING STEEL BONDING CONDUCTOR	J MULTIPLE SERVICE BONDING CONDUCTOR	K TELEPHONE SYSTEM GROUNDING CONDUCTOR
CODE REFERENCE / AMPACITY		N.E.C. 250.102	N.E.C. 250.102	N.E.C. 250.50(c) 250.66(b)	N.E.C. 250.52(c) 250.52(d) 250.66(a)	N.E.C. 250.52(c)(2)	N.E.C. 250.50(d) 250.66(c)	N.E.C. 250.104A 250.66	N.E.C. 250.50(b) 250.66	N.E.C. 250.66	
200 AMP	SHALL BE SIZED TO ACCOMMODATE ALL GROUND WIRE LUGS AS INDICATED ON GROUNDING DIAGRAM AND/OR REFERENCED ELSEWHERE ON PLANS OR SPECIFICATIONS	#4	#4	#4	#6	5/8"x8'	#2	#4	#4	#4	#6
225 AMP		#2	#2	#4	#6	5/8"x8'	#2	#2	#2	#2	#6
400 AMP		#1/0	#1/0	#4	#6	5/8"x8'	#1/0	#1/0	#1/0	#1/0	#6
600 AMP		#2/0	#2/0	#4	#6	5/8"x8'	#2/0	#2/0	#2/0	#2/0	#6
800 AMP		#3/0	#3/0	#4	#6	5/8"x8'	#2/0	#2/0	#2/0	#2/0	#6
1000 AMP		#3/0	#3/0	#4	#6	5/8"x8'	#3/0	#3/0	#3/0	#3/0	#6
1200 AMP		250kcMIL	250kcMIL	#4	#6	5/8"x8'	#3/0	#3/0	#3/0	#3/0	#6
1600 AMP		350kcMIL	350kcMIL	#4	#6	5/8"x8'	#3/0	#3/0	#3/0	#3/0	#6
2000 AMP		400kcMIL	400kcMIL	#4	#6	5/8"x8'	#3/0	#3/0	#3/0	#3/0	#6
2500 AMP		500kcMIL	500kcMIL	#4	#6	5/8"x8'	#3/0	#3/0	#3/0	#3/0	#6
3000 AMP		500kcMIL	500kcMIL	#4	#6	5/8"x8'	#3/0	#3/0	#3/0	#3/0	#6

A GROUNDING DETAILS
SCALE: NOT TO SCALE

GENERAL NOTES

A FOR POWER RISER DIAGRAM SEE SHEET E-401.

B FOR CONDUCTOR SIZES SEE SHEETS E-101, E-201, E-301 AND E-401.

C FOR GROUNDING CONDUCTOR SIZES SEE SHEETS E-101, E-201, E-301 AND E-401.

D FOR METHOD OF GROUNDING SEE SHEETS E-401 AND ELECTRICAL SPECIFICATIONS.

E FOR LOAD CALCULATIONS SEE SHEET E-501.

F FOR FAULT CURRENT CALCULATIONS SEE SHEET E-401.

G FOR DISCONNECT SIZES AND LOCATIONS SEE SHEETS E-101, E-201 AND E-401.

H FOR PANEL SCHEDULE SEE SHEET E-501.

I FOR WIRING METHODS SEE ELECTRICAL SPECIFICATIONS.

J FOR IECC LIGHTING BUDGET CALCULATIONS SEE SHEET E-601.

K FOR ELECTRICAL LEGEND SEE SHEET E-701.

L FOR ELECTRICAL SPECIFICATIONS SEE ELECTRICAL SPECIFICATION BOOK.

M CONDUITS ARE 1/2" UNLESS INDICATED OTHERWISE.

N CONDUCTORS ARE #12 THHN/THWN, COPPER UNLESS INDICATED OTHERWISE.

P PROVIDE UL LISTED FIRE STOP ASSEMBLY FOR CONDUIT PENETRATIONS THROUGH FIRE RATED CEILINGS, FLOORS, WALLS AND PARTITIONS.

Q MC CABLE MAY BE USED WHERE ALLOWED BY CODE.

R FOR LIGHTING FIXTURE SCHEDULE SEE

S INSTALL BURIED CONDUIT A MINIMUM OF 24 INCHES BELOW GRADE.

T BACK FILL ELECTRICAL CONDUIT TRENCHES WITH ENGINEERED FILL.

U PLACE BACKFILL AND FILL MATERIALS IN LAYERS NOT MORE THAN 8 INCHES IN LOOSE DEPTH FOR MATERIAL COMPACTED BY HEAVY COMPACTION EQUIPMENT AND NOT MORE THAN 4 INCHES IN LOOSE DEPTH FOR MATERIAL COMPACTED BY HAND-OPERATED TAMPERS.

V COMPACT ELECTRICAL CONDUIT TRENCHES TO 95%.

W INSTALL ELECTRICAL WARNING TAPE 12" ABOVE EACH CONDUIT.

X LABEL PANELBOARDS, DISCONNECTS, SWITCHES, RECEPTACLES AND J-BOXES WITH PANEL DESIGNATION AND CIRCUIT NUMBERS.

KEYED NOTES

1 EXISTING UTILITY TRANSFORMER, 480/277 VOLT SECONDARY.

2 EXISTING UTILITY METERING.

3 2" C, (4) ⅛ THHN/THWN2, COPPER. (SIZED FOR VOLTAGE DROP).

4 SERVICE ENTRANCE DISCONNECT. 100 AMP, 480 VOLT, 3-PHASE, 3-WIRE WITH GROUND, FUSIBLE, NEMA 3R, SERVICE ENTRANCE RATED. FUSE AT 100 AMPS WITH DUAL ELEMENT, TIME DELAY, CURRENT LIMITING, RK1 FUSES. BOND GROUND BUS TO NEUTRAL BUS. MAINTAIN PROPER WORKING SPACE. LABEL AS SERVICE ENTRANCE DISCONNECT.

5 DRY TYPE TRANSFORMER, 75 KVA, 480-208/120 VOLT, 3-PHASE, 4-WIRE, COPPER WINDINGS, (6)-TAPS, WITH RAIN-SHIELD. BOND GROUND BUS TO NEUTRAL BUS, TRANSFORMER HOUSING, GROUND ROD AND BUILDING STEEL.

6 HOUSE KEEPING PAD.

7 TRANSFORMER DISCONNECT, 200 AMP, 208/120V, 3-PHASE, 4-WIRE, WITH GROUND, FUSIBLE, NEMA 3R, FUSE AT 200 AMPS WITH DUAL ELEMENT, TIME DELAY, CURRENT LIMITING, RK1 FUSES. MAINTAIN PROPER WORKING SPACE.

8 PANELBOARD. FOR ADDITIONAL INFORMATION SEE PANEL SCHEDULE.

9 1-1/2" C, (4) #2, (1) #6 G, THHN/THWN2, COPPER.

10 2-1/2" C, (4) ⅜, (1) #6 G, THHN/THWN2, COPPER.

BAER ARCHITECTURE NM LLC

Baer Architecture NM
227 East Palace Avenue Suite C
Santa Fe, NM 87501
505.470.6835
allanbaer@comcast.net

McCLAIN + YU
ARCHITECTURE & DESIGN

McClain + Yu Architecture & Design
2009 Ridgecrest Dr SE
Albuquerque, NM 87108
505.266.2142
info@mcclain-yu.com
www.mcclain-yu.com

CONSULTANTS

Tarleton Engineering Inc.
MECHANICAL • ELECTRICAL • PLUMBING
910 RIO VISTA CIR. SW
ALBUQUERQUE, NEW MEXICO 87105
Tel: (505) 263-6704
charling@tarenginc.com

GLEN M. TARLETON
NEW MEXICO
(6601)
REGISTERED PROFESSIONAL ENGINEER
11/29/17

PROJECT

SANTA FE COUNTY
PUBLIC WORKS
DEPARTMENT
PROPERTY CONTROL
FACILITY

ADDRESS

424 NM 599
SANTA FE, NM 87507

Date
Project Number
Project File
Drawn By
Checked By

Copyright ©
MCCLAIN + YU ARCHITECTURE AND DESIGN

SHEET TITLE

POWER RISER DIAGRAM AND GROUNDING DETAILS

SHEET E-401 OF

PANEL A			208/120V			3-PHASE, 4-WIRE		200 AMP MAIN LUGS ONLY			10KAIC		SURFACE MOUNT		TOP FEED NEMA 1		
CKT#	BKR	DESCRIPTION	LTG	K/EQ	REC	HVAC	OTHER	A	B	C	OTHER	HVAC	REC	K/EQ	LTG	DESCRIPTION	BKR	CKT#
1			0	800	5220	0	0	6020 2160				2160						2
3	100/3	PANEL B	0	0	4320	0	0		4320 2160			2160				RTU-1	30/3	4
5			0	0	3512	0	0			3512 2160		2160						6
7						2160		2160 667				667				EF-1	20/1	8
9	30/3	RTU-2				2160			2160 912		912					EWC-1 AND EWC-2	20/1	10
11						2160				2160 360			360			REC ROOF	20/1	12
13	20/1	EF-2				667		667 964							964	LTG OFFICE AREA NORTH	20/1	14
15	20/1	EF-3				113			113 622						622	LTG OFFICE AREA SOUTH	20/1	16
17	20/1	LTG EXTERIOR BUILDING MOUNT	154							154 670					670	LIGHTING SITE	20/1	18
19	20/1	REC COVERED VEHICLE STORAGE			90			90 0								SPARE	20/1	20
21	20/1	SPARE							0 0							SPARE	20/1	22
23	20/1	SPARE								0 0						SPARE	20/1	24
25	20/1	SPARE						0 0								SPARE	20/1	26
27	20/1	SPARE							0 0							SPARE	20/1	28
29	20/1	SPARE								0 0						SPARE	20/1	30
31	20/1	SPARE						0 0								SPARE	20/1	32
33	20/1	SPARE							0 0							SPARE	20/1	34
35	20/1	SPARE								0 0						SPARE	20/1	36
37			1380	0	720	1532	0	3632 0								SPARE	20/1	38
39	100/3	PANEL C	380	0	540	860	0		1780 0							SPARE	20/1	40
41			0	0	360	2107	0			2467 0						SPARE	20/1	42
TOTAL			1914	800	14762	11759	0	16360	12067	11483	912	7147	360	0	2256			

	LTG	KITCH	REC	HVAC	OTHER						
PHASE A	2344	800	6030	7186	0	16360			CONNECTED LOAD	39910	VA
PHASE B	1002	0	4860	5293	912		12067		CONNECTED LOAD	111	AMPS
PHASE C	824	0	4232	6427	0			11483	CALCULATED LOAD	40673	
									CALCULATED LOAD	113	AMPS

LD=LOCKING DEVICE

PANEL B			208/120V			3-PHASE, 4-WIRE		100 AMP MAIN LUGS ONLY				10KAIC		SURFACE MOUNT		TOP FEED NEMA 1		
CKT#	BKR	DESCRIPTION	LTG	K/EQ	REC	HVAC	OTHER	A	B	C	OTHER	HVAC	REC	K/EQ	LTG	DESCRIPTION	BKR	CKT#
1	20/1	REC FOREMAN'S OFFICE			1080			1080 900					900			REC PLAN ROOM	20/1	2
3	20/1	REC FOREMAN'S OFFICE			1080				1080 180				180			REC COPY	20/1	4
5	20/1	REC OPEN WORKSTATIONS			720					720 180			180			REC COPY	20/1	6
7	20/1	REC OPEN WORKSTATIONS			720			720 1080					1080			REC PRODUCTION CONTROLLER	20/1	8
9	20/1	REC SECTION SUPERVISOR			1080				1080 900				900			REC FACILITY MANAGER	20/1	10
11	20/1	REC BREAK ROOM			720					720 900			900			REC VESTIBULE SOUTH	20/1	12
13	20/1	REC BREAK ROOM			720			720 800						800		REC REFRIGERATOR BREAK ROOM	20/1	14
15	20/1	REC COUNTER BREAK ROOM			180				180 180				180			REC WOMEN'S RESTROOM	20/1	16
17	20/1	REC COUNTER BREAK ROOM			180					180 632			632			WATER COOLERS	20/1	18
19	20/1	REC JANITOR			540			540 180					180			REC MEN'S RESTROOM	20/1	20
21	20/1	TELEPHONE BOARD			180				180 540				540			REC VESTIBULE WEST	20/1	22
23	20/1	TELEPHONE BOARD			180					180 0						SPARE	20/1	24
25	20/1	SPARE						0 0								SPARE	20/1	26
27	20/1	SPARE							0 0							SPARE	20/1	28
29	20/1	SPARE								0 0						SPARE	20/1	30
31	20/1	SPARE						0 0								SPARE	20/1	32
33	20/1	SPARE							0 0							SPARE	20/1	34
35	20/1	SPARE								0 0						SPARE	20/1	36
37	20/1	SPARE						0 0								SPARE	20/1	38
39	20/1	SPARE							0 0							SPARE	20/1	40
41	20/1	SPARE								0 0						SPARE	20/1	42
TOTAL			0	0	7380	0	0	6020	4320	3512	0	0	5672	800	0			

	LTG	KITCH	REC	HVAC	OTHER						
PHASE A	0	800	5220	0	0	6020			CONNECTED LOAD	13852	VA
PHASE B	0	0	4320	0	0		4320		CONNECTED LOAD	38	AMPS
PHASE C	0	0	3512	0	0			3512	CALCULATED LOAD	13572	
									CALCULATED LOAD	38	AMPS

LD=LOCKING DEVICE

PANEL C			208/120V			3-PHASE, 4-WIRE		100 AMP MAIN LUGS ONLY				10KAIC		SURFACE MOUNT		TOP FEED NEMA 1		
CKT#	BKR	DESCRIPTION	LTG	K/EQ	REC	HVAC	OTHER	A	B	C	OTHER	HVAC	REC	K/EQ	LTG	DESCRIPTION	BKR	CKT#
1	20/1	RTH-1				312		312 500				500				EUH-1	20/1	2
3	20/1	SPARE							0 500			500				EUH-2	20/1	4
5	20/1	EF-1				667				667 540		540				EUH-3	20/1	6
7	20/1	REC WORKSHIOP SW			540			540 720				720				REC WORKSHOP SE	20/1	8
9	20/1	REC WORKSHOP NW			360				360 360			360				REC WORKSHOP NE	20/1	10
11	20/1	CORD REEL WORKSHOP SW			180					180 900		900				REC TOOL ROOM AND MEZ	20/1	12
13	20/1	CORD REEL WORKSHOP SE			180			180 1380							1380	LTG WORKSHOP	20/1	14
15	20/1	CORD REEL WORKSHOP NE			180				180 380						380	LTG TOOLS AND MEZZANINE	20/1	16
17	20/1	CORD REEL WORKSHOP NE			180					180 0						SPARE	20/1	18
19	20/1	SPARE						0 0								SPARE	20/1	20
21	20/1	SPARE							0 0							SPARE	20/1	22
23	20/1	SPARE								0 0						SPARE	20/1	24
25	20/1	SPARE						0 0								SPARE	20/1	26
27	20/1	SPARE							0 0							SPARE	20/1	28
29	20/1	SPARE								0 0						SPARE	20/1	30
31	20/1	SPARE						0 0								SPARE	20/1	32
33	20/1	SPARE							0 0							SPARE	20/1	34
35	20/1	SPARE								0 0						SPARE	20/1	36
37	20/1	SPARE						0 0								SPARE	20/1	38
39	20/1	SPARE							0 0							SPARE	20/1	40
41	20/1	SPARE								0 0						SPARE	20/1	42
TOTAL			0	0	1620	979	0	3632	1780	2467	0	3520	0	0	1760			

	LTG	KITCH	REC	HVAC	OTHER						
PHASE A	1380	0	720	1532	0	3632			CONNECTED LOAD	7879	VA
PHASE B	380	0	540	860	0		1780		CONNECTED LOAD	22	AMPS
PHASE C	0	0	360	2107	0			2467	CALCULATED LOAD	8319	
									CALCULATED LOAD	23	AMPS

LD=LOCKING DEVICE

GENERAL NOTES

A FOR POWER RISER DIAGRAM SEE SHEET E-401.

B FOR CONDUCTOR SIZES SEE SHEETS E-101, E-201, E-301 AND E-401.

C FOR GROUNDING CONDUCTOR SIZES SEE SHEETS E-101, E-201, E-301 AND E-401.

D FOR METHOD OF GROUNDING SEE SHEETS E-401 AND ELECTRICAL SPECIFICATIONS.

E FOR LOAD CALCULATIONS SEE SHEET E-501.

F FOR FAULT CURRENT CALCULATIONS SEE SHEET E-401.

G FOR DISCONNECT SIZES AND LOCATIONS SEE SHEETS E-101, E-201 AND E-401.

H FOR PANEL SCHEDULE SEE SHEET E-501.

I FOR WIRING METHODS SEE ELECTRICAL SPECIFICATIONS.

J FOR IECC LIGHTING BUDGET CALCULATIONS SEE SHEET E-601.

K FOR ELECTRICAL LEGEND SEE SHEET E-701.

L FOR ELECTRICAL SPECIFICATIONS SEE ELECTRICAL SPECIFICATION BOOK.

M CONDUITS ARE 1/2" UNLESS INDICATED OTHERWISE.

N CONDUCTORS ARE #12 THHN/THWN, COPPER UNLESS INDICATED OTHERWISE.

P PROVIDE UL LISTED FIRE STOP ASSEMBLY FOR CONDUIT PENETRATIONS THROUGH FIRE RATED CEILINGS, FLOORS, WALLS AND PARTITIONS.

Q MC CABLE MAY BE USED WHERE ALLOWED BY CODE.

R FOR LIGHTING FIXTURE SCHEDULE SEE

S INSTALL BURIED CONDUIT A MINIMUM OF 24 INCHES BELOW GRADE.

T BACK FILL ELECTRICAL CONDUIT TRENCHES WITH ENGINEERED FILL.

U PLACE BACKFILL AND FILL MATERIALS IN LAYERS NOT MORE THAN 8 INCHES IN LOOSE DEPTH FOR MATERIAL COMPACTED BY HEAVY COMPACTION EQUIPMENT AND NOT MORE THAN 4 INCHES IN LOOSE DEPTH FOR MATERIAL COMPACTED BY HAND-OPERATED TAMPERS.

V COMPACT ELECTRICAL CONDUIT TRENCHES TO 95%.

W INSTALL ELECTRICAL WARNING TAPE 12" ABOVE EACH CONDUIT.

X LABEL PANELBOARDS, DISCONNECTS, SWITCHES, RECEPTACLES AND J-BOXES WITH PANEL DESIGNATION AND CIRCUIT NUMBERS.

REVISIONS

1 REVIEW COMMENTS 2-20-18 — 2-20-18

BAER ARCHITECTURE NM LLC

Baer Architecture NM
227 East Palace Avenue Suite C
Santa Fe, NM 87501
505.470.6835
allanbaer@comcast.net

McCLAIN + YU ARCHITECTURE & DESIGN

McClain + Yu Architecture & Design
2009 Ridgecrest Dr SE
Albuquerque, NM 87108
505.266.2142
info@mcclain-yu.com
www.mcclain-yu.com

CONSULTANTS

Tarleton Engineering Inc.
MECHANICAL • ELECTRICAL • PLUMBING
910 RIO VISTA CIR. SW
ALBUQUERQUE, NEW MEXICO 87105
Tel: (505) 263-6704
charling@tarenginc.com

GLEN M. TARLETON NEW MEXICO 6601 REGISTERED PROFESSIONAL ENGINEER
2-20-18

PROJECT

SANTA FE COUNTY PUBLIC WORKS DEPARTMENT

PROPERTY CONTROL FACILITY

ADDRESS

424 NM 599
SANTA FE, NM 87507

Date
Project Number
Project File
Drawn By
Checked By

Copyright ©
MCCLAIN + YU ARCHITECTURE AND DESIGN

SHEET TITLE

PANEL SCHEDULES AND LOAD CALCULATIONS

E-501

SHEET OF

COM*check* Software Version 3.9.2

Interior Lighting Compliance Certificate

2009 IECC

Section 1: Project Information

Project Type: **New Construction**
Project Title : SANTA FE COUNTY PROPERTY CONTROL

Construction Site: 424 NM 599 ANTA FE, NM 87507
Owner/Agent:
Designer/Contractor:

Section 2: Interior Lighting and Power Calculation

A Area Category	B Floor Area (ft2)	C Allowed Watts / ft2	D Allowed Watts (B x C)
OFFICE AREA (Office)	3380	1	3380
WORKSHOP AREA (Workshop)	1396	1.4	1954
STORAGE (Warehouse)	884	0.8	707
		Total Allowed Watts =	6042

Section 3: Interior Lighting Fixture Schedule

A Fixture ID : Description / Lamp / Wattage Per Lamp / Ballast	B Lamps/ Fixture	C # of Fixtures	D Fixture Watt.	E (C X D)
OFFICE AREA (Office 3380 sq.ft.)				
LED 1: A: SURFACE MOUNT: Other:	1	2	38	76
LED 2: B: 2X4 LAY-IN: Other:	2	32	40.6	1299.2
LED 3: C: 2X2 LAY-IN: Other:	2	3	30.2	90.6
LED 6: X: EXIT: Other: Exemption:Exit Signs, Safety or Emergency Lighting	1	5	2	Exempt
LED 7: EM: EMERGENCY: Other: Exemption:Exit Signs, Safety or Emergency Lighting	1	9	2	Exempt
WORKSHOP AREA (Workshop 1396 sq.ft.)				
LED 4: D: HIGH-BAY: Other:	1	12	115	1380
LED 8: X: EXIT: Other: Exemption:Exit Signs, Safety or Emergency Lighting	1	2	2	Exempt
LED 9: EM: EMERGENCY: Other: Exemption:Exit Signs, Safety or Emergency Lighting	2	2	2	Exempt
STORAGE (Warehouse 884 sq.ft.)				
LED 5: A: SURFACE MOUNT: Other:	1	10	38	380
LED 10: EM: EMERGENCY: Other: Exemption:Exit Signs, Safety or Emergency Lighting	2	4	2	Exempt
			Total Proposed Watts =	3226

Section 4: Requirements Checklist

Interior Lighting PASSES: Design 47% better than code.

Lighting Wattage:

☐ 1. Total proposed watts must be less than or equal to total allowed watts.

Allowed Watts	Proposed Watts	Complies
6042	3226	YES

Controls, Switching, and Wiring:

☐ 2. Daylight zones under skylights more than 15 feet from the perimeter have lighting controls separate from daylight zones adjacent to vertical fenestration.
☐ 3. Daylight zones have individual lighting controls independent from that of the general area lighting.

Exceptions:

☐ Contiguous daylight zones spanning no more than two orientations are allowed to be controlled by a single controlling device.
☐ Daylight spaces enclosed by walls or ceiling height partitions and containing two or fewer light fixtures are not required to have a separate switch for general area lighting.

☐ 4. Independent controls for each space (switch/occupancy sensor).

Exceptions:

☐ Areas designated as security or emergency areas that must be continuously illuminated.
☐ Lighting in stairways or corridors that are elements of the means of egress.

☐ 5. Master switch at entry to hotel/motel guest room.
☐ 6. Individual dwelling units separately metered.
☐ 7. Medical task lighting or art/history display lighting claimed to be exempt from compliance has a control device independent of the control of the nonexempt lighting.
☐ 8. Each space required to have a manual control also allows for reducing the connected lighting load by at least 50 percent by either controlling all luminaires, dual switching of alternate rows of luminaires, alternate luminaires, or alternate lamps, switching the middle lamp luminaires independently of other lamps, or switching each luminaire or each lamp.

Exceptions:

☐ Only one luminaire in space.
☐ An occupant-sensing device controls the area.
☐ The area is a corridor, storeroom, restroom, public lobby or sleeping unit.
☐ Areas that use less than 0.6 Watts/sq.ft.

☐ 9. Automatic lighting shutoff control in buildings larger than 5,000 sq.ft.

Exceptions:

☐ Sleeping units, patient care areas; and spaces where automatic shutoff would endanger safety or security.

☐ 10. Photocell/astronomical time switch on exterior lights.

Exceptions:

☐ Lighting intended for 24 hour use.

☐ 11. Tandem wired one-lamp and three-lamp ballasted luminaires (No single-lamp ballasts).

Exceptions:

☐ Electronic high-frequency ballasts; Luminaires on emergency circuits or with no available pair.

Section 5: Compliance Statement

Compliance Statement: The proposed lighting design represented in this document is consistent with the building plans, specifications and other calculations submitted with this permit application. The proposed lighting system has been designed to meet the 2009 IECC requirements in COM*check* Version 3.9.2 and to comply with the mandatory requirements in the Requirements Checklist.

CHRIS HARLING — Name - Title
Chris Harling — Signature
11/14/17 — Date

COM*check* Software Version 3.9.2

Exterior Lighting Compliance Certificate

2009 IECC

Section 1: Project Information

Project Type: **New Construction**
Project Title : SANTA FE COUNTY PROPERTY CONTROL
Exterior Lighting Zone: **2 (Light industrial area with limited nighttime use)**
Construction Site: 424 NM 599 ANTA FE, NM 87507
Owner/Agent:
Designer/Contractor:

Section 2: Exterior Lighting Area/Surface Power Calculation

A Exterior Area/Surface	B Quantity	C Allowed Watts / Unit	D Tradable Wattage	E Allowed Watts (B x C)	F Proposed Watts
PARKING AREA (Parking area)	45125 ft2	0.06	Yes	2708	893
SIDE WALK (Walkway < 10 feet wide)	243 ft of walkway length	0.7	Yes	170	52
ENTRY CANOPY (Entry canopy)	117 ft2	0.25	Yes	29	27
MAIN ENTRY (Main entry)	6 ft of door width	20	Yes	120	2
SIDE ENTRY (Other door (not main entry))	12 ft of door width	20	Yes	240	6
OVERHEAD DOOR (Other door (not main entry))	12 ft of door width	20	Yes	240	26
			Total Tradable Watts* =	3507	1006
			Total Allowed Watts =	3507	
			Total Allowed Supplemental Watts** =	600	

* Wattage tradeoffs are only allowed between tradable areas/surfaces.
** A supplemental allowance equal to 600 watts may be applied toward compliance of both non-tradable and tradable areas/surfaces.

Section 3: Exterior Lighting Fixture Schedule

A Fixture ID : Description / Lamp / Wattage Per Lamp / Ballast	B Lamps/ Fixture	C # of Fixtures	D Fixture Watt.	E (C X D)
PARKING AREA (Parking area 45125 ft2): Tradable Wattage				
LED 1: P: POLE MOUNT: Other:	1	9	57	513
LED 7: A: SURFACE MOUNT: Other:	1	10	38	380
SIDE WALK (Walkway < 10 feet wide 243 ft of walkway length): Tradable Wattage				
LED 2: W: WALL MOUNT: Other:	1	2	26	52
ENTRY CANOPY (Entry canopy 117 ft2): Tradable Wattage				
LED 3: F: RECESSED CAN: Other:	1	3	9	27
MAIN ENTRY (Main entry 6 ft of door width): Tradable Wattage				
LED 4: EMWP: EMERGENCY*: Other:	2	1	2	2
SIDE ENTRY (Other door (not main entry) 12 ft of door width): Tradable Wattage				
LED 5: EMWP: EMERGENCY: Other:	2	3	2	6
OVERHEAD DOOR (Other door (not main entry) 12 ft of door width): Tradable Wattage				
LED 6: W: WALL MOUNT: Other:	1	1	26	26
			Total Tradable Proposed Watts =	1006

Section 4: Requirements Checklist

Lighting Wattage:

☐ 1. Within each non-tradable area/surface, total proposed watts must be less than or equal to total allowed watts. Across all tradable areas/surfaces, total proposed watts must be less than or equal to total allowed watts.
Compliance: Passes.

Controls, Switching, and Wiring:

☐ 2. All exemption claims are associated with fixtures that have a control device independent of the control of the nonexempt lighting.
☐ 3. Lighting not designated for dusk-to-dawn operation is controlled by either a a photosensor (with time switch), or an astronomical time switch.
☐ 4. Lighting designated for dusk-to-dawn operation is controlled by an astronomical time switch or photosensor.
☐ 5. All time switches are capable of retaining programming and the time setting during loss of power for a period of at least 10 hours.

Exterior Lighting Efficacy:

☐ 6. All exterior building grounds luminaires that operate at greater than 100W have minimum efficacy of 60 lumen/watt.

Exceptions:

☐ Lighting that has been claimed as exempt and is identified as such in Section 3 table above.
☐ Lighting that is specifically designated as required by a health or life safety statue, ordinance, or regulation.
☐ Emergency lighting that is automatically off during normal building operation.
☐ Lighting that is controlled by motion sensor.

Section 5: Compliance Statement

Compliance Statement: The proposed exterior lighting design represented in this document is consistent with the building plans, specifications and other calculations submitted with this permit application. The proposed lighting system has been designed to meet the 2009 IECC requirements in COM*check* Version 3.9.2 and to comply with the mandatory requirements in the Requirements Checklist.

CHRIS HARLING — Name - Title
Chris Harling — Signature
11/14/17 — Date

GENERAL NOTES

A FOR POWER RISER DIAGRAM SEE SHEET E-401.
B FOR CONDUCTOR SIZES SEE SHEETS E-101, E-201, E-301 AND E-401.
C FOR GROUNDING CONDUCTOR SIZES SEE SHEETS E-101, E-201, E-301 AND E-401.
D FOR METHOD OF GROUNDING SEE SHEETS E-401 AND ELECTRICAL SPECIFICATIONS.
E FOR LOAD CALCULATIONS SEE SHEET E-501.
F FOR FAULT CURRENT CALCULATIONS SEE SHEET E-401.
G FOR DISCONNECT SIZES AND LOCATIONS SEE SHEETS E-101, E-201 AND E-401.
H FOR PANEL SCHEDULE SEE SHEET E-501.
I FOR WIRING METHODS SEE ELECTRICAL SPECIFICATIONS.
J FOR IECC LIGHTING BUDGET CALCULATIONS SEE SHEET E-601.
K FOR ELECTRICAL LEGEND SEE SHEET E-701.
L FOR ELECTRICAL SPECIFICATIONS SEE ELECTRICAL SPECIFICATION BOOK.
M CONDUITS ARE 1/2" UNLESS INDICATED OTHERWISE.
N CONDUCTORS ARE #12 THHN/THWN, COPPER UNLESS INDICATED OTHERWISE.
P PROVIDE UL LISTED FIRE STOP ASSEMBLY FOR CONDUIT PENETRATIONS THROUGH FIRE RATED CEILINGS, FLOORS, WALLS AND PARTITIONS.
Q MC CABLE MAY BE USED WHERE ALLOWED BY CODE.
R FOR LIGHTING FIXTURE SCHEDULE SEE
S INSTALL BURIED CONDUIT A MINIMUM OF 24 INCHES BELOW GRADE.
T BACK FILL ELECTRICAL CONDUIT TRENCHES WITH ENGINEERED FILL.
U PLACE BACKFILL AND FILL MATERIALS IN LAYERS NOT MORE THAN 8 INCHES IN LOOSE DEPTH FOR MATERIAL COMPACTED BY HEAVY COMPACTION EQUIPMENT AND NOT MORE THAN 4 INCHES IN LOOSE DEPTH FOR MATERIAL COMPACTED BY HAND-OPERATED TAMPERS.
V COMPACT ELECTRICAL CONDUIT TRENCHES TO 95%.
W INSTALL ELECTRICAL WARNING TAPE 12" ABOVE EACH CONDUIT.
X LABEL PANELBOARDS, DISCONNECTS, SWITCHES, RECEPTACLES AND J-BOXES WITH PANEL DESIGNATION AND CIRCUIT NUMBERS.

LIGHTING FIXTURE SCHEDULE

TYPE	MANUFACTURER	CATALOG NUMBER	DESCRIPTION	LAMPS NUMBER	LAMPS TYPE	SYSTEM VOLTAGE	INPUT WATTS
A	METALUX OR EQUAL	4VT2-LD4-4-DR-UNV-L840-CD1-U VT2-CHAIN/SET-U	4' SURFACE MOUNT WITH IMPACT RESISTANT LENS PROVIDE UNISTRUT SUPPORT ATTACHED TO STRUCTURE FOR CONNECTION OF CHAIN SUPPORTS	1	4000 LUMEN 4000K LED	120	38
B	METALUX OR EQUAL	24AC-LD4-44-UNV-L840-CD1-U	2X4 LED LAY-IN 0-10V DIMMING	1	4502 LUMEN 4000 K LED	120	40.6
C	METALUX OR EQUAL	22AC-LD4-23-UNV-L840-CD1-U	2X2 LED LAY-IN LED 0-10V DIMMING WITH PLASTER FRAME FOR HARD CEILING	1	3535 LUMEN 4000K LED	120	30.2
D	MEALUX OR EQUAL	HBLED-LD5-18HE-W-A-UNV-L840-ED-2- HBAYC-CHAIN/SET/2-U	HIGHBAY FIXTURE WITH (2) DRIVERS FOR DUAL LEVEL SWITCHING PROVIDE UNISTRUT SUPPORT ATTACHED TO STRUCTURE FOR CONNECTION OF CHAIN SUPPORTS	2	9000 LUMEN	120	115
F	HALO OR EQUAL	H750ICAT-ML5606840-692W	RECESSED CAN NEW CONSTRUCTION AIR TITE INSULATED CEILING PROTECTED WET LOCATION	1	600 LUMEN 4000K LED	120	8
X	SURE LITES OR EQUAL	LPX-7-SD	LED EXIT SIGN UNIVERSAL MOUNT WITH SELF DIAGNOSTICS AND 90 MINUTE BATTERY BACK UP CONNECT TO UN-SWITCHED LEG OF LIGHTING CIRCUIT	1	5K LED	120	2
EM	SURE LITES OR EQUAL	AEL2-46-SD	LED EMERGENCY LIGHT WITH SELF DIAGNOSTICS AND 90 MINUTE BATTERY BACK UP CONNECT TO UN-SWITCHED LEG OF LIGHTING CIRCUIT	2	5K LED	120	2
EMWP	SURE LITES OR EQUAL	AEL2-46-SD	LED EMERGENCY LIGHT COLD WET LOCATION WITH SELF DIAGNOSTICS AND 90 MINUTE BATTERY BACK UP CONNECT TO UN-SWITCHED LEG OF LIGHTING CIRCUIT	2	5K LED	120	2
W	LUMARK OR EQUAL	XTOR PC 120V OR EQUAL	EXTERIOR WALL MOUNT	1	26 WATT LED	120	26
P	LUMARK OR EQUAL	PFPRV-1-A15-T3-9-HSS-PER-120 OR EQUAL	POLE MOUNT FIXTURE WITH HOUSE SIDE SHIELD PHOTO CELL AND MATCHING 15' POLE	1	57 WATT LED	120	57

BAER ARCHITECTURE NM LLC
Baer Architecture NM
227 East Palace Avenue Suite C
Santa Fe, NM 87501
505.470.6835
allanbaer@comcast.net

McCLAIN + YU ARCHITECTURE & DESIGN
McClain + Yu Architecture & Design
2009 Ridgecrest Dr SE
Albuquerque, NM 87108
505.266.2142
info@mcclain-yu.com
www.mcclain-yu.com

CONSULTANTS

Tarleton Engineering Inc.
MECHANICAL • ELECTRICAL • PLUMBING
910 RIO VISTA CIR. SW
ALBUQUERQUE, NEW MEXICO 87105
Tel: (505) 263-6704
charling@tarenginc.com

GLEN M. TARLETON NEW MEXICO (6601) REGISTERED PROFESSIONAL ENGINEER
11/29/17

PROJECT

SANTA FE COUNTY PUBLIC WORKS DEPARTMENT
PROPERTY CONTROL FACILITY

ADDRESS

424 NM 599
SANTA FE, NM 87507

Date
Project Number
Project File
Drawn By
Checked By

Copyright ©
MCCLAIN + YU ARCHITECTURE AND DESIGN

SHEET TITLE

IECC LIGHTING CALCULATIONS AND LIGHTING FIXTURE SCHEDULE

E-601

SHEET OF

ELECTRICAL LEGEND

SYMBOLS	DESCRIPTION
LP	208/120V 3-PHASE 4-WIRE PANELBOARD.
	DUPLEX RECEPTACLE. WALL MOUNTED. AC=ABOVE COUNTER GFI=GROUND FAULT INTERRUPTER WP=WEATHERPROOF IG=ISOLATED GROUND EM=EMERGENCY
	DOUBLE DUPLEX RECEPTACLE, WALL MOUNTED.
	SINGLE RECEPTACLE. WALL MOUNTED. AC=ABOVE COUNTER GFI=GROUND FAULT INTERRUPTER WP=WEATHERPROOF IG=ISOLATED GROUND EM=EMERGENCY
	DUPLEX RECEPTACLE. FLOOR MOUNTED.
	SPECIAL RECEPTACLE (SEE KEYED NOTE).
$	SINGLE POLE SWITCH. 3 = THREE-WAY SWITCH 4 = FOUR-WAY SWITCH T = MANUAL MOTOR STARTER WITH OVERLOAD d = 0-10 VOLT DIMMER os = OCCUPANCY SENSOR LINE VOLTAGE WALL MOUNT DUAL TECHNOLOGY
OS	OCCUPANCY SENSOR; CEILING MOUNT LOW VOLTAGE DUAL TECHNOLOGY
RCD	ROOM CONTROLLER; DIMMING LOW VOLTAGE SINGLE RELAY MANUAL ON, AUTO OFF
RC	ROOM CONTROLLER; LOW VOLTAGE DUAL RELAY MANUAL ON, AUTO OFF
A	FLUORESCENT FIXTURE. RECESSED CEILING MOUNT. LETTER INDICATES TYPE (SEE FIXTURE SCHEDULE).
A	FLUORESCENT FIXTURE. SURFACE MOUNT. LETTER INDICATES TYPE (SEE FIXTURE SCHEDULE).
A	ROUND FIXTURE. RECESSED OR PENDANT CEILING MOUNT. LETTER INDICATES TYPE (SEE FIXTURE SCHEDULE).
A	EXTERIOR WALL MOUNT LIGHT FIXTURE LETTER INDICATES TYPE (SEE FIXTURE SCHEDULE).
	EMERGENCY LIGHT MOUNT. LETTER INDICATES TYPE (SEE FIXTURE SCHEDULE).
A	POLE MOUNTED FIXTURE. LETTER INDICATES TYPE (SEE FIXTURE SCHEDULE).
	EXIT LIGHT FIXTURE. CEILING MOUNT.
	EXIT LIGHT FIXTURE. WALL MOUNT.

SYMBOLS	DESCRIPTION
	DISCONNECT SWITCH (SEE SCHEDULE FOR DESCRIPTION).
J	JUNCTION BOX.
T	THERMOSTAT.
	MOTOR.
	CONDUIT - BELOW GRADE.
	CONDUIT - ABOVE GROUND.
LPA-2	CONDUIT TO PANELBOARD WITH CIRCUIT NUMBER.
	DATA OUTLET; (1) 4-SQUARE BOX (1) 4-SQUARE TO SINGLE GANG PLASTER RING (1) RJ45 JACK (1) 3/4" C TO ABOVE CEILING (1) CAT 6 CABLE TO SERVER ROOM
	TELEPHONE/DATA OUTLET; (1) 4-SQUARE BOX (1) 4-SQUARE TO SINGLE GANG PLASTER RING (2) RJ45 JACK (2) 3/4" C TO ABOVE CEILING (2) CAT 6 CABLE TO SERVER ROOM
	TELEPHONE OUTLET; (1) 4-SQUARE BOX (1) 4-SQUARE TO SINGLE GANG PLASTER RING (1) RJ45 JACK (1) 3/4" C TO ABOVE CEILING (1) CAT 6 CABLE TO SERVER ROOM
T	TELEPHONE/DATA OUTLET FLOOR MOUNT; (1) FLOOR BOX (1) BRASS COVER RING (2) RJ45 JACK (2) 3/4" C TO ABOVE CEILING (2) CAT 6 CABLE TO SERVER ROOM
WIFI	WIRELESS ACCESS POINT; (1) 4-SQUARE BOX (1) RJ45 JACK (1) CAT 6 CABLE TO SERVER ROOM 1 2
FACP	FIRE ALARM SYSTEM CONTROL PANEL.
RAP	FIRE ALARM SYSTEM REMOTE ANNUNCIATOR PANEL.
F	FIRE ALARM SYSTEM MANUAL PULL STATION.
S	FIRE ALARM SYSTEM SMOKE DETECTOR.
H	FIRE ALARM SYSTEM HEAT DETECTOR,
F	FIRE ALARM SYSTEM HORN/STROBE UNIT.
F	FIRE ALARM SYSTEM STROBE UNIT.
FS	FIRE SUPPRESSION SYSTEM FLOW SWITCH
PS	FIRE SUPPRESSION SYSTEM PRESSURE SWITCH
TS	FIRE SUPPRESSION SYSTEM TAMPER SWITCH
BELL	FIRE SUPPRESSION SYSTEM EXTERIOR BELL
TV	TELEVISION OUTLET BOX.

GENERAL NOTES

A FOR POWER RISER DIAGRAM SEE SHEET E-401.

B FOR CONDUCTOR SIZES SEE SHEETS E-101, E-201, E-301 AND E-401.

C FOR GROUNDING CONDUCTOR SIZES SEE SHEETS E-101, E-201, E-301 AND E-401.

D FOR METHOD OF GROUNDING SEE SHEETS E-401 AND ELECTRICAL SPECIFICATIONS.

E FOR LOAD CALCULATIONS SEE SHEET E-501.

F FOR FAULT CURRENT CALCULATIONS SEE SHEET E-401.

G FOR DISCONNECT SIZES AND LOCATIONS SEE SHEETS E-101, E-201 AND E-401.

H FOR PANEL SCHEDULE SEE SHEET E-501.

I FOR WIRING METHODS SEE ELECTRICAL SPECIFICATIONS.

J FOR IECC LIGHTING BUDGET CALCULATIONS SEE SHEET E-601.

K FOR ELECTRICAL LEGEND SEE SHEET E-701.

L FOR ELECTRICAL SPECIFICATIONS SEE ELECTRICAL SPECIFICATION BOOK.

M CONDUITS ARE 1/2" UNLESS INDICATED OTHERWISE.

N CONDUCTORS ARE #12 THHN/THWN, COPPER UNLESS INDICATED OTHERWISE.

P PROVIDE UL LISTED FIRE STOP ASSEMBLY FOR CONDUIT PENETRATIONS THROUGH FIRE RATED CEILINGS, FLOORS, WALLS AND PARTITIONS.

Q MC CABLE MAY BE USED WHERE ALLOWED BY CODE.

R FOR LIGHTING FIXTURE SCHEDULE SEE

S INSTALL BURIED CONDUIT A MINIMUM OF 24 INCHES BELOW GRADE.

T BACK FILL ELECTRICAL CONDUIT TRENCHES WITH ENGINEERED FILL.

U PLACE BACKFILL AND FILL MATERIALS IN LAYERS NOT MORE THAN 8 INCHES IN LOOSE DEPTH FOR MATERIAL COMPACTED BY HEAVY COMPACTION EQUIPMENT AND NOT MORE THAN 4 INCHES IN LOOSE DEPTH FOR MATERIAL COMPACTED BY HAND-OPERATED TAMPERS.

V COMPACT ELECTRICAL CONDUIT TRENCHES TO 95%.

W INSTALL ELECTRICAL WARNING TAPE 12" ABOVE EACH CONDUIT.

X LABEL PANELBOARDS, DISCONNECTS, SWITCHES, RECEPTACLES AND J-BOXES WITH PANEL DESIGNATION AND CIRCUIT NUMBERS.

REVISIONS

1 1

1 REVIEW COMMENTS 2-20-18 2-20-18

BAER ARCHITECTURE NM LLC

Baer Architecture NM
227 East Palace Avenue Suite C
Santa Fe, NM 87501
505.470.6835
allanbaer@comcast.net

McCLAIN + YU
ARCHITECTURE & DESIGN

McClain + Yu Architecture & Design
2009 Ridgecrest Dr SE
Albuquerque, NM 87108
505.266.2142
info@mcclain-yu.com
www.mcclain-yu.com

CONSULTANTS

Tarleton Engineering Inc.
MECHANICAL • ELECTRICAL • PLUMBING
910 RIO VISTA CIR. SW
ALBUQUERQUE, NEW MEXICO 87105
Tel: (505) 263-6704
charling@tarenginc.com

GLEN M. TARLETON NEW MEXICO 6601 REGISTERED PROFESSIONAL ENGINEER

1 2-20-18

PROJECT

SANTA FE COUNTY
PUBLIC WORKS
DEPARTMENT
PROPERTY CONTROL
FACILITY

ADDRESS

424 NM 599
SANTA FE, NM 87507

Date	
Project Number	
Project File	
Drawn By	
Checked By	

Copyright ©
MCCLAIN + YU ARCHITECTURE AND DESIGN

SHEET TITLE

ELECTRICAL LEGEND

E-701

SHEET OF

PROJECT MANUAL

SANTA FE COUNTY

PROPERTY CONTROL FACILITY

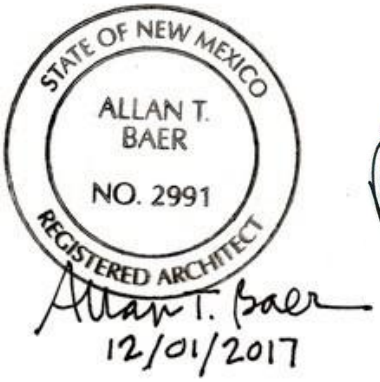

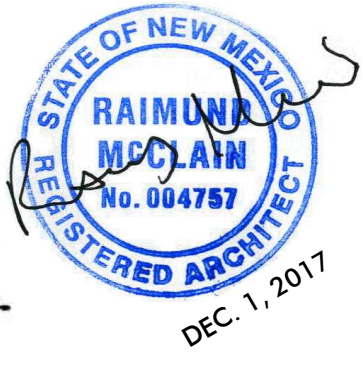

DEC 1, 2017

BAER ARCHITECTURE NM LLC

Baer Architecture NM
227 East Palace Ave. Ste. C
Santa Fe, NM 87501
(505) 470-6835

McCLAIN + YU ARCHITECTURE & DESIGN

McClain + Yu Architecture & Design
2009 Ridgecrest Dr. SE
Albuquerque, NM 87108
www.mcclain-yu.com

TABLE OF CONTENTS

DIVISION 00 – CONTRACT DOCUMENTS

Request for Proposals
Proposal Evaluation and Selection Process
Contract Terms and Conditions (Sample only)
Price Proposal Form
Sub-Contractors Listing Form
New Mexico Wage Rate

DOCUMENT 00 20 00 – INFORMATION AVAILABLE TO ALL BIDDERS SPECIFICATIONS

00 20 00 Information Available to All Bidders (Geotechnical & Survey)

Division 01 - General Requirements

01 10 00 Summary
01 23 00 Alternates
01 26 00 Contract Modification Procedures
01 29 00 Payment Procedures
01 31 00 Project Management and Coordination
01 32 00 Construction Progress Documentation
01 32 33 Photographic Documentation
01 33 00 Submittal Procedures
01 40 00 Quality Requirements
01 50 00 Temporary Facilities and Controls
01 60 00 Product Requirements
01 63 00 Substitutions and Product Options
01 73 00 Execution
01 73 29 Cutting and Patching
01 74 19 Construction Waste Management and Disposal
01 77 00 Closeout Procedures
01 78 23 Operation and Maintenance Data
01 78 39 Project Record Documents
01 79 00 Demonstration and Training
01 81 00 General Commissioning Requirements

Division 02 - Existing Conditions

02 41 19 Selective Demolition

Division 03 – Concrete

03 10 00 Concrete Formwork
03 20 00 Concrete Reinforcement
03 30 00 Cast In Place Concrete

Division 04 – Masonry

Not Used

Division 05 – Metals

05 10 00 Structural Steel
05 30 00 Metal Decking
05 40 00 Cold Formed Metal Framing
05 50 00 Metal Fabrications
05 52 13 Pipe and Tube Railings

Division 06 - Wood, Plastics, and Composites

06 10 00 Rough Carpentry
06 20 00 Finish Carpentry
06 40 23 Architectural Casework

Division 07 - Thermal and Moisture Protection

07 21 00 Thermal Insulation
07 42 13 Metal Wall Panels
07 42 16 Metal Soffit Panels
07 54 23 Thermoplastic Membrane Roofing
07 62 00 Sheet Metal Flashing and Trim
07 72 00 Roof Accessories
07 92 00 Joint Sealants

Division 08 - Openings

08 11 13 Hollow Metal Doors and Frames
08 14 16 Flush Wood Doors
08 31 13 Access Doors
08 33 23 Overhead Coiling Doors
08 41 13 Aluminum Framed Entrances and Storefront
08 62 00 Unit Skylights
08 71 00 Finish Hardware
08 80 00 Glazing

Division 09 – Finishes

09 22 16 Non-Structural Metal Framing
09 29 00 Gypsum Board
09 30 00 Tiling
09 51 13 Acoustical Ceiling Panels
09 65 13 Resilient Base and Accessories
09 65 19 Resilient Tile Flooring
09 91 00 Painting

Division 10 – Specialties

10 11 00 Visual Display Units
10 14 00 Signage
10 14 26 Post and Panel Signs
10 21 13 Toilet Compartments

10 28 00 Toilet Accessories
10 44 00 Fire Protection Specialties
10 51 13 Metal Lockers (and Locker Benches)

Division 11 – Equipment

Not Used

Division 12 – Furnishings

12 21 13 Horizontal Louver Blinds
12 48 13 Entrance Floor Mats and Frames

Division 13 – Special Construction

13 34 19 Metal Building Systems

Division 14 – Conveying Equipment

Not Used

Division 21 – Fire Suppression

Not used

Division 22- Plumbing

22 05 23 General-Duty Valves for Plumbing Piping
22 07 19 Plumbing Piping Insulation
22 11 16 Domestic Water Piping
22 13 16 Sanitary Waste and Vent Piping
22 40 00 Plumbing Fixtures

Division 23 – Heating, Ventilating, And Air Conditioning (HVAC)

23 00 00 Basic Mechanical Materials and Methods
23 05 53 Identification for HVAC Piping and Equipment
23 05 93 Testing, Adjusting, and Balancing for HVAC
23 0713 Duct Insulation
23 11 23 Facility Natural-Gas Piping
23 31 13 Metal Ducts
23 33 00 Air Duct Accessories
23 34 16 Centrifugal HVAC Fans
23 37 13 Diffusers, Registers, and Grilles
23 74 13 Packaged, Outdoor, Central-Station Air-Handling units

Division 25 Integrated Automation

Not Used

Division 26 – Electrical

26 16 05 Electrical

Division 27 – Communications

Not Used

Division 28 – Electronic Safety and Security

Not Used

Division 31 – Earthwork

31 00 00 Earthwork
31 10 00 Site Preparation

Division 32 – Exterior Improvements

32 12 16 Asphalt Paving
32 13 13 Concrete Paving
32 17 23 Pavement Markings

Division 33 – Utilities

33 33 00 Sanitary Sewer
33 41 00 Storm Drain Piping

DOCUMENT 00 20 00 - Information Available to All Bidders

PART 1 - GENERAL

1.1 DOCUMENT INCLUDES

A. For the convenience of the Bidders.

A Site Survey is provided with the Drawings as Sheet C-100. This Survey was prepared by Land Surveying Company, LLC of Santa Fe, NM, and consists of a single sheet dated March 7, 2017.

B. Soil Boring Data and a Geotechnical Engineering Services Report dated March 21, 2017, prepared by Geo-Test, Inc. consisting of 20 pages. Bidders are urged to examine the geotechnical data and make their own investigations of the site before bidding.

1.2 OWNER'S DISCLAIMER

A. The data provided herein is intended only for the general information and convenience of the Bidders.

B. The Owner and Architect disclaim all responsibility for the accuracy, true location, and extent of the geotechnical data, survey information, and existing building drawings that has been prepared by others. They further disclaim responsibility for interpretation of such data and information.

C. All determinations or judgments made by or in behalf of the successful Bidder shall be solely the responsibility of the successful Bidder.

D. Information Available to All Bidders is not part of the Contract Documents.

PART 2 - PRODUCTS - (Not Applicable).

PART 3 - EXECUTION - (Not Applicable).

END OF SECTION 00 20 00

GEO-TEST

GEOTECHNICAL ENGINEERING SERVICES JOB NO. 1-70209 SANTA FE COUNTY PUBLIC WORKS PROPERTYCONTROL FACILITY ADDITIONS SANTA FE, NEW MEXICO

GEO-TEST, INC.
3204 RICHARDS LANE
SANTA FE,
NEW MEXICO
87507
(505) 471-1101
FAX (505) 471-2245

8528 CALLE ALAMEDA NE
ALBUQUERQUE,
NEW MEXICO
87113
(505) 857-0933
FAX (505) 857-0803

2805-A LAS VEGAS CT.
LAS CRUCES,
NEW MEXICO
88007
(575) 526-6260
FAX (575) 523-1660

PREPARED FOR:

BAER ARCHITECTURE, NM

GEO-TEST

March 21, 2017
Job No.1-70209

Baer Architecture, NM
227 East Palace Avenue, Suite C
Santa Fe, New Mexico 87501

ATTN: Mr. Allen T. Baer, AIA, NCARB

RE: Geotechnical Engineering Services Report
Santa Fe County
Public Works Property Control
Facility Additions
Santa Fe, New Mexico

Dear Mr. Baer:

Submitted herein is the Geotechnical Engineering Services Report for the above referenced project. The report contains the results of our field investigation, laboratory testing, and recommendations for foundation, slab support, as well as criteria for site grading.

It has been a pleasure to serve you on this project. If you should have any questions, please contact this office.

Respectfully submitted:

GEO-TEST, INC.

Timothy Matson, Staff Engineer

Reviewed by:

Robert D Booth, P.E.

ROBERT D. BOOTH
NEW MEXICO
5711
LICENSED PROFESSIONAL ENGINEER

cc: Addressee

GEO-TEST, INC.
3204 RICHARDS LANE
SANTA FE,
NEW MEXICO
87507
(505) 471-1101
FAX (505) 471-2245

8528 CALLE ALAMEDA NE
ALBUQUERQUE,
NEW MEXICO
87113
(505) 857-0933
FAX (505) 857-0803

2805-A LAS VEGAS CT.
LAS CRUCES,
NEW MEXICO
88007
(575) 526-6260
FAX (575) 523-1660

GEO-TEST

TABLE OF CONTENTS

INTRODUCTION 1

PROPOSED CONSTRUCTION 1

FIELD EXPLORATION 1

LABORATORY TESTING 2

SITE CONDITIONS 2

SUBSURFACE SOIL CONDITIONS 2

CONCLUSIONS AND RECOMMENDATIONS 2

FOUNDATIONS 3

UPLIFT AND LATERAL FORCES 4

SLABS ON GRADE 4

PAVEMENTS 5

SITE GRADING 6

MOISTURE PROTECTION 7

FOUNDATION REVIEW AND INSPECTION 8

CLOSURE 8

BORING LOCATION MAP 9

BORING LOGS 10

SUMMARY OF LABORATORY RESULTS 14

CONSOLIDATION TEST RESULTS 15

GRAIN SIZE DISTRIBUTION 16

GEO-TEST, INC.
3204 RICHARDS LANE
SANTA FE,
NEW MEXICO
87507
(505) 471-1101
FAX (505) 471-2245

8528 CALLE ALAMEDA NE
ALBUQUERQUE,
NEW MEXICO
87113
(505) 857-0933
FAX (505) 857-0803

2805-A LAS VEGAS CT.
LAS CRUCES,
NEW MEXICO
88007
(575) 526-6260
FAX (575) 523-1660

INTRODUCTION

This report presents the results of the geotechnical engineering services investigation performed for the proposed additions to the Santa Fe County Public Works, Property Control Facility located at 424 NM 599 Frontage Road in Santa Fe, New Mexico.

The objectives of this investigation were to:

1) Evaluate the nature and engineering properties of the subsurface soils underlying the site.

2) Provide recommendations for foundation design, slab support, as well as criteria for site grading.

.

The investigation includes subsurface exploration, selected soil sampling, laboratory testing of the samples, performing an engineering analysis and preparation of this report.

PROPOSED CONSTRUCTION

It is understood that the project consists of the construction of a 5,400-square foot single story structure and a 6,000-square foot covered vehicle shelter as well as associated uncovered parking and drive lanes. No basements are planned and concrete slabs will be cast on grade. Structural loads are unknown at this time but are anticipated to be relatively light to moderate, not exceeding about 50 kips on columns and 2 kips per lineal foot on walls. It is anticipated that uplift forces will control foundation design for the covered vehicle shelter.

Should foundation loads or other project details vary significantly from those outlined above, this firm should be notified for review and possible revision of the recommendations contained herein.

FIELD EXPLORATION

Four exploratory borings were drilled at the site to depths ranging from approximately 15½ to 20½ feet below existing site grade. The locations of the borings are shown on the attached Boring Location Map, Figure 1. Drilling was accomplished with a truck mounted drill rig using 5.5-inch diameter continuous flight hollow stem auger. Subsurface materials were sampled at five foot intervals or less utilizing an open tube split barrel sampler and a brass ring-lined sampler driven by a standard penetration test hammer.

GEO-TEST, INC.
3204 RICHARDS LANE
SANTA FE,
NEW MEXICO
87507
(505) 471-1101
FAX (505) 471-2245

8528 CALLE ALAMEDA NE
ALBUQUERQUE,
NEW MEXICO
87113
(505) 857-0933
FAX (505) 857-0803

2805-A LAS VEGAS CT.
LAS CRUCES,
NEW MEXICO
88007
(575) 526-6260
FAX (575) 523-1660

Copyright© 2017, GEO-TEST, INC.

LABORATORY TESTING

Selected soil samples were tested in the laboratory to determine certain engineering properties of the soils. Moisture contents were determined to evaluate the various soil deposits with depth. The results of these tests are shown on the boring logs.

Sieve analysis and Atterberg limits tests were performed to aid in soil classification. In addition, a consolidation test was performed on selected sample to evaluate the volume change potential of the soils upon moisture increases. Results of these tests are presented in the Summary of Laboratory Results and on the individual test reports presented in a following section of this report.

SITE CONDITIONS

A brief site reconnaissance was performed during our site exploration. The site is located at 424 NM 599 Frontage Road in Santa Fe, New Mexico. The relatively flat site is located north of the existing facility, east of the existing vehicle shelters. The site is currently used to park construction equipment. A septic tank was observed east of the proposed addition, the existing leech field is located north of the proposed building addition and east of the proposed covered vehicle storage. Several underground utilities lie within the footprint of the proposed addition.

SUBSURFACE SOIL CONDITIONS

As indicated by the exploratory borings, the soils underlying the site consist predominantly of silty sands and clayey sands with various amounts of gravel interbedded with lesser amounts of clays with various amounts of fine sand. The silty sands were generally non-plastic while the clayey soils ranged from low to medium in plasticity. As indicated by the standard penetration tests, the granular soils ranged from medium dense to very dense while the clay soils were generally moderately firm to firm.

No free groundwater was encountered in the borings and soil moisture contents were generally low to moderate in the granular soils and moderate to high in the clay soils, being well above the plastic limit.

CONCLUSIONS AND RECOMMENDATIONS

The native soils encountered in the borings are medium dense to dense and moderately firm to firm at shallow depths, and thus, are considered suitable

GEO-TEST, INC.
3204 RICHARDS LANE
SANTA FE,
NEW MEXICO
87507
(505) 471-1101
FAX (505) 471-2245

8528 CALLE ALAMEDA NE
ALBUQUERQUE,
NEW MEXICO
87113
(505) 857-0933
FAX (505) 857-0803

2805-A LAS VEGAS CT.
LAS CRUCES,
NEW MEXICO
88007
(575) 526-6260
FAX (575) 523-1660

Copyright© 2017, GEO-TEST, INC.

to provide reliable support of the proposed structures. Accordingly, provided the site is prepared as recommended in the Site Grading section of this report, it is recommended that the proposed structure be supported on shallow spread-type footings and slab on-grade bearing directly on densified native soils or on properly compacted structural fill. Detailed recommendations concerning the required site preparation and foundation design are presented in the following sections of this report.

Post-construction moisture increases in the supporting soils could cause some differential foundation movements. Therefore, moisture protection is an important design consideration and should be reflected in overall site grading and drainage details as recommended in the Moisture Protection section of this report.

FOUNDATIONS

Shallow spread-type footings and slabs on-grade bearing directly on densified native soils, or on properly compacted structural fill, are recommended for the support of the structures. An allowable soil bearing pressure of 2,000 pounds per square foot is recommended for footing design. The bearing pressure applies to full dead load plus realistic live loads, and can be safely increased by one-third for totals loads including wind and seismic forces.

Exterior footings should be established a minimum of 2.0 feet below lowest adjacent grade while interior footings should extend at least 12 inches below finished floor elevation. The minimum recommended width of continuous footings is 16 inches while the minimum recommended width of isolated spot footings is 2 feet.

All bearing surfaces should be cleaned of all loose, disturbed material prior to placement of structural fill or concrete. All foundation systems should be adequately reinforced to aid in redistributing loads and to minimize the effects of differential settlement.

Maximum settlements of foundations designed and constructed as recommended herein are estimated not to exceed ¾ inch for the in-situ soil moisture contents or compaction moistures introduced during construction. Differential settlements are not expected to exceed ½ inch. Significant moisture post-construction increases could create additional settlements. Accordingly, the site drainage and moisture protection provisions recommended in a following section of this report are considered critical for the satisfactory performance of the structure.

GEO-TEST, INC.
3204 RICHARDS LANE
SANTA FE,
NEW MEXICO
87507
(505) 471-1101
FAX (505) 471-2245

8528 CALLE ALAMEDA NE
ALBUQUERQUE,
NEW MEXICO
87113
(505) 857-0933
FAX (505) 857-0803

2805-A LAS VEGAS CT.
LAS CRUCES,
NEW MEXICO
88007
(575) 526-6260
FAX (575) 523-1660

Copyright© 2017, GEO-TEST, INC.

UPLIFT AND LATERAL FORCES

It is anticipated that uplift forces may control foundation design of the covered vehicle storage structures. The shallow spread-type footings recommended above will also resist upward forces. The ultimate uplift resistance of spread-type footings should be considered equal to the weight of the concrete in the footing plus the weight of the soil contained in an inverted prism defined by lines extending upward and outward at an angle of 30 degrees from the top edges of the footings to the ground surface. A unit weight 120 pounds per cubic foot should be used for the weight of the soil when placed as structural fill as recommended in a following section of this report. A factor of safety of 2.0 should be used to calculate the allowable uplift capacity.

Resistance to lateral forces will be provided by soil friction between the base of the footings and the soil and by passive earth resistance against the side of the footings. A coefficient of friction of 0.40 should be used for computing the lateral resistance between bases of footings and the soil. With backfill as recommended in the site grading section of this report, a passive soil resistance equivalent to a fluid weighing 325 pounds per cubic foot should be used for analysis.

SLABS ON GRADE

Adequate support for lightly loaded slab-on-grade floors will be provided by the densified native soils or structural fill when placed and compacted as recommended in a following section of this report. Thus, the use of granular base for structural support of lightly loaded slabs is not considered necessary. However, should it be desired as a working surface, a course of granular base can be placed beneath concrete floor slabs.

Heavily loaded floor slabs bearing directly on densified native soils or on structural fill can be designed using a modulus of subgrade reaction (k) value of 200 pci. This value can be increased to 300 pci provided a 6-inch thickness of granular base is placed and compacted beneath the slabs.

Where granular base is used beneath the slabs, it should have a plasticity index of no greater than 3 and meet the following grading requirements:

GEO-TEST, INC.
3204 RICHARDS LANE
SANTA FE,
NEW MEXICO
87507
(505) 471-1101
FAX (505) 471-2245

8528 CALLE ALAMEDA NE
ALBUQUERQUE,
NEW MEXICO
87113
(505) 857-0933
FAX (505) 857-0803

2805-A LAS VEGAS CT.
LAS CRUCES,
NEW MEXICO
88007
(575) 526-6260
FAX (575) 523-1660

Copyright© 2017, GEO-TEST, INC.

Sieve Size (Square Openings)	Percent Passing by Dry Weight
1 Inch	100
¾ Inch	85-100
No. 4	45-95
No. 200	0-8

The granular base should be compacted to a minimum of 95 percent of maximum dry density as determined in accordance with ASTM D1557.

The granular base will act as a capillary barrier, but will not totally eliminate the rise of moisture to the slabs. If floor coverings are proposed which are highly sensitive to moisture, it is recommended the slab be placed in accordance with the procedures recommended by the American Concrete Institute (ACI 302.1R-04).

PAVEMENTS

Based on the results of laboratory testing and in accordance with publications prepared by the Asphalt Institute, a minimum asphaltic pavement section of 3.0 inches of hot mix asphalt (HMA) over 6 inches of aggregate base course over 8 inches of compacted subgrade is recommended for areas subject to light automobile traffic and parking areas. Where traffic lanes are subject to heavy automobile, truck, and bus traffic, the above section should be thickened by an additional one inch of asphalt pavement.

Areas subjected to truck traffic including delivery trucks (loading docks) and trash collection trucks (dumpster access) should be paved with a minimum of 6 inches of Portland cement concrete placed over 4 inches of compacted base course over 8 inches of compacted subgrade.

Increases in the subgrade moisture content can create weakening of the soils, thereby, shortening pavement life and causing localized failure. Therefore, all paved areas should be designed to drain completely and allow no ponding. Pavement materials should conform to materials as specified in the New Mexico Department of Transportation Standard Specifications for Highway and Bridge Construction. All native subgrade soils should be compacted to a minimum of 95 percent of the maximum dry density determined by ASTM D-1557 density. The HMA should be SPIII or SPIV, compacted to a target density of 94.5 percent, with a minimum compaction of 92 and a maximum compaction of 97 percent of the theoretical maximum density. The Performance Grade (PG) asphalt binder used should be based on the NMDOT's Pavement Type Selection and Design Guideline.

GEO-TEST, INC.
3204 RICHARDS LANE
SANTA FE,
NEW MEXICO
87507
(505) 471-1101
FAX (505) 471-2245

8528 CALLE ALAMEDA NE
ALBUQUERQUE,
NEW MEXICO
87113
(505) 857-0933
FAX (505) 857-0803

2805-A LAS VEGAS CT.
LAS CRUCES,
NEW MEXICO
88007
(575) 526-6260
FAX (575) 523-1660

Copyright© 2017, GEO-TEST, INC.

SITE GRADING

The following guidelines should be included in the project construction specifications to provide a basis for quality control during site grading. It is recommended that all structural fill and backfill be placed and compacted under engineering observation and in accordance with the following:

1) After site clearing, the exposed native soils throughout the entire building area should be densified prior to construction or `placement of structural fill. In addition, the soils beneath all footings should be densified after excavation and prior to placement of concrete.

2) Densification shall consist of scarifying the exposed native soils to a depth of 8 inches, moisture conditioning to the optimum moisture content or above, and compacting the surface to a minimum of 95 percent of maximum dry density as determined in accordance with ASTM D-1557.

3) The results of this investigation indicate that most of the existing native site soils will meet the criteria for structural fill; however, some on-site blending or blending with an import material may be required to meet the specification for structural fill. Any imported material should also meet the specification for structural fill. All structural fill or backfill material should be free of vegetation and debris and contain no rocks larger than 3 inches. Gradation of the structural fill or backfill material, as determined in accordance with ASTM D-422, should be as follows:

Size	Percent Passing
3 inch	100
No. 4	60 - 100
No. 200	20 - 45

4) The plasticity index should be no greater than 15 when tested in accordance with ASTM D-4318.

5) Fill or backfill, shall be placed in 8 inch loose lifts and compacted with approved compaction equipment. Loose lifts should be reduced to 4 inches if hand held compaction equipment is used. Each lift should be firm and non-yielding. All compaction of fill or backfill shall be accomplished to a minimum of 95 percent of the maximum dry density as determined in accordance with ASTM D-1557. The moisture

GEO-TEST, INC.
3204 RICHARDS LANE
SANTA FE,
NEW MEXICO
87507
(505) 471-1101
FAX (505) 471-2245

8528 CALLE ALAMEDA NE
ALBUQUERQUE,
NEW MEXICO
87113
(505) 857-0933
FAX (505) 857-0803

2805-A LAS VEGAS CT.
LAS CRUCES,
NEW MEXICO
88007
(575) 526-6260
FAX (575) 523-1660

Copyright© 2017, GEO-TEST, INC.

content of the structural fill during compaction should be within 2 percent of the optimum moisture content.

6) Tests for degree of compaction should be determined by the ASTM D-1556 method or ASTM D-6938. Observation and field tests should be carried on during fill and backfill placement by the geotechnical engineer to assist the contractor in obtaining the required degree of compaction. If less than 95 percent is indicated, additional compaction effort should be made with adjustment of the moisture content as necessary until 95 percent compaction is obtained.

MOISTURE PROTECTION

Precautions should be taken during and after construction to minimize moisture increase of foundation soils. Positive drainage should be established away from the exterior walls of the structures and for a distance of at least 10 feet beyond their perimeter. A typical adequate slope is 6 inches in the first 5 feet with positive drainage being provided from those points to streets or natural water courses. If necessary to provide positive drainage, the building areas should be raised above adjacent grade with structural fill. Backfill should be well compacted and should meet the specifications outlined in the Site Grading section of this report.

Irrigation within 10 feet of foundations should either be avoided or carefully controlled. All utility trenches leading into the structures should be backfilled with compacted fill meeting the specifications for structural fill presented in the Site Grading section of this report. Special care should be taken during installation of the subfloor sewer and water lines to reduce the possibility of future subsurface saturation.

Proper landscaping and drainage maintenance is required to preclude accumulation of excessive moisture in the soils below the structures. Accumulations of excessive moisture could be harmful to some types of interior flooring, to HVAC ductwork beneath the slabs, and can weaken or cause other changes in the soils supporting the foundations. This can cause differential movement of the foundations and can result in cosmetic or structural damage to the structures.

If any water line leaks or if irrigation system leaks are detected, they should be promptly repaired. And, if any depressions develop from the settlement of soils in utility trenches or other areas, they should be backfilled to maintain the grade so that surface water drains rapidly away from the structures.

GEO-TEST, INC.
3204 RICHARDS LANE
SANTA FE,
NEW MEXICO
87507
(505) 471-1101
FAX (505) 471-2245

8528 CALLE ALAMEDA NE
ALBUQUERQUE,
NEW MEXICO
87113
(505) 857-0933
FAX (505) 857-0803

2805-A LAS VEGAS CT.
LAS CRUCES,
NEW MEXICO
88007
(575) 526-6260
FAX (575) 523-1660

Copyright© 2017, GEO-TEST, INC.

FOUNDATION REVIEW AND INSPECTION

This report has been prepared to aid in the evaluation of this site and to assist in the design of this project. It is recommended that the geotechnical engineer be provided the opportunity to review the design drawings and specifications in order to determine whether the recommendations in this report are applicable to the design. Review of the design drawings and specifications should be noted in writing by the geotechnical engineer.

CLOSURE

Our conclusions, recommendations and opinions presented herein are:

1) Based upon our evaluation and interpretation of the findings of the field and laboratory program.

2) Based upon an interpolation of soil conditions between and beyond the explorations.

3) Subject to confirmation of the conditions encountered during construction.

4) Based upon the assumption that sufficient observation will be provided during construction.

5) Prepared in accordance with generally accepted professional geotechnical engineering principles and practice.

This report has been prepared for the sole use of Baer Architecture, NM, specifically, to aid in the design of the proposed additions to the County Public Works Property Control Facility located at 424 NM 599 Frontage Road in Santa Fe, New Mexico, and not for use by any third parties.

We make no other warranty, either express or implied. Any person using this report for bidding or construction purposes should perform such independent investigation as he deems necessary to satisfy himself as to the surface and subsurface conditions to be encountered and the procedures to be used in the performance of work on this project. If conditions encountered during construction appear to be different than indicated by this report, this office should be notified.

All soil samples will be discarded 60 days after the date of this report unless we receive a specific request to retain the samples for a longer period.

GEO-TEST, INC.
3204 RICHARDS LANE
SANTA FE,
NEW MEXICO
87507
(505) 471-1101
FAX (505) 471-2245

8528 CALLE ALAMEDA NE
ALBUQUERQUE,
NEW MEXICO
87113
(505) 857-0933
FAX (505) 857-0803

2805-A LAS VEGAS CT.
LAS CRUCES,
NEW MEXICO
88007
(575) 526-6260
FAX (575) 523-1660

Copyright© 2017, GEO-TEST, INC.

BORING LOCATION MAP

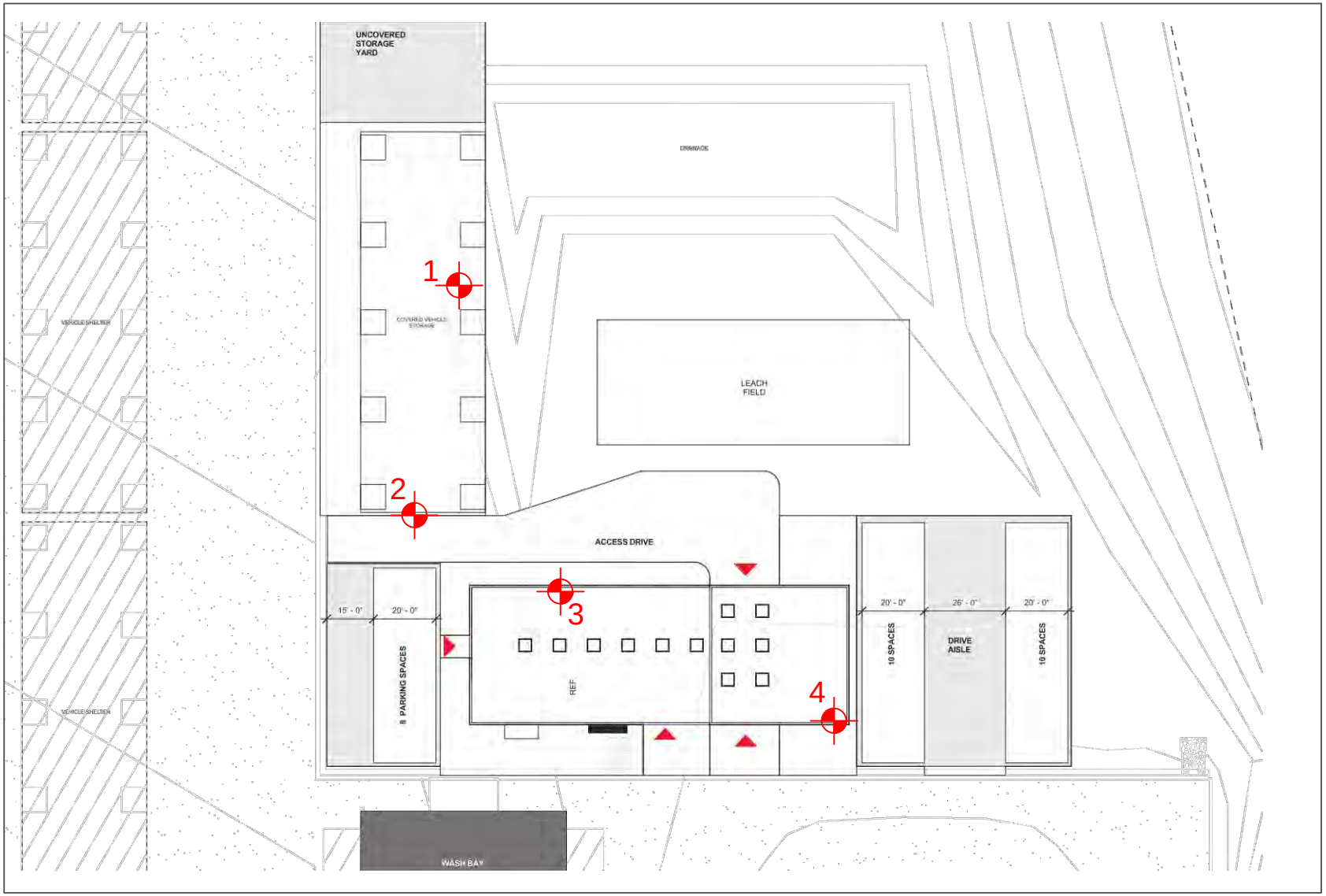

Public Works Property Control Facility Additions
Santa Fe, New Mexico
Job No. 1-70209

Figure 1

N
W E
S

GEO-TEST
GEOTECHNICAL ENGINEERING
AND MATERIAL TESTING

GEO-TEST

Project: Public Works Property Control Facility Additions
Date: 02/28/2017 Project No: 1-70209
Elevation: Type: 5.5" OD HSA

LOG OF TEST BORINGS

GROUNDWATER DEPTH

NO: 01

During Drilling: NONE After 24 Hours:

DEPTH (Ft)	LOG	SAMPLE INTERVAL	TYPE	N. BLOWS/FT	MOISTURE %	DRY DENSITY (pcf)	USC	DESCRIPTION
			SS	10-20-29 49	9		SM	SILTY SAND with GRAVEL, fine to medium grained, non-plastic to low plasticity, dense to very dense, slightly moist, brown
5			SS	21-30-37 67	9			
							CL	CLAY with SAND, medium plasticity, moderately firm to firm, very moist, brown
10			SS	13-17-26 43	8		SM	SILTY SAND, fine to medium grained, non-plastic, dense to very dense, slightly moist, brown
15			SS	19-26-30 56	8			
								STOPPED AUGER AT 14' STOPPED SAMPLER AT 15.5'
20								
25								

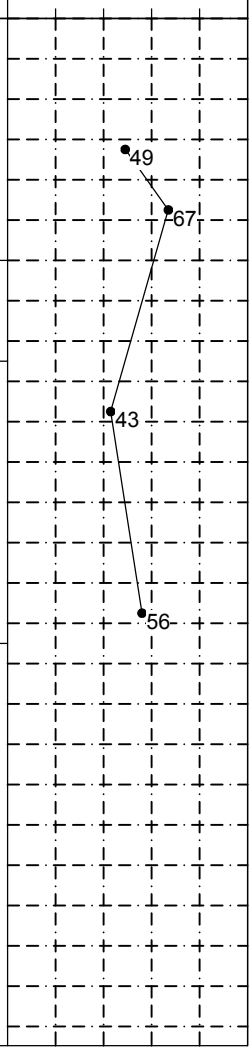

LEGEND

SS - Split Spoon
AC - Auger Cuttings
UD/SL - Undisturbed Sleeve
AMSL - Above Mean Sea Level
CS - Continuous Sampler
UD - Undisturbed
ST - Shelby Tube

Stratification lines represent approximate boundaries between soil types. Transitions may be gradual. Water level readings have been made at times and under conditions stated. Fluctuations of groundwater may occur due to factors other than those present at the time measurments were made.

LOG OF TEST BORING 1-70209 SANTA FE COUNTY PUBLIC WORKS PROPERTY CONTROL FACILITY.GPJ GEO TEST.GDT 3/17/17

GEO-TEST

Project: Public Works Property Control Facility Additions
Date: 02/28/2017 Project No: 1-70209
Elevation: Type: 5.5" OD HSA

LOG OF TEST BORINGS

GROUNDWATER DEPTH

NO: 02

During Drilling: NONE After 24 Hours:

DEPTH (Ft)	LOG	SAMPLE INTERVAL	TYPE	N. BLOWS/FT	MOISTURE %	DRY DENSITY (pcf)	USC	DESCRIPTION
					11		SC	CLAYEY SAND, fine to medium grained, low plasticity, medium dense, moist, brown
			SS	7-5-7 12			SM	SILTY SAND, fine to medium grained, non-plastic, medium dense, slightly moist, brown
5			SS	10-8-7 15	9 34		CL	CLAY with SAND, medium plasticity, moderately frim to firm, very moist, brown
10			SS	10-16-20 36	8		SM	SILTY SAND, fine to medium grained, non-plastic, dense to very dense, slightly moist, brown
15			SS	16-25-31 56	8			STOPPED AUGER AT 14' STOPPED SAMPLER AT 15.5'
20								
25								

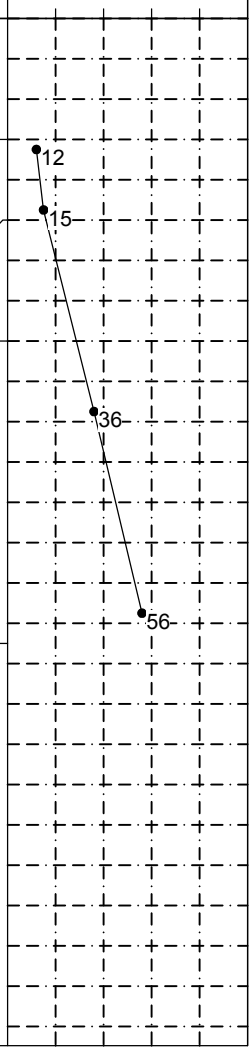

LEGEND

SS - Split Spoon
AC - Auger Cuttings
UD/SL - Undisturbed Sleeve
AMSL - Above Mean Sea Level
CS - Continuous Sampler
UD - Undisturbed
ST - Shelby Tube

Stratification lines represent approximate boundaries between soil types. Transitions may be gradual. Water level readings have been made at times and under conditions stated. Fluctuations of groundwater may occur due to factors other than those present at the time measurments were made.

LOG OF TEST BORING 1-70209 SANTA FE COUNTY PUBLIC WORKS PROPERTY CONTROL FACILITY.GPJ GEO TEST.GDT 3/17/17

GEO-TEST

Project: Public Works Property Control Facility Additions
Date: 02/28/2017 Project No: 1-70209
Elevation: Type: 5.5" OD HSA

LOG OF TEST BORINGS

GROUNDWATER DEPTH

NO: 03

During Drilling: NONE After 24 Hours:

DEPTH (Ft)	LOG	SAMPLE INTERVAL	TYPE	N. BLOWS/FT	MOISTURE %	DRY DENSITY (pcf)	USC	DESCRIPTION
					11		SC	CLAYEY SAND, fine to medium grained, low plasticity, medium dense, slightly moist to moist, brown
			SS	9-11-11 22				
5			SS	10-10-17 27	17			
10			SS	20-22-25 47	7		SM	SILTY SAND with GRAVEL, fine to medium grained, non-plastic, dense to very dense, slightly moist, brown
15			SS	25-30-33 63	7			STOPPED AUGER AT 14' STOPPED SAMPLER AT 15.5'
20								
25								

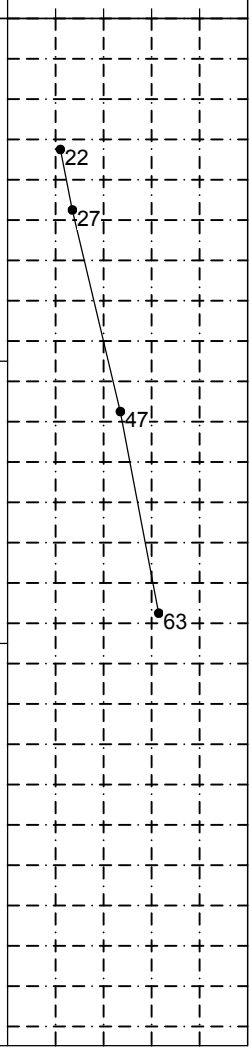

LEGEND

SS - Split Spoon
AC - Auger Cuttings
UD/SL - Undisturbed Sleeve
AMSL - Above Mean Sea Level
CS - Continuous Sampler
UD - Undisturbed
ST - Shelby Tube

Stratification lines represent approximate boundaries between soil types. Transitions may be gradual. Water level readings have been made at times and under conditions stated. Fluctuations of groundwater may occur due to factors other than those present at the time measurments were made.

LOG OF TEST BORING 1-70209 SANTA FE COUNTY PUBLIC WORKS PROPERTY CONTROL FACILITY.GPJ GEO TEST.GDT 3/17/17

GEO-TEST

Project: Public Works Property Control Facility Additions
Date: 02/28/2017 Project No: 1-70209
Elevation: Type: 5.5" OD HSA

LOG OF TEST BORINGS

GROUNDWATER DEPTH

NO: 04

During Drilling: NONE After 24 Hours:

DEPTH (Ft)	LOG	SAMPLE INTERVAL	TYPE	N. BLOWS/FT	MOISTURE %	DRY DENSITY (pcf)	USC	DESCRIPTION
			UD	10-16 26	13		SC	CLAYEY SAND, low plasticity, medium dense, moist, brown
5			SS	4-4-8 12	26		CL	CLAY, medium plasticity, moderately firm, very moist, light brown
10			SS	16-17-23 40	30			
15			SS	16-17-13 30	8		SM	SILTY SAND, fien to medium grained, some gravel, non-plastic, dense, slightly moinst, brown to orange/brown
20			SS	15-17-21 38	6			STOPPED AUGER AT 19' STOPPED SAMPLER AT 20.5'
25								

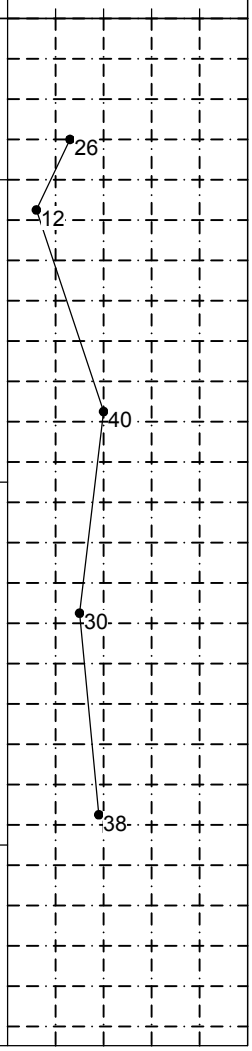

LEGEND

SS - Split Spoon
AC - Auger Cuttings
UD/SL - Undisturbed Sleeve
AMSL - Above Mean Sea Level
CS - Continuous Sampler
UD - Undisturbed
ST - Shelby Tube

Stratification lines represent approximate boundaries between soil types. Transitions may be gradual. Water level readings have been made at times and under conditions stated. Fluctuations of groundwater may occur due to factors other than those present at the time measurments were made.

LOG OF TEST BORING 1-70209 SANTA FE COUNTY PUBLIC WORKS PROPERTY CONTROL FACILITY.GPJ GEO TEST.GDT 3/17/17

SUMMARY OF LABORATORY RESULTS

						SIEVE ANALYSIS PERCENT PASSING											
TEST HOLE	DEPTH (FEET)	UNIFIED CLASS	(%) MOIST	LL	PI	NO 200	NO 100	NO 40	NO 10	NO 4	3/8"	1/2"	3/4"	1"	1 1/2"	2"	4"
01	3.0	SM	8.9	NP	NP	17	22	37	67	85	95	98	100				
01	5.0		8.6														
01	10.0		8.4														
01	15.0		8.0														
02	2.5		11.3														
02	4.5		8.9														
02	5.5	CL	33.7	46	23	82	89	94	98	99	100						
02	10.0		8.1														
02	15.0		8.2														
03	1.0	SC	11.3	30	10	37	46	61	81	90	93	95	96	100			
03	5.0		17.1														
03	10.0	SM	7.2	NP	NP	13	18	36	54	68	87	93	100				
03	15.0		7.5														
04	3.0	SC	13.4	32	12	32	44	62	90	99	100						
04	5.0	CL	26.4	42	20	73	86	96	99	100							
04	10.0		29.9														
04	15.0		8.2														
04	20.0		6.1														

GEO-TEST

LL = LIQUID LIMIT
PI = PLASTICITY INDEX
NP = NON PLASTIC or NO VALUE

Project: Public Works Property Control Facility Additions

Location: Santa Fe, NM

Number: 1-70209

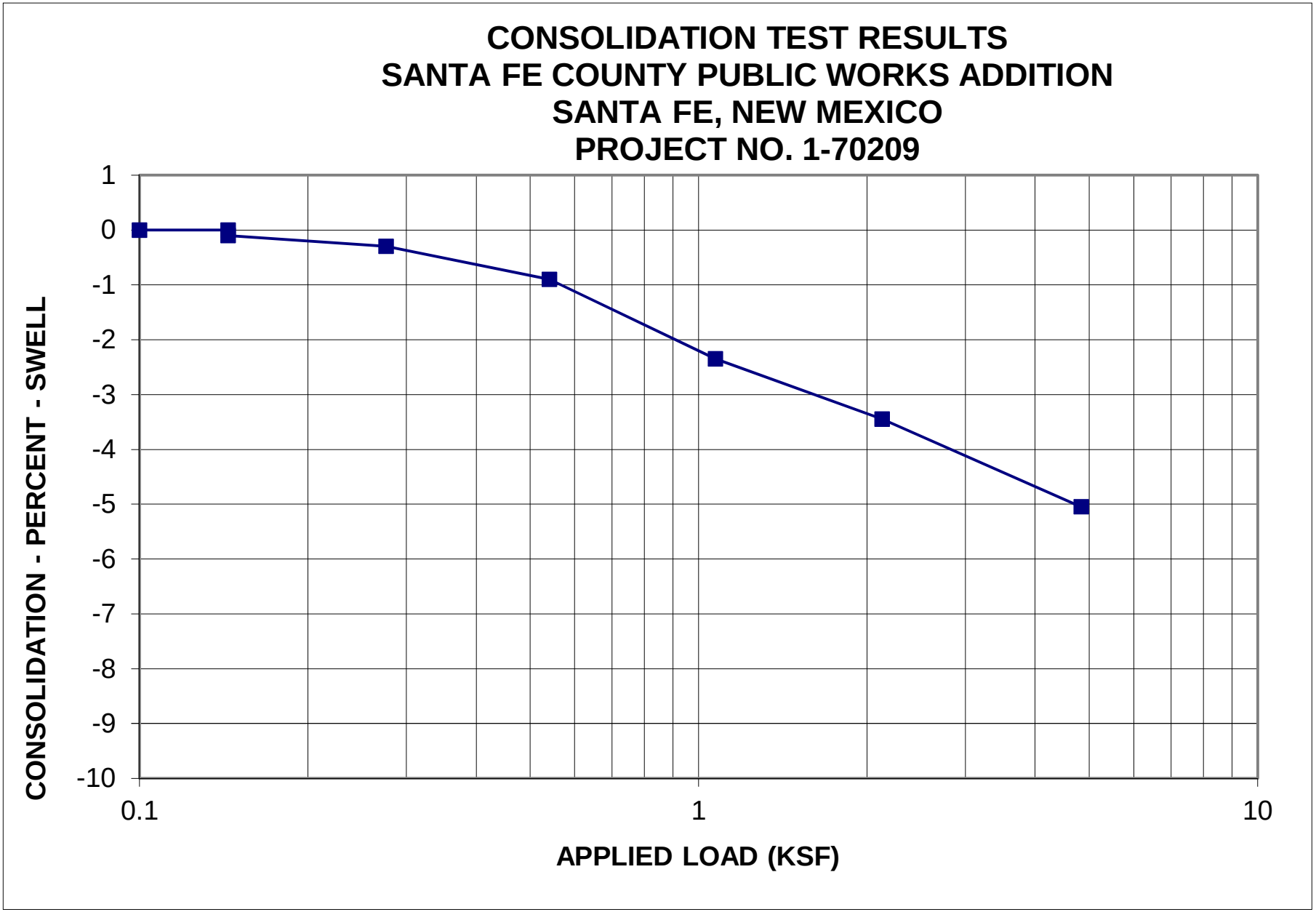

Initial Moisture Content = 13.4%
Initial Dry Density = 109.1 pcf
Boring #4 at 3'

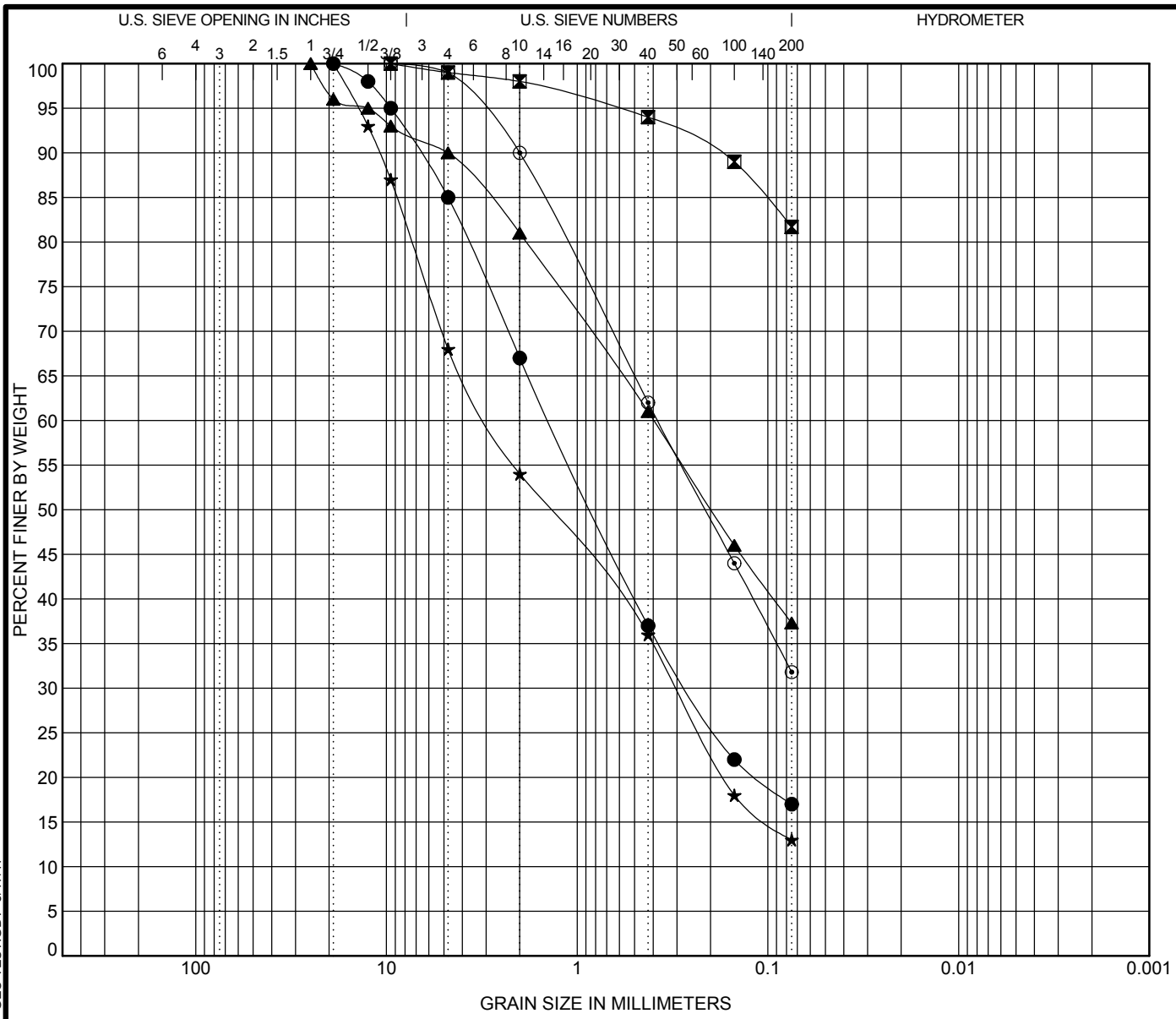

COBBLES	GRAVEL		SAND			SILT OR CLAY
	coarse	fine	coarse	medium	fine	

	Specimen Identification		Classification	LL	PL	PI	Cc	Cu
●	01	3.0	**SILTY SAND with GRAVEL(SM)**	**NP**	**NP**	**NP**		
⊠	02	5.5	**LEAN CLAY with SAND(CL)**	**46**	**23**	**23**		
▲	03	1.0	**CLAYEY SAND(SC)**	**30**	**20**	**10**		
★	03	10.0	**SILTY SAND with GRAVEL(SM)**	**NP**	**NP**	**NP**		
⊙	04	3.0	**CLAYEY SAND(SC)**	**32**	**20**	**12**		

	Specimen Identification		D100	D60	D30	D10	%Gravel	%Sand	%Silt	%Clay
●	01	3.0	**19**	**1.393**	**0.261**		**15.0**	**68.0**	**17.0**	
⊠	02	5.5	**9.5**				**1.0**	**17.3**	**81.7**	
▲	03	1.0	**25**	**0.396**			**10.0**	**52.7**	**37.3**	
★	03	10.0	**19**	**2.898**	**0.3**		**32.0**	**55.0**	**13.0**	
⊙	04	3.0	**9.5**	**0.379**			**1.0**	**67.2**	**31.8**	

GEO-TEST

GRAIN SIZE DISTRIBUTION

Project: Public Works Property Control Facility Additions

Location: Santa Fe, NM

Number: 1-70209

US GRAIN SIZE 1-70209 SANTA FE COUNTY PUBLIC WORKS PROPERTY CONTROL FACILITY.GPJ GEO TEST.GDT 3/17/17

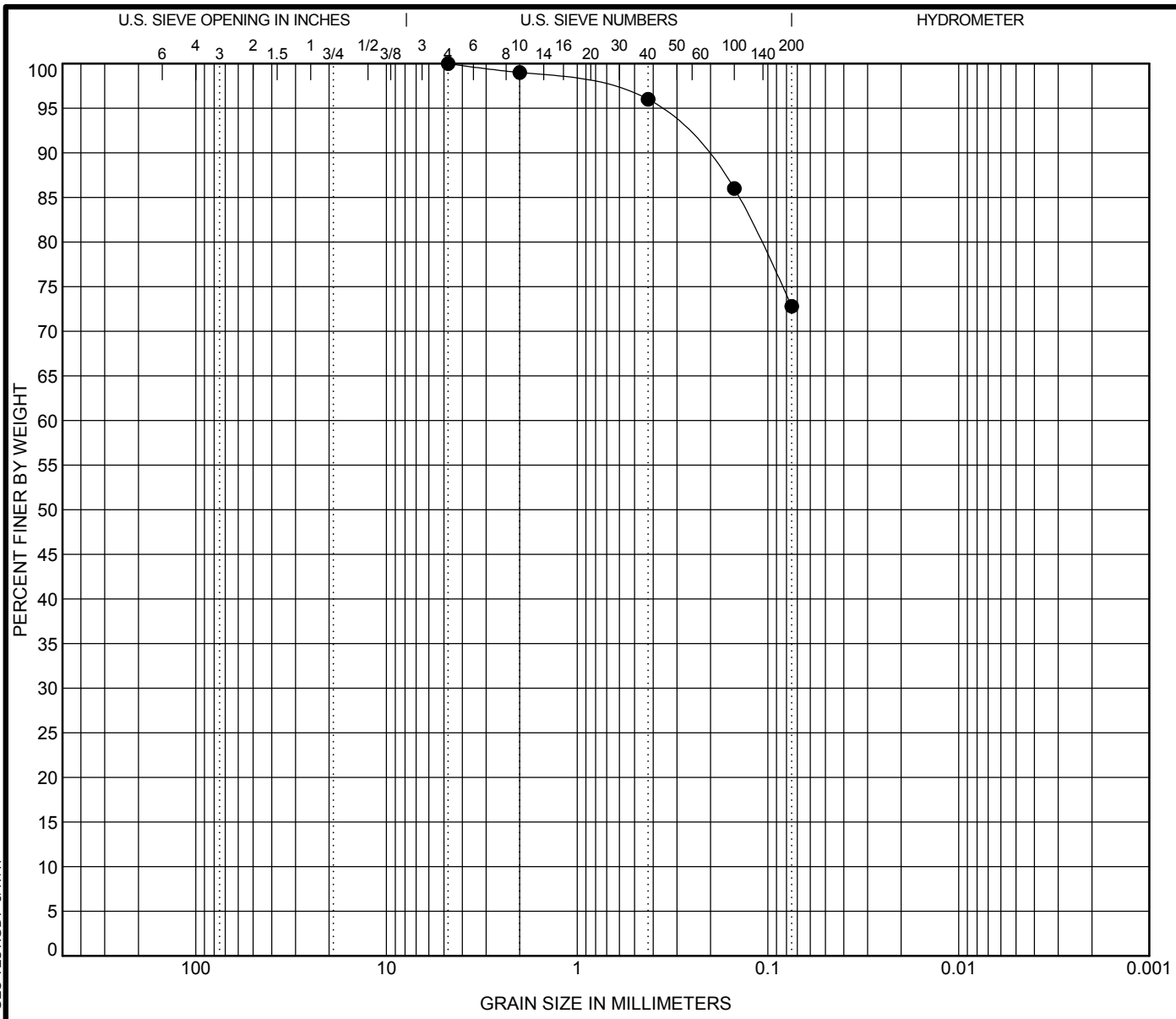

COBBLES	GRAVEL		SAND			SILT OR CLAY
	coarse	fine	coarse	medium	fine	

	Specimen Identification		Classification	LL	PL	PI	Cc	Cu
●	**04**	**5.0**	**LEAN CLAY with SAND(CL)**	**42**	**22**	**20**		

	Specimen Identification		D100	D60	D30	D10	%Gravel	%Sand	%Silt	%Clay
●	**04**	**5.0**	**4.75**				**0.0**	**27.2**	**72.8**	

GEO-TEST

GRAIN SIZE DISTRIBUTION

Project: Public Works Property Control Facility Additions

Location: Santa Fe, NM

Number: 1-70209

US GRAIN SIZE 1-70209 SANTA FE COUNTY PUBLIC WORKS PROPERTY CONTROL FACILITY.GPJ GEO TEST.GDT 3/17/17

SECTION 01 10 00 – SUMMARY

PART 1 - GENERAL

1.1 RELATED DOCUMENTS

A. Drawings and general provisions of the Contract, including General and Supplementary Conditions and other Division 1 Specification Sections, apply to this Section.

1.2 SUMMARY

A. This Section includes the following:

1. Work covered by the Contract Documents.
2. Type of the Contract.
3. Work phases.
4. Use of premises.
5. Owner's occupancy requirements.
6. Work restrictions.
7. Specification formats and conventions.

1.3 WORK COVERED BY CONTRACT DOCUMENTS

A. Project Identification: Santa Fe County Public Works Department; New Property Control Facility

1. Project Location: 424 NM 599 Santa Fe NM 87507

B. Owner: Santa Fe County Public Works Department

1. Owner's Representative: Michael Kelly – Public Works Director.

C. Architect: Baer Architecture 227 East Palace Ave Santa Fe NM 87501 with McClain + Yu Architecture & Design 2009 Ridgecrest Dr. SE Albuquerque NM 87108

D. Project Manager: Brad Isaacson has been appointed by the Owner to serve as Santa Fe County Public Works Department Project Manager.

E. The Work includes the following, but is not limited to: Selective demolition of existing exterior improvements, Site Grading for Building Slab/Foundation and Site Drainage. Concrete Foundations and Site Paving (Concrete and Asphaltic). Metal Building Structure, Metal Decking, and Structural Stud Framing. Wood Blocking. Thermal Insulation, Metal Wall Panels, TPO Roofing, Sealants. Hollow Metal Doors and Frames, Aluminum Storefront, Overhead Coiling Door, Hardware, and Glazing. Interior Framing with Gypsum Board, Acoustical Ceiling Tile, VCT, Vinyl Accessories, and Painting. Signage, Toilet Compartments, Fire Extinguishers, and Metal Locker. Plumbing, HVAC Equipment with Ductwork, Electrical, Fire Alarm and Communications work.

1.4 TYPE OF CONTRACT

A. Project will be constructed under a Prime Contract.

1.5 WORK UNDER OTHER CONTRACTS

A. General:
1. Cooperate fully with separate contractors so work on those contracts may be carried out smoothly, without interfering with or delaying work under this Contract. Coordinate the Work of this Contract with work performed under separate contracts.
a. None anticpated.

2. The Owner may have additional work performed primarily on the infrastructure utilities, by other contractors or their own forces.

1.6 USE OF PREMISES

A. General: Contractor shall have full use of the defined premises for work of this Contract, including use of limited defined Project site. Contractor's use of premises is limited only by Owner's right to perform work or to retain other contractors on portions of Project.

1.7 OWNER'S OCCUPANCY REQUIREMENTS

A. Full Owner Occupancy: Owner will occupy the adjacent building areas, site and adjacent buildings, during the Contract period. Cooperate with Owner during the work to minimize conflicts and facilitate Owner usage of the adjacent building areas, site and adjacent buildings. Perform the Work so arranged with the Owner’s representative.

1. Maintain access to existing walkways, corridors, and other adjacent occupied or used facilities. Do not close or obstruct walkways, corridors, or other occupied or used facilities without written permission from Owner and authorities having jurisdiction.
2. Provide not less than 72 hours' notice to Owner of activities that will affect Owner's operations.

1.8 WORK RESTRICTIONS

A. On-Site Work Hours: Work shall be generally performed inside the existing building and/or designated area of Work during normal business working hours of 7:00 a.m. to 5:00 p.m., Monday through Friday, except otherwise indicated.

1. Coordinate with Santa Fe County Public Works Department representatives for extended work hours as needed.

B. Existing Utility Interruptions: Do not interrupt utilities serving facilities occupied by Owner or others unless permitted under the following conditions and then only after arranging to provide temporary utility services according to requirements indicated:

1. Notify Architect and Owner not less than five days in advance of proposed utility interruptions.
2. Do not proceed with utility interruptions without and Owner's written permission.

1.9 SPECIFICATION FORMATS AND CONVENTIONS

A. Specification Format: The Specifications are organized into Divisions and Sections using the 33-division format and CSI/CSC's "Master Format" numbering system.

1. Section Identification: The Specifications use Section numbers and titles to help cross-referencing in the Contract Documents. Sections in the Project Manual are in numeric sequence; however, the sequence is incomplete because all available Section numbers are not used. Consult the table of contents at the beginning of the Project Manual to determine numbers and names of Sections in the Contract Documents.
2. Division 1: Sections in Division 1 govern the execution of the Work of all Sections in the Specifications.

B. Specification Content: The Specifications use certain conventions for the style of language and the intended meaning of certain terms, words, and phrases when used in particular situations. These conventions are as follows:

1. Abbreviated Language: Language used in the Specifications and other Contract Documents is abbreviated. Words and meanings shall be interpreted as appropriate. Words implied, but not stated, shall be inferred as the sense requires. Singular words shall be interpreted as plural, and plural words shall be interpreted as singular where applicable as the context of the Contract Documents indicates.
2. Imperative mood and streamlined language are generally used in the Specifications. Requirements expressed in the imperative mood are to be performed by Contractor. Occasionally, the indicative or subjunctive mood may be used in the Section Text for clarity to describe responsibilities that must be fulfilled indirectly by Contractor or by others when so noted.

a. The words "shall," "shall be," or "shall comply with," depending on the context, are implied where a colon (:) is used within a sentence or phrase.

1.10 MISCELLANEOUS PROVISIONS

PART 2 - PRODUCTS (Not Used)

PART 3 - EXECUTION (Not Used)

END OF SECTION 01 10 00

SECTION 01 23 00 - ALTERNATES

PART 1 - GENERAL

1.1 RELATED DOCUMENTS:

A. Drawings and general provisions of the Contract, including General and Supplementary Conditions and other Division 1 Specification Sections, apply to this Section.

1.2 SUMMARY:

A. This Section includes administrative and procedural requirements for alternates.

1.3 DEFINITIONS

A. Alternate: An amount proposed by bidders and stated on the Bid Form for certain work defined in the Bidding Requirements that may be added to or deducted from the Base Bid amount if Owner decides to accept a corresponding change either in the amount of construction to be completed or in the products, materials, equipment, systems, or installation methods described in the Contract Documents.

1. The cost or credit for each alternate is the net addition to or deduction from the Contract Sum to incorporate alternate into the Work. No other adjustments are made to the Contract Sum.

1.4 PROCEDURES

A. Coordination: Modify or adjust affected adjacent work as necessary to completely integrate work of the alternate into Project.

1. Include as part of each alternate, cost of related coordination miscellaneous devices, accessory objects, and similar items incidental to or required for a complete installation whether or not indicated as part of alternate.

B. Notification: Immediately following award of the Contract, notify each party involved, in writing, of the status of each alternate. Indicate if alternates have been accepted, rejected, or deferred for later consideration. Include a complete description of negotiated modifications to alternates.

C. Execute accepted alternates under the same conditions as other work of the Contract.

D. Schedule: A Schedule of Alternates is included at the end of this Section. Specification Sections referenced in schedule contain requirements for materials necessary to achieve the work described under each alternate.

1.5 PRODUCTS

(Not Used

PART 2 - EXECUTION

2.1 SCHEDULE OF ALTERNATES

A. Additive Alternate No. 1: Provide and install Vehicle Storage Shelter indicated by the drawings and specifications. Concrete foundations with Anchor Bolts are Base Bid.

END OF SECTION 01 23 00

SECTION 01 26 00 - CONTRACT MODIFICATION PROCEDURES

PART 1 - GENERAL

1.1 RELATED DOCUMENTS

A. Drawings and general provisions of the Contract, including General and Supplementary Conditions and other Division 01 Specification Sections, apply to this Section.

1.2 SUMMARY

A. This Section specifies administrative and procedural requirements for handling and processing Contract modifications.

B. Related Sections include the following:
   1. Division 01 Section "Product Requirements" for administrative procedures for handling requests for substitutions made after Contract award.

1.3 MINOR CHANGES IN THE WORK

A. Architect will issue supplemental instructions authorizing Minor Changes in the Work, not involving adjustment to the Contract Sum or the Contract Time, on AIA Document G710, "Architect's Supplemental Instructions."

1.4 PROPOSAL REQUESTS

A. Owner-Initiated Proposal Requests: Architect will issue a detailed description of proposed changes in the Work using AIA Document G709 “Work Changes Proposal Request” that may require adjustment to the Contract Sum or the Contract Time. If necessary, the description will include supplemental or revised Drawings and Specifications.

   1. Proposal Requests issued by Architect are for information only. Do not consider them instructions either to stop work in progress or to execute the proposed change.
   2. Within time specified in Proposal Request after receipt of Proposal Request, submit a quotation estimating cost adjustments to the Contract Sum and any Contract Time necessary to execute the change.

      a. Include a list of quantities of products required or eliminated and unit costs, with total amount of purchases and credits to be made. If requested, furnish survey data to substantiate quantities.
      b. Indicate applicable taxes, delivery charges, equipment rental, and amounts of trade discounts.
         1) Do not include New Mexico Gross Receipts Tax as part of proposals.
      c. Include costs of labor and supervision directly attributable to the change.
      d. Include an updated Contractor's Construction Schedule that indicates the effect of the change, including, but not limited to, changes in activity duration, start and finish times, and activity relationship. Use available total float before requesting an extension of the Contract Time.

B. Contractor-Initiated Proposals: If latent or unforeseen conditions require modifications to the Contract, Contractor may propose changes by submitting a request for a change to Architect.

1. Include a statement outlining reasons for the change and the effect of the change on the Work. Provide a complete description of the proposed change. Indicate the effect of the proposed change on the Contract Sum and the Contract Time.
2. Include a list of quantities of products required or eliminated and unit costs, with total amount of purchases and credits to be made. If requested, furnish survey data to substantiate quantities.
3. Indicate applicable taxes, delivery charges, equipment rental, and amounts of trade discounts.
   a. Do not include New Mexico Gross Receipts Tax as part of the request.
4. Include costs of labor and supervision directly attributable to the change.
5. Include an updated Contractor's Construction Schedule that indicates the effect of the change, including, but not limited to, changes in activity duration, start and finish times, and activity relationship. Use available total float before requesting an extension of the Contract Time.
6. Comply with requirements in Division 01 Section "Product Requirements" if the proposed change requires substitution of one product or system for product or system specified.

C. Proposal Request Form: Owner initiated Proposal Request will use AIA Document G709 for Proposal Requests.

1.5 CHANGE ORDER PROCEDURES

A. On Owner's approval of a Proposal Request, Architect will issue a Change Order for signatures of Owner and Contractor on AIA Document G701.

1.6 CONSTRUCTION CHANGE DIRECTIVE

A. Construction Change Directive: Architect may issue a Construction Change Directive on AIA Document G714 Construction Change Directive instructs Contractor to proceed with a change in the Work, for subsequent inclusion in a Change Order.

1. Construction Change Directive contains a complete description of change in the Work. It also designates method to be followed to determine change in the Contract Sum or the Contract Time.

B. Documentation: Maintain detailed records on a time and material basis of work required by the Construction Change Directive.

1. After completion of change, submit an itemized account and supporting data necessary to substantiate cost and time adjustments to the Contract.

PART 2 - PRODUCTS (Not Used)

PART 3 - EXECUTION (Not Used)

END OF SECTION 01 26 00

SECTION 01 29 00 - PAYMENT PROCEDURES

PART 1 - GENERAL

1.1 RELATED DOCUMENTS

A. Drawings and general provisions of the Contract, including General and Supplementary Conditions and other Division 01 Specification Sections, apply to this Section.

1.2 SUMMARY

A. This Section specifies administrative and procedural requirements necessary to prepare and process Applications for Payment.

B. Related Sections include the following:
1. Division 01 Section "Contract Modification Procedures" for administrative procedures for handling changes to the Contract.
2. Division 01 Section "Construction Progress Documentation" for administrative requirements governing preparation and submittal of Contractor's Construction Schedule and Submittals Schedule.
3. Division 01 Section “Closeout Procedures”.

1.3 DEFINITIONS

A. Schedule of Values: A statement furnished by Contractor allocating portions of the Contract Sum to various portions of the Work and used as the basis for reviewing Contractor's Applications for Payment.

1.4 SCHEDULE OF VALUES

A. Coordination: Coordinate preparation of the Schedule of Values with preparation of Contractor's Construction Schedule.

1. Correlate line items in the Schedule of Values with other required administrative forms and schedules, including the following:

   a. Application for Payment forms with Continuation Sheets.
   b. Submittals Schedule.
   c. Contractor's Construction Schedule.
   d. Contract Closeout Activities and Procedures.

2. Submit the Schedule of Values to Architect at earliest possible date but no later than seven days before the date scheduled for submittal of initial Applications for Payment.

B. Format and Content: Use the Project Manual table of contents as a guide to establish line items for the Schedule of Values. Provide sufficient line items to permit the Contractor to establish a basis for the billing of completed work and its revision by the Architect.

1. Identification: Include the following Project identification on the Schedule of Values:
   a. Project name and location.
   b. Name of Architect.
   c. Architect's project number.
   d. Contractor's name and address.
   e. Date of submittal.
2. Submit draft of AIA Document G703 Continuation Sheets.

3. Arrange the Schedule of Values in tabular form with separate columns to indicate the following for each item listed:

   a. Related Specification Section or Division.
   b. Description of the Work.
   c. Change Orders (numbers) that affect value.
   d. Dollar value.

      1) Percentage of the Contract Sum to nearest one-hundredth percent, adjusted to total 100 percent.

4. Provide a breakdown of the Contract Sum in enough detail to facilitate continued evaluation of Applications for Payment and progress reports. Coordinate with the Project Manual table of contents. Provide several line items for principal subcontract amounts, where appropriate.
5. Round amounts to nearest whole dollar; total shall equal the Contract Sum.
6. Provide a separate line item in the Schedule of Values for each part of the Work where Applications for Payment may include materials or equipment purchased or fabricated and stored, but not yet installed.
7. Provide separate line items in the Schedule of Values for initial cost of materials, for each subsequent stage of completion, and for total installed value of that part of the Work.
8. Each item in the Schedule of Values and Applications for Payment shall be complete. Include total cost and proportionate share of general overhead and profit for each item.

   a. Temporary facilities and other major cost items that are not direct cost of actual work-in-place may be shown either as separate line items in the Schedule of Values or distributed as general overhead expense, at Contractor's option.

   b. **Closeout Procedures Value**: As part of the Schedule of Values, include a Project Closeout Line Item of $10,000 or 1% of the Construction Cost, whichever is greater for Project Closeout Activities. The Contractor shall not be paid any amount on this line item until **ALL** closeout items have been completed.

9. Schedule Updating: Update and resubmit the Schedule of Values before the next Applications for Payment when Change Orders or Construction Change Directives result in a change in the Contract Sum.

1.5 APPLICATIONS FOR PAYMENT

A. Each Application for Payment shall be consistent with previous applications and payments as certified by Architect and paid for by Owner.

   1. Initial Application for Payment, Application for Payment at time of Substantial Completion, and final Application for Payment involve additional requirements.

B. Payment Application Times: The date for each progress payment is indicated in the Agreement between Owner and Contractor. The period of construction Work covered by each Application for Payment is the period indicated in the Agreement.

C. Payment Application Forms: Use AIA Document G702 and AIA Document G703 Continuation Sheets as form for Applications for Payment.

D. Application Preparation: Complete every entry on form. Notarize and execute by a person authorized to sign legal documents on behalf of Contractor. Architect will return incomplete applications without action.

1. Entries shall match data on the Schedule of Values and Contractor's Construction Schedule. Use updated schedules if revisions were made.
2. Include amounts of Change Orders and Construction Change Directives issued before last day of construction period covered by application.

E. Transmittal: Submit 3 signed and notarized original copies of each Application for Payment to Architect by a method ensuring receipt within 24 hours. One copy shall include waivers of lien and similar attachments if required.

1. Transmit each copy with a transmittal form listing attachments and recording appropriate information about application.

F. Waivers of Mechanic's Lien: With each Application for Payment, submit waivers of mechanic's lien from every entity who is lawfully entitled to file a mechanic's lien arising out of the Contract and related to the Work covered by the payment.
1. When an application shows completion of an item, submit final or full waivers.
2. Waiver Forms: Submit waivers of lien on forms, executed in a manner acceptable to Owner.

G. Substantiating Data for Progress Payments:

1. Attach to the G703's a schedule of all materials stored on the site which are included thereon. This schedule should indicate the monthly status of those materials. The first time the materials appear on the schedule, one copy of the invoice, shipping ticket, or other substantiating document should be attached to the schedule.

2. For sensitive materials which are not stored on the site for which the Contractor requests payment, the following procedure shall be precisely followed to request such approval. The Contractor shall submit a letter through the Architect to the Owner so that it is received by the Owner no later than the 20th of the month. The letter shall forward one copy of the invoice for the materials being considered and shall state the supplier, material, invoice number, and the amount. The letter shall be signed by a responsible officer of the Contractor stating that the following responsibilities are certified.

   a. That material now stored in our warehouse will be installed on this project.
   b. That it is covered by our insurance while so stored.
   c. That it will be transported to the site.
   d. That it is physically identified as property for this project.

3. Those items for which Owner provides written approval may be included with that month's application for payment.

4. As a prior condition for payment, the Contractor must comply with the following:
   a. Demonstrate that the record drawing "as-builts" are being kept up to date.
   b. Revise the project schedule to reflect the current state of completion.

H. Initial Application for Payment: Administrative actions and submittals that must precede or coincide with submittal of first Application for Payment include the following:

1. List of subcontractors.
2. Schedule of Values.
3. Contractor's Construction Schedule (preliminary if not final).
4. Submittals Schedule (preliminary if not final).
5. Copies of authorizations and licenses from authorities having jurisdiction for performance of the Work.

6. Initial progress report.

I. Application for Payment at Substantial Completion: After issuing the Certificate of Substantial Completion, submit an Application for Payment showing 100 percent completion for portion of the Work claimed as substantially complete.

1. Include documentation supporting claim that the Work is substantially complete and a statement showing an accounting of changes to the Contract Sum.
2. This application shall reflect Certificates of Partial Substantial Completion issued previously for Owner occupancy of designated portions of the Work.

J. Final Payment Application: Submit final Application for Payment with releases and supporting documentation not previously submitted and accepted, including, but not limited, to the following:

1. Evidence of completion of Project closeout requirements.
2. Insurance certificates for products and completed operations where required and proof that taxes, fees, and similar obligations were paid.
3. Updated final statement, accounting for final changes to the Contract Sum.
4. AIA Document G706, "Contractor's Affidavit of Payment of Debts and Claims."
5. AIA Document G706A, "Contractor's Affidavit of Release of Liens."
6. AIA Document G707, "Consent of Surety to Final Payment."
7. Evidence that claims have been settled.
8. Final, liquidated damages settlement statement.

PART 2 - PRODUCTS (Not Used)

PART 3 - EXECUTION (Not Used)

END OF SECTION 01 29 00

SECTION 01 31 00 - PROJECT MANAGEMENT AND COORDINATION

PART 1 - GENERAL

1.1 RELATED DOCUMENTS

A. Drawings and general provisions of the Contract, including General and Supplementary Conditions and other Division 01 Specification Sections, apply to this Section.

1.2 SUMMARY

A. This Section includes administrative provisions for coordinating construction operations on Project including, but not limited to, the following:

1. Coordination Drawings.
2. Administrative and supervisory personnel.
3. Project meetings.
4. Requests for Interpretation or Information (RFIs).

B. Each contractor shall participate in coordination requirements. Certain areas of responsibility will be assigned to a specific contractor.

C. Related Sections include the following:
1. Division 01 Section "Construction Progress Documentation" for preparing and submitting Contractor's Construction Schedule.
2. Division 01 Section "Execution" for procedures for coordinating general installation and field-engineering services, including establishment of benchmarks and control points.
3. Division 01 Section "Closeout Procedures" for coordinating closeout of the Contract.

1.3 DEFINITIONS

A. RFI: Request from Contractor seeking interpretation, information or clarification of the Contract Documents.

1.4 COORDINATION

A. Coordination: Coordinate construction operations included in different Sections of the Specifications to ensure efficient and orderly installation of each part of the Work. Coordinate construction operations, included in different Sections that depend on each other for proper installation, connection, and operation.

B. Prepare memoranda for distribution to each party involved, outlining special procedures required for coordination. Include such items as required notices, reports, and list of attendees at meetings.

C. Administrative Procedures: Coordinate scheduling and timing of required administrative procedures with other construction activities and activities of other contractors to avoid conflicts and to ensure orderly progress of the Work. Such administrative activities include, but are not limited to, the following:

1. Preparation of Contractor's Construction Schedule.

2. Preparation of the Schedule of Values.
3. Installation and removal of temporary facilities and controls.
4. Delivery and processing of submittals.
5. Progress meetings.
6. Preinstallation conferences.
7. Project closeout activities.
8. Startup and adjustment of systems.
9. Project closeout activities.

D. Conservation: Coordinate construction activities to ensure that operations are carried out with consideration given to conservation of energy, water, and materials.

1. Salvage materials and equipment involved in performance of, but not actually incorporated into, the Work. Refer to other Sections for disposition of construction waste and recycling requirements.

1.5 SUBMITTALS

A. Coordination Drawings: Prepare Coordination Drawings as limited space availability necessitates maximum utilization of space for efficient installation of different components or if coordination is required for installation of products and materials fabricated by separate entities.

1. Content: Project-specific information, drawn accurately to scale. Do not base Coordination Drawings on reproductions of the Contract Documents or standard printed data. Include the following information, as applicable:
   a. Indicate functional and spatial relationships of components of architectural, structural, civil, mechanical, and electrical systems.
   b. Indicate required installation sequences.
   c. Indicate dimensions shown on the Contract Drawings and make specific note of dimensions that appear to be in conflict with submitted equipment and minimum clearance requirements. Provide alternate sketches to Architect for resolution of such conflicts. Minor dimension changes and difficult installations will not be considered changes to the Contract.

2. Sheet Size: At least 8-1/2 by 11 inches (215 by 280 mm) but no larger than 30 by 42 inches (750 by 1000 mm).
3. Number of Copies: Submit three opaque copies of each submittal. Architect, will return one copy.

4. Refer to individual Sections for Coordination Drawing requirements for Work in those Sections.

B. Key Personnel Names: Within 5 days of starting construction operations, submit a list of key personnel assignments, including superintendent and other personnel in attendance at Project site. Identify individuals and their duties and responsibilities; list addresses and telephone numbers, including home and office telephone numbers. Provide names, addresses, and telephone numbers of individuals assigned as standbys in the absence of individuals assigned to Project.

1. Post copies of list in Project meeting room, in temporary field office, and by each temporary telephone. Keep list current at all times.

1.6 ADMINISTRATIVE AND SUPERVISORY PERSONNEL

A. General: In addition to Project superintendent, provide other administrative and supervisory personnel as required for proper performance of the Work.

1. Include special personnel required for coordination of operations with other contractors.

1.7 PROJECT MEETINGS

A. General: Schedule and conduct meetings and conferences at Project site, unless otherwise indicated.

1. Attendees: Inform participants and others involved, and individuals whose presence is required, of date and time of each meeting. Notify Owner and Architect of scheduled meeting dates and times.
2. Agenda: Prepare the meeting agenda. Distribute the agenda to all invited attendees.
3. Minutes: Record significant discussions and agreements achieved. Distribute the meeting minutes to everyone concerned, including Owner and Architect, within three days of the meeting.

B. Preconstruction Conference: Schedule a preconstruction conference before starting construction, at a time convenient to Owner and Architect, but no later than 10 days after execution of the Agreement. Hold the conference at Project site or another convenient location. Conduct the meeting to review responsibilities and personnel assignments.

1. Attendees: Authorized representatives of Owner, Architect, and their consultants; Contractor and its superintendent; major subcontractors; suppliers; and other concerned parties shall attend the conference. All participants at the conference shall be familiar with Project and authorized to conclude matters relating to the Work.
2. Agenda: Discuss items of significance that could affect progress, including the following:

a. Tentative construction schedule.
b. Phasing (if applicable).
c. Critical work sequencing and long-lead items.
d. Designation of key personnel and their duties.
e. Procedures for processing field decisions and Change Orders.
f. Procedures for RFIs.
g. Procedures for testing and inspecting.
h. Procedures for processing Applications for Payment.
i. Distribution of the Contract Documents.
j. Submittal procedures.
k. Preparation of Record Documents.
l. Use of the premises and existing building.
m. Work restrictions.
n. Owner's occupancy requirements.
o. Responsibility for temporary facilities and controls.
p. Construction waste management and recycling.
q. Parking availability.
r. Office, work, and storage areas.
s. Equipment deliveries and priorities.

t. First aid.
u. Security.
v. Progress cleaning.
w. Working hours.

3. Minutes: Record and distribute meeting minutes.

C. Preinstallation Conferences: Conduct a preinstallation conference at Project site before each construction activity that requires coordination with other construction.

1. Attendees: Installer and representatives of manufacturers and fabricators involved in or affected by the installation and its coordination or integration with other materials and installations that have preceded or will follow, shall attend the meeting. Advise Architect of scheduled meeting dates.
2. Agenda: Review progress of other construction activities and preparations for the particular activity under consideration, including requirements for the following:

a. The Contract Documents.
b. Options.
c. Related RFIs.
d. Related Change Orders.
e. Purchases.
f. Deliveries.
g. Submittals.
h. Review of mockups.
i. Possible conflicts.
j. Compatibility problems.
k. Time schedules.
l. Weather limitations.
m. Manufacturer's written recommendations.
n. Warranty requirements.
o. Compatibility of materials.
p. Acceptability of substrates.
q. Temporary facilities and controls.
r. Space and access limitations.
s. Regulations of authorities having jurisdiction.
t. Testing and inspecting requirements.
u. Installation procedures.
v. Coordination with other work.
w. Required performance results.
x. Protection of adjacent work.
y. Protection of construction and personnel.

3. Record significant conference discussions, agreements, and disagreements, including required corrective measures and actions.
4. Reporting: Distribute minutes of the meeting to each party present and to parties who should have been present.
5. Do not proceed with installation if the conference cannot be successfully concluded. Initiate whatever actions are necessary to resolve impediments to performance of the Work and reconvene the conference at earliest feasible date.

D. Progress Meetings: Conduct progress meetings at every other week intervals. Coordinate dates of meetings with preparation of payment requests.

1. Attendees: In addition to representatives of Owner and Architect, each contractor, subcontractor, supplier, and other entity concerned with current progress or involved in planning, coordination, or performance of future activities shall be represented at these meetings. All participants at the conference shall be familiar with Project and authorized to conclude matters relating to the Work.
2. Agenda: Review and correct or approve minutes of previous progress meeting. Review other items of significance that could affect progress. Include topics for discussion as appropriate to status of Project.

    a. Contractor's Construction Schedule: Review progress since the last meeting. Determine whether each activity is on time, ahead of schedule, or behind schedule, in relation to Contractor's Construction Schedule. Determine how construction behind schedule will be expedited; secure commitments from parties involved to do so. Discuss whether schedule revisions are required to ensure that current and subsequent activities will be completed within the Contract Time.

        1) Review schedule for next period.

    b. Review present and future needs of each entity present, including the following:

        1) Interface requirements.
        2) Sequence of operations.
        3) Status of submittals.
        4) Deliveries.
        5) Off-site fabrication.
        6) Access.
        7) Site utilization.
        8) Temporary facilities and controls.
        9) Work hours.
        10) Hazards and risks.
        11) Progress cleaning.
        12) Quality and work standards.
        13) Status of correction of deficient items.
        14) Field observations.
        15) RFIs.
        16) Status of proposal requests.
        17) Pending changes.
        18) Status of Change Orders.
        19) Pending claims and disputes.
        20) Documentation of information for payment requests.

3. Minutes: Record the meeting minutes.
4. Reporting: Distribute minutes of the meeting to each party present and to parties who should have been present.

    a. Schedule Updating: Revise Contractor's Construction Schedule after each progress meeting where revisions to the schedule have been made or recognized. Issue revised schedule concurrently with the report of each meeting.

E. Coordination Meetings: Conduct Project coordination meetings as required by the work and in advance of the work so as to not impact the schedule. Project coordination meetings are in addition to specific meetings held for other purposes, such as progress meetings and preinstallation conferences. The Contractor is to conduct regular additional coordination meetings not attended by the Owner and Architect as required.

1. Attendees: In addition to representatives of Owner**,** and Architect, each contractor, subcontractor, supplier, and other entity concerned with current progress or involved in planning, coordination, or performance of future activities shall be represented at these meetings. All participants at the conference shall be familiar with Project and authorized to conclude matters relating to the Work.
2. Agenda: Review and correct or approve minutes of the previous coordination meeting. Review other items of significance that could affect progress. Include topics for discussion as appropriate to status of Project.

   a. Combined Contractor's Construction Schedule: Review progress since the last coordination meeting. Determine whether each contract is on time, ahead of schedule, or behind schedule, in relation to Combined Contractor's Construction Schedule. Determine how construction behind schedule will be expedited; secure commitments from parties involved to do so. Discuss whether schedule revisions are required to ensure that current and subsequent activities will be completed within the Contract Time.
   b. Schedule Updating: Revise Combined Contractor's Construction Schedule after each coordination meeting where revisions to the schedule have been made or recognized. Issue revised schedule concurrently with report of each meeting.
   c. Review present and future needs of each contractor present, including the following:

      1) Interface requirements.
      2) Sequence of operations.
      3) Status of submittals.
      4) Deliveries.
      5) Off-site fabrication.
      6) Access.
      7) Site utilization.
      8) Temporary facilities and controls.
      9) Work hours.
      10) Hazards and risks.
      11) Progress cleaning.
      12) Quality and work standards.
      13) Change Orders.

3. Reporting: Record meeting results and distribute copies to everyone in attendance and to others affected by decisions or actions resulting from each meeting.

1.8 REQUESTS FOR INTERPRETATION, INFORMATION (RFIs)

A. Procedure: Immediately on discovery of the need for interpretation of the Contract Documents, and if not possible to request interpretation at Project meeting, prepare and submit an RFI in the form specified.

1. RFIs shall originate with General Contractor. The General Contractor shall maintain a log of RFI's and their status. RFIs submitted by entities other than General Contractor will be returned with no response.
2. Coordinate and submit RFIs in a prompt manner so as to avoid delays in Contractor's work or work of subcontractors.

B. Content of the RFI: Include a detailed, legible description of item needing interpretation and the following:

1. Project name.
2. Date.
3. Name of Contractor.
4. Name of Architect.
5. RFI number, numbered sequentially.
6. Specification Section number and title and related paragraphs, as appropriate.
7. Drawing number and detail references, as appropriate.
8. Field dimensions and conditions, as appropriate.
9. Contractor's suggested solution(s). If Contractor's solution(s) impact the Contract Time or the Contract Sum, Contractor shall state impact in the RFI.
10. Contractor's signature.
11. Attachments: Include drawings, descriptions, measurements, photos, Product Data, Shop Drawings, and other information necessary to fully describe items needing interpretation.
    a. Supplementary drawings prepared by Contractor shall include dimensions, thicknesses, structural grid references, and details of affected materials, assemblies, and attachments.

C. Hard-Copy RFIs: Submit Contractor's Project Management Software for review.

1. Identify each page of attachments with the RFI number and sequential page number.

D. Software-Generated RFIs: Software-generated form with substantially the same content as indicated above.

1. Attachments shall be electronic files in Adobe Acrobat PDF format.

E. Architect's Action: Architect will review each RFI, determine action required, and return it. Allow a reasonable number of working days, but not less than seven days for Architect's response for each RFI. RFIs received after 1:00 p.m. will be considered as received the following working day.

1. The following RFIs will be returned without action:

    a. Requests for approval of submittals.
    b. Requests for approval of substitutions.
    c. Requests for coordination information already indicated in the Contract Documents.
    d. Requests for adjustments in the Contract Time or the Contract Sum.
    e. Requests for interpretation of Architect's actions on submittals.
    f. Incomplete RFIs or RFIs with numerous errors.

2. Architect's action may include a request for additional information, in which case Architect's time for response will start again.
3. Architect's action on RFIs that may result in a change to the Contract Time or the Contract Sum may be eligible for Contractor to submit Change Proposal according to Division 01 Section "Contract Modification Procedures."

    a. If Contractor believes the RFI response warrants change in the Contract Time or the Contract Sum, notify Architect in writing within 10 days of receipt of the RFI response.

F. On receipt of Architect's action, update the RFI log and immediately distribute the RFI response to affected parties. Review response and notify Architect within seven days if Contractor disagrees with response.
    1. RFI Log: Prepare, maintain, and submit a tabular log of RFIs organized by the RFI number. Submit log at the weekly progress meeting.

PART 2 - PRODUCTS (Not Used)

PART 3 - EXECUTION (Not Used)

END OF SECTION 01 31 00

SECTION 01 32 00 - CONSTRUCTION PROGRESS DOCUMENTATION

PART 1 - GENERAL

1.1 RELATED DOCUMENTS

A. Drawings and general provisions of the Contract, including General and Supplementary Conditions and other Division 01 Specification Sections, apply to this Section.

1.2 SUMMARY

A. This Section includes administrative and procedural requirements for documenting the progress of construction during performance of the Work, including the following:
   1. Preliminary Construction Schedule.
   2. Contractor's Construction Schedule.
   3. Daily construction reports.
   4. Special reports.

B. Related Sections include the following:
   1. Division 01 Section "Payment Procedures" for submitting the Schedule of Values.
   2. Division 01 Section "Project Management and Coordination" for submitting and distributing meeting and conference minutes.
   3. Division 01 Section "Photographic Documentation" for submitting construction photographs.
   4. Division 01 Section "Submittal Procedures" for submitting schedules and reports.

1.3 DEFINITIONS

A. Activity: A discrete part of a project that can be identified for planning, scheduling, monitoring, and controlling the construction project. Activities included in a construction schedule consume time and resources.
   1. Critical activities are activities on the critical path. They must start and finish on the planned early start and finish times.
   2. Predecessor Activity: An activity that precedes another activity in the network.
   3. Successor Activity: An activity that follows another activity in the network.

B. Cost Loading: The allocation of the Schedule of Values for the completion of an activity as scheduled. The sum of costs for all activities must equal the total Contract Sum, unless otherwise approved by Architect.

C. CPM: Critical path method, which is a method of planning and scheduling a construction project where activities are arranged based on activity relationships. Network calculations determine when activities can be performed and the critical path of Project.

D. Critical Path: The longest connected chain of interdependent activities through the network schedule that establishes the minimum overall Project duration and contains no float.

E. Event: The starting or ending point of an activity.

F. Float: The measure of leeway in starting and completing an activity.

1. Float time is not for the exclusive use or benefit of either Owner or Contractor, but is a jointly owned, expiring Project resource available to both parties as needed to meet schedule milestones and Contract completion date.
2. Free float is the amount of time an activity can be delayed without adversely affecting the early start of the successor activity.
3. Total float is the measure of leeway in starting or completing an activity without adversely affecting the planned Project completion date.

G. Fragnet: A partial or fragmentary network that breaks down activities into smaller activities for greater detail.

H. Major Area: A story of construction, a separate building, or a similar significant construction element.

I. Milestone: A key or critical point in time for reference or measurement.

J. Network Diagram: A graphic diagram of a network schedule, showing activities and activity relationships.

K. Resource Loading: The allocation of manpower and equipment necessary for the completion of an activity as scheduled.

1.4 SUBMITTALS

A. Preliminary Construction Schedule: Submit two opaque copies.

B. Contractor's Construction Schedule: Submit two opaque copies of initial schedule, large enough to show entire schedule for entire construction period.

C. Daily Construction Reports: Maintain complete and accurate Daily Construction Reports for submittal upon request.

D. Special Reports: Submit two copies at time of unusual event.

1.5 QUALITY ASSURANCE

A. Scheduling Qualifications: A person experienced in scheduling and reporting for projects of a similar size and scope. Schedules and Reports must be submitted within 3 days of a requested update.

1.6 COORDINATION

A. Coordinate preparation and processing of schedules and reports with performance of construction activities and with scheduling and reporting of separate contractors.

B. Coordinate Contractor's Construction Schedule with the Schedule of Values, list of subcontracts, Submittals Schedule, progress reports, payment requests, and other required schedules and reports.
1. Secure time commitments for performing critical elements of the Work from parties involved.

PART 2 - PRODUCTS

2.1 CONTRACTOR'S CONSTRUCTION SCHEDULE, GENERAL

A. Procedures: Comply with procedures contained in AGC's "Construction Planning & Scheduling."

B. Time Frame: Extend schedule from date established for the Notice to Proceed to date of Substantial Completion.

1. Contract completion date shall not be changed by submission of a schedule that shows an early completion date, unless specifically authorized by Change Order.

C. Activities: Treat each story or separate area as a separate numbered activity for each principal element of the Work. Comply with the following:

1. Activity Duration: Define activities so no activity is longer than 20 days, unless specifically allowed by Architect.
2. Procurement Activities: Include procurement process activities for the following long lead items and major items, requiring a cycle of more than 60 days, as separate activities in schedule. Procurement cycle activities include, but are not limited to, submittals, approvals, purchasing, fabrication, and delivery.
3. Submittal Review Time: Include review and resubmittal times indicated in Division 01 Section "Submittal Procedures" in schedule. Coordinate submittal review times in Contractor's Construction Schedule with Submittals Schedule.
4. Startup and Testing Time: Include not less than 15 work days for startup and testing.
5. Substantial Completion: Indicate completion in advance of date established for Substantial Completion, and allow time for Architect's administrative procedures necessary for certification of Substantial Completion.

D. Constraints: Include constraints and work restrictions indicated in the Contract Documents and as follows in schedule, and show how the sequence of the Work is affected.

1. Phasing: Arrange list of activities on schedule by phase, if applicable.
2. Work by Owner: Include a separate activity for each portion of the Work performed by Owner.
3. Products Ordered in Advance: Include a separate activity for each product. Include delivery date indicated in Division 01 Section "Summary." Delivery dates indicated stipulate the earliest possible delivery date.
4. Owner-Furnished Products: Include a separate activity for each product. Include delivery date indicated in Division 01 Section "Summary." Delivery dates indicated stipulate the earliest possible delivery date.
5. Work Restrictions: Show the effect of the following items on the schedule:
   a. Uninterruptible services.
   b. Partial occupancy before Substantial Completion.
   c. Use of premises restrictions.
   d. Seasonal variations.
   e. Environmental control.
   f. Curing.
   g. Startup and placement into final use and operation.

E. Milestones: Include milestones indicated in the Contract Documents in schedule, including, but not limited to, the Notice to Proceed, Substantial Completion, and Final Completion.

2.2 PRELIMINARY CONSTRUCTION SCHEDULE

A. Bar-Chart Schedule: Submit preliminary horizontal bar-chart-type construction schedule within seven days of date established for the Notice to Proceed.

B. Preparation: Indicate each significant construction activity separately. Identify first workday of each week with a continuous vertical line. Outline significant construction activities for first 60 days of construction. Include skeleton diagram for the remainder of the Work.

2.3 REPORTS

A. Daily Construction Reports: Prepare a daily construction report recording the following information concerning events at Project site:

1. List of subcontractors at Project site.
2. List of separate contractors at Project site (if applicable).
3. Approximate count of personnel at Project site.
4. Equipment at Project site.
5. Material deliveries.
6. High and low temperatures and general weather conditions.
7. Accidents.
8. Meetings and significant decisions.
9. Unusual events (refer to special reports).
10. Stoppages, delays, shortages, and losses.
11. Meter readings and similar recordings.
12. Emergency procedures.
13. Orders and requests of authorities having jurisdiction.
14. Change Orders received and implemented.
15. Construction Change Directives received and implemented.
16. Services connected and disconnected.
17. Equipment or system tests and startups.
18. Partial Completions and occupancies.
19. Substantial Completions authorized.

2.4 SPECIAL REPORTS

A. General: Submit special reports directly to Owner within one day of an occurrence. Distribute copies of report to parties affected by the occurrence.

B. Reporting Unusual Events: When an event of an unusual and significant nature occurs at Project site, whether or not related directly to the Work, prepare and submit a special report. List chain of events, persons participating, response by Contractor's personnel, evaluation of results or effects, and similar pertinent information. Advise Owner in advance when these events are known or predictable.

PART 3 - EXECUTION

3.1 CONTRACTOR'S CONSTRUCTION SCHEDULE

A. Scheduling Consultant: Engage a consultant to provide planning, evaluation, and reporting using scheduling.

1. In-House Option: Owner may waive the requirement to retain a consultant if Contractor employs skilled personnel with experience in scheduling and reporting techniques. Submit qualifications.

B. Contractor's Construction Schedule Updating: At monthly intervals, update schedule to reflect actual construction progress and activities. Issue schedule one week before the regularly scheduled progress meeting.

1. Revise schedule immediately after each meeting or other activity where revisions have been recognized or made. Issue updated schedule concurrently with the report of each such meeting.

C. Distribution: Distribute copies of approved schedule to Architect, Owner, separate contractors, testing and inspecting agencies, and other parties identified by Contractor with a need-to-know schedule responsibility.

1. Post copies in Project meeting rooms and temporary field offices.
2. When revisions are made, distribute updated schedules to the same parties and post in the same locations.

END OF SECTION 01 32 00

SECTION 01 32 33 - PHOTOGRAPHIC DOCUMENTATION

PART 1 - GENERAL

1.1 RELATED DOCUMENTS

A. Drawings and general provisions of the Contract, including General and Supplementary Conditions and other Division 01 Specification Sections, apply to this Section.

1.2 SUMMARY

A. This Section includes administrative and procedural requirements for the following:

1. Preconstruction photographs.
2. Periodic construction photographs as a construction aide.

B. Construction Aid Photographs: Digital photos of construction issues suitable for e-mailing to the Architect. Limit resolution and file size to allow for e-mailing.

C. Related Sections include the following:

1. Division 01 Section "Submittal Procedures" for submitting photographic documentation.
2. Division 01 Section “Temporary Facilities and Controls” for telephone/data services for e-mailing photos from the construction site as a “Construction Aid”.
3. Division 02 Section “Selective Structure Demolition” for documentation of existing conditions prior to the start of work.

1.3 SUBMITTALS

A. Pre Construction Photographs: Photographs and or videos (2 copies each) of existing adjacent buildings and site conditions that could be later construed as damage caused by the demolition and construction activities.

PART 2 - PRODUCTS

2.1 PHOTOGRAPHIC MEDIA

A. Digital Images: Provide images in uncompressed TIFF format, produced by a digital camera with minimum sensor size of 2.0 megapixels, and at an image resolution of not less than 1024 by 768 pixels.

1. Upon agreement digital images smaller than 2 mega pixel minimum suitable for convenient e-mailing will be acceptable.

B. Video Images: Provide videos for playback on generally available equipment in DVD media.

PART 3 - EXECUTION

A. Preconstruction Photographs: Before starting construction], take color, digital photographs and/or videos of Project site and surrounding properties, including existing items to remain during construction, from different vantage points, as directed by Architect.

1. Flag construction limits before taking construction photographs.
2. Take as many as required photographs to show existing conditions adjacent to property before starting the Work.
3. Take additional photographs as required to record settlement or cracking of adjacent structures, pavements, and improvements.

B. Construction Aid Photographs: As the need arises with questions on how to proceed in the field, take digital photographs of conditions to be resolved for e-mailing to the Architect.

END OF SECTION 01 32 33

SECTION 01 33 00 - SUBMITTAL PROCEDURES

PART 1 - GENERAL

1.1 RELATED DOCUMENTS

A. Drawings and general provisions of the Contract, including General and Supplementary Conditions and other Division 01 Specification Sections, apply to this Section.

1.2 SUMMARY

A. This Section includes administrative and procedural requirements for submitting Shop Drawings, Product Data, Samples, and other submittals.

B. Related Sections include the following:

1. Division 01 Section "Payment Procedures" for submitting Applications for Payment and the Schedule of Values.
2. Division 01 Section "Project Management and Coordination" for submitting and distributing meeting and conference minutes and for submitting Coordination Drawings.
3. Division 01 Section "Construction Progress Documentation" for submitting schedules and reports, including Contractor's Construction Schedule and the Submittals Schedule.
4. Division 01 Section "Photographic Documentation" for submitting construction photographs.
5. Division 01 Section "Quality Requirements" for submitting test and inspection reports.
6. Division 01 Section "Closeout Procedures" for submitting warranties.
7. Division 01 Section "Project Record Documents" for submitting Record Drawings, Record Specifications, and Record Product Data.
8. Division 01 Section "Operation and Maintenance Data" for submitting operation and maintenance manuals.
9. Divisions 02 through 49 Sections for specific requirements for submittals in those Sections.

1.3 DEFINITIONS

A. Action Submittals: Written and graphic information that requires Architect's responsive action.

B. Informational Submittals: Written information that does not require Architect's responsive action. Submittals may be rejected for not complying with requirements.

1.4 SUBMITTAL PROCEDURES

A. General: Electronic copies of CAD Drawings of the Contract Drawings will not be provided by Architect for Contractor's use in preparing submittals, except as indicated below:

1. At the request of the Contractor and approval of the Owner, CAD drawing files may be obtained upon signing of requested release forms controlling the use of these files for specific use in the Work of this project. Request to provide files in a “software release versions” other than the version they were drawn in may be subject to cost charges for the time required to make such changes and any special administrative handling cost.

B. Coordination: Coordinate preparation and processing of submittals with performance of construction activities.

1. Coordinate each submittal with fabrication, purchasing, testing, delivery, other submittals, and related activities that require sequential activity.
2. Coordinate transmittal of different types of submittals for related parts of the Work so processing will not be delayed because of need to review submittals concurrently for coordination.

a. Architect reserves the right to withhold action on a submittal requiring coordination with other submittals until related submittals are received for example, submittals requiring a color selection to be coordinated with other required color selections.

C. Submittals Schedule: Comply with requirements in Division 01 Section "Construction Progress Documentation" for list of submittals and time requirements for scheduled performance of related construction activities.

D. Processing Time: Allow enough time for submittal review, including time for resubmittals, as follows. Time for review shall commence on Architect's receipt of submittal. No extension of the Contract Time will be authorized because of failure to transmit submittals enough in advance of the Work to permit processing, including resubmittals.

1. Initial Review: Allow fifteen working days for initial review of each submittal. Allow additional time if coordination with subsequent submittals is required. Architect will advise Contractor when a submittal being processed must be delayed for coordination.
2. Intermediate Review: If intermediate submittal is necessary, process it in same manner as initial submittal.
3. Resubmittal Review: Allow fifteen working days for review of each resubmittal.
4. Sequential Review: Where sequential review of submittals by Architect's consultants, Owner, or other parties is indicated, allow twenty-one working days for initial review of each submittal.

E. Identification: Place a permanent label or title block on each submittal for identification.

1. Indicate name of firm or entity that prepared each submittal on label or title block.
2. Provide a space approximately three by four inches on label or beside title block to record Contractor's review and approval markings and action taken by Architect.
3. Include the following information on label for processing and recording action taken:

a. Project name.
b. Date.
c. Name and address of Architect.
d. Name and address of Contractor.
e. Name and address of subcontractor.
f. Name and address of supplier.
g. Name of manufacturer.
h. Submittal number or other unique identifier, including revision identifier.

1) Submittal number shall use Specification Section number followed by a decimal point and then a sequential number (e.g., 061000.01). Resubmittals

shall include an alphabetic suffix after another decimal point (e.g., 061000.01.R1).

i. Other necessary identification.

F. Deviations: Highlight, encircle, or otherwise specifically identify deviations from the Contract Documents on submittals.

G. Additional Copies: Unless additional copies are required for final submittal, and unless Architect observes noncompliance with provisions in the Contract Documents, initial submittal may serve as final submittal.

1. Submit one electronic copy of submittal to allow for concurrent review(s).

H. Transmittal: Package each submittal individually and appropriately for transmittal and handling. Transmit each submittal using a transmittal form. Architect will return submittals, without review**,** received from sources other than Contractor.

1. Transmittal Form: Provide locations on form for the following information:

a. Project name.
b. Date.
c. Destination (To:).
d. Source (From:).
e. Names of subcontractor, manufacturer, and supplier.
f. Specification Section number and title.

I. Resubmittals: Make resubmittals in same form as initial submittal.

1. Note date and content of previous submittal.
2. Note date and content of revision in label or title block and clearly indicate extent of revision.

J. Distribution: Furnish copies of final submittals to manufacturers, subcontractors, suppliers, fabricators, installers, authorities having jurisdiction, and others as necessary for performance of construction activities. Show distribution on transmittal forms.

K. Use for Construction: Use only final submittals with mark indicating "Approved or Furnish as Corrected" taken by Architect.

PART 2 - PRODUCTS

2.1 ACTION SUBMITTALS

A. General: Prepare and submit Action Submittals required by individual Specification Sections.

B. Product Data: Collect information into a single submittal for each element of construction and type of product or equipment.

1. If information must be specially prepared for submittal because standard printed data are not suitable for use, submit as Shop Drawings, not as Product Data.
2. Mark each copy of each submittal to show which products and options are applicable.
3. Include the following information, as applicable:

a. Manufacturer's written recommendations.
b. Manufacturer's product specifications.
c. Manufacturer's installation instructions.
d. Standard color charts.
e. Wiring diagrams showing factory-installed wiring.
f. Printed performance curves.
g. Compliance with specified referenced standards.
h. Testing by recognized testing agency.
i. Notation of coordination requirements.

4. Submit Product Data before or concurrent with Samples.
5. Number of Copies: Submit one electronic PDF copy. If electronic copies are not appropriate, submit a minimum of (4) four hard copies. One hard copy will be returned to the Contractor. Make color copies as needed for supplier's sub-contractors, etc.

C. Shop Drawings: Prepare Project-specific information, drawn accurately to scale. Do not base Shop Drawings on reproductions of the Contract Documents or standard printed data**,** unless submittal of Architect's CAD Drawings are permitted. Use PDF format for electronic shop Drawings.

1. Preparation: Fully illustrate requirements in the Contract Documents. Include the following information, as applicable:

a. Dimensions.
b. Identification of products.
c. Fabrication and installation drawings.
d. Roughing-in and setting diagrams.
e. Wiring diagrams showing field-installed wiring, including power, signal, and control wiring.
f. Templates and patterns.
g. Schedules.
h. Design calculations (if required by specification).
i. Relationship to adjoining construction clearly indicated.
j. Seal and signature of professional engineer if specified.

2. Sheet Size: Except for templates, patterns, and similar full-size drawings, submit Shop Drawings on sheets at least 8-1/2 by 11 inches (215 by 280 mm) but no larger than 30 by 40 inches (750 by 1000 mm).
3. Number of Copies: Submit one electronic PDF copy. If electronic copies are not appropriate, submit a minimum of (4) four hard copies. One hard copy will be returned to the Contractor. Make color copies as needed for supplier's sub-contractors, etc.

D. Samples: Submit Samples for review of kind, color, pattern, and texture for a check of these characteristics with other elements and for a comparison of these characteristics between submittal and actual component as delivered and installed.

1. Transmit Samples that contain multiple, related components such as accessories together in one submittal package.
2. Identification: Attach label on unexposed side of Samples that includes the following:
a. Sample source.
b. Number and title of appropriate Specification Section.

3. Samples for Initial Selection: Submit manufacturer's color charts consisting of units or sections of units showing the full range of colors, textures, and patterns available.

   a. Number of Samples: Submit one full set of available choices where color, pattern, texture, or similar characteristics are required to be selected from manufacturer's product line. Architect will return submittal with options selected.

4. Samples for Verification: Submit full-size units or Samples of size indicated, prepared from same material to be used for the Work, cured and finished in manner specified, and physically identical with material or product proposed for use, and that show full range of color and texture variations expected. Samples include, but are not limited to, the following: partial sections of manufactured or fabricated components; small cuts or containers of materials; complete units of repetitively used materials; swatches showing color, texture, and pattern; color range sets; and components used for independent testing and inspection.

   a. Number of Samples: Submit two sets of Samples. Architect will retain one Sample sets; remainder will be returned.

E. Contractor's Construction Schedule: Comply with requirements specified in Division 01 Section "Construction Progress Documentation" for Construction Manager's action.

F. Submittals Schedule: Comply with requirements specified in Division 01 Section "Construction Progress Documentation."

G. Application for Payment: Comply with requirements specified in Division 01 Section "Payment Procedures."

H. Schedule of Values: Comply with requirements specified in Division 01 Section "Payment Procedures."

I. Subcontract List: Prepare a written summary identifying individuals or firms proposed for each portion of the Work, including those who are to furnish products or equipment fabricated to a special design. Include the following information in tabular form:

   1. Name, address, and telephone number of entity performing subcontract or supplying products.
   2. Number and title of related Specification Section(s) covered by subcontract.

2.2 INFORMATIONAL SUBMITTALS

A. General: Prepare and submit Informational Submittals required by other Specification Sections.

   1. Number of Copies: Submit one electronic PDF copy of each submittal. Architect will not return Informational Submittals.
   2. Test and Inspection Reports: Comply with requirements specified in Division 01 Section "Quality Requirements." Provide one electronic PDF copy. Distribute as indicated or as per Pre-Construction Conference discussion.

B. Coordination Drawings: Comply with requirements specified in Division 01 Section "Project Management and Coordination."

C. Contractor's Construction Schedule: Comply with requirements specified in Division 01 Section "Construction Progress Documentation."

D. Qualification Data: Prepare written information that demonstrates capabilities and experience of firm or person. Include lists of completed projects with project names and addresses, names and addresses of architects and owners, and other information specified.

E. Welding Certificates: Prepare written certification that welding procedures and personnel comply with requirements in the Contract Documents. Submit record of Welding Procedure Specification (WPS) and Procedure Qualification Record (PQR) on AWS forms. Include names of firms and personnel certified.

F. Installer Certificates: Prepare written statements on manufacturer's letterhead certifying that Installer complies with requirements in the Contract Documents and, where required, is authorized by manufacturer for this specific Project.

G. Maintenance Data: Prepare written and graphic instructions and procedures for operation and normal maintenance of products and equipment. Comply with requirements specified in Division 01 Section "Operation and Maintenance Data."

H. Manufacturer's Instructions: Prepare written or published information that documents manufacturer's recommendations, guidelines, and procedures for installing or operating a product or equipment. Include name of product and name, address, and telephone number of manufacturer. Include the following, as applicable:

1. Preparation of substrates.
2. Required substrate tolerances.
3. Sequence of installation or erection.
4. Required installation tolerances.
5. Required adjustments.
6. Recommendations for cleaning and protection.

I. Insurance Certificates and Bonds: Prepare written information indicating current status of insurance or bonding coverage. Include name of entity covered by insurance or bond, limits of coverage, amounts of deductibles, if any, and term of the coverage.

J. Construction Photographs: Comply with requirements specified in Division 01 Section "Photographic Documentation."

2.3 DELEGATED DESIGN

A. Performance and Design Criteria: Where professional design services or certifications by a design professional are specifically required of Contractor by the Contract Documents, provide products and systems complying with specific performance and design criteria indicated.

PART 3 - EXECUTION

3.1 CONTRACTOR'S REVIEW

A. Review each submittal and check for coordination with other Work of the Contract and for compliance with the Contract Documents. Note corrections and field dimensions. Mark with approval stamp before submitting to Architect.

B. Approval Stamp: Stamp each submittal with a uniform, approval stamp. Include Project name and location, submittal number, Specification Section title and number, name of reviewer, date of Contractor's approval, and statement certifying that submittal has been reviewed, checked, and approved for compliance with the Contract Documents.

3.2 ARCHITECT'S / ACTION

A. General: Architect will not review submittals that do not bear Contractor's approval stamp and will return them without action.

B. Action Submittals: Architect will review each submittal, make marks to indicate corrections or modifications required, and return it. Architect will stamp each submittal with an action stamp and will mark stamp appropriately to indicate action taken, as follows:

1. **Approved**; no further action required; **Furnish as Corrected**, Make noted changes/corrections and proceed; **Rejected**, Note any comments and resubmit; **Revise and Resubmit**, Revise per comments and resubmit; **Submit Specified Item**, Revise and resubmit with specified item/manufacturer; **See Attached Comments**, Comments are attached from Architect or others with information for further action or disposition of submittal.

C. Informational Submittals: Architect will review each submittal and will not return it, or will return it if it does not comply with requirements. Architect will forward each submittal to appropriate party.

D. Partial submittals are not acceptable, will be considered nonresponsive, and will be returned without review.

E. Submittals not required by the Contract Documents may not be reviewed and may be discarded.

END OF SECTION 01 33 00

SECTION 01 40 00 - QUALITY REQUIREMENTS

PART 1 - GENERAL

1.1 RELATED DOCUMENTS

A. Drawings and general provisions of the Contract, including General and Supplementary Conditions and other Division 01 Specification Sections, apply to this Section.

1.2 SUMMARY

A. This Section includes administrative and procedural requirements for quality assurance and quality control.

B. Testing and inspecting services are required to verify compliance with requirements specified or indicated. These services do not relieve Contractor of responsibility for compliance with the Contract Document requirements.

1. Specific quality-assurance and -control requirements for individual construction activities are specified in the Sections that specify those activities. Requirements in those Sections may also cover production of standard products.
2. Specified tests, inspections, and related actions do not limit Contractor's other quality-assurance and -control procedures that facilitate compliance with the Contract Document requirements.
3. Requirements for Contractor to provide quality-assurance and -control services required by Architect, Owner, or authorities having jurisdiction are not limited by provisions of this Section.
4. Testing indicated to be provided by the Owner or their designated representative will require the Contractor to provide access, support services required by the specific testing; and the time and cooperation of Contract personnel as may be required for successful test to be carried out.

C. Related Sections include the following:
1. Division 01 Section "Construction Progress Documentation" for developing a schedule of required tests and inspections.
2. Division 01 Section "Cutting and Patching" for repair and restoration of construction disturbed by testing and inspecting activities.
3. Divisions 02 through 49 Sections for specific test and inspection requirements.

1.3 DEFINITIONS

A. Quality-Assurance Services: Activities, actions, and procedures performed before and during execution of the Work to guard against defects and deficiencies and substantiate that proposed construction will comply with requirements.

B. Mockups: Full-size, physical assemblies that are constructed on-site. Mockups are used to verify selections made under sample submittals, to demonstrate aesthetic effects and, where indicated, qualities of materials and execution, and to review construction, coordination, testing, or operation; they are not Samples. Approved mockups establish the standard by which the Work will be judged.

C. Product Testing: Tests and inspections that are performed by an NRTL, an NVLAP, or a testing agency qualified to conduct product testing and acceptable to authorities having jurisdiction, to establish product performance and compliance with industry standards.

D. Field Quality-Control Testing: Tests and inspections that are performed on-site for installation of the Work and for completed Work.

E. Testing Agency: An entity engaged to perform specific tests, inspections, or both. Testing laboratory shall mean the same as testing agency.

1.4 CONFLICTING REQUIREMENTS

A. General: If compliance with two or more standards is specified and the standards establish different or conflicting requirements for minimum quantities or quality levels, comply with the most stringent requirement. Refer uncertainties and requirements that are different, but apparently equal, to Architect for a decision before proceeding.

B. Minimum Quantity or Quality Levels: The quantity or quality level shown or specified shall be the minimum provided or performed. The actual installation may comply exactly with the minimum quantity or quality specified, or it may exceed the minimum within reasonable limits. To comply with these requirements, indicated numeric values are minimum or maximum, as appropriate, for the context of requirements. Refer uncertainties to Architect for a decision before proceeding.

1.5 SUBMITTALS

A. Qualification Data: For testing agencies specified in "Quality Assurance" Article to demonstrate their capabilities and experience. Include proof of qualifications in the form of a recent report on the inspection of the testing agency by a recognized authority.

B. Schedule of Tests and Inspections: Prepare in tabular form and include the following:

1. Specification Section number and title.
2. Description of test and inspection.
3. Identification of applicable standards.
4. Identification of test and inspection methods.
5. Number of tests and inspections required.
6. Time schedule or time span for tests and inspections.
7. Entity responsible for performing tests and inspections.
8. Requirements for obtaining samples.
9. Unique characteristics of each quality-control service.

C. Reports: Prepare and submit certified written reports that include the following:

1. Date of issue.
2. Project title and number.
3. Name, address, and telephone number of testing agency.
4. Dates and locations of samples and tests or inspections.
5. Names of individuals making tests and inspections.
6. Description of the Work and test and inspection method.
7. Identification of product and Specification Section.
8. Complete test or inspection data.

9. Test and inspection results and an interpretation of test results.
10. Record of temperature and weather conditions at time of sample taking and testing and inspecting.
11. Recommendations on retesting and re-inspecting.

D. Permits, Licenses, and Certificates: For Owner's records, submit copies of permits, licenses, certifications, inspection reports, releases, jurisdictional settlements, notices, receipts for fee payments, judgments, correspondence, records, and similar documents, established for compliance with standards and regulations bearing on performance of the Work.

1.6 QUALITY ASSURANCE

A. General: Qualifications paragraphs in this Article establish the minimum qualification levels required; individual Specification Sections specify additional requirements.

B. Installer Qualifications: A firm or individual experienced in installing, erecting, or assembling work similar in material, design, and extent to that indicated for this Project, whose work has resulted in construction with a record of successful in-service performance.

C. Manufacturer Qualifications: A firm experienced in manufacturing products or systems similar to those indicated for this Project and with a record of successful in-service performance, as well as sufficient production capacity to produce required units.

D. Fabricator Qualifications: A firm experienced in producing products similar to those indicated for this Project and with a record of successful in-service performance, as well as sufficient production capacity to produce required units.

E. Professional Engineer Qualifications: A professional engineer who is legally qualified to practice in jurisdiction where Project is located and who is experienced in providing engineering services of the kind indicated. Engineering services are defined as those performed for installations of the system, assembly, or products that are similar to those indicated for this Project in material, design, and extent.

F. Testing Agency Qualifications: An NRTL, an NVLAP, or an independent agency with the experience and capability to conduct testing and inspecting indicated, as documented according to ASTM E 548; and with additional qualifications specified in individual Sections; and where required by authorities having jurisdiction, that is acceptable to authorities.

1. NRTL: A nationally recognized testing laboratory according to 29 CFR 1910.7.
2. NVLAP: A testing agency accredited according to NIST's National Voluntary Laboratory Accreditation Program.

G. Factory-Authorized Service Representative Qualifications: An authorized representative of manufacturer who is trained and approved by manufacturer to inspect installation of manufacturer's products that are similar in material, design, and extent to those indicated for this Project.

H. Mockups: Before installing portions of the Work requiring mockups, build mockups for each form of construction and finish required to comply with the following requirements, using materials indicated for the completed Work:

1. Build mockups in location and of size indicated or, if not indicated, as directed by Architect.
2. Notify Architect seven days in advance of dates and times when mockups will be constructed.
3. Demonstrate the proposed range of aesthetic effects and workmanship.
4. Obtain Architect's approval of mockups before starting work, fabrication, or construction.
   a. Allow seven days for initial review and each re-review of each mockup.
5. Maintain mockups during construction in an undisturbed condition as a standard for judging the completed Work.
6. Demolish and remove mockups when directed, unless otherwise indicated.

1.7 QUALITY CONTROL

A. Owner Responsibilities: Where quality-control services are indicated as Owner's responsibility, Owner will engage a qualified testing agency to perform these services.

1. Owner will provide all required IBC Special Inspections for the following:
   a. Earthwork for Building Elements. Per IBC Chapter 17.
      1) Site Preparation Building – Field Testing & Inspect
      2) Fill Placement Building – Review Submittals, Field Testing and Inspection
      3) Fill Compaction Building – In Place Density Test
      4) Foundation Sub-Grade, Field Inspection of foundation sub-grade prior to concrete placement.
   b. Concrete for Building Foundations and Slabs. Per IBC Chapter 19
      1) Materials – Products supplied vs. Certificates of compliance & Mix Design
      2) Reinforcing Steel – Field Inspection of placement.
      3) Concrete Strength – Evaluation of concrete strength
   c. Structural Steel. Per IBC Chapter 17
      1) Bolts. Nuts, Washers – Review Certificates of Compliance
      2) Structural Steel – Review Certificates of Compliance
      3) Bolts, Nuts, Washers – Inspection of in-place high strength bolts
      4) Structural Details – Inspection of Structural Details
   d. Site Asphaltic and Concrete Paving and Sub-grade Preparation Testing per the Geotechnical Report and Asphaltic and Concrete Paving specifications. **Testing related to the Parking Lot and Vehicle Shelter slab must be have each Test Step completed before the work can proceed to the next step.**
2. Costs for retesting and re-inspecting construction that replaces or is necessitated by work that failed to comply with the Contract Documents will be charged to Contractor, and the Contract Sum will be adjusted by Change Order.

B. Tests and inspections not explicitly assigned to Owner are Contractor's responsibility. Unless otherwise indicated, provide quality-control services specified and those required by authorities having jurisdiction. Perform quality-control services required of Contractor by authorities having jurisdiction, whether specified or not.

1. Where services are indicated as Contractor's responsibility, engage a qualified testing agency to perform these quality-control services.
   a. Contractor shall not employ same entity engaged by Owner, unless agreed to in writing by Owner.
2. Where quality-control services are indicated as Contractor's responsibility, submit a certified written report, in duplicate, of each quality-control service.

3. Testing and inspecting requested by Contractor and not required by the Contract Documents are Contractor's responsibility.

C. Manufacturer's Field Services: Where indicated, engage a factory-authorized service representative to inspect field-assembled components and equipment installation, including service connections. Report results in writing as specified in Division 01 Section "Submittal Procedures."

D. Retesting/Re-inspecting: Regardless of whether original tests or inspections were Contractor's responsibility, provide quality-control services, including retesting and re-inspecting, for construction that replaced Work that failed to comply with the Contract Documents.

E. Associated Services: Cooperate with agencies performing required tests, inspections, and similar quality-control services, and provide reasonable auxiliary services as requested. Notify agency sufficiently in advance of operations to permit assignment of personnel. Provide the following:

1. Access to the Work.
2. Incidental labor and facilities necessary to facilitate tests and inspections.
3. Adequate quantities of representative samples of materials that require testing and inspecting. Assist agency in obtaining samples.
4. Facilities for storage and field curing of test samples.
5. Delivery of samples to testing agencies.
6. Preliminary design mix proposed for use for material mixes that require control by testing agency.
7. Security and protection for samples and for testing and inspecting equipment at Project site.

F. Coordination: Coordinate sequence of activities to accommodate required quality-assurance and -control services with a minimum of delay and to avoid necessity of removing and replacing construction to accommodate testing and inspecting.

1. Schedule times for tests, inspections, obtaining samples, and similar activities.

PART 2 - PRODUCTS (Not Used)

PART 3 - EXECUTION

3.1 REPAIR AND PROTECTION

A. General: On completion of testing, inspecting, sample taking, and similar services, repair damaged construction and restore substrates and finishes.

1. Provide materials and comply with installation requirements specified in other Specification Sections. Restore patched areas and extend restoration into adjoining areas with durable seams that are as invisible as possible.
2. Comply with the Contract Document requirements for Division 01 Section "Cutting and Patching."

B. Protect construction exposed by or for quality-control service activities.

C. Repair and protection are Contractor's responsibility, regardless of the assignment of responsibility for quality-control services.

END OF SECTION 01 40 00

SECTION 01 50 00 - TEMPORARY FACILITIES AND CONTROLS

PART 1 - GENERAL

1.1 RELATED DOCUMENTS

A. Drawings and general provisions of the Contract, including General and Supplementary Conditions and other Division 01 Specification Sections, apply to this Section.

1.2 SUMMARY

A. This Section includes requirements for temporary utilities, support facilities, security and protection facilities, including dust control and requirements for the provision of remote parking and transportation to and from the site.

B. Related Sections include the following:

1. Division 01 Section "Summary" for limitations on utility interruptions and other work restrictions.
2. Division 01 Section "Execution" for progress cleaning requirements.
3. Divisions 02 through 49 Sections for temporary heat, ventilation, and humidity requirements for products in those Sections.

1.3 USE CHARGES

A. General: Cost or use charges for temporary facilities shall be included in the Contract Sum.

1. Where Owner Utilities are available they may be used. Water and electrical utilities are available. All temporary connections are to be approved by Santa Fe County Public Works Department and restored to the original condition at the completion of the work.

1.4 QUALITY ASSURANCE

A. Electric Service: Comply with NECA, NEMA, and UL standards and regulations for temporary electric service. Install service to comply with NFPA 70.

B. Tests and Inspections: Arrange for authorities having jurisdiction to test and inspect each temporary utility before use. Obtain required certifications and permits.

1.5 PROJECT CONDITIONS

A. Temporary Use of Permanent Facilities: Installer of each permanent service shall assume responsibility for operation, maintenance, and protection of each permanent service during its use as a construction facility before Owner's acceptance, regardless of previously assigned responsibilities.

PART 2 - PRODUCTS

2.1 MATERIALS

A. Portable Chain-Link Fencing: Minimum 2-inch (50-mm) galvanized steel, chain-link fabric fencing; minimum 6 feet (1.8 m) high with galvanized steel pipe posts.

2.2 EQUIPMENT

A. Fire Extinguishers: Portable, UL rated; with class and extinguishing agent as required by locations and classes of fire exposures.

B. HVAC Equipment: Unless Owner authorizes use of permanent HVAC system, provide vented, self-contained, liquid-propane-gas or fuel-oil heaters with individual space thermostatic control.

C. Waste and Recycling Containers: As required.

2.3 Project Identification Sign: Contractor's Project Identification Sign size and location to be coordinated with Owner Representative.

2.4 CONTRACTOR PARKING: Due to limited parking, Contractor parking will be limited to an area designated by Santa Fe County Public Works Department.

PART 3 - EXECUTION

3.1 INSTALLATION, GENERAL

A. Locate facilities where they will serve Project adequately and result in minimum interference with performance of the Work. Relocate and modify facilities as required by progress of the Work.

3.2 TEMPORARY UTILITY INSTALLATION

A. General: Install temporary service or connect to existing service.

1. Arrange with utility company, and Owner, for time when service can be interrupted, if necessary, to make connections for temporary services.

B. Water Service: Use of Owner's water service facilities will be permitted, as long as facilities are cleaned and maintained in a condition acceptable to Owner. At Substantial Completion, restore these facilities to condition existing before initial use.

C. Sanitary Facilities: Provide temporary toilets, wash facilities, and drinking water for use of construction personnel. Comply with authorities having jurisdiction for type, number, location, operation, and maintenance of fixtures and facilities.

D. Heating: Provide temporary heating required by construction activities for curing or drying of completed installations or for protecting installed construction from adverse effects of low temperatures or high humidity.

E. Electric Power Service: Use of Owner's electric power service will be permitted, as long as equipment is maintained in a condition acceptable to Owner.

F. Lighting: Provide temporary lighting with local switching that provides adequate illumination for construction operations, observations, inspections, and traffic conditions.

G. Telephone Service: Provide temporary telephone service in common-use facilities for use by all construction personnel.

1. Provide superintendent with cellular telephone for use when away from field office.

H. Electronic Communication Service: Provide temporary electronic communication service, including electronic mail, in common-use facilities.

3.3 SUPPORT FACILITIES INSTALLATION

A. General: Comply with the following:

1. Provide incombustible construction for offices, shops, and sheds located within construction area or within 30 feet (9 m) of building lines. Comply with NFPA 241.
2. Maintain support facilities until near Substantial Completion. Remove before Substantial Completion. Personnel remaining after Substantial Completion will be permitted to use permanent facilities, under conditions acceptable to Owner.

B. Project Identification and Temporary Signs: Provide Project identification and other signs. Install signs where indicated to inform public and individuals seeking entrance to Project. Unauthorized signs are not permitted.

1. Provide Project Identification Sign: 4 feet x 8 feet, wood frame, exterior grade plywood construction. Sign shall be painted be professional sign painter. Exhibit lettering to Architect's design and colors. Sign shall list title of Project, contact at Owner, Architect, and Contractor.
2. Erect on site at location established by the Owner.

C. Waste Disposal Facilities: Provide waste-collection containers in sizes adequate to handle waste from construction operations. Comply with requirements of authorities having jurisdiction. Comply with Division 01 Section "Execution" for progress cleaning requirements.

3.4 SECURITY AND PROTECTION FACILITIES INSTALLATION

A. Environmental Protection: Provide protection, operate temporary facilities, and conduct construction in ways and by methods that comply with environmental regulations and that minimize possible air, waterway, and subsoil contamination or pollution or other undesirable effects.

B. Pest Control: Engage pest-control service to recommend practices to minimize attraction and harboring of rodents, roaches, and other pests and to perform extermination and control procedures at regular intervals so Project will be free of pests and their residues at Substantial Completion.

C. Site Enclosure Fence: Before construction operations begin, furnish and install site enclosure fence in a manner that will prevent people and animals from easily entering site except by entrance gates.

1. Extent of Fence: As indicated on the drawings and to be coordinated with Santa Fe County Public Works Department.

D. Barricades, Warning Signs, and Lights: Comply with requirements of authorities having jurisdiction for erecting structurally adequate barricades, including warning signs and lighting.

E. Temporary Fire Protection: Install and maintain temporary fire-protection facilities of types needed to protect against reasonably predictable and controllable fire losses. Comply with NFPA 241.

3.5 UTILITIES, WATER SECTION POLICIES AND REQUIREMENTS

A. Temporary domestic water service to construction sites: In order to protect the health of the domestic water system, the utility provider must be contacted and authorization must be given prior to any connection being made to the domestic water system

B. Fire Hydrants Connections:
   1. Requirements for temporary services attached to a fire hydrant.
      a. Equipment Requirements:
      b. Backflow prevention Device: A reduced pressure backflow unit is the only authorized backflow prevention device.
      c. An isolating gate valve attached to the backflow prevention device.
   2. Policy Procedures:
      a. A short, hands-on training on how to properly operate a fire hydrant.
      b. This training has to be set up with utility provider personnel.

C. Any other direct connection to Santa Fe County Public Works Department distribution system: The minimum equipment requirement is as follows:
   1. Equipment requirements:
   2. Backflow prevention device: A reduced pressure backflow unit is the only authorized backflow prevention device.
   3. An isolating gate valve attached to the backflow prevention device.

END OF SECTION 01 50 00

SECTION 01 60 00 – PRODUCT REQUIREMENTS

PART 1 - GENERAL

1.1 DESCRIPTION: Material and equipment incorporated into the Work shall conform to applicable specifications and standards, and shall comply with size, make, type, and quality specified, or as specifically approved in writing by Architect.

A. Manufactured and Fabricated Products

1. Design, fabricate, and assemble in accord with the best engineering and shop practices.
2. Manufacture like parts of duplicate units to standard sizes and gauges, to be interchangeable.
3. Two or more items of the same kind shall be identical, by the same manufacturer.
4. Products shall be suitable for service condition.
5. Equipment capacities, sizes, and dimensions shown or specified shall be adhered to unless variations are specifically approved in writing.

B. Do not use material or equipment for any purpose other than that for which it is designed or is specified.

C. It is the intention of the Section to provide the requirements to be met by all fasteners and anchoring devices which are generally exposed to view.

1. Items which are permanently installed and which will not require adjustment shall be anchored with one way screws. If both faces of the items are exposed the fastener shall be a sex bolt with one-way heads. Machine bolts and nuts may be used only if the threads are upset or the head of the bolt is welded to the item.
2. Items which are required to be removed periodically shall have anchoring devices with spanner heads or hexagonal socket heads.
3. Phillips head screws shall be used only for the anchoring of finish hardware such as butts, locksets, etc. No slotted head screws shall be used in any exposed fastening.
4. The requirements of this section of the specifications apply to fasteners & anchoring devices of electrical and mechanical items which are exposed to view in public spaces.

1.2 MANUFACTURER'S INSTRUCTIONS

A. When Contract Documents require that installation of work shall comply with manufacturer's printed instructions, obtain and distribute copies of such instructions to parties involved in the installation, including two copies to the Architect.

1. Maintain one set of complete instructions at the job site during installation and until completion. At the completion of the work, incorporate the instructions into the Operations and Maintenance manual.

B. Handle, install, connect, clean, condition, and adjust products in strict accordance with such instructions and in conformity with specified requirements.

1. Should job conditions or specified requirements conflict with manufacturer's instructions, consult with Architect for further instructions.

2. Do not proceed with work without clear instruction.

C. Perform work in accordance with manufacturer's instructions. Do not omit any preparatory step or installation procedure unless specifically modified or exempted by Contract Documents.

1.3 TRANSPORTATION AND HANDLING

A. Arrange deliveries of products in accordance with construction schedules, coordinate to avoid conflict with work and conditions at the site.

1. Deliver products in undamaged condition, in manufacturer's original containers or packaging, with identifying labels intact and legible.

2. Immediately on delivery, inspect shipments to assure compliance with requirements of Contract Documents and approved submittals and that products are properly protected and undamaged.

B. Provide equipment and personnel to handle products by methods to prevent soiling or damage to products or packaging.

1.4 STORAGE AND PROTECTION

A. Store products in accordance with manufacturer's instructions, with seals and labels intact and legible. Maintain temperature and humidity within the ranges required by manufacturer's instructions. Arrange storage in a manner to provide easy access for inspection and make periodic inspections of store products to assure that products are maintained under specified conditions, and free from damage or deterioration.

B. Protection After Installation: Provide substantial coverings as necessary to protect installed products from damage from traffic and subsequent construction operations. Remove when no longer needed.

PART 2 - PRODUCTS

Not used.

PART 3 - EXECUTION

Not used.

END OF SECTION

SECTION 01 63 00 - SUBSTITUTIONS AND PRODUCT OPTIONS

PART 1 - GENERAL

1.1 PRODUCT OPTIONS:

A. Substitutions: No substitutions will be considered unless a written request for approval has been submitted in accordance with the requirements as stated in the Instructions to Bidders, approved by Addendum.

1. Form for written request is attached to this section and may be copied.

B. Products List: Within 30 days after Contract Date, submit to Architect a complete list of major products proposed to be used, with the name of the manufacturer and the installing subcontractor.

C. Contractor's Options:

1. For products specified only by reference standard, select any product meeting that standard.

2. For products specified by naming several products or manufacturers, select any one of the products or manufacturers named which complies with the specifications.

3. For products specified by naming one or more products or manufacturers and "or equal" "approved equal" or "prior approved equal". Contractor must submit a written request for any product or manufacturer not specifically named in accordance with Instructions to Bidders.

PART 2 - PRODUCTS

Not used.

PART 3 - EXECUTION

Not used.

SUBSTITUTION REQUEST FORM

TO:_____

PROJECT:_____SF COUNTY PUBLIC WORKS DEPT. PROPERTY CONTROL FACILITY_

We hereby submit for your consideration the following product instead of the specified item for the above project:

Section Page Paragraph/Line Specified Item

_____ ____ _____ _____

Proposed Substitution: _____

_____

Attach complete product description, samples, photographs, performance and text data, warranty information, and other information necessary for evaluation. Identify specific model numbers, finishes, options, etc.

A. Will changes be required to building design in order to properly install proposed substitution?
Yes_____ No_____ If Yes, explain

_____

_____

B. Will the undersigned pay for changes to the building design, including engineering and drawings costs, caused by requested substitution?

Yes_____ No_____

C. List the differences between proposed substitution and specified item.

Specified Item Proposed Substitution

_____ _____

_____ _____

D. Does substitution affect Drawing dimensions?

Yes_____ No_____

E. What affect does substitution have on other trades?

_____

F. Does manufacturer's warrantee of the proposed substitution differ from that specified?

Yes_____ No_____ If Yes, explain_____

_____

G. Will substitution effect progress schedule?

Yes_____ No_____ If Yes, explain_____

_____

H. Will substitution require more license fees or royalties than specified product?

Yes_____ No_____ If Yes, explain_____

_____

I. Will maintenance and service parts be locally available for substitution?

Yes_____ No_____ If Yes, identify City name and
State_____ If No, explain

J. Will change in product effect outcome of LEED points?

Yes_____ No_____ If Yes, explain_____

_____

Submitted by:

_____
Signature

_____
Firm

_____
Address

For Architect's Use Only:
___Submit Specified Item
___No Exceptions Taken
___Note Markings
___Revise and Resubmit
___Received Too Late
___Rejected
___Comments Attached

By: _____ Date: _____

Date _____ Remarks:_____

Telephone_____ Fax_____

END OF SECTION

SECTION 01 73 00 - EXECUTION

PART 1 - GENERAL

1.1 RELATED DOCUMENTS

A. Drawings and general provisions of the Contract, including General and Supplementary Conditions and other Division 01 Specification Sections, apply to this Section.

1.2 SUMMARY

A. This Section includes general procedural requirements governing execution of the Work including, but not limited to, the following:

1. Construction layout.
2. Field engineering and surveying.
3. General installation of products.
4. Progress cleaning.
5. Starting and adjusting.
6. Protection of installed construction.
7. Correction of the Work.

B. Related Sections include the following:

1. Division 01 Section "Project Management and Coordination" for procedures for coordinating field engineering with other construction activities.
2. Division 01 Section "Submittal Procedures" for submitting surveys.
3. Division 01 Section "Cutting and Patching" for procedural requirements for cutting and patching necessary for the installation or performance of other components of the Work.
4. Division 01 Section "Closeout Procedures" for submitting final property survey with Project Record Documents, recording of Owner-accepted deviations from indicated lines and levels, and final cleaning.

1.3 SUBMITTALS

A. Qualification Data: For land surveyor.

B. Certificates: Submit certificate signed by land surveyor certifying that location and elevation of improvements comply with requirements.

1. Provide survey documentation as required for all final approvals of authorities having jurisdiction.

1.4 QUALITY ASSURANCE

A. Land Surveyor Qualifications: A professional land surveyor who is legally qualified to practice in jurisdiction where Project is located and who is experienced in providing land-surveying services of the kind indicated.

PART 2 - PRODUCTS (Not Used)

PART 3 - EXECUTION

3.1 EXAMINATION

A. Existing Conditions: The existence and location of site improvements, utilities, and other construction indicated as existing are not guaranteed. Before beginning work, investigate and verify the existence and location of mechanical and electrical systems and other construction affecting the Work.

1. Before construction, verify the location and points of connection of utility services.

B. Existing Utilities: The existence and location of underground and other utilities and construction indicated as existing are not guaranteed. Before beginning sitework, investigate and verify the existence and location of underground utilities and other construction affecting the Work.

1. Before construction, verify the location and invert elevation at points of connection of sanitary sewer, and water-service piping; and underground electrical services.

C. Acceptance of Conditions: Examine substrates, areas, and conditions, with Installer or Applicator present where indicated, for compliance with requirements for installation tolerances and other conditions affecting performance. Record observations.

1. Proceed with installation only after unsatisfactory conditions have been corrected. Proceeding with the Work indicates acceptance of surfaces and conditions.

3.2 PREPARATION

A. Field Measurements: Take field measurements as required to fit the Work properly. Recheck measurements before installing each product. Where portions of the Work are indicated to fit to other construction, verify dimensions of other construction by field measurements before fabrication. Coordinate fabrication schedule with construction progress to avoid delaying the Work.

3.3 CONSTRUCTION LAYOUT

A. Verification: Before proceeding to lay out the Work, verify layout information shown on Drawings, in relation to the property survey and existing benchmarks. If discrepancies are discovered, notify Architect promptly.

B. General: Engage a land surveyor to lay out the Work using accepted surveying practices.

1. Establish benchmarks and control points to set lines and levels at each story of construction and elsewhere as needed to locate each element of Project.
2. Establish dimensions within tolerances indicated. Do not scale Drawings to obtain required dimensions.

C. Site Improvements: Locate and lay out site improvements, including pavements, grading, fill and topsoil placement, utility slopes, and invert elevations.

3.4 FIELD ENGINEERING

A. Identification: Owner will identify existing benchmarks, control points.

B. Reference Points: Locate existing permanent benchmarks, control points, and similar reference points before beginning the Work. Preserve and protect permanent benchmarks and control points during construction operations.

3.5 INSTALLATION

A. General: Locate the Work and components of the Work accurately, in correct alignment and elevation, as indicated.

1. Make vertical work plumb and make horizontal work level.
2. Where space is limited, install components to maximize space available for maintenance and ease of removal for replacement.

3. Conceal pipes, ducts, and wiring in finished areas, unless otherwise indicated.

B. Anchors and Fasteners: Provide anchors and fasteners as required to anchor each component securely in place, accurately located and aligned with other portions of the Work.

1. Mounting Heights: Where mounting heights are not indicated, mount components at heights directed by Architect.

3.6 PROGRESS CLEANING

A. General: Clean Project site and work areas daily, including common areas. Coordinate progress cleaning for joint-use areas where more than one installer has worked. Enforce requirements strictly. **Do not let dust migrate from the work area.** Dispose of materials lawfully.

B. Site: Maintain Project site free of waste materials and debris.

C. Work Areas: Clean areas where work is in progress to the level of cleanliness necessary for proper execution of the Work.

1. Where dust would impair proper execution of the Work, broom-clean or vacuum the entire work area, as appropriate.

D. Installed Work: Keep installed work clean. Clean installed surfaces according to written instructions of manufacturer or fabricator of product installed, using only cleaning materials specifically recommended.

E. Waste Disposal: Burying or burning waste materials on-site will not be permitted.

3.7 STARTING AND ADJUSTING

A. Test each piece of equipment to verify proper operation. Test and adjust controls and safeties. Replace damaged and malfunctioning controls and equipment.

Manufacturer's Field Service: If a factory-authorized service representative is required to inspect field-assembled components and equipment installation, comply with qualification requirements in Division 01 Section "Quality Requirements."

3.8 PROTECTION OF INSTALLED CONSTRUCTION

A. Provide final protection and maintain conditions that ensure installed Work is without damage or deterioration at time of Substantial Completion.

3.9 CORRECTION OF THE WORK

A. Repair or remove and replace defective construction. Restore damaged substrates and finishes. Comply with requirements in Division 01 Section "Cutting and Patching."

1. Repairing includes replacing defective parts, refinishing damaged surfaces, touching up with matching materials, and properly adjusting operating equipment.

END OF SECTION 01 73 00

SECTION 01 73 29 - CUTTING AND PATCHING

PART 1 - GENERAL

1.1 RELATED DOCUMENTS

A. Drawings and general provisions of the Contract, including General and Supplementary Conditions and other Division 01 Specification Sections, apply to this Section.

1.2 SUMMARY

A. This Section includes procedural requirements for cutting and patching.

B. Related Sections include the following:
   1. Divisions 02 through 49 Sections for specific requirements and limitations applicable to cutting and patching individual parts of the Work.

1.3 DEFINITIONS

A. Cutting: Removal of in-place construction necessary to permit installation or performance of other Work.

B. Patching: Fitting and repair work required to restore surfaces to original conditions after installation of other Work.

1.4 SUBMITTALS

A. Cutting and Patching Proposal: Submit a proposal describing procedures at least 10 days before the time cutting and patching will be performed, requesting approval to proceed. Include the following information:

   1. Extent: Describe cutting and patching, show how they will be performed, and indicate why they cannot be avoided.
   2. Structural Elements: Where cutting and patching involve adding reinforcement to structural elements, submit details and engineering calculations showing integration of reinforcement with original structure.

1.5 QUALITY ASSURANCE

A. Structural Elements: Do not cut and patch structural elements in a manner that could change their load-carrying capacity or load-deflection ratio.
   1. Operational Elements: Do not cut and patch operating elements and related components in a manner that results in reducing their capacity to perform as intended or that results in increased maintenance or decreased operational life or safety.

B. Visual Requirements: Do not cut and patch construction in a manner that results in visual evidence of cutting and patching. Do not cut and patch construction exposed on the exterior or in occupied spaces in a manner that would, in Architect's opinion, reduce the building's aesthetic qualities. Remove and replace construction that has been cut and patched in a visually unsatisfactory manner.

PART 2 - PRODUCTS

2.1 MATERIALS

A. General: Comply with requirements specified in other Sections.

B. In-Place Materials: Use materials identical to in-place materials. For exposed surfaces, use materials that visually match in-place adjacent surfaces to the fullest extent possible.

PART 3 - EXECUTION

3.1 EXAMINATION

A. Examine surfaces to be cut and patched and conditions under which cutting and patching are to be performed.

1. Compatibility: Before patching, verify compatibility with and suitability of substrates, including compatibility with in-place finishes or primers.

3.2 PREPARATION

A. Temporary Support: Provide temporary support of Work to be cut.

B. Protection: Protect in-place construction during cutting and patching to prevent damage. Provide protection from adverse weather conditions for portions of Project that might be exposed during cutting and patching operations.

3.3 PERFORMANCE

A. Cutting: Cut in-place construction by sawing, drilling, breaking, chipping, grinding, and similar operations, including excavation, using methods least likely to damage elements retained or adjoining construction. If possible, review proposed procedures with original Installer; comply with original Installer's written recommendations.

B. Patching: Patch construction by filling, repairing, refinishing, closing up, and similar operations following performance of other Work. Patch with durable seams that are as invisible as possible. Provide materials and comply with installation requirements specified in other Sections.

END OF SECTION 01 73 29

SECTION 01 74 19 - CONSTRUCTION WASTE MANAGEMENT AND DISPOSAL

PART 1 - GENERAL

1.1 RELATED DOCUMENTS

A. Drawings and general provisions of the Contract, including General and Supplementary Conditions and Division 01 Specification Sections, apply to this Section.

1.2 SUMMARY

A. This Section includes administrative and procedural requirements for the following:
   1. Salvaging nonhazardous demolition and construction waste.
   2. Recycling nonhazardous demolition and construction waste.
   3. Disposing of nonhazardous demolition and construction waste.

B. Related Sections include the following:
   1. Division 01 Section “Close Out Procedures”
      Division 01 Section "Temporary Facilities and Controls" for environmental-protection measures during construction, and location of waste containers at Project site.

1.3 DEFINITIONS

A. Construction Waste: Building and site improvement materials and other solid waste resulting from construction, remodeling, renovation, or repair operations. Construction waste includes packaging.

B. Demolition Waste: Building and site improvement materials resulting from demolition or selective demolition operations.

C. Disposal: Removal off-site of demolition and construction waste and subsequent sale, recycling, reuse, or deposit in landfill or incinerator acceptable to authorities having jurisdiction.

D. Recycle: Recovery of demolition or construction waste for subsequent processing in preparation for reuse.

E. Salvage: Recovery of demolition or construction waste and subsequent sale or reuse in another facility.

F. Salvage and Reuse: Recovery of demolition or construction waste and subsequent incorporation into the Work.

1.4 PERFORMANCE REQUIREMENTS

A. Salvage/Recycle Requirements: Owner's goal is to salvage and recycle as much nonhazardous demolition and construction waste as possible including the following materials:

   1. Demolition Waste:
      a. Concrete.

b. Concrete reinforcing steel.
c. Concrete masonry units.
d. Structural and miscellaneous steel.
e. Equipment.
f. Piping.
g. Supports and hangers.
h. Valves.
i. Mechanical equipment.
j. Refrigerants.
k. Electrical conduit.
l. Copper wiring.
m. Lighting fixtures.
n. Lamps.
o. Ballasts.
p. Electrical devices.
q. Switchgear and panelboards.
r. Transformers.

2. Construction Waste:

a. Site-clearing waste.
b. Lumber.
c. Wood sheet materials.
d. Wood trim.
e. Metals.
f. Roofing.
g. Insulation.
h. Gypsum board.
i. Piping.
j. Electrical conduit.
k. Packaging: Regardless of salvage/recycle goal indicated above, salvage or recycle 100 percent of the following uncontaminated packaging materials:

1) Paper.
2) Cardboard.
3) Boxes.
4) Plastic sheet and film.
5) Polystyrene packaging.
6) Wood crates.
7) Plastic pails.

1.5 SUBMITTALS

A. Records of Sales: Indicate receipt and acceptance of salvageable waste sold to individuals and organizations. Indicate whether organization is tax exempt.

B. Recycling and Processing Facility Records: Indicate receipt and acceptance of recyclable waste by recycling and processing facilities licensed to accept them. Include manifests, weight tickets, receipts, and invoices.

C. Landfill and Incinerator Disposal Records: Indicate receipt and acceptance of waste by landfills and incinerator facilities licensed to accept them. Include manifests, weight tickets, receipts, and invoices.

1.6 QUALITY ASSURANCE

A. Regulatory Requirements: Comply with hauling and disposal regulations of authorities having jurisdiction.

PART 2 - PRODUCTS (Not Used)

PART 3 - EXECUTION

3.1 PLAN IMPLEMENTATION

A. General: Implement waste management plan as approved by Architect. Provide handling, containers, storage, signage, transportation, and other items as required to implement waste management plan during the entire duration of the Contract.

1. Comply with Division 01 Section "Temporary Facilities and Controls" for operation, termination, and removal requirements.

B. Site Access and Temporary Controls: Conduct waste management operations to ensure minimum interference with roads, streets, walks, walkways, and other adjacent occupied and used facilities.

1. Designate and label specific areas on Project site necessary for separating materials that are to be salvaged, recycled, reused, donated, and sold.
2. Comply with Division 01 Section "Temporary Facilities and Controls" for controlling dust and dirt, environmental protection, and noise control.

3.2 SALVAGING DEMOLITION WASTE

A. Salvaged Items for Sale and Donation: Not permitted on Project site.

B. Salvaged Items for Owner's Use:

1. Clean salvaged items.
2. Store items in a secure area until delivery to Owner.
3. Transport items to Owner's storage area designated by Owner.
4. Protect items from damage during transport and storage.

3.3 RECYCLING DEMOLITION AND CONSTRUCTION WASTE, GENERAL

A. Recycling Receivers and Processors: List below is provided for information only; available recycling receivers and processors include, but are not limited to, the following:

1. Waste Management, 505-975-5354.

2. Master Fiber Inc., 505-345-6413.

3. Acme Iron & Metal Company, 505-345-2457.

4. NM Recycling Resource Guide, www.recyclenewmexico.com or 505-983-4470.

B. **Recycling Incentives: Revenues, savings, rebates, tax credits, and other incentives received for recycling waste materials shall accrue to Contractor.**

C. Procedures: Separate recyclable waste from other waste materials, trash, and debris. Separate recyclable waste by type at Project site to the maximum extent practical.

1. Provide appropriately marked containers or bins for controlling recyclable waste until they are removed from Project site. Include list of acceptable and unacceptable materials at each container and bin.

   a. Inspect containers and bins for contamination and remove contaminated materials if found.

2. Stockpile processed materials on-site without intermixing with other materials. Place, grade, and shape stockpiles to drain surface water. Cover to prevent windblown dust.
3. Stockpile materials away from construction area. Do not store within drip line of remaining trees.
4. Store components off the ground and protect from the weather.
5. Remove recyclable waste off Owner's property and transport to recycling receiver or processor.

3.4 RECYCLING DEMOLITION/CONSTRUCTION WASTE

A. Concrete: Remove reinforcement and other metals from concrete and sort with other metals.

1. Pulverize concrete to maximum 4-inch size.

B. Wood Materials: Sort and stack members according to size, type, and length. Separate lumber, engineered wood products, panel products, painted wood, and treated wood materials.

C. Metals: Separate metals by type.

1. Structural Steel: Stack members according to size, type of member, and length.
2. Remove and dispose of bolts, nuts, washers, and other rough hardware.

D. Piping: Reduce piping to straight lengths and store by type and size. Separate supports, hangers, valves, sprinklers, and other components by type and size.

E. Lighting Fixtures: Separate lamps by type and protect from breakage. Dispose of at approved disposal/recycle provider.

F. Electrical Devices: Separate switches, receptacles, switchgear, transformers, meters, panelboards, circuit breakers, and other devices by type.

G. Conduit: Reduce conduit to straight lengths and store by type and size.

3.5 RECYCLING CONSTRUCTION WASTE

A. Packaging:

1. Cardboard and Boxes: Break down packaging into flat sheets. Bundle and store in a dry location.
2. Polystyrene Packaging: Separate and bag materials.
3. Pallets: As much as possible, require deliveries using pallets to remove pallets from Project site. For pallets that remain on-site, break down pallets into component wood pieces and comply with requirements for recycling wood.
4. Crates: Break down crates into component wood pieces and comply with requirements for recycling wood.

3.6 DISPOSAL OF WASTE

A. General: Except for items or materials to be salvaged, recycled, or otherwise reused, remove waste materials from Project site and legally dispose of them in a landfill or incinerator acceptable to authorities having jurisdiction.

1. Except as otherwise specified, do not allow waste materials that are to be disposed of accumulate on-site.
2. Remove and transport debris in a manner that will prevent spillage on adjacent surfaces and areas.

B. Burning: Do not burn waste materials.

C. Disposal: Transport waste materials off Owner's property and legally dispose of them.

END OF SECTION 01 74 19

SECTION 01 77 00 - CLOSEOUT PROCEDURES

PART 1 - GENERAL

1.1 RELATED DOCUMENTS

A. Drawings and general provisions of the Contract, including General and Supplementary Conditions and other Division 01 Specification Sections, apply to this Section.

1.2 SUMMARY

A. This Section includes administrative and procedural requirements for contract closeout, including, but not limited to, the following:

1. Inspection procedures.
2. Warranties.
3. Final cleaning.

B. Related Sections include the following:

1. Division 01 Section "Payment Procedures" for requirements for Applications for Payment for Substantial and Final Completion.
2. Division 01 Section "Execution" for progress cleaning of Project site.
3. Division 01 Section "Project Record Documents" for submitting Record Drawings, Record Specifications, and Record Product Data.
4. Division 01 Section "Operation and Maintenance Data" for operation and maintenance manual requirements.
5. Divisions 02 through 49 Sections for specific closeout and special cleaning requirements for the Work in those Sections.

1.3 SUBSTANTIAL COMPLETION

A. Preliminary Procedures: Before requesting inspection for determining date of Substantial Completion, complete the following. List items below that are incomplete in request.

1. Prepare a list of items to be completed and corrected (punch list), the value of items on the list, and reasons why the Work is not complete.
2. Submit specific warranties, workmanship bonds, maintenance service agreements, final certifications, and similar documents.
3. Obtain and submit releases permitting Owner unrestricted use of the Work and access to services and utilities. Include occupancy permits, operating certificates, and similar releases.
4. Prepare and submit Project Record Documents, operation and maintenance manuals, property surveys, and similar final record information.
5. Deliver tools, spare parts, extra materials, and similar items to location designated by Owner.
6. Complete final cleaning requirements, including touchup painting.

B. Inspection: Submit a written request for inspection for Substantial Completion. On receipt of request, Architect will either proceed with inspection or notify Contractor of unfulfilled requirements. Architect will prepare the Certificate of Substantial Completion after inspection

or will notify Contractor of items, either on Contractor's list or additional items identified by Architect, that must be completed or corrected before certificate will be issued.

1. Reinspection: Request reinspection when the Work identified in previous inspections as incomplete is completed or corrected.

2. Reinspection Fees: Should the status of the Work require re-observation by the Architect due to failure of the Work to comply with the Contractor's claims on initial observation the Owner will deduct the amount of the Architect's compensation for reinspection services from the final payment to the Contractor.

1.4 FINAL COMPLETION

A. Preliminary Procedures: Before requesting final inspection for determining date of Final Completion, complete the following:

1. Submit a final Application for Payment according to Division 01 Section "Payment Procedures."
2. Submit certified copy of Architect's Substantial Completion inspection list of items to be completed or corrected (punch list), endorsed and dated by Architect.
3. Instruct Owner's personnel in operation, adjustment, and maintenance of products, equipment, and systems. Submit demonstration and training videotapes.

B. Inspection: Submit a written request for final inspection for acceptance. Architect will prepare a final Certificate for Payment after inspection or will notify Contractor of construction that must be completed or corrected before certificate will be issued.

1.5 LIST OF INCOMPLETE ITEMS (PUNCH LIST)

A. Preparation: Submit two copies of list. Include name and identification of each space and area affected by construction operations for incomplete items and items needing correction.

1. Organize list of spaces in sequential order, starting with exterior areas first and proceeding from lowest floor to highest floor.
2. Organize items applying to each space by major element, including categories for ceiling, individual walls, floors, equipment, and building systems.

1.6 WARRANTIES

A. Organize warranty documents into an orderly sequence based on the table of contents of the Project Manual.
1. Include Warranties as part of Operation and Maintenance Submittal.

PART 2 - PRODUCTS

2.1 MATERIALS

A. Cleaning Agents: Use cleaning materials and agents recommended by manufacturer or fabricator of the surface to be cleaned. Do not use cleaning agents that are potentially hazardous to health or property or that might damage finished surfaces. Coordinate with Owner's ongoing Cleaning Program/Products.

PART 3 - EXECUTION

3.1 FINAL CLEANING

A. Cleaning: Employ experienced workers or professional cleaners for final cleaning. Clean each surface or unit to condition expected in an average commercial building cleaning and maintenance program. Comply with manufacturer's written instructions.

1. Complete the following cleaning operations before requesting inspection for certification of Substantial Completion for entire Project or for a portion of Project:

a. Clean Project site, yard, and grounds, in areas disturbed by construction activities, including landscape development areas, of rubbish, waste material, litter, and other foreign substances.
b. Sweep paved areas broom clean. Remove petrochemical spills, stains, and other foreign deposits.
c. Rake grounds that are neither planted nor paved to a smooth, even-textured surface.
d. Remove snow and ice to provide safe access to building.
e. Vacuum carpet and similar soft surfaces, removing debris and excess nap; shampoo if visible soil or stains remain.
f. Clean transparent materials, including mirrors and glass in doors and windows. Remove glazing compounds and other noticeable, vision-obscuring materials. Replace chipped or broken glass and other damaged transparent materials. Polish mirrors and glass, taking care not to scratch surfaces.
g. Touch up and otherwise repair and restore marred, exposed finishes and surfaces. Replace finishes and surfaces that cannot be satisfactorily repaired or restored or that already show evidence of repair or restoration.
   1) Do not paint over "UL" and similar labels, including mechanical and electrical nameplates.

h. Wipe surfaces of mechanical and electrical equipment and similar equipment. Remove excess lubrication, paint and mortar droppings, and other foreign substances.
   1) Exterior items exposed to view are to be field painted to coordinate with the building exterior color scheme.
i. Clean plumbing fixtures to a sanitary condition, free of stains, including stains resulting from water exposure.
j. Replace disposable air filters and clean permanent air filters. Clean exposed surfaces of diffusers, registers, and grills.
k. Clean light fixtures, lamps, globes, and reflectors to function with full efficiency. Replace burned-out bulbs, and those noticeably dimmed by hours of use, and defective and noisy starters in fluorescent and mercury vapor fixtures to comply with requirements for new fixtures.

END OF SECTION 01 77 00

SECTION 01 78 23 - OPERATION AND MAINTENANCE DATA

PART 1 - GENERAL

1.1 RELATED DOCUMENTS

A. Drawings and general provisions of the Contract, including General and Supplementary Conditions and other Division 01 Specification Sections, apply to this Section.

1.2 SUMMARY

A. This Section includes administrative and procedural requirements for preparing operation and maintenance manuals, including the following:
   1. Operation and maintenance documentation directory.
   2. Maintenance manuals for the care and maintenance of products, materials, and finishes systems and equipment.

B. Related Sections include the following:
   1. Division 01 Section "Submittal Procedures" for submitting copies of submittals for operation and maintenance manuals.
   2. Division 01 Section "Closeout Procedures" for submitting operation and maintenance manuals.
   3. Division 01 Section "Project Record Documents" for preparing Record Drawings for operation and maintenance manuals.
   4. Divisions 02 through 49 Sections for specific operation and maintenance manual requirements for the Work in those Sections.

1.3 SUBMITTALS

A. Initial Submittal: Submit three copies of each manual at least 21 days before requesting inspection for Substantial Completion. Include a complete operation and maintenance directory. Architect will return review and if required return to Contractor for inclusion of additional materials and corrections as required.

B. Operation and Maintenance Manual must be complete and available for Owners use prior to conducting any Testing and Demonstration activities.

1.4 COORDINATION

A. Where operation and maintenance documentation includes information on installations by more than one factory-authorized service representative, assemble and coordinate information furnished by representatives and prepare manuals.

PART 2 - PRODUCTS

2.1 OPERATION AND MAINTENANCE DOCUMENTATION DIRECTORY

A. Organization: Include a section in the directory for each of the following:
   1. List of systems.
   2. List of equipment.
   3. Table of contents.

B. List of Systems and Subsystems: List systems alphabetically. Include references to operation and maintenance manuals that contain information about each system.

C. List of Equipment: List equipment for each system, organized alphabetically by system. For pieces of equipment not part of system, list alphabetically in separate list.

D. Tables of Contents: Include a table of contents for each operation, and maintenance manual.

2.2 MANUALS, GENERAL

A. Manual Contents: Organize into sets of manageable size. Arrange contents alphabetically by system, subsystem, and equipment.

1. Binders: Heavy-duty, 3-ring, vinyl-covered, loose-leaf binders, in thickness necessary to accommodate contents, sized to hold 8-1/2-by-11-inch (215-by-280-mm) paper; with clear plastic sleeve on spine to hold label describing contents and with pockets inside covers to hold folded oversize sheets.
   a. Identify each binder on front and spine, with printed title "OPERATION AND MAINTENANCE MANUAL," Project title or name, and subject matter of contents. Indicate volume number for multiple-volume sets.
2. Dividers: Heavy-paper dividers with plastic-covered tabs for each section. Mark each tab to indicate contents. Include typed list of products and major components of equipment included in the section on each divider, cross-referenced to Specification Section number and title of Project Manual.
3. Protective Plastic Sleeves: Transparent plastic sleeves designed to enclose diagnostic software diskettes for computerized electronic equipment.
4. Drawings: Attach reinforced, punched binder tabs on drawings and bind with text.

2.3 OPERATION MANUALS

A. Content: In addition to requirements in this Section, include operation data required in individual Specification Sections and the following information:

1. System, subsystem, and equipment descriptions.
2. Operating standards.
3. Operating procedures.
4. Operating logs.
5. Wiring diagrams.
6. Control diagrams.
7. Piped system diagrams.
8. Precautions against improper use.
9. License requirements including inspection and renewal dates.

B. Operating Procedures: Include the following, as applicable:

1. Startup procedures.
2. Equipment or system break-in procedures.
3. Routine and normal operating instructions.
4. Regulation and control procedures.
5. Instructions on stopping.
6. Normal shutdown instructions.
7. Seasonal and weekend operating instructions.

8. Required sequences for electric or electronic systems.
9. Special operating instructions and procedures.

C. Systems and Equipment Controls: Describe the sequence of operation, and diagram controls as installed.

D. Piped Systems: Diagram piping as installed, and identify color-coding where required for identification.

2.4 PRODUCT MAINTENANCE MANUAL

A. Content: Organize manual into a separate section for each product, material, and finish. Include source information, product information, maintenance procedures, repair materials and sources, and warranties and bonds, as described below.

B. Product Information: Include the following, as applicable:
1. Product name and model number.
2. Manufacturer's name.
3. Color, pattern, and texture (if applicable).
4. Reordering information for specially manufactured products.

C. Maintenance Procedures: Include manufacturer's written recommendations and the following:
1. Inspection procedures.
2. Types of cleaning agents to be used and methods of cleaning.
3. List of cleaning agents and methods of cleaning detrimental to product.
4. Schedule for routine cleaning and maintenance.
5. Repair instructions.

D. Repair Materials and Sources: Include lists of materials and local sources of materials and related services.

E. Warranties and Bonds: Include copies of warranties and bonds and lists of circumstances and conditions that would affect validity of warranties or bonds.
1. Include procedures to follow and required notifications for warranty claims.

PART 3 - EXECUTION

3.1 MANUAL PREPARATION

A. Product Maintenance Manual: Assemble a complete set of maintenance data indicating care and maintenance of each product, material, and finish incorporated into the Work.

B. Operation and Maintenance Manuals: Assemble a complete set of operation and maintenance data indicating operation and maintenance of each system, subsystem, and piece of equipment not part of a system.
1. Manufacturers' Data: Where manuals contain manufacturers' standard printed data, include only sheets pertinent to product or component installed. Mark each sheet to identify each product or component incorporated into the Work. If data include more than one item in a tabular format, identify each item using appropriate references from the Contract Documents.

C. Comply with Division 01 Section "Closeout Procedures" for schedule for submitting operation and maintenance documentation.

END OF SECTION 01 78 23

SECTION 01 78 39 - PROJECT RECORD DOCUMENTS

PART 1 - GENERAL

1.1 RELATED DOCUMENTS

A. Drawings and general provisions of the Contract, including General and Supplementary Conditions and other Division 01 Specification Sections, apply to this Section.

1.2 SUMMARY

A. This Section includes administrative and procedural requirements for Project Record Documents, including the following:

1. Record Drawings.
2. Record Specifications.

B. Related Sections include the following:

1. Division 01 Section "Payment Procedures" for maintaining Project Record Prints as a monthly requirement prior to payment.
2. Division 01 Section "Closeout Procedures" for general closeout procedures.
3. Division 01 Section "Operation and Maintenance Data" for operation and maintenance manual requirements.
4. Divisions 02 through 49 Sections for specific requirements for Project Record Documents of the Work in those Sections.

1.3 SUBMITTALS

A. Record Drawings: Comply with the following:

1. Number of Copies: Submit one set of marked-up Record Prints.

B. Record Specifications: Submit one copy of Project's Specifications, including addenda and contract modifications.

PART 2 - PRODUCTS

2.1 RECORD DRAWINGS

A. Record Prints: Maintain one set of black-line white prints of the Contract Drawings and Shop Drawings.

1. Preparation: Mark Record Prints to show the actual installation where installation varies from that shown originally. Require individual or entity who obtained record data, whether individual or entity is Installer, subcontractor, or similar entity, to prepare the marked-up Record Prints.

   a. Give particular attention to information on concealed elements that would be difficult to identify or measure and record later.
   b. Record data as soon as possible after obtaining it. Record and check the markup before enclosing concealed installations.

2. Content: Types of items requiring marking include, but are not limited to, the following:

   a. Dimensional changes to Drawings.
   b. Revisions to details shown on Drawings.
   c. Depths of foundations below first floor.

d. Locations and depths of underground utilities.
e. Revisions to routing of piping and conduits.
f. Revisions to electrical circuitry.
g. Actual equipment locations.
h. Duct size and routing.
i. Locations of concealed internal utilities.

B. Format: Identify and date each Record Drawing; include the designation "PROJECT RECORD DRAWING" in a prominent location.

1. Record Prints: Organize Record Prints and newly prepared Record Drawings into manageable sets. Bind each set with durable paper cover sheets. Include identification on cover sheets.

2.2 RECORD SPECIFICATIONS

A. Preparation: Mark Specifications to indicate the actual product installation where installation varies from that indicated in Specifications, addenda, and contract modifications.

1. Give particular attention to information on concealed products and installations that cannot be readily identified and recorded later.
2. Mark copy with the proprietary name and model number of products, materials, and equipment furnished, including substitutions and product options selected.

PART 3 - EXECUTION

3.1 RECORDING AND MAINTENANCE

A. Maintenance of Record Documents and Samples: Store Record Documents and Samples in the field office apart from the Contract Documents used for construction. Do not use Project Record Documents for construction purposes. Maintain Record Documents in good order and in a clean, dry, legible condition, protected from deterioration and loss. Provide access to Project Record Documents for Architect's reference during normal working hours.

END OF SECTION 01 78 39

SECTION 01 79 00 - DEMONSTRATION AND TRAINING

PART 1 - GENERAL

1.1 RELATED DOCUMENTS

A. Drawings and general provisions of the Contract, including General and Supplementary Conditions and other Division 01 Specification Sections, apply to this Section.

1.2 SUMMARY

A. This Section includes administrative and procedural requirements for instructing Owner's personnel, including the following:

1. Demonstration of operation of systems, subsystems, and equipment.
2. Training in operation and maintenance of systems, subsystems, and equipment.
3. Demonstration and training DVD's.

B. Related Sections include the following:

1. Division 01 Section "Project Management and Coordination" for requirements for pre-instruction conferences.
2. Divisions 02 through 49 Sections for specific requirements for demonstration and training for products in those Sections.

1.3 SUBMITTALS

A. Instruction Program: Submit two copies of outline of instructional program for demonstration and training, including a schedule of proposed dates, times, length of instruction time, and instructors' names for each training module. Include learning objective and outline for each training module.

1. At completion of training, submit one complete training manual(s) for Owner's use.

B. Attendance Record: For each training module, submit list of participants and length of instruction time.

1. Use form provided at the end of this Sections

C. Demonstration and Training Videos: Submit two copies within seven days of end of each training module.

1. Identification: On each copy, provide an applied label with the following information:

a. Name of Project.
b. Name and address of photographer.
c. Name of Architect.
d. Name of Contractor.
e. Date video was recorded.

1.4 QUALITY ASSURANCE

A. Facilitator Qualifications: A firm or individual experienced in training or educating maintenance personnel in a training program similar in content and extent to that indicated for

this Project, and whose work has resulted in training or education with a record of successful learning performance.

1. Requirement can be waived with Approval of Architect and Owner based on Contractor experience in training Owner's personnel.

1.5 COORDINATION

A. Coordinate instruction schedule with Owner's operations. Adjust schedule as required to minimize disrupting Owner's operations.

B. Coordinate content of training modules with content of approved operation, and maintenance manuals. Do not submit instruction program until operation and maintenance data has been reviewed and approved by Architect.

PART 2 - PRODUCTS

2.1 INSTRUCTION PROGRAM

A. Program Structure: Develop an instruction program that includes individual training modules for each system and equipment not part of a system, as required by individual Specification Sections.

B. Training Modules: Develop a learning objective and teaching outline for each module. Include a description of specific skills and knowledge that participant is expected to master. For each module, include instruction for the following:

1. Documentation: Review the following items in detail:
   a. Emergency manuals.
   b. Operations manuals.
   c. Maintenance manuals.
   d. Project Record Documents.
   e. Identification systems.
   f. Warranties and bonds.
   g. Maintenance service agreements and similar continuing commitments.
2. Emergencies: Include the following, as applicable:
   a. Instructions on meaning of warnings, trouble indications, and error messages.
   b. Instructions on stopping.
   c. Shutdown instructions for each type of emergency.
   d. Operating instructions for conditions outside of normal operating limits.
   e. Sequences for electric or electronic systems.
   f. Special operating instructions and procedures.
3. Operations: Include the following, as applicable:
   a. Startup procedures.
   b. Equipment or system break-in procedures.
   c. Routine and normal operating instructions.
   d. Regulation and control procedures.
   e. Control sequences.
   f. Safety procedures.
   g. Instructions on stopping.

h. Normal shutdown instructions.
i. Operating procedures for emergencies.
j. Operating procedures for system, subsystem, or equipment failure.
k. Seasonal and weekend operating instructions.
l. Required sequences for electric or electronic systems.
m. Special operating instructions and procedures.

4. Adjustments: Include the following:
   a. Alignments.
   b. Checking adjustments.
   c. Noise and vibration adjustments.
   d. Economy and efficiency adjustments.

5. Troubleshooting: Include the following:
   a. Diagnostic instructions.
   b. Test and inspection procedures.

6. Maintenance: Include the following:
   a. Inspection procedures.
   b. Types of cleaning agents to be used and methods of cleaning.
   c. List of cleaning agents and methods of cleaning detrimental to product.
   d. Procedures for routine cleaning
   e. Procedures for preventive maintenance.
   f. Procedures for routine maintenance.
   g. Instruction on use of special tools.

7. Repairs: Include the following:
   a. Diagnosis instructions.
   b. Repair instructions.
   c. Disassembly; component removal, repair, and replacement; and reassembly instructions.
   d. Instructions for identifying parts and components.
   e. Review of spare parts needed for operation and maintenance.

PART 3 - EXECUTION

3.1 INSTRUCTION

A. Facilitator: Provide a qualified facilitator to prepare instruction program and training modules.

3.2 DEMONSTRATION AND TRAINING VIDEOS

A. General: Engage a qualified commercial photographer to record demonstration and training videos. Record each training module separately. Include classroom instructions and demonstrations, board diagrams, and other visual aids, but not student practice.
   1. At beginning of each training module, record each chart containing learning objective and lesson outline.

B. Video Format: Provide high-quality DVD recording as agreed upon with Owner for Owner's play back equipment.

DOCUMENTATION OF TRAINING

DATE:

TIME:

ATTENDEES:

This is to acknowledge that _____, (trainer) provided instruction to the Santa Fe County Public Works Department (trainees) on the routine adjustments and maintenance of the _____ for proper operation.

SIGNATURE OF TRAINER:

_____

DATE

SIGNATURE OF TRAINEES:

_____ DATE_____

_____ DATE_____

_____ DATE_____

_____ DATE_____

_____ DATE_____

_____ DATE_____

_____ DATE_____

cc: Owner:
Contractor:
Architect: McClain + Yu

END OF SECTION 01 79 00

SECTION 01 81 00 - GENERAL COMMISSIONING REQUIREMENTS

PART 1 GENERAL

1.1 SUMMARY

A. Commissioning is intended to achieve the following specific objectives; this section specifies the Contractor's responsibilities for commissioning:

1. Verify that the work is installed in accordance with the Contract Documents and the manufacturer's recommendations and instructions, and that it receives adequate operational checkout prior to startup: Startup reports and Pre-functional Checklists executed by Contractor are utilized to achieve this.

2. Verify and document that functional performance is in accordance with the Contract Documents: Functional Tests executed by Contractor and witnessed by the Commissioning Authority are utilized to achieve this.

3. Verify that operation and maintenance manuals submitted to Owner are complete: Detailed operation and maintenance (O&M) data submittals by Contractor are utilized to achieve this.

4. Verify that the Owner's operating personnel are adequately trained: Formal training conducted by Contractor is utilized to achieve this.

B. Commissioning, including Functional Tests, O&M documentation review, and training, is to occur after startup and initial checkout and be completed before Substantial Completion

C. The Commissioning Authority directs and coordinates all commissioning activities; this section describes some but not all of the Commissioning Authority's responsibilities.

D. The Commissioning Authority is employed by Owner.

1.2 SCOPE OF COMMISSIONING

A. The following are to be commissioned:

B. Plumbing Systems:

1. Domestic Hot and Cold Water distribution, DHW Recirculation Pump(s), backflow devices, water hammer arresters, etc.

2. Sanitary waste & vents, cleanouts, condensate drains.

C. HVAC System, including:

1. Major and minor equipment items, including EF-1 through EF-3

2. Ductwork and accessories.

3. Control systems.

4. Variable frequency drives.

D. Special Ventilation:

1. Specialty fans.

E. Electrical Systems:

1. Lighting controls other than manual switches.

2. Power and control of electric motors for mechanical equipment.

F. Other equipment and systems explicitly identified elsewhere in Contract Documents as requiring commissioning.

1.3 RELATED REQUIREMENTS

A. Section 017000 - Execution and Closeout Requirements: General startup requirements.

B. Section 017800 - Closeout Submittals: Scope and procedures for operation and maintenance manuals and project record documents.

C. Section 019113 - Commissioning Authority Responsibilities.

D. Section 230800 - Commissioning of HVAC: HVAC control system testing; other requirements.

1.4 REFERENCE STANDARDS

A. PECI (Samples) - Sample Forms for Pre-functional Checklists and Functional Performance Tests; Portland Energy Conservation, Inc.; located at http://www.peci.org/library/mcpgs.htm; current edition.

1.5 SUBMITTALS

A. See Section 013000 – Submittal Procedures, for submittal procedures; except:

1. Make all submittals specified in this section, and elsewhere where indicated for commissioning purposes, directly to the Commissioning Authority, unless they require review by Architect; in that case, submit to Architect first.

2. Submit one copy to the Commissioning Authority, not to be returned.

3. Make commissioning submittals on time schedule specified by Commissioning Authority.

4. Submittals indicated as "Draft" are intended for the use of the Commissioning Authority in preparation of Pre-functional Checklists or Functional Test requirements.

5. As soon as possible after submittals made to Architect are approved, submit copy of approved submittal to the Commissioning Authority.

B. Manufacturers' Instructions: Submit copies of all manufacturer-provided instructions that are shipped with the equipment as soon as the equipment is delivered.

C. Product Data: If submittals to Architect do not include the following, submit copies as

soon as possible:

1. Manufacturer's product data, cut sheets, and shop drawings.
2. Manufacturer's installation instructions.
3. Startup, operating, and troubleshooting procedures.
4. Fan and pump curves.
5. Factory test reports.
6. Warranty information, including details of Owner's responsibilities in regard to keeping warranties in force.

D. Startup Plans and Reports.

E. Completed Pre-functional Checklists.

PART 2 PRODUCTS

2.1 TEST EQUIPMENT

A. Provide all standard testing equipment required to perform startup and initial checkout and required Functional Testing; unless otherwise noted such testing equipment will NOT become the property of Owner.

B. Calibration Tolerances: Provide testing equipment of sufficient quality and accuracy to test and/or measure system performance with the tolerances specified. If not otherwise noted, the following minimum requirements apply:

1. Temperature Sensors and Digital Thermometers: Certified calibration within past year to accuracy of 0.5 degree F and resolution of plus/minus 0.1 degree F.
2. Pressure Sensors: Accuracy of plus/minus 2.0 percent of the value range being measured (not full range of meter), calibrated within the last year.
3. Calibration: According to the manufacturer’s recommended intervals and when dropped or damaged; affix calibration tags or keep certificates readily available for inspection.

C. Equipment-Specific Tools: Where special testing equipment, tools and instruments are specific to a piece of equipment, are only available from the vendor, and are required in order to accomplish startup or Functional Testing, provide such equipment, tools, and instruments as part of the work at no extra cost to Owner; such equipment, tools, and instruments are to become the property of Owner.

D. Data-loggers: Independent equipment and software for monitoring flows, currents, status, pressures, etc. of equipment.

1. Data-loggers required to for Functional Tests will be provided by the Commission-

ing Authority and will not become the property of Owner.

PART 3 EXECUTION

3.1 COMMISSIONING PLAN

A. Commissioning Authority will prepare the Commissioning Plan.

1. Attend meetings called by the Commissioning Authority for purposes of completing the commissioning plan.

2. Require attendance and participation of relevant subcontractors, installers, suppliers, and manufacturer representatives.

B. Contractor is responsible for compliance with the Commissioning Plan.

C. Commissioning Plan: The commissioning schedule, procedures, and coordination requirements for all parties in the commissioning process.

1. Commissioning may be phased (by floors, for example) to minimize the total construction time.

D. Basis of Design Documentation (BOD): Detailed documentation of the functional requirements of the project; descriptions of the systems, components, and methods chosen to meet the design intent; assumptions underlying the design intent.

1. Basis of Design Documentation is to be prepared by Engineer.

E. Commissioning Schedule:

1. Submit anticipated dates of startup of each item of equipment and system to Commissioning Authority within 60 days after award of Contract.

2. Re-submit anticipated startup dates monthly, but not less than 4 weeks prior to startup.

3. Pre-functional Checklists and Functional Tests are to be performed in sequence from components, to subsystems, to systems.

4. Provide sufficient notice to Commissioning Authority for delivery of relevant Checklists and Functional Test procedures, to avoid delay.

3.2 STARTUP PLANS AND REPORTS

A. Startup Plans: For each item of equipment and system for which the manufacturer provides a startup plan, submit the plan not less than 8 weeks prior to startup.

B. Startup Reports: For each item of equipment and system for which the manufacturer provides a startup checklist (or startup plan or field checkout sheet), document compliance by submitting the completed startup checklist prior to startup, signed and dated by responsible entity.

C. Submit directly to the Commissioning Authority.

3.3 PREFUNCTIONAL CHECKLISTS

A. A Pre-functional Checklist is required to be filled out for each item of equipment or other assembly specified to be commissioned.

1. No sampling of identical or near-identical items is allowed.

2. These checklists do not replace manufacturers' recommended startup checklists, regardless of apparent redundancy.

3. Pre-functional Checklist forms will not be complete until after award of the contract; the following types of information will be gathered via the completed Checklist forms:

a. Certification by installing contractor that the unit is properly installed, started up, and operating and ready for Functional Testing.

b. Manufacturer, model number, and relevant capacity information; list information "as specified," "as submitted," and "as installed."

c. Serial number of installed unit.

d. List of inspections to be conducted to document proper installation prior to startup and Functional Testing; these will be primarily static inspections and procedures; for equipment and systems may include normal manufacturer’s start-up checklist items and minor testing.

e. Sensor and actuator calibration information.

5. Samples of Pre-functional Checklist forms that indicate anticipated level of detail can be found at http://www.peci.org/library/mcpgs.htm.

B. Contractor is responsible for filling out Pre-functional Checklists, after completion of installation and before startup; witnessing by the Commissioning Authority is not required unless otherwise specified.

1. Each line item without deficiency is to be witnessed, initialed, and dated by the actual witness; checklists are not complete until all line items are initialed and dated complete without deficiencies.

2. Checklists with incomplete items may be submitted for approval provided the Contractor attests that incomplete items do not preclude the performance of safe and reliable Functional Testing; re-submission of the Checklist is required upon completion of remaining items.

3. Individual Checklists may contain line items that are the responsibility of more than one installer; Contractor shall assign responsibility to appropriate installers or subcontractors, with identification recorded on the form.

4. If any Checklist line item is not relevant, record reasons on the form.

5. Contractor may independently perform startup inspections and/or tests, at his option.

6. Regardless of these reporting requirements, Contractor is responsible for correct startup and operation.

7. Submit completed Checklists to Commissioning Authority within two days of completion.

8. See Section 017000 for additional general startup requirements.

C. Commissioning Authority is responsible for furnishing the Pre-functional Checklists to Contractor.

1. Initial Drafts: Contractor is responsible for initial draft of Pre-functional Checklist where so indicated in the Contract Documents.

2. Provide all additional information requested by Commissioning Authority to aid in preparation of checklists, such as shop drawing submittals, manufacturers' startup checklists, and O&M data.

3. Commissioning Authority may add any relevant items deemed necessary regardless of whether they are explicitly mentioned in the Contract Documents or not.

4. When asked to review the proposed Checklists, do so in a timely manner.

D. Commissioning Authority Witnessing: Required for:

1. Each piece of primary equipment, unless sampling of multiple similar units is allowed by the commissioning plan.

2. A sampling of non-primary equipment, as allowed by the commissioning plan.

E. Deficiencies: Correct deficiencies and re-inspect or re-test, as applicable, at no extra cost to Owner.

1. If difficulty in correction would delay progress, report deficiency to the Commissioning Authority immediately.

3.4 FUNCTIONAL TESTS

A. A Functional Test is required for each item of equipment, system, or other assembly specified to be commissioned, unless sampling of multiple identical or near-identical units is allowed by the final test procedures.

B. Contractor is responsible for execution of required Functional Tests, after completion of Pre-functional Checklist and before closeout.

C. Commissioning Authority is responsible for witnessing and reporting results of Functional Tests, including preparation and completion of forms for that purpose.

D. Contractor is responsible for correction of deficiencies and re-testing at no extra cost to Owner; if a deficiency is not corrected and re-tested immediately, the Commissioning Authority will document the deficiency and the Contractor's stated intentions regarding correction.

1. Deficiencies are any condition in the installation or function of a component, piece of equipment or system that is not in compliance with the Contract Documents or does not perform properly.

2. Use the standard form provided with copies submitted to Owner and Contractor.

3. When the deficiency has been corrected, the Contractor completes the form certifying that the item is ready to be re-tested and returns the form to the Commissioning Authority; the Commissioning Authority will reschedule the test and the Contractor shall re-test.

4. Identical or Near-Identical Items: If 10 percent, or three, whichever is greater, of identical or near-identical items fail to perform due to material or manufacturing defect, all items will be considered defective; provide a proposal for correction within 2 weeks after notification of defect, including provision for testing sample installations prior to replacement of all items.

5. Contractor shall bear the cost of Owner and Commissioning Authority personnel time witnessing re-testing if the test failed due to failure to execute the relevant Pre-functional Checklist correctly; if the test failed for reasons that would not have been identified in the Pre-functional Checklist process, Contractor shall bear the cost of the second and subsequent re-tests.

E. Functional Test Procedures:

1. Examples of Functional Testing:

a. Test the dynamic function and operation of equipment and systems (rather than just components) using manual (direct observation) or monitoring methods under full operation (e.g., the chiller pump is tested interactively with the chiller functions to see if the pump ramps up and down to maintain the differential pressure set point).

b. Systems are tested under various modes, such as during low cooling or heating loads, high loads, component failures, unoccupied, varying outside air temperatures, fire alarm, power failure, etc.

c. Systems are run through all the HVAC control system’s sequences of operation and components are verified to be responding as the sequence's state.

d. Traditional air or water test and balancing (TAB) is not Functional Testing; spot checking of TAB by demonstration to the Commissioning Authority is Functional Testing.

2. Some preliminary Functional Test procedures are included in the contract documents; the Commissioning Authority has the authority to modify these and will furnish final versions as applicable.

3. Samples of Functional Test forms that indicate anticipated level of detail can be found at http://www.peci.org/library/mcpgs.htm.

F. Deferred Functional Tests: Some tests may need to be performed later, after substantial

completion, due to partial occupancy, equipment, seasonal requirements, design or other site conditions; performance of these tests remains the Contractor's responsibility regardless of timing.

3.6 SENSOR AND ACTUATOR CALIBRATION

A. Calibrate all field-installed temperature, relative humidity, carbon monoxide, carbon dioxide, and pressure sensors and gages, and all actuators (dampers and valves). Sensors installed in the unit at the factory with calibration certification provided need not be field calibrated.

B. Calibrate using the methods described below; alternate methods may be used, if approved by Owner beforehand. See PART 2 for test instrument requirements. Record methods used on the relevant Pre-functional Checklist or other suitable forms, documenting initial, intermediate and final results.

C. All Sensors:

1. Verify that sensor location is appropriate and away from potential causes of erratic operation.

2. Verify that sensors with shielded cable are grounded only at one end.

3. For sensor pairs that are used to determine a temperature or pressure difference, for temperature make sure they are reading within 0.2 degree F of each other, and for pressure, within tolerance equal to 2 percent of the reading, of each other.

4. Tolerances for critical applications may be tighter.

D. Sensors without Transmitters - Standard Application:

1. Make a reading with a calibrated test instrument within 6 inches of the site sensor.

2. Verify that the sensor reading, via the permanent thermostat, gage or building automation system, is within the tolerances in the table below of the instrument-measured value.

3. If not, install offset, calibrate or replace sensor.

E. Sensor Tolerances for Standard Applications: Plus/minus the following maximums:

1. Watt hour, Voltage, Amperage: 1 percent of design.

2. Pressure, Air, Water, Gas: 3 percent of design.

3. Air Temperatures (Outside Air, Space Air, and Duct Air): 0.4 degrees F.

4. Relative Humidity: 4 percent of design.

5. Barometric Pressure: 0.1 inch of Hg.

6. Flow Rate, Air: 10 percent of design.

7. Flow Rate, Water: 4 percent of design.

8. Flow Rate, Steam: 3 percent of design.

9. AHU Wet Bulb and Dew Point: 2.0 degrees F.

10. Hot Water Coil and Boiler Water Temperature: 1.5 degrees F.

11. Cooling Coil, Chilled and Condenser Water Temperatures: 0.4 degrees F.

12. Combustion Flue Temperature: 5.0 degrees F.

13. Oxygen and CO2 Monitors: 0.1 percentage points.

14. CO Monitor: 0.01 percentage points.

15. Natural Gas and Oil Flow Rate: 1 percent of design.

F. Critical Applications: For some applications more rigorous calibration techniques may be required for selected sensors. Describe any such methods used on an attached sheet.

H. Valve/Damper Stroke Setup and Check:

1. For all valve/damper actuator positions checked, verify the actual position against the control system readout.

2. Set pump/fan to normal operating mode.

3. Command valve/damper closed; visually verify that valve/damper is closed and adjust output zero signal as required.

4. Command valve/damper to open; verify position is full open and adjust output signal as required.

5. Command valve/damper to a few intermediate positions.

6. If actual valve/damper position does not reasonably correspond, replace actuator or add pilot positioner (for pneumatics).

I. Isolation Valve or System Valve Leak Check: For valves not associated with coils.

1. With full pressure in the system, command valve closed.

2. Use an ultra-sonic flow meter to detect flow or leakage.

3.7 TEST PROCEDURES - GENERAL

A. Provide skilled technicians to execute starting of equipment and to execute the Functional Tests. Ensure that they are available and present during the agreed upon schedules and for sufficient duration to complete the necessary tests, adjustments and problem-solving.

B. Provide all necessary materials and system modifications required to produce the flows, pressures, temperatures, and conditions necessary to execute the test according to the specified conditions. At completion of the test, return all affected equipment and systems to their pre-test condition.

C. Sampling: Where Functional Testing of fewer than the total number of multiple identical or near-identical items is explicitly permitted, perform sampling as follows:

1. Identical Units: Defined as units with same application and sequence of operation; only minor size or capacity difference.

2. Sampling is not allowed for:

a. Major equipment.

b. Life-safety-critical equipment.

c. Pre-functional Checklist execution.

3. Randomly test at least 15 percent of each group of identical equipment, but not less than three units. This constitutes the "first sample."

6. If 15 percent of the units in the first sample fail, test another 15 percent of the remaining identical units.

7. If any of the units in the second sample fail, test all remaining identical units.

8. If frequent failures occur, resulting in more troubleshooting than testing, the Commissioning Authority may stop the testing and require Contractor to perform and document a checkout of the remaining units prior to continuing testing.

D. Manual Testing: Use hand-held instruments, immediate control system readouts, or direct observation to verify performance (contrasted to analyzing monitored data taken over time to make the “observation”).

E. Over-Writing Values: Change the sensor value known to the control system in the control system to see the response of the system; for example, change the outside air temperature value from 50 degrees F to 75 degrees F to verify economizer operation.

H. Indirect Indicators: Remote indicators of a response or condition, such as a reading from a control system screen reporting a damper to be 100 percent closed, are considered indirect indicators.

I. Monitoring: Record parameters (flow, current, status, pressure, etc.) of equipment operation using dataloggers or the trending capabilities of the relevant control systems; where monitoring of specific points is called for in Functional Test Procedures:

1. All points that are monitored by the relevant control system shall be trended by Contractor; at the Commissioning Authority’s request, Contractor shall trend up to 20 percent more points than specified at no extra charge.

2. Other points may be monitored by the Commissioning Authority using dataloggers.

3. At the option of the Commissioning Authority, some control system monitoring may be replaced with datalogger monitoring.

4. Graphical output is desirable and is required for all output if the system can produce it.

5. Monitoring may be used to augment manual testing.

3.8 OPERATION AND MAINTENANCE MANUALS

A. See Section 017800 for additional requirements.

B. Submit manuals related to items that were commissioned to Commissioning Authority for review; make changes recommended by Commissioning Authority.

END OF SECTION

SECTION 02 41 19 - SELECTIVE SITE DEMOLITION

PART 1 - GENERAL

1.1 RELATED DOCUMENTS

A. Drawings and general provisions of the Contract, including General and Supplementary Conditions and other Division 01 Specification Sections, apply to this Section.

1.2 SUMMARY

A. This Section includes the following:

1. Demolition and removal of selected exterior elements.

B. Related Sections include the following:

1. Division 01 Section "Summary" for use of premises and Owner-occupancy requirements.
2. Division 01 Section "Photographic Documentation" for preconstruction photographs taken before selective demolition operations.
3. Division 01 Section "Temporary Facilities and Controls" for temporary construction and environmental-protection measures for selective demolition operations.

1.3 DEFINITIONS

A. Remove: Detach items from existing construction and legally dispose of them off-site, unless indicated to be removed and salvaged or removed and reinstalled.

B. Remove and Salvage: Detach items from existing construction and deliver them to Owner.
1. Salvage/Recycle removed items.

C. Remove and Reinstall: Detach items from existing construction, prepare them for reuse, and reinstall them where indicated.

D. Existing to Remain: Existing items of construction that are not to be removed and that are not otherwise indicated to be removed, removed and salvaged, or removed and reinstalled.

1.4 MATERIALS OWNERSHIP

A. Historic items, relics, and similar objects including, but not limited to, cornerstones and their contents, commemorative plaques and tablets, antiques, and other items of interest or value to Owner that may be encountered during selective demolition remain Owner's property. Carefully remove and salvage each item or object in a manner to prevent damage and deliver promptly to Owner.

1.5 SUBMITTALS

A. Inventory: After selective demolition is complete, submit a list of items that have been removed and salvaged.

B. Pre-demolition Photographs or DVD's: Show existing conditions of adjoining construction and site improvements, including finish surfaces that might be misconstrued as damage caused by Selective Demolition operations. Comply with Division 01 Section "Photographic Documentation." Submit before Work begins.

1.6 QUALITY ASSURANCE

A. Demolition Firm Qualifications: An experienced firm that has specialized in demolition work similar in material and extent to that indicated for this Project..

B. Regulatory Requirements: Comply with governing EPA notification regulations before beginning selective demolition. Comply with hauling and disposal regulations of authorities having jurisdiction.

C. Standards: Comply with ANSI A10.6 and NFPA 241.

1.7 PROJECT CONDITIONS

A. Owner will occupy portions of buildings and site immediately adjacent to selective demolition area. Conduct selective demolition so Owner's operations will not be disrupted.

B. Conditions existing at time of inspection for bidding purpose will be maintained by Owner as far as practical.

C. Notify Architect of discrepancies between existing conditions and Drawings before proceeding with selective demolition.

D. Hazardous Materials: It is unknown whether hazardous materials will be encountered in the Work.

1. If materials suspected of containing hazardous materials are encountered, do not disturb; immediately notify Architect and Owner. Owner will remove hazardous materials under a separate contract.

E. Storage or sale of removed items or materials on-site is not permitted.

Utility Service: Maintain existing utilities indicated to remain in service and protect them against damage during selective demolition operations.

1. Maintain fire-protection facilities in service during selective demolition operations.

PART 2 - PRODUCTS (Not Used)

PART 3 - EXECUTION

3.1 EXAMINATION

A. Verify that utilities have been disconnected and capped.

B. Survey existing conditions and correlate with requirements indicated to determine extent of selective demolition required.

C. When unanticipated mechanical, electrical, or structural elements that conflict with intended function or design are encountered, investigate and measure the nature and extent of conflict. Promptly submit a written report to Architect.

D. Survey of Existing Conditions: Record existing conditions by use of preconstruction photographs and/or preconstruction DVD's.

1. Comply with requirements specified in Division 01 Section "Photographic Documentation."

3.2 UTILITY SERVICES AND MECHANICAL/ELECTRICAL SYSTEMS

A. Existing Services/Systems: Maintain services/systems indicated to remain and protect them against damage during selective demolition operations.

B. Service/System Requirements: Locate, identify, disconnect, and seal or cap off indicated utility services and mechanical/electrical systems serving areas to be selectively demolished.

1. Owner will arrange to shut off indicated services/systems when requested by Contractor.
2. If services/systems are required to be removed, relocated, or abandoned, before proceeding with selective demolition provide temporary services/systems that bypass area of selective demolition and that maintain continuity of services/systems to other parts of the Campus / building

3.3 PREPARATION

A. Site Access and Temporary Controls: Conduct selective demolition and debris-removal operations to ensure minimum interference with roads, streets, walks, walkways, and other adjacent occupied and used facilities.

1. Comply with requirements for access and protection specified in Division 01 Section "Temporary Facilities and Controls."

B. Temporary Facilities: Provide temporary barricades and other protection required to prevent injury to people and damage to adjacent buildings and facilities to remain.

1. Provide protection to ensure safe passage of people around selective demolition area and to and from occupied portions of adjacent buildings

C. Temporary Shoring: Provide and maintain shoring, bracing, and structural supports as required to preserve stability and prevent movement, settlement, or collapse of soils containing adjacent buildings and utilities to remain.

3.4 SELECTIVE DEMOLITION, GENERAL

A. General: Demolish and remove existing construction only to the extent required by new construction and as indicated. Use methods required to complete the Work within limitations of governing regulations and as follows:
   1. Neatly cut openings and holes plumb, square, and true to dimensions required. Use cutting methods least likely to damage construction to remain or adjoining construction. Use hand tools or small power tools designed for sawing or grinding, not hammering and chopping, to minimize disturbance of adjacent surfaces. Temporarily cover openings to remain.
   2. Do not use cutting torches until work area is cleared of flammable materials. At concealed spaces, such as duct and pipe interiors, verify condition and contents of hidden space before starting flame-cutting operations. Maintain fire watch and portable fire-suppression devices during flame-cutting operations.
   3. Maintain adequate ventilation when using cutting torches.
   4. Dispose of demolished items and materials promptly. Comply with requirements in Division 01 Section "Construction Waste Management and Disposal."

B. Existing Items to Remain: Protect construction indicated to remain against damage and soiling during selective demolition.

3.5 DISPOSAL OF DEMOLISHED MATERIALS

A. General: Except for items or materials indicated to be recycled, reused, salvaged, reinstalled, or otherwise indicated to remain Owner's property, remove demolished materials from Project site and legally dispose of them in an EPA-approved landfill.

   1. Do not allow demolished materials to accumulate on-site.
   2. Remove and transport debris in a manner that will prevent spillage on adjacent surfaces and areas.
   3. Coordinate first subparagraph below with use of elevators, stairs, or building entries permitted by building manager.

B. Burning: Do not burn demolished materials.

C. Disposal: Transport demolished materials off Owner's property and legally dispose of them.

3.6 CLEANING

A. Clean adjacent structures and improvements of dust, dirt, and debris caused by selective demolition operations. Return adjacent areas to condition existing before selective demolition operations began.

END OF SECTION 02 41 19

SECTION 03 10 00 - CONCRETE FORMWORK

PART 1 - GENERAL

1.1 RELATED DOCUMENTS

A. Drawings and general provisions of the Contract, including General and Supplementary Conditions and Division 01 Specification Sections, apply to this Section.

1.2 WORK INCLUDED

A. This section includes formwork for cast-in-place concrete, including installation of embedded items.

1.3 RELATED WORK SPECIFIED ELSEWHERE

A. Division 03 Section “Concrete Reinforcement”
B. Division 03 Section “Cast-In-Place Concrete”

1.3 QUALITY ASSURANCE

A. Comply with the requirements of Chapter 4 of the American Concrete Institute “Specifications for Structural Concrete for Buildings”, ACI 301-89.

1.4 REFERENCE STANDARDS

A. American Society for Testing and Materials (ASTM)

1. D 226-89 Asphalt - Saturated Organic Felt used in Roofing and Waterproofing"
2. D 1751-83 Preformed Expansion Joint Filler for Concrete Paving and Structural Construction.

PART 2 - PRODUCTS

2.1 MATERIALS

A. Forms for Exposed Finish Concrete: Plywood complying with U.S. Product Standard PS-1-83 "B-B (Concrete Form) Plywood", Class I, Exterior Grade or better or metal, metal-framed plywood or other acceptable panel-type materials. Plywood shall be mill-oiled and edge-sealed, with each piece bearing legible inspection trademark. Furnish in largest practicable sizes to minimize number of joints. Provide form material with sufficient thickness to withstand pressure of newly placed concrete without bow or deflection.

B. Forms for Unexposed Finish Concrete: Use plywood, lumber, metal or other acceptable material. Provide lumber dressed on at least 2 edges and one side for tight fit.

C. Chamfer Strips: ¾ inch by ¾ inch wood, PVC, or rubber.

D. Preformed Construction Joint: 24-gage steel, galvanized, shaped to form a continuous tongue and groove key.

E. Expansion Joint Material: Asphalt saturated fiberboard, ½ inch thick, meeting the requirements of ASTM D 1751.

F. Felt: Asphalt-saturated organic felt, weighing 30 pounds per 100 square feet, meeting the requirements of ASTM D 226.

PART 3 - EXECUTION

3.1 COORDINATION

A. Coordinate the installation of joint materials and moisture barriers with placement of forms and reinforcing steel. Set screeds accurately. Embedded items shall be accurately aligned and adequately supported. Verify installation of mechanical, plumbing, and electrical items to be embedded in concrete. Correct any unsatisfactory condition before proceeding further.

B. Verify all form coating and form products are compatible with crystalline waterproofing.

3.2 PREPARATION

A. Form Coating: Coat contact surfaces of forms with a form coating compound before reinforcement is placed. Thin form-coating compounds with thinning agent and apply as specified in manufacturer's instructions. Do not allow excess form-coating material to accumulate in forms or to come into contact with concrete surfaces against which fresh concrete will be placed.

3.3 INSTALLATION

A. Formwork: Formwork shall support vertical and lateral loads that are applied until such loads can be supported by concrete structure. Formwork shall be readily removable without impact, shock or damage to cast-in-place concrete surfaces and adjacent materials. Construct forms to sizes, shapes, lines and dimensions shown. Perform surveys to obtain accurate alignment. Provide for recesses, chamfers, blocking, anchorages, inserts, and other features required in work. Select materials to obtain required finishes. Butt joints solidly and provide backup at joints to prevent leakage of cement paste.

C. Chamfer Strips: Provide at exposed corners and edges.

D. Form Ties: Use factory fabricated, adjustable-length, removable or snap-off metal form ties, designed to prevent form deflection and to prevent spalling concrete surfaces upon removal.

E. Cleaning and Tightening: Thoroughly clean forms and adjacent surfaces to receive concrete. Remove chips, wood, sawdust, dirt, or other debris before concrete is placed. Retighten forms and bracing after concrete placement as required to eliminate mortar leaks and maintain proper alignment.

3.4 INSTALLATION OF EMBEDDED ITEMS

A. General: Set anchorage devices and other embedded items accurately. Use setting drawings, diagrams, templates and printed instructions provided by supplier. Secure embedded items such that they are not displaced during placement of concrete.

3.5 JOINTS

A. Construction Joints: Locate and install construction joints, which are not shown on drawings, so as not to impair strength and appearance of the structure. Place construction joints perpendicular to the main reinforcement. Continue reinforcement across construction joints unless noted otherwise.

B. Keyways: Provide keyways at least 1-½ inch deep in construction joints in walls and slabs.

C. Preformed Construction Joint For Slabs on Grade: Secure with galvanized steel stakes, 1/8 inch thick by 1-1/8 inches wide with ½ inch deep rib and tapered point. Splice adjoining joints with 24 gage steel, galvanized splice plates.

D. Isolation Joints in Slabs on Grade: Construct isolation joints in interior slabs using 30 lb. felt. Provide isolation joints at points of contact between slabs on grade and vertical surfaces, such as column pedestals, foundation walls, grade beams and elsewhere as indicated. Construct isolation joints on exterior slabs abutting vertical surfaces with ½ inch thick expansion joint material.

F. Control Joints in Slabs-on-Grade:

1. Preformed Strip: Insert premolded rigid plastic, or metal strip into fresh concrete. Cut groove for strip using 10-foot long straight edge cutting tool. Depths of strip shall be one fourth of slab thickness. Press strip into groove such that top of strip is level with the concrete surface. Pull off removable top section, if any, prior to troweling.

2. Saw Cut: Contractor may saw cut control joints instead of using preformed strips. Saw cut joints shall be 1/8 inch wide. Saw cut depth should equal 1/3 of slab depth. Cut joints after concrete has hardened sufficiently to prevent raveling; usually 4 to 12 hours after slab has been cast and finished. Use diamond or silicone-carbide blades.

3.6 REMOVAL OF FORMWORK

A. General: Prevent excessive deflection, distortion, and damage to concrete when forms are stripped. Provide crush plates or wrecking plates where stripping may damage cast concrete surfaces.

END OF SECTION

SECTION 03 20 00 – CONCRETE REINFORCEMENT

PART 1 - GENERAL

1.1 WORK INCLUDED:

A. This section includes fabrication and installation of deformed bar and welded wire fabric reinforcing steel.

1.2 RELATED WORK SPECIFIED ELSEWHERE

A. Division 03 Section "Cast-in-Place Concrete"

1.3 QUALITY ASSURANCE

A. Reference Standards

1. American Concrete Institute (ACI) Standards

   a. 301-10 Specifications for Structural Concrete for Buildings
   b. SP-66 Detailing Manual
   c. 318-08 Building Code Requirements for Reinforced Concrete

2. American Society for Testing and Materials (ASTM), Standard Specifications

   a. A 82-02 Steel Wire, Plain, for Concrete Reinforcement
   b. A 185-02 Steel Welded Steel Wire Fabric, Plain, for Concrete Reinforcement
   c. A 615-04b Deformed and Plain Billet-Steel Bars for Concrete Reinforcement

3. Concrete Reinforcing Steel Institute (CRSI)
   a. Manual of Standard Practice – 28th Edition

1.4 SUBMITTALS

A. Shop Drawings: Submit shop drawings for reinforcing steel. Comply with ACI 315 requirements showing layout, bar schedules, stirrup spacing, diagrams of bent bars, and arrangement of reinforcing steel.

PART 2 – PRODUCTS

2.1 MATERIALS

A. Reinforcing Bars: ASTM A 615, Grade 60. Stirrups and ties shall be Grade 40.

B. Welded Wire Fabric: ASTM A 185, flat sheets

C. Steel Wire: ASTM A 82, plain, cold-drawn steel, 16 gauge.

D. Supports for Reinforcing Steel: Wire bar type and precast concrete block type meeting the requirements of CRSI Manual of Standard Practice.

2.2 FABRICATION

A. Fabricate reinforcing steel in accordance with fabricating tolerances in ACI SP-66.

B. Do not fabricate reinforcing steel until shop drawings are approved.

PART 3 – EXECUTION

3.1 PLACING BAR SUPPORTS

A. General: Provide bar supports meeting the requirements of the CRSI Specification for Placing Bar supports.

B. Slabs-on-grade: Use supports with sand plates or precast concrete blocks or horizontal runners where base material will not support chair legs.

3.2 PLACING REINFORCING STEEL

A. General: Comply with CRSI Code of Standard Practice for "Placing Reinforcing Bars".

B. Clean reinforcing steel of loose rust and mill scale, earth, ice, and other materials, which reduce or destroy bond with concrete.

C. Accurately position, support, and secure reinforcing steel against displacement by formwork, construction, or concrete placement operations. Place reinforcing steel to obtain minimum coverages. Arrange, space, and securely tie bars and bar supports to hold reinforcing steel in position during concrete placement operations. Set wire ties so ends are directed into concrete, not toward exposed concrete surfaces.

D. Concrete Cover: Provide the following cover unless noted otherwise on the Drawings:

1. Concrete cast against and permanently exposed to earth: 3 inch
2. Concrete exposed to earth or weather:
    a. Bars larger than No. 5 : 2 inch
    b. Bars No.5 or smaller: 1-1/2 inch

E. Rebar Splices: Locate at points of minimum stress or as shown on contract drawings. Unless noted otherwise, provide lap splices 30 bar diameters or 18 inches minimum length.

F. Welded Wire Fabric Splices: Lap one complete wire spacing.

G. Corner Reinforcing: Provide corner bars of same size and spacing as horizontal reinforcing steel. Lap with horizontal reinforcing 30 bar diameters or 18 inches minimum length.

H. Reinforcing at Construction/Control Joints: Continue reinforcing steel through construction joints unless noted otherwise. Discontinue reinforcing steel 2 inches from preformed construction joints in slabs-on-grade. Cut alternate longitudinal bars at weakened plane control joints in walls.

I. Do not weld reinforcing.

END OF SECTION

SECTION 03 30 00 - CAST-IN-PLACE CONCRETE

PART 1 - GENERAL

1.1 WORK INCLUDED

A. This section covers cast-in-place concrete including finishing, and curing.

1.2 RELATED WORK SPECIFIED ELSEWHERE

A. Division 03 Section "Concrete Reinforcement"
B. Division 03 Section " Concrete Paving"

1.3 QUALITY ASSURANCE

A. Reference Standards: Meet the requirements of the following codes, specifications and standards.

1. American Concrete Institute (ACI) Publications
   a. 301-10 Specifications for Structural Concrete for Buildings.
   b. 305.1-14 Specification for hot weather concreteing
   c. 306.1-90 Standard Specification for Cold Weather Concreting.
   d. 318-08 Building Code Requirements for Reinforced Concrete.

2. American Society for Testing and Materials (ASTM)
   a. C 31-15 Making and Curing Concrete Test Specimens in the Field.
   b. C 33-16 Concrete Aggregates
   c. C 39-16 Compressive Strength of Cylindrical.
   d. C 94-16 Ready-Mixed Concrete.
   e. C 143-15 Slump of Hydraulic Cement Concrete.
   f. C 150-16 Portland Cement.
   g. C 171-16 Sheet Materials for Curing Concrete.
   h. C 172-14 Sampling Freshly Mixed Concrete.
   i. C 173-16 Air Content of Freshly Mixed Concrete by the Volumetric Method.
   j. C 231-14 Air Content of Freshly Mixed Concrete by the Pressure Method.
   k. C 260-10a Air Entraining Admixtures for Concrete.
   l. C 309-11 Liquid Membrane-forming Compounds for Curing Concrete.
   m. C 494-16 Chemical Admixtures for Concrete.*
   n. C 618-15 Fly Ash and Raw or Calcined Natural Pozzolan for Use as a Mineral Admixture in Portland Cement Concrete.
   o. D 4397-16 Polyethylene Film and Sheeting.

1.4 SUBMITTALS

A. Product Data: Submit manufacturer's product data with application and installation instructions for proprietary materials and admixtures.

B. Concrete Mix Design:

1. Submit mix design in accordance with ACI-301, Chapter 3.

2. Submit with mix design results of laboratory tests performed within previous 6 months indicating aggregates from the proposed source comply with the requirements of ASTM C33.

C. Test Reports: Submit copies of test reports for concrete compressive strength, air content, temperature and slump.

PART 2 - PRODUCTS

2.1 MATERIALS

A. Portland Cement: ASTM C 150, Type I/II. Use one brand of cement throughout project.

B. Normal Weight Aggregates: ASTM C 33. Provide aggregates from a single source for exposed concrete.

C. Water: Potable.

D. Air-Entraining Admixture: ASTM C 260.

E. Water Reducing Admixture: ASTM C 494.

F. Fly-Ash: ASTM C 618, Class F.

G. Moisture-Retaining Cover: Provide waterproof paper, polyethylene film, or polyethylene-coated burlap meeting the requirements of ASTM C 171.

H. Liquid Membrane-Forming Curing Compound: Liquid type membrane-forming curing compound meeting the requirements of ASTM C 309; Type 1-D with fugitive dye for interior concrete and foundations; Type 2, white pigmented, for exposed exterior concrete except exposed exterior architectural concrete, use Type 1-D.

2.2 PROPORTIONING AND DESIGN OF MIXES

A. Prepare design mixes for each type and strength of concrete by either laboratory trial mixture or field experience methods as specified in ACI 301, Chapter 3. If trial mixture method is used, employ an independent testing facility, acceptable to Architect, for preparing and reporting proposed mix designs.

B. Submit written reports to Architect of each proposed mix for each class of concrete at least 15 days prior to start of work. Do not begin concrete production until sizes have been approved.

C. Slab-on-Grade: Proportion normal – weight concrete mix as follows:
1. Compressive Strength at 28 Days: 3000 psi
2. Maximum Slump: 4 inches

D. Admixtures:

1. Use air-entraining admixture complying with ASTM C 260.

2. Use water reducing admixtures conforming to ASTM C 494 in all concrete.

3. Calcium chloride is not permitted.

4. All admixtures, except high range water reducers, shall be added to the concrete at the plant.

PART 3 - EXECUTION

3.1 COORDINATION

A. Coordinate the installation of joint materials and moisture barriers with placement of formed and reinforcing steel. Set screeds accurately. Embedded items shall be accurately aligned and adequately supported. Verify installation of mechanical, plumbing, and electrical items to be embedded in concrete. Correct any unsatisfactory condition before proceeding further.

3.2 PREPARATION

A. Before placing concrete, clean, and roughen surface of previously placed concrete. Clean reinforcing steel. Remove debris, providing cleanouts at bottom of forms when necessary. Moisten surfaces to receive concrete unless otherwise prepared. Remove excess water before placing concrete.

3.3 CONCRETE PLACEMENT

A. General: Comply with ACI 301 and ACI 304.

B. Place concrete continuously in layers not deeper than 24 inches. Concrete shall not be placed against concrete which has hardened sufficiently to cause the formation of seams or planes of weakness. If a section cannot be placed continuously, provide construction joints. Deposit concrete as nearly as practicable to its final location to avoid segregation. Do not use vibrators to transport concrete.

C. Maintain reinforcing in proper position during concrete placement operations. All chairs, bar supports, and related material shall be plastic coated. All the wires shall be turned in.

D. Consolidate concrete, immediately after placing, by mechanical vibrating equipment supplemented by hand-spading, rodding, or tamping. Use equipment and procedures for consolidation of concrete in accordance with ACI recommended practices.

E. Bring slab surfaces to correct level with straightedge and strike off. Use bull floats or darbles to smooth surface. Do not disturb slab surfaces prior to beginning finishing operations.

F. Cold-Weather Concreting: Protect concrete work from physical damage or reduced strength caused by frost, freezing actions, or low temperatures. Comply with ACI 306.1

G. Hot-Weather Placement: When hot weather conditions exist that would impair quality and strength of concrete; do not place any concrete with internal mix temperatures in excess of 90° F. Reduce delivery time ready mix concrete to 1 hour, if concrete temperatures between 50°and

80° F, the delivery time shall not exceed 1-1/2 hours. Concrete temperatures shall be controlled by lowering the temperature of materials or the addition of retarder complying with the requirements of ASTM D 494.

H. Accurately position all embedded items and provide well consolidated concrete around embeds free of voids and honeycombs.

3.4 FINISH OF FORMED SURFACES

A. Rough Form Finish: Provide where formed concrete surfaces are not exposed to view. Tie holes and surface imperfections shall be repaired and patched and fins and other projections exceeding ¼" in height rubbed down or chipped off.

3.5 SLAB FINISHES

A. Float Finish: Begin floating when surface water has disappeared and when concrete has stiffened sufficiently to permit operation of power-driven or hand floats. Consolidate surface with power-driven floats, or by hand floating if area is small or inaccessible to power units. Check and level surface plans to a tolerance not exceeding ¼" in 10' when tested with a 10' straightedge.

B. Scratch Finish: Apply scratch finish to slab surfaces that are to receive floor topping. Roughen surface before final set, using stiff brushes, or brooms.

C. Trowel Finish: Apply trowel finish to all slab surfaces unless noted otherwise. After floating begin first trowel finish using a power driven or hand trowel. Finish concrete marks, uniform in texture and appearance, and with a surface plane tolerance not exceeding 1/8" in 10' when tested with a 10' straightedge.

3.6 CONCRETE CURING AND PROTECTION

A. General: Protect freshly placed concrete from premature drying and excessive cold or hot temperatures. Start initial curing as soon as free water has disappeared from concrete surface after placing and finishing. Continue curing for at least 7 days using one of the following methods.

B. Moisture retaining cover curing: Cover concrete surface with moisture retaining cover conforming to ASTM C 171 or D 2103 for curing concrete, placed in widest practicable width with sides and ends lapped at least 3" and sealed. Repair any holes or tears in cover during curing period.

C. Curing compound: Apply curing compound uniformly in accordance with manufacturer's printed instruction.

3.7 FIELD QUALITY CONTROL

A. The Owner shall employ the services of a qualified testing laboratory to perform tests and submit reports.

B. Sampling Fresh Concrete: ASTM C 172.

C. Slump: ASTM C 143; one test for each set of compressive strength test specimens.

D. Air Content: ASTM C 173 or C 231 for each set of compressive strength test specimens.

E. Concrete Temperature: Test hourly when air temperature is 40 degrees F. and below, when 80 degrees F. and above; and when compression test specimens are made.

F. Compression Test Specimen: ASTM C 31; one set of 5 standard cylinders for each compressive strength test, unless otherwise directed. Mold and store cylinders for laboratory cured test specimens except when filed cure test specimens are required. Mold one set of standard cylinders for volume of concrete specified below or fraction thereof.

1.	Slabs on Grade or Metal Deck	25 cubic yards
2.	Beams and Columns	8 cubic yards
3.	All other locations	25 cubic yards

G. Compressive Strength Tests: ASTM C 39; test 1 specimen at 7 days, 2 specimen at 28 days, and retain two specimen in reserve for later testing. Additional Tests: The testing laboratory will make additional tests of in-place concrete when test results indicate specified concrete strengths and other characteristics have not been attained in the structure as directed by the Architect. The testing laboratory may conduct tests to determine adequacy of concrete by cored cylinders complying with ASTM C 42 or by other methods as directed by the Architect. The Contractor shall pay for such tests conducted, and any other additional testing as may be required, when unacceptable concrete is verified.

END OF SECTION 03 30 00

SECTION 05 10 00 - STRUCTURAL STEEL FRAMING

PART 1 - GENERAL

1.1 WORK INCLUDED:

A. This section includes the fabrication and erection of structural steel.

1.2 RELATED WORK SPECIFIED ELSEWHERE

A. Division 05 Section “Cold Formed Metal Framing”

B. Division 05 Section “Metal Fabrications”.

C. Division 13 Section “Metal Buildings”

1.3 QUALITY ASSURANCE

A. Erector Qualifications: Engage an experienced erector who has completed structural steel work similar in material, design, and extent to that indicated for this Project and with a record of successful in-service performance. Erector must be a member of AISC at time of bid.

B. Fabricator Qualifications: Engage a firm experienced in fabricating structural steel similar to that indicated for this Project and with a record of successful in-service performance, as well as sufficient production capacity to fabricate structural steel without delaying the Work. Fabricator must participate in the AISC Quality Certification Program and be designated an AISC-Certified Plan, Category STD at time of bid..

C. Qualifications of Field Welders: Welders shall be certified in accordance with AWS D1.1 within the last 12 months.

D. Reference Standards

1. American Society for Testing and Materials (ASTM) Standard Specification, latest edition.
   a. A 36-91 Structural Steel.
   b. A 307-92 Carbon Steel Bolts and Studs, 60,000 PSI Tensile Strength.
   c. A 325-92 Structural Bolts, Steel, Heat Treated, 120/105 ksi Minimum Tensile Strength.
   d. A 500-90 Cold-Formed Welded and Seamless Carbon Steel Structural Tubing in Rounds and Shapes.
   e. A 53-90 Pipe, Steel, Black and Hot Dipped, Zinc Coated Welded and Seamless.

2. American Welding Society (AWS), latest edition.
   a. D1.1-92 Structural Welding Code-Steel.

3. American Institute of Steel Construction (AISC), Steel Construction Manual, latest edition.
   a. Specification for Structural Steel Buildings.
   b. AISC Code of Standard Practice.
   c. Specification for Structural Joints Using ASTM A325 or A490 Bolts.

1.4 SUBMITTALS

A. Shop Drawings: Submit shop drawings including complete details and schedules for fabrication and assembly of structural steel members. Include details of cuts, connections, camber, holes, and other pertinent data. Indicate welds by standard AWS symbols, and show size, length, and type of each weld. Shop drawings may not be made by reproduction of the contract drawings.

B. Provide setting drawings and directions for installation of anchor bolts and other anchorages to be installed by others.

C. Welder Certification: Submit affidavit stating that all welders are certified in accordance with AWS.

1.5 PRODUCT DELIVERY AND STORAGE

A. Support structural steel above ground on skids, pallets, platforms or other supports.

B. Protect steel from damage.

C. Store packaged materials in original unbroken package or container.

D. Do not store materials on structure in a manner that might cause distortion or damage to members or supporting structures.

E. Replace damaged shapes or members.

PART 2 - PRODUCTS

2.1 MATERIALS

A. Structural Steel Shapes: ASTM A 992, Grade 50.

B. Structural Steel Plates and Bars: ASTM A36.

C. Structural Steel Tubing: ASTM A500, Grade B, Fy = 46 ksi.

D. Structural Steel Pipe: ASTM A 53, Grade B, Fy = 35 ksi, Type E or S.

E. Anchor Bolts: ASTM A307 or ASTM A36.

F. High Strength Tension Control Threaded Fasteners: Meet requirements of ASTM A325.

G. Welding Electrodes: E70 Series.

H. Shop Primer Paint: Fabricators standard rust inhibitive primer.

I. Non-Metallic, Non-Shrink Grout: Meets the requirements of Corp of Engineers specifications CRD-C621 and ASTM C827.

2.2 FABRICATION

A. Fabrication shall be in accordance with AISC's "Code of Standard Practice for Steel Buildings and Bridges".

B. Connections: Weld or bolt shop connections as indicated on the approved shop drawings. Design connections to support reactions and forces where indicated on the drawings.

C. Shop Welds: Inspect in accordance with Section 6 of the AWS D1.1, Structural Welding Code.

2.3 SHOP PAINTING

A. General: Shop paint structural steel, except those members or portions of members to be embedded in concrete or mortar. Paint embedded steel which is partially exposed on exposed portions and initial 2 inch of embedded areas only.

B. Do not paint surfaces which are to be welded or high-strength bolted with friction-type connections.

C. Surface Preparation: After inspection and before shipping, clean steel work to be painted. Remove loose rust, loose mill scale, and spatter, slag or flux deposits. Clean steel in accordance with Steel Structures Painting Council (SSPC) as follows:
1. SF-1 Solvent Cleaning.
2. SP-2 Hand Tool Cleaning.

D. Painting: After surface preparation; apply structural steel primer paint in accordance with manufacturer's instructions. Provide one coat.

PART 3 - EXECUTION

3.1 COORDINATION

A. Field Measurements: Verify all elevations, locations, and dimensions of surfaces to receive structural steel.

B. Anchor Bolts and Other Embedded Items: Verify locations and positions of anchor bolts and other embedded items used to support structural steel.

C. Correct any unsatisfactory conditions prior to erection of structural steel.

3.2 PREPARATION:

A. Clean surfaces to receive structural steel prior to erection.

3.3 ERECTION

A. General: Erect structural steel in accordance with AISC "Code of Standard Practice for Steel Buildings and Bridges".

B. Field Assembly: Assemble structural steel accurately to the lines and elevations shown on the drawings. Align and adjust components accurately before fastening.

C. Temporary Bracing: Provide temporary bracing or guys to secure structural steel against wind, seismic, or construction loads. It is the responsibility of the Contractor to maintain stability of the structure during erection.

D. Field Bolted Connections: Install high strength tension control bolts in accordance with AISC Specifications for Structural Joints Using ASTM A325 and A490 Bolts and the manufacturer's instructions. Where clearance within a connection does not permit the use of tension control

bolts, standard A325 bolts shall be used and inspected in accordance with the AISC Specification for Structural Joints.

E. Field Welding: Perform all welds in accordance with AWS.

F. Inspection of Field Welds: Perform visual inspection of all field welds. If any welds appear to be unsatisfactory, they shall be tested in accordance with ASTM E160 and/or replaced at the expense of the Contractor.

G. Gas Cutting: Don not use gas cutting torches in field to cut structural framing.

H. Do not enlarge unfair holes by burning. Ream holes that must be enlarged to admit bolts.

I. Field Touch-Up Painting (Primer): Paint all bolts, washers, and nuts after connections have been tightened and checked. Paint field welds. Paint all abrasions, scratches, and scuff marks in shop coat. Use same paint as for shop painting.

3.4 QUALITY CONTROL

A. Field Connections: Inspect and test during erection of structural steel as follows:

1. Perform visual inspection and tests as required of all welds and bolted connections.

2. ‘Record types and locations of defects found in work. Record work required and performed to correct deficiencies.

3. Verity welders are certified.

END OF SECTION 05 10 00

SECTION 05 30 00 - METAL DECKING

PART 1 - GENERAL

1.1 RELATED DOCUMENTS: Drawings and general provisions of the Contract, including General and Supplementary Conditions and Division 1 Specification Sections, apply to this Section.

1.2 SUMMARY

A. This Section includes the following:

1. Steel roof deck.

B. Related Sections: The following Sections contain requirements that relate to this Section:

1. Division 03 Section "Cast-in-Place Concrete"
2. Division 05 Section "Structural Steel"
3. Division 05 Section “ Steel Joist
4. Division 09 Section "Painting"

1.3 SUBMITTALS

A. General: Submit each item in this Article according to the Conditions of the Contract and Division 01 Specification Sections. Submit two (2) copies of manufacturer's specifications and installation instructions for each type of decking and accessories. Include manufacturer's certification as may be required to show compliance with these specifications.

B. Product data for each type of deck, accessory, and product specified.

C. Shop drawings showing layout and types of deck panels, anchorage details, reinforcing channels, pans, deck openings, special jointing, accessories, and attachments to other construction.
1. Shop Drawings: Submit detailed drawings.

D. Product certificates signed by manufacturers of steel deck certifying that their products comply with specified requirements.

E. Welder certificates signed by Contractor certifying that welders comply with requirements specified under the "Quality Assurance" Article.

F. Product test reports from qualified independent testing agencies evidencing compliance with requirements of the following based on comprehensive testing:
1. Mechanical fasteners.

G. Research reports or evaluation reports of the model code organization acceptable to authorities having jurisdiction that evidence steel deck's compliance with the building code in effect for the Project.

1.4 QUALITY ASSURANCE

A. Codes and Standards: Comply with provisions of the following codes and standards, except as otherwise shown or specified:
1. AISI "Specification for the Design of Cold-Formed Steel Structural Members".
2. SDI "Design Manual for Floor Decks and Roof Decks."

B. Installer Qualifications: Engage an experienced Installer who has completed steel deck similar in material, design, and extent to that indicated for this Project and with a record of

successful in-service performance.

C. Welding Standards: Comply with applicable provisions of AWS D1.1 "Structural Welding Code--Steel" and AWS D1.3 "Structural Welding Code--Sheet Steel."
   1. Certify that each welder has satisfactorily passed AWS qualification tests for welding processes involved and, if pertinent, has undergone recertification.

D. Fire-Test-Response Characteristics: Where indicated, provide steel deck panels identical to those tested as part of an assembly for fire resistance per ASTM E 119 by a testing and inspection agency performing testing and follow-up services, that is acceptable to authorities having jurisdiction.
   1. Fire-Resistance Ratings: As indicated by design designations listed in UL "Fire Resistance Directory," or by Warnock Hersey or another testing and inspecting agency.
   2. Labeling: Identify steel deck with appropriate markings of applicable testing and inspecting agency.

E. FM Listing: Provide steel roof deck evaluated by Factory Mutual and listed in Factory Mutual "Approval Guide" for Class 1 fire rating and Class 1-90 windstorm ratings.

1.5 PERFORMANCE REQUIREMENTS:

A. Uplift Loading: Install and anchor roof deck units to resist gross uplift loading of 30 lbs. per sq. ft.

B. Compute the properties of metal roof deck sections on the basis of the effective design width as limited by the provisions of the AISI specifications. Provide not less than the deck section properties shown, including section modulus and moments of inertia per foot of width.

C. Allowable Deflection: Design and fabricate roof deck for a maximum deflection of 1/240 of the clear span under the total uniform dead and live load.

1.6 DELIVERY, STORAGE, AND HANDLING

A Protect steel deck from corrosion, deformation, and other damage during delivery, storage, and handling.

B. Stack steel deck on platforms or pallets and slope to provide drainage. Protect with a waterproof covering and ventilate to avoid condensation.

PART 2 - PRODUCTS

2.1 ROOF DECK

A Steel Roof Deck: Fabricate panels without top-flange stiffening grooves conforming to SDI Publication No. 28 "Specifications and Commentary for Steel Roof Deck" and the following:
   1. Shop-Primed Steel Sheet: ASTM A 446, Grade A, G 60 (ASTM A 446M, Grade A, Z 180) zinc coated according to ASTM A 525 (ASTM A 525M); Cleaned pretreated, and primed with manufacturer's backed-on, lead and chromate-free rust-inhibitive primer.
   2. Deck Profile: B.
   3. Profile Depth: 1-1/2 inches.
   4. Design Uncoated-Steel Thickness: 0.0295 inch, 22 gauge.

2.3 ACCESSORIES

A. General: Provide accessory materials for steel deck that comply with requirements indicated

and recommendations of the steel deck manufacturer.

B. Mechanical Fasteners: Manufacturer's standard, corrosion-resistant, low-velocity, powder-actuated or pneumatically driven carbon steel fasteners; or self-drilling, self-threading screws.

C. Side Lap Fasteners: Manufacturer's standard, corrosion-resistant, hexagonal washer head; self-drilling, carbon steel screws, No. 10 minimum diameter.

D. Rib Closure Strips: Manufacturer's standard vulcanized, closed-cell, synthetic rubber.

E. Miscellaneous Steel Shapes: ASTM A36.

F. Miscellaneous Roof Deck Accessories: Steel sheet, 0.0359-inch,(20 gauge) thick minimum ridge and valley plates, finish strips, and reinforcing channels, of same material as roof deck.

G. Steel Sheet Accessories: ASTM A 446, G 60 (ASTM A 446M, Z 180) coating class, galvanized according to ASTM A 525 (ASTM A 525M).

H. Galvanizing Repair Paint: SSPC-Paint 20 or DOD-P-21035, with dry film containing a minimum of 94 percent zinc dust by weight.

2.4 FABRICATION

A. General: Form deck units in lengths to span 3 or more supports, with flush, telescoped or nested 2" laps at ends and interlocking nested side laps, unless otherwise indicated.

B. Roof Deck Units: Provide deck configurations complying with SDI "Roof Deck Specifications", of metal thickness, depth and width as shown.

PART 3 - EXECUTION

3.1 EXAMINATION

A. Installer must examine supporting framing and field conditions for compliance with requirements for installation tolerances and other conditions affecting performance of steel deck.

B. Installer must notify Contractor in writing of conditions detrimental to proper and timely completion of work. Do not proceed with work until unsatisfactory conditions have been corrected in a manner acceptable to Installer.

3.2 PREPARATION

A. Locate decking bundles to prevent overloading of supporting members.

3.3 INSTALLATION, GENERAL

A. Install deck panels and accessories according to applicable specifications and commentary of SDI Publication No. 28, manufacturer's recommendations, and requirements of this Section.

B. Install temporary shoring before placing deck panels when required to meet deflection limitations.

C. Place deck panels on supporting framing and adjust to final position with ends accurately aligned and bearing on supporting framing before being permanently fastened. Do not stretch or contract side lap interlocks.

D. Place deck panels flat and square and fasten to supporting framing without warp or deflection.

E. Coordinate and cooperate with structural steel erector in locating decking bundles to prevent overloading of structural members.

F. Cut and neatly fit deck panels and accessories around openings and other work projecting through or adjacent to the decking.

1. Provide additional metal reinforcement and closure pieces as required for strength, continuity of decking and support of other work shown.

2. Where large predetermined openings occur, the roof deck shall be engineered by the manufacturer to fit these conditions and the openings shall be framed as shown on the structural drawings, Section D/S4 for all other openings larger than 12".

G. Provide additional reinforcement and closure pieces at openings as required for strength, continuity of decking, and support of other work.

H. Comply with AWS requirements and procedures for manual shielded metal arc welding, appearance and quality of welds, and methods used in correcting welding work.

I. Mechanical fasteners may be used in lieu of welding to fasten deck. Locate mechanical fasteners and install according to deck manufacturer's instructions.

1. Mechanically fasten with screws, powder actuated fasteners, or pneumatically driven fasteners to supports, as indicated on the shop drawings and in accordance with SDI Steel Roof Deck Design Manual requirements. Holes and similar defects will not be acceptable. Powder actuated fasteners shall be driven with low velocity piston tool by an operator authorized by the manufacturer of the piston tool. Pneumatically driven fasteners shall be driven with low velocity fastening tool and shall comply with the manufacturer's recommendations. The number and size of screws, powder actuated fasteners, or pneumatically driven fasteners shall provide at least an equivalent shear capacity of the welds specified below. Manufacturer information must be submitted for non-welded attachments.

3.4 ROOF DECK INSTALLATION

A. Fasten roof deck panels to steel supporting members by arc spot (puddle) welds of the surface diameter indicated or arc seam welds with an equal perimeter, but not less than 1-1/2 inches long, and as follows:

1. Weld Diameter: 5/8 inch, nominal.
2. Weld Spacing: Weld edge ribs of panels at each support. Space welds an average of 12 inches o.c. apart, with a minimum of five welds per unit at each support.

B. Side Lap and Perimeter Edge Fastening: Fasten side laps and perimeter edges of panels between supports, at intervals not exceeding 12 inches o.c., using the following methods:

1. Mechanically fasten side laps with self-drilling No. 12 or larger carbon steel screws.
2. Fasten perimeter edge with 5/8" nominal welds.

C. End Bearing: Install deck ends over supporting framing with a minimum end bearing of 1-1/2 inches, with end joints as follows:

1. End Joints: Lapped 2 inches minimum.

D. Miscellaneous Roof Deck Accessories: Install ridge and valley plates, finish strips, cover

plates, end closures, and reinforcing channels according to deck manufacturer's recommendations. Weld to substrate to provide a complete deck installation.

E. Flexible Closure Strips: Install flexible closure strips over partitions, walls, and where indicated. Install with adhesive according to manufacturer's instructions to ensure complete closure.

F. Closure Strips: Provide metal closure strips at open uncovered ends and edges of roof decking and in voids between decking and other construction. Weld into position to provide a complete decking installation.

3.5 FIELD QUALITY CONTROL

A. Field welds will be subject to inspection.

B. Testing agency will report test results promptly and in writing to Contractor and Architect.

C. Remove and replace work that does not comply with specified requirements.

D. Additional testing will be performed at the Contractor's expense to determine compliance of corrected work with specified requirements.

3.6 REPAIRS AND PROTECTION

A. Galvanizing Repairs: Prepare and repair damaged galvanized coatings on both surfaces with galvanized repair paint according to ASTM A 780 and the manufacturer's instructions.

B. Touch up Painting: Wire brush, clean, and paint scarred areas, welds, and rust spots on both surfaces of installed deck panels.

1. Touch up painted surfaces with same type of shop paint used on adjacent surfaces.
2. Where shop-painted surfaces are exposed in-service, apply touch up paint to blend into adjacent surfaces.

C. Provide final protection and maintain conditions to ensure steel decking is without damage or deterioration at time of Substantial Completion.

END OF SECTION

SECTION 05 40 00 – COLD-FORMED METAL FRAMING

PART 1 - GENERAL

1.1 WORK INCLUDED

A. This section includes all light gage studs, joists and track, 20 gauge or heavier, including bridging, and related accessories as indicated on the Contract Drawings and specified herein.

B. Exterior Zee Framing 16 GA. for continuous insulation and attachment of Metal Wall Panels

1.2 RELATED WORK SPECIFIED ELSEWHERE

A. Division 05 Section “Structural Steel Framing”

B. Division 05 Section “ Steel Joist”

C. Division 09 Section “Non-Structural Metal Framing.

D. Division 13 Section” Metal Buildings”

1.3 QUALITY ASSURANCE

A. Welding: Qualify procedures and personnel according to AWS D1.1/D1.1M, "Structural Welding Code--Steel," and AWS D1.3, "Structural Welding Code--Sheet Steel."

B. AISI Specifications and Standards: Comply with AISI's "North American Specification for the Design of Cold-Formed Steel Structural Members" and its "Standard for Cold-Formed Steel Framing - General Provisions."

C. American Society of Testing and Materials (ASTM) Current editions.
   1. A 446-89, Steel Sheet, Zinc-Coated (Galvanized) by the Hot-Dip Process, Structural (Physical) Quality.
   2. A 570-92, Steel, Sheet and Strip, Carbon, Hot Rolled, Structural Quality.
   3. A 611-92, Steel, Sheet, Carbon, Cold Rolled, Structural Quality.

1.4 SUBMITTALS

A. Submit manufacturer's product information and installation instructions for each item of light gage framing. Submit shop drawings for all prefabricated light gage systems.

1.5 PRODUCT DELIVERY, STORAGE, AND HANDLING

A. Protect cold-formed metal framing from corrosion, deformation, and other damage during delivery, storage, and handling. Deliver to project site in manufacturer's unopened containers or bundles, fully identified with name, brand, type, and grade. Store off ground in a dry ventilated space or protect with suitable waterproof coverings.

PART 2 - PRODUCTS

2.1 MATERIALS

A. Metal Framing
   1. Painted Material – ASTM A570, Grade 50
   2. Galvanized Material – ASTM A446, Grade D

B. Material Finishes: All stud and joist components shall be primed with paint meeting the performance requirements of TT-P-1636C.

2.2 FABRICATION

A. Framing components may be prefabricated into panels prior to erection. Prefabricated panels shall be square, with components attached to prevent racking. Handling and lifting of panels shall be done in a manner as to not cause distortion in any member.

B. All framing components shall be cut squarely for attachment to perpendicular members, or as required for an angular fit against abutting members. Members shall be held positively in place until properly fastened.

PART 3 - EXECUTION

3.1 INSTALLATION

A. Install metal framing systems in accordance with manufacturer's printed instructions and recommendations, unless otherwise indicated on Contract Documents.

B. Install and align tracks accurately to layout at base on tops of studs. Secure tracks as indicated on Contract Documents. Provide fasteners at corners and ends of tracks.

C. Install supplementary framing, blocking, and bracing in metal framing system to support fixtures, equipment, etc. Comply with stud manufacturer's recommendations and industry standards, considering weight and loading of each item.

D. Secure studs to top and bottom tracks by welding at both inside and outside flanges unless noted otherwise.

E. Frame wall openings larger than 2'-0" square with double studs at each jamb of frame except where more than two are either shown or indicated in manufacturer's instructions. Install tracks and jack studs above and below wall openings. Anchor tracks to jamb studs with stud shoes or by welding, and space jack studs same as full-height studs of wall. Secure stud system wall opening frame in manner indicated.

F. Install horizontal bridging in stud system, spaced (vertical distance) at no more than 3'-4" OC. Weld at each intersection.

END OF SECTION 05 40 00

SECTION 05 50 00 - METAL FABRICATIONS

PART 1 - GENERAL

1.1 RELATED DOCUMENTS

A. Drawings and general provisions of the Contract, including General and Supplementary Conditions and Division 01 Specification Sections, apply to this Section.

1.2 SUMMARY

A. Section Includes:
1. Steel framing and supports for mechanical and electrical equipment.
2. Steel framing and supports for applications where framing and supports are not specified in other Sections.
3. Metal bollards for protection of buildings and equipment.
4. Stainless steel corner guards for wall protection, typical at all outside corners.
5. Pre-manufactured Aluminum Access Ladders

B. Products furnished, but not installed, under this Section include the following:

1. Anchor bolts, steel pipe sleeves, and wedge-type inserts indicated to be cast into concrete or built into unit masonry.

C. Related Sections include the following:

1. Division 03 Section “Cast-in-Place Concrete” for installing anchor bolts, steel pipe sleeves, wedge-type inserts, embed plates and other items indicated to be cast into concrete.

1.3 PERFORMANCE REQUIREMENTS

A. Structural Performance of Ladders: Provide ladders capable of withstanding the effects of loads and stresses within limits and under conditions specified in ANSI A14.3.

B. Thermal Movements: Provide exterior metal fabrications that allow for thermal movements resulting from the following maximum change (range) in ambient and surface temperatures by preventing buckling, opening of joints, overstressing of components, failure of connections, and other detrimental effects. Base engineering calculation on surface temperatures of materials due to both solar heat gain and nighttime-sky heat loss.

1. Temperature Change (Range): 120 deg F (67 deg C), ambient; 180 deg F (100 deg C), material surfaces.

1.4 SUBMITTALS

A. Product Data: For the following:
1. Premanufactured items.

B. Shop Drawings: Show fabrication and installation details for metal fabrications.

1. Include plans, elevations, sections, and details of metal fabrications and their connections. Show anchorage and accessory items.
2. Provide templates for anchors and bolts specified for installation under other Sections.

1.5 QUALITY ASSURANCE

A. Welding: Qualify procedures and personnel according to the following:

1. AWS D1.1, "Structural Welding Code - - Steel."
2. AWS D1.3, “Structural Welding Code - - Sheet Steel.”
3. AWS D1.6, "Structural Welding Code - - Stainless Steel."

1.6 PROJECT CONDITIONS

A. Field Measurements: Verify actual locations of walls and other construction contiguous with metal fabrications by field measurements before fabrication and indicate measurements on Shop Drawings.

1. Established Dimensions: Where field measurements cannot be made without delaying the Work, establish dimensions and proceed with fabricating metal fabrications without field measurements. Coordinate wall and other contiguous construction to ensure that actual dimensions correspond to established dimensions.
2. Provide allowance for trimming and fitting at site.

1.7 COORDINATION

A. Coordinate installation of anchorages for metal fabrications. Furnish setting drawings, templates, and directions for installing anchorages, including sleeves, concrete inserts, anchor bolts, and items with integral anchors, that are to be embedded n concrete or masonry. Deliver such items to Project site in time for installation.

B. Coordinate installation of steel weld plates and angels for casting into concrete that are specified in this Section but required for work of another Section. Deliver such items to Project site in time for installation.

PART 2 - PRODUCTS

2.1 METALS, GENERAL

A. Metal Surfaces, General: Provide materials with smooth, flat surfaces, unless otherwise indicated. For metal fabrications exposed to view in the completed Work, provide materials without seam marks, roller marks, rolled trade names, or blemishes.

2.2 FERROUS METALS

A. Recycled Content of Steel Products: Provide products with an average recycled content of steel products so postconsumer recycled content plus one-half of preconsumer recycled content is not less than 25 percent.

B. Steel Plates, Shapes, and Bars: ASTM A 36/A 36M.

C. Stainless-Steel Sheet, Strip, Plate, and Flat Bars: ASTM A 666, Type 304.

1. Interior Corner Guards: 18 Gauge x 48” long unless otherwise noted.
2. Exterior Corner Guards: 14 Gauge x as indicated on drawings.

D. Stainless-Steel Bars and Shapes: ASTM A 276, Type 304.

E. Rolled-Steel Floor Plate: ASTM A 786/A 786M, rolled from plate complying with ASTM A 36/A 36M or ASTM A 283/A 283M, Grade C or D.

F. Rolled-Stainless-Steel Floor Plate: ASTM A 793.

G. Steel Tubing: ASTM A 500, cold-formed steel tubing.

H. Steel Pipe: ASTM A 53/A 53M, standard weight (Schedule 40) unless another weight is indicated or required by structural loads.

I. Slotted Channel Framing: Cold-formed metal box channels with continuous slot complying with MFMA-3.

1. Size of Channels: 1-5/8 by 1-5/8 inches (41 by 41 mm).
2. Material: Galvanized steel complying with ASTM A 653/A 653M, commercial steel, Type B, with G90 (Z275) coating; 0.108-inch (2.8-mm**)** nominal thickness.
3. Material: Steel complying with ASTM A 1008/A 1008M, commercial steel, Type B minimum thickness; coated with rust-inhibitive, baked-on acrylic enamel.

J. Cast Iron: ASTM A 48/A 48M, Class 30, unless another class is indicated or required by structural loads.

2.3 FASTENERS

A. General: Unless otherwise indicated, provide Type 304 stainless-steel fasteners for exterior use and zinc-plated fasteners with coating complying with ASTM B 633Class Fe/Zn 5, at exterior walls. Provide stainless-steel fasteners for fastening aluminum. Select fasteners for type, grade, and class required.

B. Steel Bolts and Nuts: Regular hexagon-head bolts, ASTM A 307, Grade A (ASTM F 568M, Property Class 4.6); with hex nuts, ASTM A 563 (ASTM A 563M); and, where indicated, flat washers.

C. Stainless-Steel Bolts and Nuts: Regular hexagon-head annealed stainless-steel bolts, nuts and, where indicated, flat washers; ASTM F 593 (ASTM F 738M) for bolts and ASTM F 594 (ASTM F 836M) for nuts, Alloy Group 1 (A1).

D. Anchor Bolts: ASTM F 1554, Grade 36.

1. Hot-dip or mechanically deposited, zinc-coated anchor bolts where item being fastened is indicated to be galvanized.

E. Eyebolts: ASTM A 489.

F. Machine Screws: ASME B18.6.3 (ASME B18.6.7M).

G. Lag Bolts: ASME B18.2.1 (ASME B18.2.3.8M).

H. Wood Screws: Flat head, ASME B18.6.1.

I. Plain Washers: Round, ASME B18.22.1 (ASME B18.22M).

J. Lock Washers: Helical, spring type, ASME B18.21.1 (ASME B18.21.2M).

K. Cast-in-Place Anchors in Concrete: Anchors capable of sustaining, without failure, a load equal to four times the load imposed, as determined by testing according to ASTM E 488, conducted by a qualified independent testing agency.

1. Threaded or wedge type; galvanized ferrous castings, either ASTM A 47/A 47 M malleable iron or ASTM A 27/A 27 M cast steel. Provide bolts, washers, and shims as needed, hot-dip galvanized per ASTM A 153/A 153 M.

L. Expansion Anchors: Anchor bolt and sleeve assembly with capability to sustain, without failure, a load equal to six times the load imposed when installed in unit masonry and four times the load imposed when installed in concrete, as determined by testing according to ASTM E 488, conducted by a qualified independent testing agency.

1. Material for Anchors in Interior Locations: Carbon-steel components zinc-plated to comply with ASTM B 633, Class Fe/Zn 5.
2. Material for Anchors in Exterior Locations: Alloy Group 1 (A1) stainless-steel bolts complying with ASTM F 593 (ASTM F 738M) and nuts complying with ASTM F 594 (ASTM F 836M).

2.4 MISCELLANEOUS MATERIALS

A. Welding Rods and Bare Electrodes: Select according to AWS specifications for metal alloy welded.

B. Shop Primers: Provide primers that comply with Division 09 painting Sections.

C. Universal Shop Primer: Fast-curing, lead- and chromate-free, universal modified-alkyd primer complying with MPI#79.

1. Use primer with a VOC content of 420 g/L (3.5lb/gal.) or less when calculated according to 40 CFR 59, Subpart D (EPA Method 24).
2. Use primer containing pigments that make it easily distinguishable from zinc-rich primer.

D. Zinc-Rich Primer: Complying with SSPC-Paint 20 or SSPC-Paint 29 and compatible with topcoat.

1. Use primer with a VOC content of 420 g/L (3.5lb/gal.) or less when calculated according to 40 CFR 59, Subpart D (EPA Method 24).
2. Available Products:
   a. Benjamin Moore & Co.; Epoxy Zinc-Rich Primer CM 18/19.
   b. Carboline Company; Carbozinc 621.
   c. ICI Devoe Coatings; Catha-Coat 313.
   d. PPG Architectural Finishes, Inc.; Aquapon Zinc-Rich Primer 97-670.
   e. Sherwin-Williams Company (The); Corothane I GalvaPac Zinc Primer.
   f. Tnemec Company, Inc.; Tneme-Zinc 90-97.
   g. Approved equals.

E. Galvanizing Repair Paint: High-zinc-dust-content paint for regalvanizing welds in steel, complying with SSPC-Paint 20.

F. Bituminous Paint: Cold-applied asphalt emulsion complying with ASTM D 1187.

G. Nonshrink, Metallic Grout: Factory-packaged, ferrous-aggregate grout complying with ASTM C 1107, specifically recommended by manufacturer for heavy-duty loading applications.

H. Concrete Materials and Properties: Comply with requirements in Division 03 Section "Cast-in-Place Concrete" for normal-weight, air-entrained, ready-mix concrete with a minimum 28-day compressive strength of 3000 psi (20 MPa), unless otherwise indicated.

2.5 FABRICATION, GENERAL

A. Shop Assembly: Preassemble items in the shop to greatest extent possible. Disassemble units only as necessary for shipping and handling limitations. Use connections that maintain structural value of joined pieces. Clearly mark units for reassembly and coordinated installation.

B. Cut, drill, and punch metals cleanly and accurately. Remove burrs and ease edges to a radius of approximately 1/32 inch (1 mm) unless otherwise indicated. Remove sharp or rough areas on exposed surfaces.

C. Form bent-metal corners to smallest radius possible without causing grain separation or otherwise impairing work.

D. Form exposed work true to line and level with accurate angles and surfaces and straight edges.

E. Weld corners and seams continuously to comply with the following:

1. Use materials and methods that minimize distortion and develop strength and corrosion resistance of base metals.
2. Obtain fusion without undercut or overlap.
3. Remove welding flux immediately.
4. At exposed connections, finish exposed welds and surfaces smooth and blended so no roughness shows after finishing and contour of welded surface matches that of adjacent surface.

F. Form exposed connections with hairline joints, flush and smooth, using concealed fasteners where possible. Where exposed fasteners are required, use Phillips flat-head (countersunk) screws or bolts, unless otherwise indicated. Locate joints where least conspicuous.

G. Fabricate seams and other connections that will be exposed to weather in a manner to exclude water. Provide weep holes where water may accumulate.

H. Cut, reinforce, drill, and tap metal fabrications as indicated to receive finish hardware, screws, and similar items.

I. Provide for anchorage of type indicated; coordinate with supporting structure. Space anchoring devices to secure metal fabrications rigidly in place and to support indicated loads.

1. Where units are indicated to be cast into concrete or built into masonry, equip with integrally welded steel strap anchors, 1/8 by 1-1/2 inches (3.2 by 38 mm), with a minimum 6-inch (150-mm) embedment and 2-inch (50-mm) hook, not less than 8 inches (200 mm) from ends and corners of units and 24 inches (600 mm) o.c., unless otherwise indicated.

2.6 METAL BOLLARDS

A. Fabricated metal protection bollards from Schedule 40 steel pipe.

B. Fabricate internal sleeves for removable bollards from Schedule 40 steel pipe or ¼ inch (6.4-mm) wall-thickness steel tubing with an OD approximately 1/16 inch (1.5 mm) less than ID or bollards. Match drill sleeve and bollards for ¾ inch (19 mm) steel machine bolt.

2.7 METAL ACCESS LADDERS

A. Provide metal ladders where indicated. Fabricated of open-type construction with channel or plate stringers and pipe and tube railings unless otherwise indicated. Provide brackets and fittings for a complete installation.
   1. Fabricate ladders including railings from aluminum.
   2. Fabricate rungs from extruded-aluminum.
   3. Available Products:
      a. O'Keefe, Inc.
         1) Basis of Design: Model 501 for access to roof hatch.
         2) Basis of Design: Model 503 for access over roof parapet.
         3) Basis of Design: Model 504 for access to Workshop Mezzanine.
      b. Precision Ladders, LLC.
      c. Approved Equals.

2.8 FINISHES, GENERAL

A. Comply with NAAMM's "Metal Finishes Manual for Architectural and Metal Products" for recommendations for applying and designating finishes.

B. Finish metal fabrications after assembly.

2.9 STEEL AND IRON FINSIHES

A. Galvanizing: Hot-dip galvanize items as indicated to comply with applicable standard listed below:

   1. ASTM A 123/A 123M, for galvanizing steel and iron products.
   2. ASTM A 153/A 153M, for galvanizing steel and iron hardware.

B. Preparation for Shop Priming: Prepare uncoated ferrous-metal surfaces to comply with minimum requirements indicated below for SSPC surface preparation specifications and environmental exposure conditions of installed metal fabrications:

   1. Exteriors (SSPC Zone 1B): SSPC-SP 6/NACE No. 3, "Commercial Blast Cleaning."
   2. Interiors (SSPC Zone 1A): SSPC-SP 3, "Power Tool Cleaning."

C. Shop Priming: Apply shop primer to uncoated surfaces of metal fabrications, except those with galvanized finishes and those to be embedded in concrete, sprayed-on fireproofing, or masonry, unless otherwise indicated. Comply with SSPC-PA 1, "Paint Application Specification No 1: Shop, Field, and Maintenance Painting of Steel," for shop painting.

   1. Stripe paint corners, crevices, bolts, welds, and sharp edges.

PART 3 - EXECUTION

3.1 INSTALLATION, GENERAL

A. Cutting, Fitting, and Placement: Perform cutting, drilling, and fitting required for installing metal fabrications. Set metal fabrications accurately in location, alignment, and elevation; with edges and surfaces level, plumb, true, and free of rack; and measured from established lines and levels.

B. Fit exposed connections accurately together to form hairline joints. Weld connections that are not to be left as exposed joints but cannot be shop welded because of shipping size limitations. Do not weld, cut, or abrade surfaces of exterior units that have been hot-dip galvanized after fabrication and are for bolted or screwed field connections.

C. Field Welding: Comply with the following requirements:

1. Use materials and methods that minimize distortion and develop strength and corrosion resistance of base metals.
2. Obtain fusion without undercut or overlap.
3. Remove welding flux immediately.
4. At exposed connections, finish exposed welds and surfaces smooth and blended so no roughness shows after finishing and contour of welded surface matches that of adjacent surface.

D. Fastening to In-Place Construction: Provide anchorage devices and fasteners where metal fabrications are required to be fastened to in-place construction. Provide threaded fasteners for use with concrete and masonry inserts, toggle bolts, through bolts, lag screws, wood screws, and other connectors.

E. Provide temporary bracing or anchors in formwork for items that are to be built into concrete, masonry, or similar construction.

F. Corrosion Protection: Coat concealed surfaces of aluminum that will come into contact with grout, concrete, masonry, wood, or dissimilar metals with a heavy coat of bituminous paint.

3.2 INSTALLING METAL BOLLARDS

A. Anchor protection bollards in place with concrete footings. Center and align bollards in holes 3 inches (75 mm) above bottom of excavation. Place concrete and vibrate or tamp for consolidation. Support and brace bollards in position until concrete has cured.

B. Anchor internal sleeves for removable bollards in place with concrete footings. Center and align sleeves in holes 3 inches (75mm) above bottom of excavation. Place concrete and vibrate or tramp for consolidation. Support and brace sleeves in position until concrete has cured.

C. Place removable bollards over internal sleeves and secure with 3/4 inch (19 mm) machine bolts and nuts. After tightening nuts, drill holes n bolts for inserting padlocks. Owner will furnish padlocks.

D. Fill protection bollards solidly with concrete, mounding top surface to shed water.

1. Do not fill removable bollards with concrete.

3.3 INSTALLING ACCESS LADDERS

A. Provide concealed blocking for attachment

B. Comply with Manufacturer's instructions

3.4 ADJUSTING AND CLEANING

A. Touchup Painting: Immediately after erection, clean field welds, bolted connections, and abraded areas. Paint uncoated and abraded areas with the same material as used for shop painting to comply with SSPC-PA 1 for touching up shop-painted surfaces.

1. Apply by brush or spray to provide a minimum 2.0-mil (0.05-mm) dry film thickness.

E. Galvanized Surfaces: Clean field welds, bolted connections, and abraded areas and repair galvanizing to comply with ASTM A 780.

END OF SECTION 05 50 00

SECTION 05 52 13 - PIPE AND TUBE RAILINGS

PART 1 - GENERAL

1.1 RELATED DOCUMENTS: Drawings and general provisions of the Contract, including General and Supplementary Conditions and Division 01 Specification Sections, apply to this Section.

1.2 SUMMARY

A. This Section includes the following: Premanufactured steel pipe and tube railing systems and access gates.

B. Related Sections include the following:

1. Division 05 Section “Cold Formed Metal Framing”
2. Division 05 Section “Miscellaneous Metal”

1.3 PERFORMANCE REQUIREMENTS

A. General: In engineering handrails and railings to withstand structural loads indicated, determine allowable design working stresses of handrail and railing materials based on the following:

1. Structural Steel: AISC S335, "Specification for Structural Steel Buildings Allowable Stress Design and Plastic Design with Commentary."
2. Cold-Formed Structural Steel: AISI SG-673, Part I, "Spec for the Design of Cold-Formed Steel Structural Members."

B. Structural Performance of Handrails and Railings: Provide handrails and railings capable of withstanding the following structural loads without exceeding allowable design working stresses of materials for handrails, railings, anchors, and connections:

1. Top Rail of Guards: Capable of withstanding the following loads applied as indicated:
   a. Concentrated load of 200 lbf (890 N) applied at any point and in any direction.
   b. Uniform load of 50 lbf/ft. (730 N/m) applied horizontally and concurrently with uniform load of 100 lbf/ft. (1460 N/m) applied vertically downward.
   c. Concentrated and uniform loads above need not be assumed to act concurrently.
2. Infill Area of Guards: Capable of withstanding a horizontal concentrated load of 200 lbf (890 N) applied to 1 sq. ft. (0.09 sq. m) at any point in system, including panels, intermediate rails, balusters, or other elements composing infill area.
   a. Load above need not be assumed to act concurrently with loads on top rails in determining stress on guard.

C. Thermal Movements: Provide handrails and railings that allow for thermal movements resulting from the following maximum change (range) in ambient and surface temperatures by preventing buckling, opening of joints, overstressing of components, failure of connections, and other detrimental effects. Base engineering calculation on surface temperatures of materials due to both solar heat gain and nighttime-sky heat loss.
1. Temperature Change (Range): 120 deg F, ambient; 180 deg F, material surfaces.

D. Control of Corrosion: Prevent galvanic action and other forms of corrosion by insulating metals and other materials from direct contact with incompatible materials.

1.4 SUBMITTALS

A. Product Data: For the following:

1. Manufacturer's product lines of mechanically connected handrails and railings.

B. Shop Drawings: Show fabrication and installation of handrails and railings. Include plans, elevations, sections, component details, and attachments to other Work.

1. For installed railings indicated to comply with design loads, include structural analysis data signed and sealed by the qualified professional engineer responsible for their preparation.

1.5 QUALITY ASSURANCE

A. Professional Engineer Qualifications: A professional engineer who is legally qualified to practice in jurisdiction where Project is located & who is experienced in providing engineering services of the kind indicated. Engineering services are defined as those performed for installations of hand-rails and railings that are similar to those indicated for this Project in material, design, and extent.

1.7 PROJECT CONDITIONS: Field Measurements - Verify handrail and railing dimensions by field measurements before fabrication and indicate measurements on Shop Drawings. Coordinate fabrication schedule with construction progress to avoid delaying the Work.

1.8 COORDINATION: Coordinate installation of anchorages for railings. Furnish setting drawings, templates, and directions for installing anchorages, including sleeves, concrete inserts, anchor bolts, and items with integral anchors, that are to be embedded in concrete or masonry. Deliver such items to Project site in time for installation.

PART 2 - PRODUCTS

2.1 MANUFACTURERS

A. Available Manufacturers: Subject to compliance with requirements, manufacturers offering products that may be incorporated into the Work include, but not limited to, the following:

1. Steel Pipe and Tube Railings, fittings, and brackets:
   a. Schmidt Structural Products
   b. Wildeck Inc.
   c. Approved Equals

2.2 SYSTEM DESCRIPTION

A. Pre-manufactured guardrail system, three rail with toe board, for mounting to face of mezzanine structure. Swing Gates providing a six foot openings as indicated on drawings. Provide Cane Bolts to secure Gate sections

2.3 METALS

A. General: Provide metal free from pitting, seam marks, roller marks, stains, discolorations, and other imperfections where exposed to view on finished units.

B. Steel and Iron: Provide steel and iron in the form indicated, complying with the following requirements:

1. Steel Pipe: ASTM A 53; finish, type, and weight class as follows:
   a. Galvanized finish for exterior installations and where indicated.
   b. Type F, or Type S, Grade A, standard weight (Schedule 40), unless another Grade and weight are required by structural loads.
2. Steel Tubing: Cold-formed steel tubing, ASTM A 500, Grade A, unless another grade is required by structural loads.
3. Steel Plates, Shapes, and Bars: ASTM A 36/A 36M.
4. Iron Castings: Malleable iron complying with ASTM A 47, Grade 32510 (ASTM A 47M, Grade 22010).

C. Brackets, Flanges, and Anchors: Cast or formed metal of same type of material and finish as supported rails, unless otherwise indicated.

2.3 WELDING MATERIALS, FASTENERS, AND ANCHORS

A. Welding Electrodes and Filler Metal: Provide type and alloy of filler metal and electrodes as recommended by producer of metal to be welded and as required for color match, strength, and compatibility in fabricated items.

B. Fasteners for Anchoring Handrails and Railings to Other Construction: Select fasteners of type, grade, and class required to produce connections suitable for anchoring handrails and railings to other types of construction indicated and capable of withstanding design loads.

C. Fasteners for Interconnecting Handrail and Railing Components: Use fasteners fabricated from same basic metal as fastened metal, unless otherwise indicated. Do not use metals that are corrosive or incompatible with materials joined.

1. Provide concealed fasteners for interconnecting handrail and railing components and for attaching them to other work, unless otherwise indicated.

2.4 PAINT

A. Shop Primers: Provide primers to comply with applicable requirements in Division 9 Section "Painting."

B. Shop Primer for Ferrous Metal: Fast-curing, lead- and chromate-free, universal modified-alkyd primer complying with performance requirements in FS TT-P-664; selected for good resistance to normal atmospheric corrosion, compatibility with finish paint systems indicated, and capability to provide a sound foundation for field-applied topcoats despite prolonged exposure.

C. Shop Primer for Galvanized Steel: Zinc-dust, zinc-oxide primer formulated for priming zinc-coated steel and for compatibility with finish paint systems indicated. comply with SSPC-Paint 5.

D. Bituminous Paint: Cold-applied asphalt mastic complying with SSPC-Paint 12, except containing no asbestos fibers, or cold-applied asphalt emulsion complying with ASTM D 1187.

2.6 FABRICATION

B. General: Fabricate handrails and railings to comply with requirements indicated for design, dimensions, member sizes and spacing, details, finish, and anchorage, but not less than that required to support structural loads.

C. Assemble handrails and railings in the shop to greatest extent possible to minimize field splicing

and assembly. Disassemble units only as necessary for shipping and handling limitations. Clearly mark units for reassembly and coordinated installation. Use connections that maintain structural value of joined pieces.

D. Form changes in direction of railing members as follows:
   1. As detailed.
   2. By radius bends of radius indicated.
   3. By inserting prefabricated flush-elbow fittings.
   4. By any method indicated above, applicable to change in direction involved.

E. Form simple and compound curves by bending members in jigs to produce uniform curvature for each repetitive configuration required; maintain cylindrical cross section of member throughout entire bend without buckling, twisting, cracking, or otherwise deforming exposed surfaces of handrail and railing components.

E Welded Connections: Fabricate handrails and railings for connecting members by welding. Cope components at perpendicular and skew connections to provide close fit, or use fittings designed for this purpose. Weld connections continuously to comply with the following:
   1. Use materials and methods that minimize distortion and develop strength and corrosion resistance of base metals.
   2. Obtain fusion without undercut or overlap.
   3. Remove flux immediately.
   4. At exposed connections, finish exposed surfaces smooth and blended so no roughness shows after finishing and welded surface matches contours of adjoining surfaces.

F. Brackets, Flanges, Fittings, and Anchors: Provide wall brackets, flanges, miscellaneous fittings, and anchors to interconnect handrail & railing members to other work, unless otherwise indicated.

G. Provide inserts and other anchorage devices for connecting handrails and railings to concrete or masonry work. Fabricate anchorage devices capable of withstanding loads imposed by handrails and railings. Coordinate anchorage devices with supporting structure.

H. For railing posts set in concrete, provide preset sleeves of steel not less than 6 inches long with inside dimensions not less than 1/2 inch greater than outside dimensions of post, and steel plate forming bottom closure.

I. For removable railing posts, fabricate slip-fit sockets from steel tube whose ID is sized for a close fit with posts; limit movement of post without lateral load, measured at top, to not more than one-fortieth of post height. Provide socket covers designed and fabricated to resist being dislodged.

   1. Provide chain with eye, snap hook, and staple across gaps formed by removable railing sections at locations indicated. Fabricate from same metal as railings.

J. Shear and punch metals cleanly and accurately. Remove burrs from exposed cut edges.

K. Ease exposed edges to a radius of approximately 1/32 inch (1 mm), unless otherwise indicated. Form bent-metal corners to smallest radius possible without causing grain separation or otherwise impairing the Work.

L. Cut, reinforce, drill, and tap components, as indicated, to receive finish hardware, screws, and similar items.

M. Provide weep holes or another means to drain entrapped water in hollow sections of handrail and railing members that are exposed to exterior or to moisture from condensation or other sources.

N. Fabricate joints that will be exposed to weather in a watertight manner.

O. Close exposed ends of handrail and railing members with prefabricated end fittings.

2.6 FINISHES, GENERAL

A. Comply with NAAMM's "Metal Finishes Manual for Architectural and Metal Products" for recommendations for applying and designating finishes.

2.7 STEEL FINISHES

A. For galvanized handrails and railings, provide galvanized fittings, brackets, fasteners, sleeves, and other ferrous components.

B. Preparation for Shop Priming: Prepare uncoated ferrous-metal surfaces to comply with minimum requirements indicated below for SSPC surface-preparation specifications and environmental exposure conditions of installed handrails and railings:

1. Exteriors (SSPC Zone 1B): SSPC-SP 6, "Commercial Blast Cleaning."
2. Interiors (SSPC Zone 1A): SSPC-SP 7, "Brush-off Blast Cleaning."

C. Apply shop primer to prepared surfaces of handrail and railing components, unless otherwise indicated. Comply with requirements in SSPC-PA 1, "Paint Application Specification No. 1," for shop painting. Primer need not be applied to surfaces to be embedded in concrete or masonry.

1. Stripe paint edges, corners, crevices, bolts, and welds.

PART 3 - EXECUTION

3.1 EXAMINATION: Examine plaster and gypsum board assemblies, where reinforced to receive anchors, to verify that locations of concealed reinforcements have been clearly marked for Installer. Locate reinforcements and mark locations if not already done.

3.2 INSTALLATION, GENERAL

A. Fit exposed connections together to form tight, hairline joints.

B. Perform cutting, drilling, and fitting required to install handrails and railings. Set handrails and railings accurately in location, alignment, and elevation; measured from established lines and levels and free from rack.

1. Do not weld, cut, or abrade surfaces of handrail and railing components that have been coated or finished after fabrication and that are intended for field connection by mechanical or other means without further cutting or fitting.
2. Set posts plumb within a tolerance of 1/16 inch in 3 feet.
3. Align rails so variations from level for horizontal members and from parallel with rake of steps and ramps for sloping members do not exceed 1/4 inch in 12 feet.

   a. Adjust handrails and railings before anchoring to ensure matching alignment at abutting joints. Space posts at interval indicated, but not less than that required by structural loads.

   b. Fastening to In-Place Construction: Use anchorage devices and fasteners where necessary for securing handrails and railings and for properly transferring loads to in-place construction.

3.3 RAILING CONNECTIONS

A. Welded Connections: Use fully welded joints for permanently connecting railing components. Comply with requirements for welded connections in "Fabrication" Article whether welding is performed in the shop or in the field.

B. Expansion Joints: Install expansion joints at locations indicated but not farther apart than required to accommodate thermal movement. Provide slip-joint internal sleeve extending 2 inches beyond joint on either side, fasten internal sleeve securely to one side, and locate joint within 6 inches of post.

3.4 ANCHORING POSTS

A. Form or core-drill holes not less than 5 inches (125 mm) deep and 3/4 inch (20 mm) larger than OD of post for installing posts in concrete. Clean holes of loose material, insert posts, and fill annular space between post and concrete with the following anchoring material, mixed and placed to comply with anchoring material manufacturer's written instructions:

B. Nonshrink, nonmetallic grout or anchoring cement.

C. Welded to post after placing anchoring material.

D. At exterior railings, set into concrete. Leave anchorage joint exposed; wipe off surplus anchoring material; and leave 1/8-inch build-up, sloped away from post.

3.5 CLEANING

A. Touchup Painting: Immediately after erection, clean field welds, bolted connections, and abraded areas of shop paint, and paint exposed areas with same material.

B. Galvanized Surfaces: Clean field welds, bolted connections, and abraded areas and repair galvanizing to comply with ASTM A 780.

3.6 PROTECTION

Restore finishes damaged during installation and construction period so no evidence remains of correction work. Return items that cannot be refinished in the field to the shop; make required alterations and refinish entire unit, or provide new units.

END OF SECTION 05 52 13

SECTION 06 10 00 - ROUGH CARPENTRY

PART 1 - GENERAL

1.1 RELATED DOCUMENTS: Drawings and general provisions of Contract, including General and Supplementary Conditions and Division 1 Specification Sections, apply to this Section.

1.2 SUMMARY

A. This Section includes the following:
1. Wood grounds, nailers, and blocking.

B. Related Sections: The following Sections contain requirements that relate to this Section:
1. Division 06 Section, "Sheathing".
2. Division 07 Section, " Thermoplastic Roofing Membrane
3. Division 07 Section, "Exterior Solid Phenolic Panels
4. Division 07 Section, "Sheet Metal Roof Specialties".

C. DEFINITIONS: Rough carpentry includes carpentry work not specified as part of other Sections and generally not exposed, unless otherwise specified.

1.3 SUBMITTALS

A. General: Submit the following in accordance with Conditions of Contract and Division 1 Specification Sections.
1. Wood treatment data as follows including chemical treatment manufacturer's instructions for handling, storing, installation, and finishing of treated material:
2. For fire-retardant-treated wood products include certification by treating plant that treated material complies with specified standard and other requirements.

B. Material test reports from qualified independent testing laboratory indicating and interpreting test results relative to compliance of fire-retardant-treated wood products with requirements indicated.
1. Warranty of chemical treatment manufacturer for each type of treatment.

1.4 DELIVERY, STORAGE, AND HANDLING

A. Delivery and Storage: Keep materials under cover and dry. Protect against exposure to weather and contact with damp or wet surfaces. Stack lumber as well as plywood and other panels; provide for air circulation within and around stacks and under temporary coverings including polyethylene and similar materials.

1. For lumber and plywood pressure treated with waterborne chemicals, place spacers between each bundle to provide air circulation.

PART 2 - PRODUCTS

2.1 LUMBER, GENERAL

A. Lumber Standards: Furnish lumber manufactured to comply with PS 20 "American Softwood Lumber Standard" & with applicable grading rules of inspection agencies certified by American Lumber Standards Committee's (ALSC) Board of Review.

1. Grade Stamps: Provide lumber with each piece factory-marked with grade stamp of inspection agency evidencing compliance with grading rule requirements and identifying grading agency, grade, species, moisture content at time of surfacing, and mill.

B. Nominal sizes are indicated, except as shown by detail dimensions. Provide actual sizes as required by PS 20, for moisture content specified for each use.

1. Provide lumber with 15 percent maximum moisture content at time of dressing and shipment for sizes 2 inches or less in nominal thickness, unless otherwise indicated.

2.2 MISCELLANEOUS LUMBER

A. General: Provide lumber for support or attachment of other construction including rooftop equipment curbs and support bases, cant strips, bucks, nailers, blocking, furring, grounds, stripping, and similar members.

B. Fabricate miscellaneous lumber from dimension lumber of sizes indicated and into shapes shown.
1. Moisture content: 19 percent maximum for lumber items not specified to receive wood preservative treatment.

C. Grade: "Standard" grade light-framing-size lumber of any species or board-size lumber as required. "No. 2 Common" or "Standard" grade boards per WCLIB or WWPA rules or "No. 2 Boards" per SPIB rules.

D. CONSTRUCTION PANELS FOR BACKING: Plywood Backing Panels: For mounting electrical or telephone equipment, provide fire-retardant-treated plywood panels with grade designation, APA C-D PLUGGED EXPOSURE 1, in thickness indicated, or, if not otherwise indicated, not less than 15/32 inch.

2.3 FASTENERS

A. General: Provide fasteners of size and type indicated that comply with requirements specified in this article for material and manufacture.

B. Where rough carpentry is exposed to weather, in ground contact, or in area of high relative humidity, provide fasteners with a hot-dip zinc coating per ASTM A 153 or of AISI Type 304 stainless steel.
1. Nails, Wire, Brads, and Staples: FS FF-N-105.

C. Power Driven Fasteners: National Evaluation Report NER-272.
1. Wood Screws: ANSI B18.6.1.
2. Lag Bolts: ANSI B18.2.1.

D. Bolts: Steel bolts complying with ASTM A 307, Grade A; with ASTM A 563 hex nuts and where indicated, flat washers.

2.4 FIRE-RETARDANT TREATMENT BY PRESSURE PROCESS

A. General: Where fire-retardant-treated wood is indicated, pressure impregnate lumber and plywood with fire-retardant chemicals to comply with AWPA C20 and C27, respectively, for treatment type indicated; identify "fire-retardant- treated wood" with appropriate classification marking of Underwriters Laboratories, Inc., U.S. Testing, Timber Products Inspection, Inc. or other testing and inspecting agency acceptable to authorities having jurisdiction.

B. Current Evaluation/Research Reports: Provide fire-retardant-treated wood for which a current model code evaluation/research report exists that is acceptable to authorities having jurisdiction and that evidences compliance of fire-retardant-treated wood for application indicated.

C. Interior Type A: For interior locations use fire-retardant chemical formulation that produces treated lumber & plywood w/the following properties under conditions present after installation.

D. No reduction takes place in bending strength, stiffness, and fastener holding capacities below values published by manufacturer of chemical formulation that are based on tests by a qualified independent testing laboratory of treated wood products identical to those indicated for this Project under elevated temperature and humidity conditions simulating installed conditions.
   1. No other form of degradation occurs due to acid hydrolysis or other causes related to manufacture and treatment.
   2. No corrosion of metal fasteners results from their contact with treated wood.
   3. Exterior Type: Use for exterior locations & where indicated.

E. Inspect ea piece of treated lumber or plywood after drying & discard damaged or defective pieces

2.5 WOOD-PRESERVATIVE-TREATED MATERIALS

A. General: Where lumber or plywood is indicated as preservative treated or is specified to be treated, comply with applicable requirements of AWPA C2 (lumber) and AWPA C9 (Plywood). Mark each treated item with the Quality Mark Requirements of an inspection agency approved by ALSC's Board of Review.
   1. Do not use chemicals containing chromium or arsenic.
   2. For exposed items indicated to receive stained finish, use chemical formulations that do not bleed through, contain colorants, or otherwise adversely affect finishes.

B. Pressure treat aboveground items with waterborne preservatives to a minimum retention of 0.25 lb/cu. ft. After treatment, kiln dry lumber and plywood to a maximum moisture content of 19 and 15%, respectively. Treat indicated items and the following:
   1. Wood cants, nailers, curbs, equipment, support bases, blocking, stripping, and similar members in connection with roofing, flashing, vapor barriers, and waterproofing.
   2. Wood sills, sleepers, blocking, furring, stripping, and similar concealed members in contact with masonry or concrete.
   3. Wood floor plates installed over concrete slabs directly in contact with earth.

C. Pressure treat wood members in contact with ground or freshwater with waterborne preservatives to a minimum retention of 0.40 lb/cu. ft.

D. Complete fabrication of treated items before treatment, where possible. If cut after treatment, apply field treatment complying with AWPA M4 to cut surfaces. Inspect each piece of lumber or plywood after drying and discard damaged or defective pieces.

PART 3 - PART - EXECUTION

3.1 INSTALLATION, GENERAL

A. Discard units of material with defects that impair quality of rough carpentry construction and that are too small to use in fabricating rough carpentry with minimum joints or optimum joint arrangement.

B. Set rough carpentry to required levels & lines, with members plumb & true to line & cut & fitted.

C. Fit rough carpentry to other construction; scribe and cope as required for accurate fit. Correlate location of furring, nailers, blocking, grounds, and similar supports to allow attachment of other construction.

D. Securely attach rough carpentry work to substrate by anchoring and fastening as required.

3.2 WOOD GROUNDS, NAILERS, BLOCKING, AND SLEEPERS

A. Install wood grounds, nailers, blocking, and sleepers where shown and where required for screeding or attachment of other work. Form to shapes as shown and cut as required for true line and level of work to be attached. Coordinate location with other work involved.

1. Attach to substrates as required to support applied loading. Countersink bolts and nuts flush with surfaces, unless otherwise indicated. Build into masonry during installation of masonry work. Where possible, anchor to formwork before concrete placement.

B. Install permanent grounds of dressed, preservative treated, key-beveled lumber not less than 1-1/2 inches wide and of thickness required to bring face of ground to exact thickness of finish material involved. Remove temporary grounds when no longer required.

END OF SECTION 06 10 00

SECTION 06 20 00 - FINISH CARPENTRY

PART 1 - GENERAL

1.1 RELATED DOCUMENTS: Drawings and general provisions of the Contract, including General and Supplementary Conditions and Division 1 Specification Sections, apply to this Section.

1.2 SUMMARY

A. This Section includes the following:

1. Interior Solid Hardwood (3/4”) Wood Board Window Sills with painted finish.

B. Related Sections include the following:

1. Division 06 Section, "Rough Carpentry" for wood furring, blocking, shims, and hanging strips required for installing woodwork and concealed within other construction before woodwork installation.
2. Division 09 Section “Painting” for preparation of surfaces for transparent and painted finish.

1.3 DEFINITIONS: Interior architectural woodwork includes wood furring, blocking, shims, and hanging strips for installing woodwork items, unless concealed within other construction before woodwork installation.

1.4 SUBMITTALS

A. Product Data: For each type of product indicated, including finishing materials and processes.

B. Shop Drawings: Show location of each item, dimensioned plans and elevations, large-scale details, attachment devices, and other components.

1. Show locations and sizes of furring, blocking, and hanging strips, including concealed blocking and reinforcement specified in other Sections.

C. Samples for Verification: For the following:

1. Lumber with or for transparent finish, 5 inches (125 mm) wide by 24 inches (600 mm) long, for each species and cut, finished on 1 side and 1 edge.

D. QUALITY ASSURANCE

D. Installer Qualifications: An experienced installer who has completed architectural woodwork similar in material, design, and extent to that indicated for this Project and whose work has resulted in construction with a record of successful in-service performance.

E. Fabricator Qualifications: A firm experienced in producing architectural woodwork similar to that indicated for this Project and with a record of successful in-service performance, as well as sufficient production capacity to produce required units, within constraints of project schedule.

F. Quality Standard: Unless otherwise indicated, comply with AWI's "Architectural Woodwork Quality Standards" for grades of interior architectural woodwork, construction, finishes, and other requirements.

1.5 DELIVERY, STORAGE, AND HANDLING: Do not deliver woodwork until painting and similar operations that could damage woodwork have been completed in installation areas. If woodwork must be stored in other than installation areas, store only in areas where environmental conditions comply with requirements specified in "Project Conditions" Article.

1.6 PROJECT CONDITIONS

A. Environmental Limitations: Do not deliver or install woodwork until building is enclosed, wet work is complete, and HVAC system is operating and maintaining temperature and relative humidity at occupancy levels during the remainder of the construction period.

B. Field Measurements: Where woodwork is indicated to fit to other construction, verify dimensions of other construction by field measurements before fabrication and indicate measurements on Shop Drawings. Coordinate fabrication schedule with construction progress to avoid delaying the Work.

1. Locate concealed framing, blocking, and reinforcements that support woodwork by field measurements before being enclosed and indicate measurements on Shop Drawings.

2. Established Dimensions: Where field measurements cannot be made without delaying the Work, establish dimensions and proceed with fabricating woodwork without field measurements. Provide allowance for trimming at site, and coordinate construction to ensure that actual dimensions correspond to established dimensions.

1.7 COORDINATION: Coordinate sizes and locations of framing, blocking, furring, reinforcements, and other related units of Work specified in other Sections to ensure that interior architectural woodwork can be supported and installed as indicated.

PART 2 - PRODUCTS

2.1 MATERIALS

A. General: Provide materials that comply with requirements of the AWI quality standard for each type of woodwork and quality grade specified, unless otherwise indicated.

B. Wood Species for Opaque (Paint) Finish: Any closed-grain hardwood.

2.2 INSTALLATION MATERIALS

A. Furring, Blocking, Shims, and Hanging Strips: Fire-retardant-treated softwood lumber, kiln-dried to less than 15 percent moisture content.

B. Anchors: Select material, type, size, and finish required for each substrate for secure anchorage. Provide nonferrous-metal or hot-dip galvanized anchors and inserts on inside face of exterior walls and elsewhere as required for corrosion resistance. Provide toothed-steel or lead expansion sleeves for drilled-in-place anchors.

2.3 FABRICATION, GENERAL

A. Interior Woodwork Grade: Provide Custom grade interior woodwork complying with the referenced quality standard.

B. Wood Moisture Content: Comply with requirements of referenced quality standard for wood moisture content in relation to ambient relative humidity during fabrication and in installation areas.

C. Fabricate woodwork to dimensions, profiles, and details indicated. Ease edges to radius indicated for the following:
   1. Edges of Sills and Similar Members More Than 3/4 Inch (19 mm) Thick: 1/16 inch.

D. Complete fabrication, including assembly, finishing, and decoration application, to maximum extent possible, before shipment to Project site. Disassemble components only as necessary for shipment and installation. Where necessary for fitting at site, provide ample allowance for scribing, trimming, and fitting.

2.4 INTERIOR STANDING AND RUNNING TRIM FOR TRANSPARENT FINISH

A. Quality Standard: Comply with AWI Section 300.

B. Grade: Custom.

C. For trim items wider than available lumber, use veneered construction. Do not glue for width unless approved by Architect.

D. Backout or groove backs of flat trim members and kerf backs of other wide, flat members, except for members with ends exposed in finished work.

E. Paint Finish Standing and Running Trims:
   1. Window Sills /Stools.
      a. As detailed.
      b. Species: Closed grain hardwood suitable for paint finish.

2.5 SHOP FINISHING

A. Quality Standard: Comply with AWI Section 1500, unless otherwise indicated.
   1. Grade: Provide finishes of same grades as items to be finished.

B. General: Finish architectural woodwork at fabrication shop as specified in this Section. Defer only final touchup, cleaning, and polishing until after installation.

C. Preparations for Finishing: Comply with referenced quality standard for sanding, filling countersunk fasteners, sealing concealed surfaces, and similar preparations for finishing architectural woodwork, as applicable to each unit of work.

1. Backpriming: Apply one coat of sealer or primer, compatible with finish coats, to concealed surfaces of woodwork.

PART 3 - EXECUTION
3.1 PREPARATION

A. Condition woodwork to average prevailing humidity conditions in installation areas before installation.

B. Before installing architectural woodwork, examine shop-fabricated work for completion and complete work as required, including removal of packing and backpriming.

3.2 INSTALLATION

A. Quality Standard: Install woodwork to comply with AWI Section 1700 for the same grade specified in Part 2 of this Section for type of woodwork involved.

B. Install woodwork level, plumb, true, and straight. Shim as required with concealed shims. Install level and plumb (including tops) to a tolerance of 1/8 inch in 96 inches (3 mm in 2400 mm).

C. Scribe and cut woodwork to fit adjoining work, and refinish cut surfaces and repair damaged finish at cuts.

D. Anchor woodwork to anchors or blocking built in or directly attached to substrates. Secure with countersunk, concealed fasteners and blind nailing as required for complete installation. Use fine finishing nails or finishing screws for exposed fastening, countersunk and filled flush with woodwork and matching final finish if transparent finish is indicated.

3.3 ADJUSTING AND CLEANING

A. Repair damaged and defective woodwork, where possible, to eliminate functional and visual defects; where not possible to repair, replace woodwork. Adjust joinery for uniform appearance.

B. Clean woodwork on exposed and semiexposed surfaces. Touch up shop-applied finishes to restore damaged or soiled areas.

END OF SECTION

SECTION 06 40 23 - INTERIOR ARCHITECTURAL WOODWORK

PART 1 - GENERAL

1.1 RELATED DOCUMENTS: Drawings and general provisions of the Contract, including General and Supplementary Conditions and Division 1 Specification Sections, apply to this Section.

1.2 SUMMARY

A. This Section includes the following:
1. Plastic-laminate cabinets.
2. Solid-surfacing-material counter tops with sinks

B. Related Sections include the following:
1. Division 06 Section "Rough Carpentry" for wood furring, blocking, shims, and hanging strips required for installing woodwork and concealed within other construction before woodwork installation.

1.3 DEFINITIONS: Interior architectural woodwork includes wood furring, blocking, shims, and hanging strips for installing woodwork items, unless concealed within other construction before woodwork installation.

1.4 SUBMITTALS

A. Product Data: For medium-density fiberboard, plywood, high-pressure decorative laminate, thermoset decorative overlay, solid-surfacing material, cabinet hardware and accessories, and finishing materials and processes.

B. Shop Drawings: Show location of each item, dimensioned plans and elevations, large-scale details, attachment devices, and other components.

1. Show locations and sizes of furring, blocking, and hanging strips, including concealed blocking and reinforcement specified in other Sections.

C. Samples for Initial Selection: Manufacturer's color charts consisting of units or sections of units showing the full range of colors, textures, & patterns available for each type of material indicated.
1. Plastic laminates.
2. Thermoset decorative overlays.
3. Solid-surfacing materials.

D. Samples for Verification: For the following:
1. Exposed cabinet hardware and accessories, one unit for each type and finish.

.
1.5 QUALITY ASSURANCE

A. Installer Qualifications: An experienced installer who has completed architectural woodwork similar in material, design, and extent to that indicated for this Project and whose work has resulted in construction with a record of successful in-service performance.

B. Fabricator Qualifications: A firm experienced in producing architectural woodwork similar to that indicated for this Project and with a record of successful in-service performance, as well as sufficient production capacity to produce required units.

C. Quality Standard: Unless otherwise indicated, comply with AWI's "Architectural Woodwork Quality Standards" for grades of interior architectural woodwork, construction, finishes, and other requirements.

1.6 DELIVERY, STORAGE, AND HANDLING

A. Do not deliver woodwork until painting and similar operations that could damage woodwork have been completed in installation areas. If woodwork must be stored in other than installation areas, store only in areas where environmental conditions comply with requirements specified in "Project Conditions" Article.

1.7 PROJECT CONDITIONS

A. Environmental Limitations: Do not deliver or install woodwork until building is enclosed, wet work is complete, and HVAC system is operating and maintaining temperature and relative humidity at occupancy levels during the remainder of the construction period.

B. Field Measurements: Where woodwork is indicated to fit to other construction, verify dimensions of other construction by field measurements before fabrication and indicate measurements on Shop Drawings. Coordinate fabrication schedule with construction progress to avoid delaying the Work.

1. Locate concealed framing, blocking, and reinforcements that support woodwork by field measurements before being enclosed and indicate measurements on Shop Drawings.

2. Established Dimensions: Where field measurements cannot be made without delaying the Work, establish dimensions and proceed with fabricating woodwork without field measurements. Provide allowance for trimming at site, and coordinate construction to ensure that actual dimensions correspond to established dimensions.

1.8 COORDINATION: Coordinate sizes and locations of framing, blocking, furring, reinforcements, and other related units of Work specified in other Sections to ensure that interior architectural woodwork can be supported and installed as indicated.

PART 2 - PRODUCTS

2.1 PRODUCTS

A. Wood Species and Cut for Transparent Finish: Provide plain sliced Maple.

B. Wood Species for Opaque Finish: Any closed-grain hardwood.

C. Wood Products: Comply with the following:
1. Hardboard: AHA A135.4.
2. Medium-Density Fiberboard: ANSI A208.1, Grade M-2-Exterior Glue.

A. Thermoset Decorative Overlay: Particleboard complying with ANSI A208.1, Grade M-2, or medium-density fiberboard complying with ANSI A208.2, Grade MD, with surface of thermally fused, melamine-impregnated decorative paper complying with LMA SAT-1.
1. Color as selected by Architect from manufacturer's available colors (12 minimum).

B. High-Pressure Decorative Laminate: NEMA LD 3, grades as indicated, or if not indicated, as required by woodwork quality standard.

1. Manufacturer: Subject to compliance with requirements, provide high-pressure decorative laminates by one of the following:
a. Formica Corporation.
b. Wilsonart International; Div. of Premark International, Inc.
c. Approved equals.
2. Colors to be selected from manufactures' full range of standard laminates.

C. Adhesive for Bonding Plastic Laminate: Contact cement.

D. Solid-Surfacing Material: Homogeneous solid sheets of filled plastic resin complying with material and performance requirements in ANSI Z124.3, for Type 5 or Type 6, without a precoated finish.

1. Products: Subject to compliance with requirements, provide one of the following:
a. Avonite; Avonite, Inc.

b. Corian; DuPont Polymers.
c. Surell; Formica Corporation.
d. Fountainhead; International Paper, Decorative Products Div.
e. Approved equals.
2. Colors to be selected from manufacturer's full range of standard colors.

2.2 CABINET HARDWARE AND ACCESSORIES

A. General: Provide cabinet hardware and accessory materials associated with architectural cabinets, except for items specified in Division 8 Section "Door Hardware."

B. Hardware Standard: Comply with BHMA A156.9 for items indicated by referencing BHMA numbers or items referenced to this standard.

C. Butt Hinges: 2-3/4-inch, 5-knuckle steel hinges made from 0.095-inch- thick metal & as follows:
1. Semi-concealed Hinges for Overlay Doors: BHMA A156.9, B01521.

D. Catches: Push-in magnetic catches, BHMA A156.9, B03131 Roller catches, BHMA A156.9, B03071.

E. Shelf Rests: BHMA A156.9, B04013.

F. Drawer Slides: Side-mounted, full-extension, zinc-plated steel drawer slides with steel ball bearings, BHMA A156.9, B05091, and rated for the following loads:
1. Box Drawer Slides: 75 lbf (330 N).
2. File Drawer Slides: 150 lbf (670 N).
3. Pencil Drawer Slides: 45 lbf (200 N).
4. Keyboard Slide: 75 lbf (330 N).
5. Trash Bin Slides: 150 lbf (670 N).

G. Door Locks: BHMA A156.11, E07121.

H Drawer Locks: BHMA A156.11, E07041.

I. Grommets for Cable Passage through Countertops where indicated: 2-inch unless noted otherwise OD, color selected from manufacturer's molded-plastic grommets and matching plastic caps with slot for wire passage.
1. Product: Subject to compliance with requirements, provide "OG series" by Doug Mockett and Co., Inc.

J. Exposed Hardware Finishes: For exposed hardware, provide finish that complies with BHMA A156.18 for BHMA finish number indicated.
1. Brushed stainless steel.

K. For concealed hardware, provide manufacturer's standard finish that complies with product class requirements in BHMA A156.9.

2.3 INSTALLATION MATERIALS

A. Furring, Blocking, Shims, and Hanging Strips: Softwood or hardwood lumber, kiln-dried to less than 15 percent moisture content.

B. Anchors: Select material, type, size, and finish required for each substrate for secure anchorage. Provide nonferrous-metal or hot-dip galvanized anchors and inserts on inside face of exterior walls and elsewhere as required for corrosion resistance. Provide toothed-steel or lead expansion sleeves for drilled-in-place anchors.

2.4 FABRICATION, GENERAL

A. Interior Woodwork Grade: Provide Custom grade interior woodwork complying with the referenced quality standard.

B. Wood Moisture Content: Comply with requirements of referenced quality standard for wood moisture content in relation to ambient relative humidity during fabrication and in installation areas.

C. Fabricate woodwork to dimensions, profiles, and details indicated. Ease edges to radius indicated for the following:
   1. Corners of Cabinets and Edges of Solid-Wood (Lumber) Members 3/4 Inch Thick or Less: 1/16 inch.
   2. Edges of Rails and Similar Members More Than 3/4 Inch (19 mm) Thick: 1/8 inch.
   3. Corners of Cabinets and Edges of Solid-Wood (Lumber) Members and Rails: 1/16 inch.

D. Complete fabrication, including assembly, finishing, and hardware application, to maximum extent possible, before shipment to Project site. Disassemble components only as necessary for shipment and installation. Where necessary for fitting at site, provide ample allowance for scribing, trimming, and fitting.

E. Shop cut openings, to maximum extent possible, to receive hardware, appliances, plumbing fixtures, electrical work, and similar items. Locate openings accurately and use templates or roughing-in diagrams to produce accurately sized and shaped openings. Sand edges of cutouts to remove splinters and burrs.
   1. Seal edges of openings in countertops with a coat of varnish.

2.5 PLASTIC-LAMINATE CABINETS

A. Quality Standard: Comply with AWI Section 400 requirements for laminate cabinets.

B. Grade: Custom.

C. AWI Type of Cabinet Construction: Flush overlay.

D. Laminate Cladding for Exposed Surfaces: High-pressure decorative laminate complying with the following requirements:
   1. Horizontal Surfaces Other Than Tops: HGL.
   2. Postformed Surfaces: HGP.
   3. Vertical Surfaces: VGS.
   4. Edges: VGS.

E. Materials for Semiexposed Surfaces: Provide surface materials indicated below:
   1. Surfaces Other Than Drawer Bodies: Thermoset decorative overlay.
   2. Drawer Sides and Backs: Thermoset decorative overlay.
   3. Drawer Bottoms: Thermoset decorative overlay.

F. Colors, Patterns, and Finishes: Provide materials and products that result in colors and textures of exposed laminate surfaces complying with the following requirements:
   1. Provide Architect's selections from laminate manufacturer's full range of colors and finishes in the following categories:
      a. Solid colors.
      b. Patterns.

2.6 SOLID-SURFACING-MATERIAL WINDOW SILLS/STOOLS, COUNTER TOPS, AND WALL CAPS

A. Quality Standard: Comply with AWI Section 400 requirements for counter tops.

B. Grade: Custom.

C. Solid-Surfacing-Material Thickness: 1/2 inch (13 mm) with exposed edges built-up to 1 inch as indicated.

D. Colors, Patterns, and Finishes: Provide materials and products that result in colors of solid-surfacing material complying with the following requirements:

1. Provide Architect's selections from manufacturer's full range of colors and finishes.

E. Fabricate sills in one piece with shop-fabricated edges. Comply with solid-surfacing-material manufacturer's written recommendations for adhesives, sealers, fabrication, and finishing.

2.6 INTERIOR STANDING AND RUNNING TRIP FOR OPAQUE FINISH

A. Grade: Custom.

B. Wood Species: Any closed-grain.

C. Backout or groove backs of flat trim members and kerf backs of other wide, flat members, except for members with ends exposed in finished work.

2.8 SHOP FINISHING

A. Quality Standard: Comply with AWI Section 1500, unless otherwise indicated.

1. Grade: Provide finishes of same grades as items to be finished.

B. General: Finish architectural woodwork at fabrication shop as specified in this Section. Defer only final touchup, cleaning, and polishing until after installation.

C. Preparations for Finishing: Comply with referenced quality standard for sanding, filling countersunk fasteners, sealing concealed surfaces, and similar preparations for finishing architectural woodwork, as applicable to each unit of work.

D. Transparent Finish: Comply with requirements indicated below for grade, finish system, staining, and sheen, with sheen measured on 60-degree gloss meter per ASTM D 523:

1. Grade: Custom.
   a. AWI Finish System TR-3: Water-reducible acrylic lacquer.
   b. Staining: Match Architect's sample.
   c. Sheen: Satin, 30-50.

PART 3 - EXECUTION

3.1 PREPARATION

A. Condition woodwork to average prevailing humidity conditions in installation areas before installation.

B. Before installing architectural woodwork, examine shop-fabricated work for completion and complete work as required, including removal of packing and backpriming.

3.2 INSTALLATION

A. Quality Standard: Install woodwork to comply with AWI Section 1700 for the same grade specified in Part 2 of this Section for type of woodwork involved.

B. Install woodwork level, plumb, true, and straight. Shim as required with concealed shims. Install level and plumb (including tops) to a tolerance of 1/8 inch in 96 inches.

C. Scribe and cut woodwork to fit adjoining work, and refinish cut surfaces and repair damaged finish at cuts.

D. Anchor woodwork to anchors or blocking built in or directly attached to substrates. Secure with

countersunk, concealed fasteners and blind nailing as required for complete installation. Use fine finishing nails or finishing screws for exposed fastening, countersunk and filled flush with woodwork and matching final finish if transparent finish is indicated.

E. Cabinets: Install without distortion so doors and drawers fit openings properly and are accurately aligned. Adjust hardware to center doors and drawers in openings and to provide unencumbered operation. Complete installation of hardware and accessory items as indicated.
   1. Install cabinets with no more than 1/8 inch in 96-inch sag, bow, or other variation from a straight line.
   2. Fasten wall cabinets through back, near top and bottom, at ends and not more than 16 inches o.c. with No. 10 wafer-head screws sized for 1-inch penetration into appropriate blocking wood framing.

F. Countertops: Anchor securely by screwing through corner blocks of base cabinets or other supports into underside of countertop.
   1. Align adjacent solid-surfacing-material countertops and form seams to comply with manufacturer's written recommendations using adhesive in color to match countertop. Carefully dress joints smooth, remove surface scratches, and clean entire surface.
   2. Install countertops with no more than 1/8 inch in 96-inch sag, bow, or other variation from a straight line.
   3. Secure backsplashes to tops with concealed metal brackets at 16 inches o.c.
   4. Caulk space between backsplash and wall with sealant specified in Division 07 Section "Joint Sealants."

G. Complete the finishing work specified in this Section to extent not completed at shop or before installation of woodwork. Fill nail holes with matching filler where exposed. Apply specified finish coats, including stains and paste fillers if any, to exposed surfaces where only sealer/prime coats were applied in shop.

3.3 ADJUSTING AND CLEANING

A. Repair damaged and defective woodwork, where possible, to eliminate functional and visual defects; where not possible to repair, replace woodwork. Adjust joinery for uniform appearance.

B. Clean, lubricate, and adjust hardware.

C. Clean woodwork on exposed and semiexposed surfaces. Touch up shop-applied finishes to restore damaged or soiled areas.

END OF SECTION 06 40 23

SECTION 07 21 00 - THERMAL INSULATION

PART 1 - GENERAL

1.1 RELATED DOCUMENTS

A. Drawings and general provisions of the Contract, including General and Supplementary Conditions and Division 01 Specification Sections, apply to this Section.

1.2 SUMMARY

A. This Section includes the following:

1. Sound attenuation insulation for interior walls
2. Thermal insulation Batt Insulation for exterior wall wind girt cavities with retainer strapping for all exterior walls except Workshop 102.
3. Thermal Insulation Rigid Board for continuous insulation beneath exterior metal panels and foundation perimeter insulation.

B. Related Sections include the following:

1. Division 07 Section “Thermoplastic Roofing Membrane” for roof insulation as part of the roof assembly and warranty.
2. Division 09 Section "Gypsum Board"
3. Division 13 Section “Metal Buildings” for standard metal building installation at Workshop 102 exterior walls.
4. Division 22 Section "Plumbing Insulation."
5. Division 23 Section "HVAC Insulation."

1.3 DEFINITIONS

A. Mineral-Fiber Insulation: Insulation composed of rock-wool fibers, slag-wool fibers, or glass fibers; produced in boards and blanket with latter formed into batts (flat-cut lengths) or rolls.

1.4 PERFORMANCE REQUIREMENTS

A. Plenum Rating: Provide glass-fiber insulation where indicated in ceiling plenums whose test performance is rated as follows for use in plenums as determined by testing identical products per "Erosion Test" and "Mold Growth and Humidity Test" described in UL 181, or on comparable tests from another standard acceptable to authorities having jurisdiction.

1. Erosion Test Results: Insulation shows no visible evidence of cracking, flaking, peeling, or delamination of interior surface of duct assembly, after testing for 4 hours at 2500-fpm (13-m/s) air velocity.
2. Mold Growth and Humidity Test Results: Insulation shows no evidence of mold growth, delamination, or other deterioration due to the effects of high humidity, after inoculation with Chaetomium globosium on all surfaces and storing for 60 days at 100 percent relative humidity in the dark.

1.5 SUBMITTALS

A. Product Data: For each type of product indicated.

B. Product Test Reports: Based on evaluation of comprehensive tests performed by a qualified testing agency for insulation products.

C. Research/Evaluation Reports: For foam-plastic insulation.

1.6 QUALITY ASSURANCE

A. Source Limitations: Obtain each type of building insulation through one source from a single manufacturer.

B. Fire-Test-Response Characteristics: Provide insulation and related materials with the fire-test-response characteristics indicated, as determined by testing identical products per test method indicated below by UL or another testing and inspecting agency acceptable to authorities having jurisdiction. Identify materials with appropriate markings of applicable testing and inspecting agency.

1. Surface-Burning Characteristics: ASTM E 84.
2. Fire-Resistance Ratings: ASTM E 119.
3. Combustion Characteristics: ASTM E 136.

1.7 DELIVERY, STORAGE, AND HANDLING

A. Protect insulation materials from physical damage and from deterioration by moisture, soiling, and other sources. Store inside and in a dry location. Comply with manufacturer's written instructions for handling, storing, and protecting during installation.

B. Protect plastic insulation as follows:

1. Do not expose to sunlight, except to extent necessary for period of installation and concealment.
2. Protect against ignition at all times. Do not deliver plastic insulating materials to Project site before installation time.
3. Complete installation and concealment of plastic materials as rapidly as possible in each area of construction.

PART 2 - PRODUCTS

2.1 GLASS-FIBER BLANKET INSULATION

A. Available Manufacturers:

1. CertainTeed Corporation.
2. Guardian Fiberglass, Inc.
3. Johns Manville.
4. Owens Corning.
5. Approved equals**.**

B. Unfaced, Glass-Fiber Blanket Insulation: ASTM C 665, Type I (blankets without membrane facing); consisting of fibers; with maximum flame-spread and smoke-developed indexes of 25 and 50, respectively; passing ASTM E 136 for combustion characteristics.

1. For use as sound batt insulation at interior walls.

2. Full thickness.

C. Faced, Glass-Fiber Blanket Insulation: ASTM C 665, Type III (blankets with reflective membrane facing), Class A (membrane-faced surface with a flame-spread index of 25 or less); Category 1 (membrane is a vapor barrier), faced with foil-scrim-kraft, foil-scrim, or foil-scrim-polyethylene vapor-retarder membrane on 1 face.

1. Thickness and/or R-value as indicated on the drawings for exterior wall wind girt cavities.

2.2 EXTRUDED POLYSTYRENE BOARD

A. Extruded Polystyrene Board, Type IV: ASTM C 578, Type IV, 25-psi (173-kPa) minimum compressive strength; unfaced; maximum flame-spread and smoke-developed indexes of 25 and 450, respectively, per ASTM E 84.

1. Fire Propagation Characteristics: Passes NFPA 285 testing as part of an approved assembly.

2.3 AUXILIARY INSULATING MATERIALS

A. Adhesive for Bonding Insulation: Product with demonstrated capability to bond insulation securely to substrates indicated without damaging insulation and substrates.

B. Retainer Straps 25 GA. or equivalent wire grid system for exterior batts within Wall Girt cavity.

PART 3 - EXECUTION

3.1 EXAMINATION

A. Examine substrates and conditions, with Installer present, for compliance with requirements of Sections in which substrates and related work are specified and for other conditions affecting performance.

1. Proceed with installation only after unsatisfactory conditions have been corrected.

3.2 PREPARATION

A. Clean substrates of substances harmful to insulation or vapor retarders, including removing projections capable of puncturing vapor retarders or of interfering with insulation attachment.

3.3 INSTALLATION, GENERAL

A. Comply with insulation manufacturer's written instructions applicable to products and application indicated.

B. Install insulation that is undamaged, dry, and unsoiled and that has not been left exposed at any time to ice, rain, and snow.

C. Extend insulation in thickness indicated to envelop entire area to be insulated. Cut and fit tightly around obstructions and fill voids with insulation. Remove projections that interfere with placement.

D. Water-Piping Coordination: If water piping is located within insulated exterior walls, coordinate location of piping to ensure that it is placed on warm side of insulation and insulation encapsulates piping.

3.4 INSTALLATION OF CAVITY-WALL INSULATION

A. Install FSK faced fiberglass batt insulation with closely fitting joints using method indicated: Provide retainer strapping or wire to maintain insulation within wind girt of Metal Building construction/framing

3.5 INSTALLATION OF GENERAL BUILDING INSULATION

A. Apply insulation units to substrates by method indicated, complying with manufacturer's written instructions. If no specific method is indicated, bond units to substrate with adhesive or use mechanical anchorage to provide permanent placement and support of units.

B. Set vapor-retarder-faced units with vapor retarder to warm-in-winter side of construction, unless otherwise indicated.

1. Tape joints and ruptures in vapor retarder, and seal each continuous area of insulation to surrounding construction to ensure airtight installation.

C. Install mineral-fiber insulation in cavities formed by framing members according to the following requirements:

1. Use insulation widths and lengths that fill the cavities formed by framing members. If more than one length is required to fill cavity, provide lengths that will produce a snug fit between ends.
2. Place insulation in cavities formed by framing members to produce a friction fit between edges of insulation and adjoining framing members.
3. Maintain 3-inch clearance of insulation around recessed lighting fixtures.
4. For metal-framed wall cavities where cavity heights exceed 96 inches, support unfaced blankets mechanically and support faced blankets by taping flanges of insulation to flanges of metal studs.

3.6 PROTECTION: Protect installed insulation and vapor retarders from damage due to harmful weather exposures, physical abuse, and other causes. Provide temporary coverings or enclosures where insulation is subject to abuse and cannot be concealed and protected by permanent construction immediately after installation.

END OF SECTION 07 21 00

SECTION 07 42 13 – METAL WALL PANELS

PART 1 - GENERAL

1.1 RELATED DOCUMENTS

A. Drawings and general provisions of the Contract, including General and Supplementary Conditions and Division 01 Specification Sections, apply to this Section.

1.2 SUMMARY

A. Section includes:
1. Exterior Metal Wall Panels with exposed fasteners.
2. Back up air infiltration barrier

B. Related Sections:

1. Division 05 Section “Cold formed Metal Framing” for Zee Furring substrate
2. Division 07 Section "Sheet Metal Flashing and Trim" for field-formed flashings and other sheet metal work not part of metal wall panel assemblies.

1.3 DEFINITION

A. Metal Wall Panel Assembly: Metal wall panels, attachment system components, miscellaneous metal framing, and accessories necessary for a complete weathertight wall system.

1.4 PERFORMANCE REQUIREMENTS

A. General Performance: Metal-faced composite wall panel assemblies shall comply with performance requirements without failure due to defective manufacture, fabrication, installation, or other defects in construction.

B. Air Infiltration: Air leakage through assembly of not more than 0.06 cfm/sq. ft. (0.3 L/s per sq. m) of wall area when tested according to ASTM E 283 at the following test-pressure difference:

C. Water Penetration Under Static Pressure: No water penetration when tested according to ASTM E 331 at the following test-pressure difference:

1. Test-Pressure Difference: 6.24 lb./sq. ft. (300 Pa).

D. Structural Performance: Provide metal-faced composite wall panel assemblies capable of withstanding the effects of the following loads and stresses within limits and under conditions indicated, based on testing according to ASTM E 330:

1. Wind Loads: Determine loads based on the following minimum design wind pressures:

a. Uniform pressure of 25 lb./sq. ft. (957 Pa), acting inward or outward.

2. Deflection Limits: Metal-faced composite wall panel assemblies shall withstand wind loads with horizontal deflections no greater than 1/175 of the span at the perimeter and 1/60 of the span anywhere in the panel.

E. Thermal Movements: Allow for thermal movements from ambient and surface temperature changes by preventing buckling, opening of joints, overstressing of components, failure of joint sealants, failure of connections, and other detrimental effects. Base calculations on surface temperatures of materials due to both solar heat gain and nighttime-sky heat loss.

1. Temperature Change (Range): 120 deg F (67 deg C), ambient; 180 deg F (100 deg C), material surfaces.

1.5 SUBMITTALS

A. Product Data: For each type of product indicated. Include construction details, material descriptions, dimensions of individual components and profiles, and finishes for each type of metal wall panel and accessory.

B. Shop Drawings: Show fabrication and installation layouts of metal wall panels; details of edge conditions, joints, panel profiles, corners, anchorages, trim, flashings, closures, and accessories;

1. Accessories: Include details of the following items, at a scale of not less than 1-1/2 inches per 12 inches (1:10):

a. Flashing and trim.

C. Samples for Initial Selection: For each type of metal wall panel indicated with 3” x 3”, factory-applied color finishes.

1. Include similar Samples of trim and accessories involving color selection.

D. Coordination Drawings: Exterior elevations, drawn to scale, on which the following items are shown and coordinated with each other, using input from installers of the items involved:

1. Wall panels and attachments.
2. Wall-mounted items including doors, windows, and lighting fixtures.

E. Product Test Reports: Based on evaluation of comprehensive tests performed by a qualified testing agency, for each product.

F. Maintenance Data: For metal wall panels to include in maintenance manuals.

G. Warranties: Samples of special warranties.

1.6 QUALITY ASSURANCE

A. Source Limitations: Obtain each type of metal wall panel from single source from single manufacturer.

B. Preinstallation Conference: Conduct conference at Project site.

1. Meet with Owner, Architect, and metal wall panel Installer, metal wall panel manufacturer's representative, structural-support Installer, and installers whose work interfaces with or affects metal wall panels including installers of doors, windows.
2. Review and finalize construction schedule and verify availability of materials, Installer's personnel, equipment, and facilities needed to make progress and avoid delays.

3. Review methods and procedures related to metal wall panel installation, including manufacturer's written instructions.
4. Examine support conditions for compliance with requirements, including alignment between and attachment to structural members.
5. Review flashings, special siding details, wall penetrations, openings, and condition of other construction that will affect metal wall panels.
6. Review temporary protection requirements for metal panel assembly during and after installation.

1.7 DELIVERY, STORAGE, AND HANDLING

A. Deliver components, sheets, metal wall panels, and other manufactured items so as not to be damaged or deformed. Package metal wall panels for protection during transportation and handling.

B. Unload, store, and erect metal wall panels in a manner to prevent bending, warping, twisting, and surface damage.

C. Store metal wall panels to ensure dryness, with positive slope for drainage of water. Do not store metal wall panels in contact with other materials that might cause staining, denting, or other surface damage. Do not allow storage space to exceed 120 deg F (49 deg C).

D. Retain strippable protective covering on metal wall panel for period of panel installation.

1.8 PROJECT CONDITIONS

A. Weather Limitations: Proceed with installation only when existing and forecasted weather conditions permit assembly of metal wall panels to be performed according to manufacturer's written instructions and warranty requirements.

B. Field Measurements: Verify locations of structural members and wall opening dimensions by field measurements before metal wall panel fabrication and indicate measurements on Shop Drawings.

1.9 COORDINATION

A. Coordinate metal wall panel assemblies with rain drainage work, flashing, trim, and construction of studs, soffits, and other adjoining work to provide a leakproof, secure, and noncorrosive installation.

1.10 WARRANTY

A. Special Warranty: Manufacturer's standard form in which manufacturer agrees to repair or replace components of metal wall panel assemblies that fail in materials or workmanship within specified warranty period.

1. Failures include, but are not limited to, the following:

a. Structural failures, including rupturing, cracking, or puncturing.
b. Deterioration of metals and other materials beyond normal weathering.

2. Warranty Period: Five years from date of Substantial Completion.

B. Special Warranty on Panel Finishes: Manufacturer's standard form in which manufacturer agrees to repair finish or replace metal-faced composite wall panels that show evidence of deterioration of factory-applied finishes within specified warranty period.

1. Exposed Panel Finish: Deterioration includes, but is not limited to, the following:

a. Color fading more than 5 Hunter units when tested according to ASTM D 2244.
b. Chalking in excess of a No. 8 rating when tested according to ASTM D 4214.
c. Cracking, checking, peeling, or failure of paint to adhere to bare metal.

2. Finish Warranty Period: 20 years from date of Substantial Completion.

C. Special Weathertightness Warranty: Manufacturer's standard form in which manufacturer agrees to repair or replace metal roof panel assemblies that fail to remain weathertight, including leaks, within specified warranty period.

1. Weathertight Warranty Period: 2 years from date of Substantial Completion.

PART 2 - PRODUCTS

2.1 EXPOSED-FASTENER, LAP-SEAM METAL WALL PANELS

A. General: Provide factory-formed metal panels designed to be field assembled by lapping side edges of adjacent panels and mechanically attaching panels to supports using exposed fasteners in side laps. Include accessories required for weathertight installation.

B. Corrugated-Profile, Exposed-Fastener Metal Wall Panels. Formed with alternating curved ribs spaced at 2.75 inches o.c. across width of panel.

1. Basis-of-Design Product: Subject to compliance with requirements, provide **Mueller Inc. Corrugated Panels** indicated on Drawings or comparable product by one of the following:

a. AEP Span; a BlueScope Steel company.
b. Berridge Manufacturing Company.
c. Firestone Metal Products, LLC.
d. Flexospan Steel Buildings, Inc.
e. MBCI; a division of NCI Building Systems, L.P.
f. Metal Sales Manufacturing Corporation.
g. Union Corrugating Company.
h. Prior Approved Equals

2. Metallic-Coated Steel Sheet: Zinc-coated (galvanized) steel sheet complying with ASTM A 653/A 653M, G90 (Z275) coating designation,; structural quality. Pre-painted by the coil-coating process to comply with ASTM A 755/A 755M.

a. Nominal Thickness: 24 Gauge
b. Exterior Finish: Kynar 500
c. Color: As selected by Architect from Manufacturer’s full range of standard and premium colors.

C. Panel Sealants:

1. Joint Sealant: ASTM C 920; elastomeric polyurethane, polysulfide, or silicone sealant; of type, grade, class, and use classifications required to seal joints in metal-faced composite wall panels and remain weathertight; and as recommended in writing by panel manufacturer.
   a. Provide Dow Corning 795 Silicone sealant.

2.2 MISCELLANEOUS MATERIALS

A. Fasteners: Self-tapping screws, bolts, nuts, self-locking rivets and bolts, end-welded studs, and other suitable fasteners designed to withstand design loads. Provide exposed fasteners with heads matching color of metal-faced composite wall panels by means of plastic caps or factory-applied coating. Provide EPDM, PVC, or neoprene sealing washers.

2.3 AIR INFILTRATION BARRIER

A. At cavities/layers behind metal wall panels apply to substrate DuPont™ Tyvek® Commercial Wrap® or approved equal, 2.7 oz/yd^2 to provide at weatherproof infiltration barrier. Provide all accessories for openings for a complete system.

2.4 ACCESSORIES

A. Wall Panel Accessories: Provide components required for a complete metal wall panel assembly including trim, copings, fasciae, mullions, sills, corner units, clips, flashings, sealants, gaskets, fillers, closure strips, and similar items. Match material and finish of metal wall panels unless otherwise indicated.

B. Flashing and Trim: Formed from 0.018-inch- (0.46-mm-) minimum thickness, zinc-coated (galvanized) steel sheet or aluminum-zinc alloy-coated steel sheet pre-painted with coil coating. Provide flashing and trim as required to seal against weather and to provide finished appearance. Locations include, but are not limited to, bases, drips, sills, jambs, corners, endwalls, framed openings, rakes, fasciae, parapet caps, soffits, reveals, and fillers. Finish flashing and trim with same finish system as adjacent metal wall panels.

2.5 FABRICATION

A. General: Fabricate and finish metal wall panels and accessories at the factory to greatest extent possible, by manufacturer's standard procedures and processes, as necessary to fulfill indicated performance requirements.

B. Fabricate metal wall panels in a manner that eliminates condensation on interior side of panel and with joints between panels designed to form weathertight seals.

C. Sheet Metal Accessories: Fabricate flashing and trim to comply with recommendations in SMACNA's "Architectural Sheet Metal Manual" that apply to design, dimensions, metal, and other characteristics of item indicated.

   1. Form exposed sheet metal accessories that are without excessive oil canning, buckling, and tool marks and that are true to line and levels indicated, with exposed edges folded back to form hems.

2. Sealed Joints: Form non-expansion but movable joints in metal to accommodate elastomeric sealant to comply with SMACNA standards.
3. Conceal fasteners and expansion provisions where possible.
4. Fabricate cleats and attachment devices from same material as accessory being anchored or from compatible, noncorrosive metal recommended by metal-faced composite wall panel manufacturer.
   a. Size: As recommended by SMACNA's "Architectural Sheet Metal Manual" or metal wall panel manufacturer for application, but not less than thickness of metal being secured.

2.6 GENERAL FINISH REQUIREMENTS

A. Comply with NAAMM's "Metal Finishes Manual for Architectural and Metal Products" for recommendations for applying and designating finishes.

B. Protect mechanical and painted finishes on exposed surfaces from damage by applying a strippable, temporary protective covering before shipping.

PART 3 - EXECUTION

3.1 EXAMINATION

A. Examine substrates, areas, and conditions, with Installer present, for compliance with requirements for installation tolerances, metal-faced composite wall panel supports, and other conditions affecting performance of the Work.
   1. Examine wall sheathing to verify that sheathing joints are supported by framing or blocking and that installation is within flatness tolerances required by metal-faced composite wall panel manufacturer.
   2. Verify that weather-resistant sheathing paper has been installed over sheathing or backing substrate to prevent air infiltration or water penetration.
      a. Install Air Infiltration Barrier as specified.

B. Examine roughing-in for components and systems penetrating metal-faced composite wall panels to verify actual locations of penetrations relative to seam locations of panels before panel installation.

C. Proceed with installation only after unsatisfactory conditions have been corrected.

3.2 METAL WALL PANEL INSTALLATION

A. General: Install metal panels according to manufacturer's written instructions in orientation, sizes, and locations indicated. Install panels perpendicular to supports unless otherwise indicated. Anchor metal panels and other components of the Work securely in place, with provisions for thermal and structural movement.

   1. Shim or otherwise plumb substrates receiving metal panels.
   2. Flash and seal metal panels at perimeter of all openings. Fasten with self-tapping screws. Do not begin installation until air- or water-resistive barriers and flashings that will be concealed by metal panels are installed.
   3. Install screw fasteners in predrilled holes.
   4. Locate and space fastenings in uniform vertical and horizontal alignment.

5. Install flashing and trim as metal panel work proceeds.
6. Align bottoms of metal panels and fasten with blind rivets, bolts, or self-tapping screws. Fasten flashings and trim around openings and similar elements with self-tapping screws.
7. Provide weathertight escutcheons for pipe- and conduit-penetrating panels.

B. Fasteners:

1. Steel Panels: Use stainless-steel fasteners for surfaces exposed to the exterior; use galvanized-steel fasteners for surfaces exposed to the interior.

C. Metal Protection: Where dissimilar metals contact each other or corrosive substrates, protect against galvanic action as recommended in writing by metal panel manufacturer.

D. Lap-Seam Metal Panels: Fasten metal panels to supports with fasteners at each lapped joint at location and spacing recommended by manufacturer.

1. Lap ribbed or fluted sheets one full rib. Apply panels and associated items true to line for neat and weathertight enclosure.
2. Provide metal-backed washers under heads of exposed fasteners bearing on weather side of metal panels.
3. Locate and space exposed fasteners in uniform vertical and horizontal alignment. Use proper tools to obtain controlled uniform compression for positive seal without rupture of washer.
4. Install screw fasteners with power tools having controlled torque adjusted to compress washer tightly without damage to washer, screw threads, or panels. Install screws in predrilled holes.
5. Flash and seal panels with weather closures at perimeter of all openings.

E. Watertight Installation:

1. Apply a continuous ribbon of sealant or tape to seal lapped joints of metal panels, using sealant or tape as recommend by manufacturer on side laps of nesting-type panels; and elsewhere as needed to make panels watertight.
2. Provide sealant or tape between panels and protruding equipment, vents, and accessories.

3.3 ACCESSORY INSTALLATION

A. General: Install accessories with positive anchorage to building and weathertight mounting and provide for thermal expansion. Coordinate installation with flashings and other components.

1. Install components required for a complete metal wall panel assembly including trim, copings, corners, seam covers, flashings, sealants, gaskets, fillers, closure strips, and similar items.

B. Flashing and Trim: Comply with performance requirements, manufacturer's written installation instructions, and SMACNA's "Architectural Sheet Metal Manual." Provide concealed fasteners where possible, and set units true to line and level as indicated. Install work with laps, joints, and seams that will be permanently watertight and weather resistant.

1. Install exposed flashing and trim that is without excessive oil canning, buckling, and tool marks and that is true to line and levels indicated, with exposed edges folded back to

form hems. Install sheet metal flashing and trim to fit substrates and to result in waterproof and weather-resistant performance.

2. Expansion Provisions: Provide for thermal expansion of exposed flashing and trim. Space movement joints at a maximum of 10 feet (3 m) with no joints allowed within 24 inches (610 mm) of corner or intersection. Where lapped expansion provisions cannot be used or would not be sufficiently weather resistant and waterproof, form expansion joints of intermeshing hooked flanges, not less than 1 inch (25 mm) deep, filled with mastic sealant (concealed within joints).

3.4 ERECTION TOLERANCES

A. Installation Tolerances: Shim and align metal-faced composite wall panel units within installed tolerance of 1/4 inch in 20 feet (6 mm in 6 m), non-accumulative, on level, plumb, and location lines as indicated and within 1/8-inch (3-mm) offset of adjoining faces and of alignment of matching profiles.

3.5 CLEANING

A. Remove temporary protective coverings and strippable films, if any, as metal wall panels are installed unless otherwise indicated in manufacturer's written installation instructions. On completion of metal wall panel installation, clean finished surfaces as recommended by panel manufacturer. Maintain in a clean condition during construction.

B. After metal wall panel installation, clear weep holes and drainage channels of obstructions, dirt, and sealant.

C. Replace metal wall panels that have been damaged or have deteriorated beyond successful repair by finish touchup or similar minor repair procedures.

END OF SECTION 07 42 13

SECTION 07 42 16 - METAL SOFFIT PANELS

PART 1 - GENERAL

1.1 RELATED DOCUMENTS

A. Drawings and general provisions of the Contract, including General and Supplementary Conditions and Division 01 Specification Sections, apply to this Section.

1.2 SUMMARY

A. Section includes metal (Aluminum) soffit panels for exterior locations.

B. Related Sections:

1. Division 07 Section “Metal Wall Panels”.
2. Division 07 Section “Sheet Metal Roof Accessories”
3. Division 26 Section “Electrical” for recessed light fixtures.

1.3 ACTION SUBMITTALS

A. Product Data: For each type of product.

1. Include construction details, material descriptions, dimensions of individual components and profiles, and finishes for each type of panel and accessory.

B. Shop Drawings:

1. Include fabrication and installation layouts of metal panels; details of edge conditions, joints, panel profiles, corners, anchorages, attachment system, trim, flashings, closures, and accessories; and special details.
2. Accessories: Include details of flashing, trim, and anchorage systems, at a scale of not less than 1-1/2 inches = 1 foot.

C. Samples for Initial Selection: For each type of metal panel indicated with factory-applied color finishes.

1. Include similar Samples of trim and accessories involving color selection.

D. Samples for Verification: For each type of exposed finish required, prepared on Samples of size indicated below:

1. Metal Panels: 12 inches (305 mm) long by actual panel width. Include fasteners, closures, and other metal panel accessories.

1.4 INFORMATIONAL SUBMITTALS

A. Qualification Data: For Installer.

1.5 CLOSEOUT SUBMITTALS

A. Maintenance Data: For metal panels to include in maintenance manuals.

1.6 QUALITY ASSURANCE

A. Installer Qualifications: An entity that employs installers and supervisors who are trained and approved by manufacturer.

1.7 DELIVERY, STORAGE, AND HANDLING

A. Deliver components, metal panels, and other manufactured items so as not to be damaged or deformed. Package metal panels for protection during transportation and handling.

B. Unload, store, and erect metal panels in a manner to prevent bending, warping, twisting, and surface damage.

C. Stack metal panels horizontally on platforms or pallets, covered with suitable weathertight and ventilated covering. Store metal panels to ensure dryness, with positive slope for drainage of water. Do not store metal panels in contact with other materials that might cause staining, denting, or other surface damage.

D. Retain strippable protective covering on metal panels during installation.

1.8 FIELD CONDITIONS

A. Weather Limitations: Proceed with installation only when existing and forecasted weather conditions permit assembly of metal panels to be performed according to manufacturers' written instructions and warranty requirements.

1.9 COORDINATION

A. Coordinate metal panel installation with rain drainage work, flashing, trim, construction of canopy, and other adjoining work to provide a leak-proof, secure, and noncorrosive installation.

1.10 WARRANTY

A. Special Warranty: Manufacturer's standard form in which manufacturer agrees to repair or replace components of metal panel systems that fail in materials or workmanship within specified warranty period.

1. Failures include, but are not limited to, the following:

   a. Structural failures including rupturing, cracking, or puncturing.
   b. Deterioration of metals and other materials beyond normal weathering.

2. Warranty Period: Two years from date of Substantial Completion.

PART 2 - PRODUCTS

2.1 PERFORMANCE REQUIREMENTS

A. Structural Performance: Provide metal panel systems capable of withstanding the effects of the following loads, based on testing according to ASTM E 1592:

   1. Wind Loads: 90 MPH up/down rated.
   2. Deflection Limits: For wind loads, no greater than 1/180 of the span.
   3. Provide for access to electrical items as required.

B. Thermal Movements: Allow for thermal movements from ambient and surface temperature changes by preventing buckling, opening of joints, overstressing of components, failure of joint sealants, failure of connections, and other detrimental effects. Base calculations on surface temperatures of materials due to both solar heat gain and nighttime-sky heat loss.

   1. Temperature Change (Range): 120 deg F (67 deg C), ambient; 180 deg F (100 deg C), material surfaces.

2.2 METAL SOFFIT PANELS

A. General: Provide metal soffit panels designed to be installed by lapping and interconnecting side edges of adjacent panels and mechanically attaching through panel to supports using concealed fasteners in side laps. Include accessories required for weathertight installation.

B. Reveal-Joint-Profile Metal Soffit Panels: Solid panels formed with vertical panel edges and a flat pan between panel edges; with recessed reveal joint between panels.

   1. Basis of Design: USG Paraline II for exterior soffits or approved equal.

   2. Aluminum Sheet: Coil-coated sheet, ASTM B 209 (ASTM B 209M), alloy as standard with manufacturer, with temper as required to suit forming operations and structural performance required.

      a. Thickness: 0.028 inch .Manufacturers standard
      b. Surface: Smooth, flat finish.
      c. Exterior Finish: Manufacturers Baked Enamel.
      d. Color: As selected by Architect from manufacturer's full range.

   3. Panel Coverage 3-1/4 inch.

4. Panel Height: ¾ inch.

2.3 MISCELLANEOUS MATERIALS

A. Miscellaneous Metal Subframing and Furring: ASTM A 792/A 792M, Class AZ50 (Class AZM150) aluminum-zinc-alloy coating designation unless otherwise indicated. Provide manufacturer's standard sections as required for support and alignment of metal panel system.

B. Panel Accessories: Provide components required for a complete, weathertight panel system including trim, clips, flashings, sealants, gaskets, fillers, closure strips, and similar items. Match material and finish of metal panels unless otherwise indicated.

C. Flashing and Trim: Provide flashing and trim formed from same material as metal panels as required to seal against weather and to provide finished appearance. Finish flashing and trim with same finish system as adjacent metal panels.

D. Panel Fasteners: Self-tapping screws designed to withstand design loads. Provide exposed fasteners with heads matching color of metal panels by means of plastic caps or factory-applied coating. Provide EPDM or PVC sealing washers for exposed fasteners.

E. Panel Sealants: Provide sealant types recommended by manufacturer that are compatible with panel materials, are nonstaining, and do not damage panel finish.

2.4 FABRICATION

A. General: Fabricate and finish metal panels and accessories at the factory, by manufacturer's standard procedures and processes, as necessary to fulfill indicated performance requirements demonstrated by laboratory testing. Comply with indicated profiles and with dimensional and structural requirements.

B. Fabricate metal panel joints with factory-installed captive gaskets or separator strips that provide a weathertight seal and prevent metal-to-metal contact, and that minimize noise from movements.

C. Sheet Metal Flashing and Trim: Fabricate flashing and trim to comply with manufacturer's recommendations and recommendations in SMACNA's "Architectural Sheet Metal Manual" that apply to design, dimensions, metal, and other characteristics of item indicated.

1. Form exposed sheet metal accessories that are without excessive oil canning, buckling, and tool marks and that are true to line and levels indicated, with exposed edges folded back to form hems.
2. Seams for Aluminum: Fabricate nonmoving seams with flat-lock seams. Form seams and seal with epoxy seam sealer. Rivet joints for additional strength.
3. Conceal fasteners and expansion provisions where possible. Exposed fasteners are not allowed on faces of accessories exposed to view.

2.5 FINISHES

A. Protect mechanical and painted finishes on exposed surfaces from damage by applying a strippable, temporary protective covering before shipping.

B. Appearance of Finished Work Noticeable variations in same piece are not acceptable. Variatio

C. Aluminum Panels and Accessories:
   1. Exposed Baked Enamel Finish

PART 3 - EXECUTION

3.1 EXAMINATION

A. Examine substrates, areas, and conditions, with Installer present, for compliance with requirements for installation tolerances, metal panel supports, and other conditions affecting performance of the Work.

   1. Examine framing to verify that girts, angles, channels, studs, and other structural panel support members and anchorage have been installed within alignment tolerances required by metal panel manufacturer.

B. Examine roughing-in for components and systems penetrating metal panels to verify actual locations of penetrations relative to seam locations of metal panels before installation.

C. Proceed with installation only after unsatisfactory conditions have been corrected.

3.2 PREPARATION

A. Miscellaneous Supports: Install subframing, furring, and other miscellaneous panel support members and anchorages according to ASTM C 754 and metal panel manufacturer's written recommendations.

3.3 METAL PANEL INSTALLATION

A. General: Install metal panels according to manufacturer's written instructions in orientation, sizes, and locations indicated. Install panels perpendicular to supports unless otherwise indicated. Anchor metal panels and other components of the Work securely in place, with provisions for thermal and structural movement.

   1. Shim or otherwise plumb substrates receiving metal panels.
   2. Flash and seal metal panels at perimeter of all openings. Fasten with self-tapping screws.
   3. Install flashing and trim as metal panel work proceeds.

B. Fasteners:
   1. Aluminum Panels: Use aluminum or stainless-steel fasteners for surfaces exposed to the exterior.

C. Metal Protection: Where dissimilar metals contact each other or corrosive substrates, protect against galvanic action as recommended in writing by metal panel manufacturer.

D. Accessory Installation: Install accessories with positive anchorage to building and weathertight mounting, and provide for thermal expansion. Coordinate installation with flashings and other components.

1. Install components required for a complete metal panel system including trim, corners, seam covers, flashings, sealants, gaskets, fillers, closure strips, and similar items. Provide types indicated by metal panel manufacturer; or, if not indicated, provide types recommended by metal panel manufacturer.

E. Flashing and Trim: Comply with performance requirements, manufacturer's written installation instructions, and SMACNA's "Architectural Sheet Metal Manual." Provide concealed fasteners where possible, and set units true to line and level as indicated. Install work with laps, joints, and seams that are permanently watertight.

1. Install exposed flashing and trim that is without buckling, and tool marks, and that is true to line and levels indicated, with exposed edges folded back to form hems. Install sheet metal flashing and trim to fit substrates and to achieve waterproof performance.
2. Expansion Provisions: Provide for thermal expansion of exposed flashing and trim. Space movement joints at a maximum of 10 feet (3 m) with no joints allowed within 24 inches (610 mm) of corner or intersection. Where lapped expansion provisions cannot be used or would not be waterproof, form expansion joints of intermeshing hooked flanges, not less than 1 inch (25 mm) deep, filled with mastic sealant (concealed within joints).

3.4 CLEANING AND PROTECTION

A. Remove temporary protective coverings and strippable films, if any, as metal panels are installed unless otherwise indicated in manufacturer's written installation instructions. On completion of metal panel installation, clean finished surfaces as recommended by metal panel manufacturer. Maintain in a clean condition during construction.

B. After metal panel installation, clear weep holes and drainage channels of obstructions, dirt, and sealant.

C. Replace metal panels that have been damaged or have deteriorated beyond successful repair by finish touchup or similar minor repair procedures.

END OF SECTION 07 42 16.

SECTION 07 54 23 - THERMOPLASTIC POLYOLEFIN (TPO) ROOFING

PART 1 - GENERAL

1.1 RELATED DOCUMENTS

A. Drawings and general provisions of the Contract, including General and Supplementary Conditions and Division 01 Specification Sections, apply to this Section.

1.2 SUMMARY

A. Section Includes:

1. Fully Adhered TPO membrane roofing system for roofing over new thermal insulation substrate over new metal roof deck.

B. Related Sections:

1. Division 06 Section "Rough Carpentry" for wood nailers, curbs, and blocking.
2. Division 07 Section "Sheet Metal Roofing Specialties" for metal roof penetration flashings, flashings, and counter flashings.
3. Division 07 Section "Joint Sealants" for joint sealants, joint fillers, and joint preparation.

1.3 DEFINITIONS

A. TPO: Thermoplastic polyolefin.

B. Roofing Terminology: See ASTM D 1079 and glossary in NRCA's "The NRCA Roofing and Waterproofing Manual" for definitions of terms related to roofing work in this Section.

1.4 PERFORMANCE REQUIREMENTS

A. General Performance: Installed membrane roofing and base flashings shall withstand specified uplift pressures, thermally induced movement, and exposure to weather without failure due to defective manufacture, fabrication, installation, or other defects in construction. Membrane roofing and base flashings shall remain watertight.

B. Material Compatibility: Provide roofing materials that are compatible with one another under conditions of service and application required, as demonstrated by membrane roofing manufacturer based on testing and field experience.

C. Roofing System Design: Provide membrane roofing system that is identical to systems that have been successfully tested by a qualified testing and inspection agency to resist uplift pressure calculated according to ASCE/SEI 7.

1. Uplift: 1-90 rating.
2. Hail Resistance: SH.
3. Wind Speed: 90 MPH

D. Energy Performance: Provide roofing system with initial Solar Reflectance Index not less than 78 when calculated according to ASTM E 1980, based on testing identical products by a qualified testing agency.

1.5 SUBMITTALS

A. Product Data: For each type of product indicated.

B. Shop Drawings: For roofing system. Include plans, elevations, sections, details, and attachments to other work.

1. Base flashings and membrane terminations.
2. Tapered insulation, including slopes.
3. Insulation fastening patterns for corner, perimeter, and field-of-roof locations.

C. Samples for Verification: For the following products:

1. Sheet roofing, of color specified.
2. Roof insulation.

D. Qualification Data: For qualified Installer and manufacturer.

E. Manufacturer Certificates: Signed by roofing manufacturer certifying that roofing system complies with requirements specified in "Performance Requirements" Article.

F. Product Test Reports: Based on evaluation of comprehensive tests performed by manufacturer and witnessed by a qualified testing agency, for components of membrane roofing system.

G. Field quality-control reports.

H. Maintenance Data: For roofing system to include in maintenance manuals.

I. Warranties: Sample of special warranties.

1.6 QUALITY ASSURANCE

A. Manufacturer Qualifications: A qualified manufacturer that is FM Approvals approved for membrane roofing system identical to that used for this Project.

B. Installer Qualifications: A qualified firm that is approved, authorized, or licensed by membrane roofing system manufacturer to install manufacturer's product and that is eligible to receive manufacturer's special warranty.

C. Source Limitations: Obtain components including roof insulation, fasteners for membrane roofing system from same manufacturer as membrane roofing or approved by membrane roofing manufacturer.

D. Exterior Fire-Test Exposure: ASTM E 108, Class A; for application and roof slopes indicated, as determined by testing identical membrane roofing materials by a qualified testing agency. Materials shall be identified with appropriate markings of applicable testing agency.

E. Preinstallation Roofing Conference: Conduct conference at Project site.

1. Meet with Owner, Architect, Owner's insurer if applicable, testing and inspecting agency representative, roofing Installer, roofing system manufacturer's representative, deck

Installer, and installers whose work interfaces with or affects roofing, including installers of roof accessories and roof-mounted equipment.

2. Review methods and procedures related to roofing installation, including manufacturer's written instructions.
3. Review and finalize construction schedule and verify availability of materials, Installer's personnel, equipment, and facilities needed to make progress and avoid delays.
4. Examine deck substrate conditions and finishes for compliance with requirements, including flatness and fastening.
5. Review structural loading limitations of roof deck during and after roofing.
6. Review base flashings, special roofing details, roof drainage, roof penetrations, equipment curbs, and condition of other construction that will affect roofing system.
7. Review governing regulations and requirements for insurance and certificates if applicable.
8. Review temporary protection requirements for roofing system during and after installation.
9. Review roof observation and repair procedures after roofing installation.

1.7 DELIVERY, STORAGE, AND HANDLING

A. Deliver roofing materials to Project site in original containers with seals unbroken and labeled with manufacturer's name, product brand name and type, date of manufacture, approval or listing agency markings, and directions for storing and mixing with other components.

B. Store liquid materials in their original undamaged containers in a clean, dry, protected location and within the temperature range required by roofing system manufacturer. Protect stored liquid material from direct sunlight.

1. Discard and legally dispose of liquid material that cannot be applied within its stated shelf life.

C. Protect roof insulation materials from physical damage and from deterioration by sunlight, moisture, soiling, and other sources. Store in a dry location. Comply with insulation manufacturer's written instructions for handling, storing, and protecting during installation.

D. Handle and store roofing materials and place equipment in a manner to avoid permanent deflection of deck.

1.8 PROJECT CONDITIONS

A. Weather Limitations: Proceed with installation only when existing and forecasted weather conditions permit roofing system to be installed according to manufacturer's written instructions and warranty requirements.

1.9 WARRANTY

A. Special Warranty: Manufacturer's standard or customized form, without monetary limitation, in which manufacturer agrees to repair or replace components of membrane roofing system that fail in materials or workmanship within specified warranty period.

1. Special warranty includes membrane roofing, base flashings, roof insulation, fasteners, roofing accessories, and other components of membrane roofing system.
2. Warranty Period: 20 years from date of Substantial Completion.
3. Warranted Wind Speed: 90 MPH

B. Special Project Warranty: Submit roofing Installer's warranty, signed by Installer, covering the Work of this Section, including all components of membrane roofing system such as membrane roofing, base flashing, roof insulation, fasteners, cover boards, substrate boards, vapor retarders, roof pavers, and walkway products, for the following warranty period:

1. Warranty Period: Two years from date of Substantial Completion.

PART 2 - PRODUCTS

2.1 TPO MEMBRANE ROOFING

A. Fabric-Reinforced Thermoplastic Polyolefin Sheet: ASTM D 6878, internally fabric or scrim reinforced, uniform, flexible fabric backed TPO sheet.

1. Manufacturers: Subject to compliance with requirements, provide products by one of the following:

a. Carlisle SynTec Incorporated – basis of design
b. Firestone Building Products Company.
c. Johns Manville.
d. Prior Approved equals.

2. Thickness: 80 mils, nominal.
3. Exposed Face Color: White.

2.2 AUXILIARY MEMBRANE ROOFING MATERIALS

A. General: Auxiliary membrane roofing materials recommended by roofing system manufacturer for intended use, and compatible with membrane roofing.

1. Liquid-type auxiliary materials shall comply with VOC limits of authorities having jurisdiction.
2. Adhesives and sealants that are not on the exterior side of weather barrier shall comply with the following limits for VOC content when calculated according to 40 CFR 59, Subpart D (EPA Method 24):

a. Plastic Foam Adhesives: 50 g/L.
b. Contact Adhesive: 80 g/L.
c. Other Adhesives: 250 g/L.
d. Single-Ply Roof Membrane Sealants: 450 g/L.

B. Sheet Flashing: Manufacturer's standard unreinforced thermoplastic polyolefin sheet flashing, 55 mils (1.4 mm) thick, minimum, of same color as sheet membrane.

C. Bonding Adhesive: Manufacturer's standard, water based.

D. Slip Sheet: Manufacturer's standard, of thickness required for application.

E. Metal Termination Bars: Manufacturer's standard, predrilled stainless-steel or aluminum bars, approximately 1 by 1/8 inch (25 by 3 mm) thick; with anchors.

F. Metal Battens: Manufacturer's standard, aluminum-zinc-alloy-coated or zinc-coated steel sheet, approximately 1 inch wide by 0.05 inch thick (25 mm wide by 1.3 mm thick), prepunched.

G. Fasteners: Factory-coated steel fasteners and metal or plastic plates complying with corrosion-resistance provisions in FM Approvals 4470, designed for fastening membrane to substrate, and acceptable to membrane roofing system manufacturer.

H. Miscellaneous Accessories: Provide pourable sealers, preformed cone and vent sheet flashings, preformed inside and outside corner sheet flashings, T-joint covers, lap sealants, termination reglets, and other accessories.

2.3 ROOF INSULATION

A. General: Polyisocyanuarate thermal insulation in thicknesses shown by the membrane manufacturer or a manufacturer acceptable to the membrane manufacturer for the required system warranty

B. Polyisocyanurate Board Insulation: ASTM C 1289, Type II, Class I, Grade 2, felt or glass-fiber mat facer on both major surfaces.
   1. Available Manufacturers:
      a. Apache Products Company.
      b. Atlas Roofing Corporation.
      c. Carlisle SynTec Incorporated –basis of design
      d. Celotex Corporation.
      e. Firestone Building Products Company.
      f. GAF Materials Corporation.
      g. Johns Manville International, Inc.
      h. RMAX.
      i. Approved equals

2.4 Cover Board: High Density Polyisocyanurate board ASTM D1621, with premium coated glass facers and suitable for use in a fully adhered systems. Must be approved by membrane manufacturer for incorporation into the warranted Roof System.
   1. Carlisle Syn-tec SecurShield HD Plus – basis of design
   2. Approved equals

PART 3 - EXECUTION

3.1 EXAMINATION

A. Examine substrates, areas, and conditions, with Installer present, for compliance with the following requirements and other conditions affecting performance of roofing system:

   1. Verify that roof openings and penetrations are in place and curbs are set and braced and that roof drain bodies are securely clamped in place.

2. Verify that wood blocking, curbs, and nailers are securely anchored to roof deck at penetrations and terminations and that nailers match thicknesses of insulation.
3. Verify that surface plane flatness and fastening of steel roof deck complies with requirements in Division 05 Section "Steel Decking."

B. Proceed with installation only after unsatisfactory conditions have been corrected.

3.2 PREPARATION

A. Clean substrate of dust, debris, moisture, and other substances detrimental to roofing installation according to roofing system manufacturer's written instructions. Remove sharp projections.

B. Prevent materials from entering and clogging roof drains and conductors and from spilling or migrating onto surfaces of other construction. Remove roof-drain plugs when no work is taking place or when rain is forecast.

C. Complete terminations and base flashings and provide temporary seals to prevent water from entering completed sections of roofing system at the end of the workday or when rain is forecast. Remove and discard temporary seals before beginning work on adjoining roofing.

3.3 INSULATION INSTALLATION

A. Comply with membrane roofing system requirements for indicated insulation system and insulation manufacturer's written instructions for installing roof membrane to insulation system.
1. Adhered using adhesive as approved by the membrane manufacturer for incorporation into the Roofing System warranty.

3.4 ADHERED MEMBRANE ROOFING INSTALLATION

A. Adhere membrane roofing over area to receive roofing and install according to membrane roofing system manufacturer's written instructions.

B. Start installation of membrane roofing in presence of membrane roofing system manufacturer's technical personnel.

C. Accurately align membrane roofing and maintain uniform side and end laps of minimum dimensions required by manufacturer. Stagger end laps.

D. Bonding Adhesive: Apply to substrate and underside of membrane roofing at rate required by manufacturer and allow to partially dry before installing membrane roofing. Do not apply to splice area of membrane roofing.

E. In addition to adhering, mechanically fasten membrane roofing securely at terminations, penetrations, and perimeter of roofing.

F. Apply membrane roofing with side laps shingled with slope of substrate where possible.

G. Seams: Clean seam areas, overlap membrane roofing, and hot-air weld side and end laps of membrane roofing and sheet flashings according to manufacturer's written instructions to ensure a watertight seam installation.

1. Test lap edges with probe to verify seam weld continuity. Apply lap sealant to seal cut edges of sheet membrane.
2. Verify field strength of seams a minimum of twice daily and repair seam sample areas.
3. Repair tears, voids, and lapped seams in roofing that does not comply with requirements.

H. Spread sealant bed over deck drain flange at roof drains and securely seal membrane roofing in place with clamping ring.

3.5 BASE FLASHING INSTALLATION

A. Install sheet flashings and preformed flashing accessories and adhere to substrates according to membrane roofing system manufacturer's written instructions.

B. Apply bonding adhesive to substrate and underside of sheet flashing at required rate and allow to partially dry. Do not apply to seam area of flashing.

C. Flash penetrations and field-formed inside and outside corners with cured or uncured sheet flashing.

D. Clean seam areas, overlap, and firmly roll sheet flashings into the adhesive. Hot-air weld side and end laps to ensure a watertight seam installation.

E. Terminate and seal top of sheet flashings and mechanically anchor to substrate through termination bars.

3.6 FIELD QUALITY CONTROL

A. Final Roof Inspection: Arrange for roofing system manufacturer's technical personnel to inspect roofing installation on completion.

B. Repair or remove and replace components of membrane roofing system where inspections indicate that they do not comply with specified requirements.

C. Additional inspections, at Contractor's expense, will be performed to determine compliance of replaced or additional work with specified requirements.

3.7 PROTECTING AND CLEANING

A. Protect membrane roofing system from damage and wear during remainder of construction period. When remaining construction will not affect or endanger roofing, inspect roofing for deterioration and damage, describing its nature and extent in a written report, with copies to Architect and Owner.

B. Clean overspray and spillage from adjacent construction using cleaning agents and procedures recommended by manufacturer of affected construction.

END OF SECTION 07 54 23

SECTION 07 62 00 – SHEET METAL ROOF SPECIALTIES

PART 1 - GENERAL

1.1 RELATED DOCUMENTS

A. Drawings and general provisions of the Contract, including General and Supplementary Conditions and Division 01 Specification Sections, apply to this Section.

1.2 SUMMARY

A. Section Includes:

1. Copings.
2. Reglets and counterflashings.
3. Roof edge Gravel Stops and Scuppers at Vehicle Storage structure – Add Alt No.1

B. Related Requirements:

1. Division 06 Section 'Rough Carpentry' for treated wood blocking.
2. Division 07 Section 'Metal Soffit Panels'
3. Division 07 Section 'Thermoplastic Membrane Roofing.

1.3 ACTION SUBMITTALS

A. Product Data: For each type of product.

1. Include construction details, material descriptions, dimensions of individual components and profiles, and finishes.

B. Shop Drawings: For roof specialties.

1. Include plans, elevations, expansion-joint locations, keyed details, and attachments to other work. Distinguish between plant- and field-assembled work.
2. Include details for expansion and contraction; locations of expansion joints, including direction of expansion and contraction.
3. Indicate profile and pattern of seams and layout of fasteners, cleats, clips, and other attachments.
4. Detail termination points and assemblies, including fixed points.

C. Samples for Initial Selection: For each type of roof specialty indicated with factory-applied color finishes.

1.4 INFORMATIONAL SUBMITTALS

A. Qualification Data: For manufacturer.

B. Sample Warranty: For manufacturer's special warranty.

1.5 CLOSEOUT SUBMITTALS

A. Maintenance Data: For roofing specialties to include in maintenance manuals.

1.6 QUALITY ASSURANCE

A. Manufacturer Qualifications: A qualified manufacturer offering products meeting requirements that are FM Approvals listed for specified class.

B. Source Limitations: Obtain roof specialties approved by manufacturer providing roofing-system warranty specified in Section 07 54 00 Thermoplastic Membrane Roofing.

1.7 DELIVERY, STORAGE, AND HANDLING

A. Do not store roof specialties in contact with other materials that might cause staining, denting, or other surface damage. Store roof specialties away from uncured concrete and masonry.

B. Protect strippable protective covering on roof specialties from exposure to sunlight and high humidity, except to extent necessary for the period of roof-specialty installation.

1.8 FIELD CONDITIONS

A. Field Measurements: Verify profiles and tolerances of roof-specialty substrates by field measurements before fabrication, and indicate measurements on Shop Drawings.

B. Coordination: Coordinate roof specialties with flashing, trim, and construction of parapets, roof deck, roof and wall panels, and other adjoining work to provide a leakproof, secure, and noncorrosive installation.

1.9 WARRANTY

A. Special Warranty on Painted Finishes: Manufacturer agrees to repair finish or replace roof specialties that show evidence of deterioration of factory-applied finishes within specified warranty period.

1. Fluoropolymer Finish: Deterioration includes, but is not limited to, the following:

    a. Color fading more than 5 Hunter units when tested according to ASTM D 2244.
    b. Chalking in excess of a No. 8 rating when tested according to ASTM D 4214.
    c. Cracking, checking, peeling, or failure of paint to adhere to bare metal.

2. Finish Warranty Period: 20 years from date of Substantial Completion.

PART 2 - PRODUCTS

2.1 PERFORMANCE REQUIREMENTS

A. General Performance: Roof specialties shall withstand exposure to weather and resist thermally induced movement without failure, rattling, leaking, or fastener disengagement due to defective manufacture, fabrication, installation, or other defects in construction.

B. Recycled Content of Steel Products: Postconsumer recycled content plus one-half of preconsumer recycled content not less than 25 percent.

C. FM Approvals' Listing: Manufacture and install copings, roof-edge specialties that are listed in FM Approvals' "RoofNav" and approved for windstorm classification, Class 1-90.

D. Thermal Movements: Allow for thermal movements from ambient and surface temperature changes to prevent buckling, opening of joints, hole elongation, overstressing of components, failure of joint sealants, failure of connections, and other detrimental effects. Provide clips that resist rotation and avoid shear stress as a result of thermal movements. Base calculations on surface temperatures of materials due to both solar heat gain and nighttime-sky heat loss.

1. Temperature Change (Range): 120 deg F (67 deg C), ambient; 180 deg F (100 deg C), material surfaces.

2.2 COPINGS

A. Metal Copings: Manufactured coping system consisting of metal coping cap in section lengths not exceeding 12 feet (3.6 m), concealed anchorage; with corner units, end cap units, and concealed splice plates with finish matching coping caps.

1. Manufacturer: Basis of Design – OMG Edge Systems (formerly Hickman Co.)
   a. Approved Equals, including color to match

2. Metallic-Coated Steel Sheet Coping Caps: Zinc-coated (galvanized) steel, nominal 0.034-inch (0.86-mm) thickness.

   a. Surface: Smooth, flat finish.
   b. Finish: Two-coat fluoropolymer.
   c. Color: As selected by Architect from the Manufacturer’s full range of standard and premium colors.

3. Corners: Factory mitered and continuously welded.
4. Coping-Cap Attachment Method: Snap-on.

   a. Snap-on Coping Anchor Plates: Manufacturers Concealed, continuous galvanized-steel sheet.

2.3 ROOF-EDGE SPECIALTIES

A. Scuppers:

1. Zinc-Coated Steel: Nominal 0.028-inch (0.71-mm) thickness.

B. Counter Flashings and Gravel Stops: Manufactured units of heights to overlap top edges of base flashings by 4 inches (100 mm) and in lengths not exceeding 12 feet (3.6 m) designed to snap into reglets and compress against base flashings with joints lapped, from the following exposed metal:

1. Zinc-Coated Steel: Nominal 0.028-inch (0.71-mm) thickness.

C. Accessories:
1. Counterflashing Wind-Restraint Clips: Provide clips to be installed before counterflashing to prevent wind uplift of counterflashing lower edge.

2.4 MATERIALS

A. Zinc-Coated (Galvanized) Steel Sheet: ASTM A 653/A 653M, G90 (Z275) coating designation.

2.5 MISCELLANEOUS MATERIALS

A. Fasteners: Manufacturer's recommended fasteners, suitable for application and designed to meet performance requirements. Furnish the following unless otherwise indicated:
1. Fasteners for Zinc-Coated (Galvanized) Steel Sheet: Series 300 stainless steel or hot-dip zinc-coated steel according to ASTM A 153/A 153M or ASTM F 2329.

B. Elastomeric Sealant: ASTM C 920, elastomeric silicone polymer sealant of type, grade, class, and use classifications required by roofing-specialty manufacturer for each application.

2.6 FINISHES

A. Comply with NAAMM's "Metal Finishes Manual for Architectural and Metal Products" for recommendations for applying and designating finishes.

B. Protect mechanical and painted finishes on exposed surfaces from damage by applying a strippable, temporary protective covering before shipping.

C. Appearance of Finished Work: Noticeable variations in same piece are unacceptable. Variations in appearance of adjoining components are acceptable if they are within the range of approved Samples and are assembled or installed to minimize contrast.

D. Coil-Coated Galvanized-Steel Sheet Finishes:

1. High-Performance Organic Finish: Prepare, pretreat, and apply coating to exposed metal surfaces to comply with ASTM A 755/A 755M and coating and resin manufacturers' written instructions.

a. Two-Coat Fluoropolymer: AAMA 621. Fluoropolymer finish containing not less than 70 percent PVDF resin by weight in color coat. Prepare, pretreat, and apply coating to exposed metal surfaces to comply with coating and resin manufacturers' written instructions.

PART 3 - EXECUTION

3.1 EXAMINATION

A. Examine substrates, areas, and conditions, with Installer present, to verify actual locations, dimensions, and other conditions affecting performance of the Work.

B. Examine walls, roof edges, and parapets for suitable conditions for roof specialties.

C. Verify that substrate is sound, dry, smooth, clean, sloped for drainage where applicable, and securely anchored.

D. Proceed with installation only after unsatisfactory conditions have been corrected.

3.2 UNDERLAYMENT INSTALLATION

A. Slip Sheet (If Needed): Install with tape or adhesive for temporary anchorage to minimize use of mechanical fasteners under roof specialties. Apply in shingle fashion to shed water, with lapped joints of not less than 2 inches (50 mm).

3.3 INSTALLATION, GENERAL

A. General: Install roof specialties according to manufacturer's written instructions. Anchor roof specialties securely in place, with provisions for thermal and structural movement. Use fasteners, solder, protective coatings, separators, underlayments, sealants, and other miscellaneous items as required to complete roof-specialty systems.

1. Install roof specialties level, plumb, true to line and elevation; with limited oil-canning and without warping, jogs in alignment, buckling, or tool marks.
2. Provide uniform, neat seams with minimum exposure of solder and sealant.
3. Install roof specialties to fit substrates and to result in weathertight performance. Verify shapes and dimensions of surfaces to be covered before manufacture.
4. Torch cutting of roof specialties is not permitted.
5. Do not use graphite pencils to mark metal surfaces.

B. Expansion Provisions: Allow for thermal expansion of exposed roof specialties.

1. Space movement joints at a maximum of 12 feet (3.6 m) with no joints within 24 inches of corners or intersections unless otherwise indicated on Drawings.
2. When ambient temperature at time of installation is between 40 and 70 deg F (4 and 21 deg C), set joint members for 50 percent movement each way. Adjust setting proportionately for installation at higher ambient temperatures.

C. Fastener Sizes: Use fasteners of sizes that substrate not less than recommended by fastener manufacturer to achieve maximum pull-out resistance as required for Wind Rating indicated.

D. Seal concealed joints with butyl sealant as required by roofing-specialty manufacturer.

E. Seal joints as required for weathertight construction. Place sealant to be completely concealed in joint. Do not install sealants at temperatures below 40 deg F (4 deg C).

3.4 COPING INSTALLATION

A. Install cleats, anchor plates, and other anchoring and attachment accessories and devices with concealed fasteners.

B. Anchor copings with manufacturer's required devices, fasteners, and fastener spacing to meet performance requirements.

1. Interlock face and back leg drip edges of snap-on coping cap into continuous cleated anchor plates anchored to substrate at manufacturer's required spacing that meets performance requirements.

3.5 ROOF-EDGE DRAINAGE-SYSTEM INSTALLATION

A. General: Install components to produce a complete roof-edge drainage system according to manufacturer's written instructions or SMACNA standards. Coordinate installation of roof perimeter flashing with installation of roof-edge drainage system.

B. Scuppers: Install scuppers through Gravel Stop where indicated.

3.6 CLEANING AND PROTECTION

A. Clean exposed metal surfaces of substances that interfere with uniform oxidation and weathering.

B. Clean and neutralize flux materials. Clean off excess solder and sealants.

C. Remove temporary protective coverings and strippable films as roof specialties are installed. On completion of installation, clean finished surfaces, including removing unused fasteners, metal filings, pop rivet stems, and pieces of flashing. Maintain roof specialties in a clean condition during construction.

D. Replace roof specialties that have been damaged or that cannot be successfully repaired by finish touchup or similar minor repair procedures.

END OF SECTION 07 62 00

SECTION 07 72 00 - ROOF ACCESSORIES

PART 1 - GENERAL

1.1 RELATED DOCUMENTS

A. Drawings and general provisions of the Contract, including General and Supplementary Conditions and Division 01 Specification Sections, apply to this Section.

1.2 SUMMARY

A. This Section includes the following:
   1. Roof Hatches.
   2. Roof Hatch Ladder Up-TM Safety Post
   3. Roof Hatch Safety Rail/Gate

B. Related Sections include the following:

   1. Division 05 Section "Metal Fabrications" for metal vertical ladders, ships' ladders, and stairs for access to roof hatches.
   2. Division 06 Section "Rough Carpentry" for roof sheathing, wood cants, and wood nailers.
   3. Division 07 Section "Sheet Metal Flashing and Trim" for shop- and field-fabricated metal flashing and counterflashing, roof expansion-joint covers, and miscellaneous sheet metal trim and accessories.
   4. Division 07 Section "Roof Specialties" for fascia, copings, and gravel stops.

1.3 SUBMITTALS

A. Product Data: For each type of roof accessory indicated. Include construction details, material descriptions, dimensions of individual components and profiles, and finishes.

B. Shop Drawings: Show fabrication and installation details for roof accessories. Show layouts of roof accessories including plans and elevations. Indicate dimensions, weights, loadings, required clearances, method of field assembly, and components. Include plans, elevations, sections, details, and attachments to other work.

1.4 QUALITY ASSURANCE

A. Sheet Metal Standard: Comply with SMACNA's "Architectural Sheet Metal Manual" details for fabrication of units, including flanges and cap flashing to coordinate with type of roofing indicated.

1.5 DELIVERY, STORAGE, AND HANDLING

A. Pack, handle, and ship roof accessories properly labeled in heavy-duty packaging to prevent damage.

1.6 PROJECT CONDITIONS

A. Field Measurements: Verify required openings for each type of roof accessory by field measurements before fabrication and indicate measurements on Shop Drawings.

1.7 COORDINATION

A. Coordinate layout and installation of roof accessories with roofing membrane and base flashing and interfacing and adjoining construction to provide a leakproof, weathertight, secure, and noncorrosive installation.

PART 2 - PRODUCTS

2.1 MANUFACTURERS

A. Manufacturers: Subject to compliance with requirements, provide products by one of the manufacturers listed in other Part 2 articles.

2.2 METAL MATERIALS

A. Prepainted, Metallic-Coated Steel Sheet: Steel sheet metallic coated by hot-dip process and prepainted by coil-coating process to comply with ASTM A 755/A 755M.

1. Galvanized Steel Sheet: ASTM A 653/A 653M, G90 (Z275) coated.

2. Powder-Coat Finish: Immediately after cleaning and pretreating, electrostatically apply manufacturer's standard baked-polymer thermosetting powder finish. Comply with resin manufacturer's written instructions for application, baking, and minimum dry film thickness.

a. Color and Gloss: As selected by Architect from manufacturer's full range.

2.3 ROOF HATCHES

A. Roof Hatches: Fabricate roof hatches with insulated double-wall lids and insulated single -wall curb frame with integral deck mounting flange and lid frame counterflashing. Fabricate with welded or mechanically fastened and sealed corner joints. Provide continuous weathertight perimeter gasketing and equip with corrosion-resistant or hot-dip galvanized hardware.

1. Available Manufacturers:
a. Bilco - Company Basis of Design.

b. Milcor Inc.; a Gibraltar Company.
c. Nystrom, Inc.
d. O'Keeffe's Inc.
e. ThyCurb; Div of Thybar Corporation.
f. Prior approved equals**.**

2. Loads: Fabricate roof hatches to withstand 40-lbf/sq. ft. (1.9-kPa) external and 20-lbf/sq. ft. (0.95-kPa) internal loads.
3. Type and Size: Single-leaf lid, 30 by 36 inches (750 by 900 mm) 30 by 96 inches (750 by 2440 mm).
4. Curb and Lid Material: Galvanized steel sheet, 0.079 inch (2.0 mm) thick.

   a. Finish: Powder coat.

5. Insulation: Glass-fiber board.
6. Interior Lid Liner: Manufacturer's standard metal liner of same material and finish as outer metal lid.
7. Exterior Curb Liner: Manufacturer's standard metal liner of same material and finish as metal curb.
8. Fabricate units to minimum height of 12 inches (300 mm), unless otherwise indicated.
9. Hardware: Galvanized steel spring latch with turn handles, butt- or pintle-type hinge system, and padlock hasps inside and outside.
10. Ladder Safety Post: Manufacturer's standard ladder safety post. Post to lock in place on full extension. Provide release mechanism to return post to closed position.
    a. Height: 42 inches (1060 mm) above finished roof deck.
    b. Material and Finish: Steel tube, baked enameled.
    c. Diameter: Pipe with 1-5/8-inch (41-mm) OD tube.
11. Roof Hatch Safety Rail/Gate for mounting directly to Roof Hatch Unit.
    a. Bil-Guard 2.0 or approved equal
    b. Comply with OSHA 29 CFR 1910.23
    c. Material and Finish: Aluminum 1-1/4” Schedule 40 with Safety Yellow Powder Coat. Aluminum or Stainless Steel fittings and Hardware.

PART 3 - EXECUTION

3.1 EXAMINATION

A. Examine substrates, areas, and conditions, with Installer present, to verify actual locations, dimensions, and other conditions affecting performance of work.

   1. Verify that substrate is sound, dry, smooth, clean, sloped for drainage, and securely anchored and is ready to receive roof accessories.
   2. Verify dimensions of roof openings for roof accessories.
   3. Proceed with installation only after unsatisfactory conditions have been corrected.

3.2 INSTALLATION

A. General: Install roof accessories according to manufacturer's written instructions. Anchor roof accessories securely in place and capable of resisting forces specified. Use fasteners, separators, sealants, and other miscellaneous items as required for completing roof accessory installation. Install roof accessories to resist exposure to weather without failing, rattling, leaking, and fastener disengagement.

B. Install roof accessories to fit substrates and to result in watertight performance.

C. Metal Protection: Where dissimilar metals will contact each other or corrosive substrates, protect against galvanic action by painting contact surfaces with bituminous coating or by other permanent separation as recommended by manufacturer.
   1. Bed flanges in thick coat of asphalt roofing cement where required by roof accessory manufacturers for waterproof performance.

D. Install roof accessories level, plumb, true to line and elevation, and without warping, jogs in alignment, excessive oil canning, buckling, or tool marks.

E. Roof Hatch Installation:

   1. Check roof hatch for proper operation. Adjust operating mechanism as required. Clean and lubricate joints and hardware.
   2. Attach safety railing system to roof hatch curb.
   3. Attach ladder safety post according to manufacturer's written instructions.

3.3 CLEANING

A. Clean exposed surfaces according to manufacturer's written instructions.

END OF SECTION 07 72 00

SECTION 07 92 00 - JOINT SEALANTS

PART 1 - GENERAL

1.1 RELATED DOCUMENTS

A. Drawings and general provisions of the Contract, including General and Supplementary Conditions and Division 01 Specification Sections, apply to this Section.

1.2 SUMMARY

A. Section Includes:

1. Silicone joint sealants.
2. Urethane joint sealants.
3. Latex joint sealants.
4. Acoustical joint sealants.

B. Related Sections:

1. Division 07 Section “Metal Wall Panels”
2. Division 08 Section "Hollow Metal Doors and Frames”
3. Division 09 Section "Gypsum Board" for sealing perimeter joints.
4. Division 09 Section "Acoustical Panel Ceilings" for sealing edge moldings at perimeters with acoustical sealant.
5. Division 23 Section “Plumbing Fixtures” for sealing fixture to wall finish
6. Division 32 Section “Concrete Paving”

1.3 SUBMITTALS

A. Product Data: For each joint-sealant product indicated.

B. Samples for Initial Selection: Manufacturer's color charts consisting of strips of cured sealants showing the full range of colors available for each product exposed to view.

C. Samples for Verification: For each kind and color of joint sealant required, provide Samples with joint sealants in 1/2-inch- (13-mm-) wide joints formed between two 6-inch- (150-mm-) long strips of material matching the appearance of exposed surfaces adjacent to joint sealants.

D. Joint-Sealant Schedule: Include the following information:

1. Joint-sealant application, joint location, and designation.
2. Joint-sealant manufacturer and product name.
3. Joint-sealant formulation.
4. Joint-sealant color.

1.4 QUALITY ASSURANCE

A. Installer Qualifications: Manufacturer's authorized representative who is trained and approved for installation of units required for this Project.

B. Source Limitations: Obtain each kind of joint sealant from single source from single manufacturer.

1.5 PROJECT CONDITIONS

A. Do not proceed with installation of joint sealants under the following conditions:

1. When ambient and substrate temperature conditions are outside limits permitted by joint-sealant manufacturer or are below 40 deg F (5 deg C).
2. When joint substrates are wet.
3. Where joint widths are less than those allowed by joint-sealant manufacturer for applications indicated.
4. Where contaminants capable of interfering with adhesion have not yet been removed from joint substrates.

1.6 WARRANTY

A. Special Installer's Warranty: Manufacturer's standard form in which Installer agrees to repair or replace joint sealants that do not comply with performance and other requirements specified in this Section within specified warranty period.

1. Warranty Period: Two years from date of Substantial Completion.

PART 2 - PRODUCTS

2.1 MATERIALS, GENERAL

A. Compatibility: Provide joint sealants, backings, and other related materials that are compatible with one another and with joint substrates under conditions of service and application, as demonstrated by joint-sealant manufacturer, based on testing and field experience.

2.2 SILICONE JOINT SEALANTS

A. Single-Component, Nonsag, Neutral-Curing Silicone Joint Sealant: ASTM C 920, Type S, Grade NS, Class 100/50, for Use NT.

1. Products: Subject to compliance with requirements, available products that may be incorporated into the Work include, but are not limited to, the following:

a. Dow Corning Corporation; 790.
b. GE Advanced Materials - Silicones; SilPruf LM SCS2700.
c. Pecora Corporation; 890.
d. Sika Corporation, Construction Products Division; SikaSil-C990.
e. Tremco Incorporated; Spectrem 1.
f. Prior approved equals.

B. Mildew-Resistant, Single-Component, Acid-Curing Silicone Joint Sealant: ASTM C 920, Type S, Grade NS, Class 25, for Use NT.

1. Products: Subject to compliance with requirements, available products that may be incorporated into the Work include, but are not limited to, the following:

a. BASF Building Systems; Omniplus.

b. Dow Corning Corporation; 786 Mildew Resistant.
c. GE Advanced Materials - Silicones; Sanitary SCS1700.
d. Tremco Incorporated; Tremsil 200 Sanitary.

2.3 URETHANE JOINT SEALANTS

A. Multicomponent, Nonsag, Traffic-Grade, Urethane Joint Sealant: ASTM C 920, Type M, Grade NS, Class 25, for Use T (Exterior concrete paving).

1. Products: Subject to compliance with requirements, provide one of the following:
a. Pecora Corporation; Dynatred.
b. Sika Corporation, Construction Products Division; Sikaflex - 2c NS.
c. Tremco Incorporated; Vulkem 227.
d. Approved equals.

2.4 LATEX JOINT SEALANTS

A. Latex Joint Sealant: Acrylic latex or siliconized acrylic latex, ASTM C 834, Type OP, Grade NF.

1. Products: Subject to compliance with requirements, available products that may be incorporated into the Work include, but are not limited to, the following:

a. BASF Building Systems; Sonolac.
b. Bostik, Inc.; Chem-Calk 600.
c. Pecora Corporation; AC-20+.
d. Tremco Incorporated; Tremflex 834.
e. Prior approved equals.

2.5 ACOUSTICAL JOINT SEALANTS

A. Acoustical Joint Sealant: Manufacturer's standard nonsag, paintable, nonstaining latex sealant complying with ASTM C 834. Product effectively reduces airborne sound transmission through perimeter joints and openings in building construction as demonstrated by testing representative assemblies according to ASTM E 90.

1. Products: Subject to compliance with requirements, available products that may be incorporated into the Work include, but are not limited to, the following:

a. Pecora Corporation; AC-20 FTR.
b. USG Corporation; SHEETROCK Acoustical Sealant.
c. Prior approved equals.

2.6 JOINT SEALANT BACKING

A. General: Provide sealant backings of material that are nonstaining; are compatible with joint substrates, sealants, primers, and other joint fillers; and are approved for applications indicated by sealant manufacturer based on field experience and laboratory testing.

B. Cylindrical Sealant Backings: ASTM C 1330, Type C (closed-cell material with a surface skin) Type O (open-cell material) or any of the preceding types, as approved in writing by joint-

sealant manufacturer for joint application indicated, and of size and density to control sealant depth and otherwise contribute to producing optimum sealant performance.

C. Bond-Breaker Tape: Polyethylene tape or other plastic tape recommended by sealant manufacturer for preventing sealant from adhering to rigid, inflexible joint-filler materials or joint surfaces at back of joint. Provide self-adhesive tape where applicable.

2.7 MISCELLANEOUS MATERIALS

A. Cleaners for Nonporous Surfaces: Chemical cleaners acceptable to manufacturers of sealants and sealant backing materials, free of oily residues or other substances capable of staining or harming joint substrates and adjacent nonporous surfaces in any way, and formulated to promote optimum adhesion of sealants to joint substrates.

B. Masking Tape: Nonstaining, nonabsorbent material compatible with joint sealants and surfaces adjacent to joints.

PART 3 - EXECUTION

3.1 EXAMINATION

A. Examine joints indicated to receive joint sealants, with Installer present, for compliance with requirements for joint configuration, installation tolerances, and other conditions affecting joint-sealant performance.

B. Proceed with installation only after unsatisfactory conditions have been corrected.

3.2 PREPARATION

A. Surface Cleaning of Joints: Clean out joints immediately before installing joint sealants to comply with joint-sealant manufacturer's written instructions and the following requirements:

1. Remove all foreign material from joint substrates that could interfere with adhesion of joint sealant, including dust, paints (except for permanent, protective coatings tested and approved for sealant adhesion and compatibility by sealant manufacturer), old joint sealants, oil, grease, waterproofing, water repellents, water, surface dirt, and frost.
2. Clean porous joint substrate surfaces by brushing, grinding, mechanical abrading, or a combination of these methods to produce a clean, sound substrate capable of developing optimum bond with joint sealants. Remove loose particles remaining after cleaning operations above by vacuuming or blowing out joints with oil-free compressed air. Porous joint substrates include the following:
   a. Concrete.
   b. Masonry.
   c. Unglazed surfaces of ceramic tile.
   d. Exterior insulation and finish systems.
3. Remove laitance and form-release agents from concrete.
4. Clean nonporous joint substrate surfaces with chemical cleaners or other means that do not stain, harm substrates, or leave residues capable of interfering with adhesion of joint sealants. Nonporous joint substrates include the following:

a. Metal.
b. Glass.
c. Glazed surfaces of ceramic tile.

B. Joint Priming: Prime joint substrates where recommended by joint-sealant manufacturer or as indicated by preconstruction joint-sealant-substrate tests or prior experience. Apply primer to comply with joint-sealant manufacturer's written instructions. Confine primers to areas of joint-sealant bond; do not allow spillage or migration onto adjoining surfaces.

C. Masking Tape: Use masking tape where required to prevent contact of sealant or primer with adjoining surfaces that otherwise would be permanently stained or damaged by such contact or by cleaning methods required to remove sealant smears. Remove tape immediately after tooling without disturbing joint seal.

3.3 INSTALLATION OF JOINT SEALANTS

A. General: Comply with joint-sealant manufacturer's written installation instructions for products and applications indicated, unless more stringent requirements apply.

B. Sealant Installation Standard: Comply with recommendations in ASTM C 1193 for use of joint sealants as applicable to materials, applications, and conditions indicated.

C. Install sealant backings of kind indicated to support sealants during application and at position required to produce cross-sectional shapes and depths of installed sealants relative to joint widths that allow optimum sealant movement capability.

1. Do not leave gaps between ends of sealant backings.
2. Do not stretch, twist, puncture, or tear sealant backings.
3. Remove absorbent sealant backings that have become wet before sealant application and replace them with dry materials.

D. Install bond-breaker tape behind sealants where sealant backings are not used between sealants and backs of joints.

E. Install sealants using proven techniques that comply with the following and at the same time backings are installed:

1. Place sealants so they directly contact and fully wet joint substrates.
2. Completely fill recesses in each joint configuration.
3. Produce uniform, cross-sectional shapes and depths relative to joint widths that allow optimum sealant movement capability.

F. Tooling of Nonsag Sealants: Immediately after sealant application and before skinning or curing begins, tool sealants according to requirements specified in subparagraphs below to form smooth, uniform beads of configuration indicated; to eliminate air pockets; and to ensure contact and adhesion of sealant with sides of joint.

1. Remove excess sealant from surfaces adjacent to joints.
2. Use tooling agents that are approved in writing by sealant manufacturer and that do not discolor sealants or adjacent surfaces.
3. Provide concave joint profile per Figure 8A in ASTM C 1193, unless otherwise indicated.

G. Acoustical Sealant Installation: At sound-rated assemblies and elsewhere as indicated, seal construction at perimeters, behind control joints, and at openings and penetrations with a continuous bead of acoustical sealant. Install acoustical sealant at both faces of partitions at perimeters and through penetrations. Comply with ASTM C 919 and with manufacturer's written recommendations.

3.4 CLEANING

A. Clean off excess sealant or sealant smears adjacent to joints as the Work progresses by methods and with cleaning materials approved in writing by manufacturers of joint sealants and of products in which joints occur.

3.5 PROTECTION

A. Protect joint sealants during and after curing period from contact with contaminating substances and from damage resulting from construction operations or other causes so sealants are without deterioration or damage at time of Substantial Completion. If, despite such protection, damage or deterioration occurs, cut out and remove damaged or deteriorated joint sealants immediately so installations with repaired areas are indistinguishable from original work.

3.6 JOINT-SEALANT SCHEDULE

A. Joint-Sealant Application: Exterior joints in horizontal traffic surfaces.

1. Joint Locations:
   a. Isolation and contraction joints in cast-in-place concrete slabs.
   b. Joints between different materials listed above.
2. Urethane Joint Sealant: Multicomponent, nonsag, traffic grade, Class 25.
3. Joint-Sealant Color: Match Architect's sample] As selected by Architect from manufacturer's full range of colors.

B. Joint-Sealant Application: Exterior joints in vertical surfaces and horizontal nontraffic surfaces.

1. Joint Locations:
   a. Joints between metal panels.
   b. Joints between different materials listed above.
   c. Perimeter joints between materials listed above and frames of doors windows and louvers.
2. Silicone Joint Sealant: Single component, nonsag, neutral curing, Class 100/50**.**
3. Joint-Sealant Color: As selected by Architect from manufacturer's full range of colors.

C. Joint-Sealant Application: Interior joints in horizontal traffic surfaces.

1. Joint Locations:
   a. Isolation joints in cast-in-place concrete slabs.
2. Silicone Joint Sealant: Multicomponent, pourable, traffic grade, neutral curing.
3. Joint-Sealant Color: Match Architect's sample.

D. Joint-Sealant Application: Interior joints in vertical surfaces and horizontal nontraffic surfaces.

1. Joint Locations:

a. Control and expansion joints on exposed interior surfaces of exterior walls.
b. Perimeter joints of exterior openings where indicated.
c. Perimeter joints between interior wall surfaces and frames of interior doors windows and elevator entrances.

2. Joint Sealant: Silicone Joint Sealant: Single component, nonsag, neutral curing, Class 100/50**.**
3. Joint-Sealant Color: As selected by Architect from manufacturer's full range of colors.

E. Joint-Sealant Application: Mildew-resistant interior joints in vertical surfaces and horizontal nontraffic surfaces.

1. Joint Sealant Location:

a. Joints between plumbing fixtures and adjoining walls, floors, and counters.
b. Tile control and expansion joints where indicated.

2. Joint Sealant: Mildew resistant, single component, nonsag, neutral curing, Silicone.
3. Joint-Sealant Color: As selected by Architect from manufacturer's full range of colors.

F. Joint-Sealant Application: Interior acoustical joints in vertical surfaces and horizontal nontraffic surfaces.

1. Joint Location:

a. Acoustical joints where indicated.

2. Joint Sealant: Acoustical.
3. Joint-Sealant Color: As selected by Architect from manufacturer's full range.

END OF SECTION 079200

SECTION 08 11 13 - HOLLOW METAL DOORS AND FRAMES

PART 1 - GENERAL

1.1 RELATED DOCUMENTS

A. Drawings and general provisions of the Contract, including General and Supplementary Conditions and Division 01 Specification Sections, apply to this Section.

1.2 SUMMARY

A. Section includes hollow-metal work, doors and frames, and interior window frames

B. Related Requirements:

1. Section 087100 "Door Hardware for door hardware for hollow-metal doors.

1.3 DEFINITIONS

A. Minimum Thickness: Minimum thickness of base metal without coatings according to NAAMM-HMMA 803 or SDI A250.8.

1.4 COORDINATION

A. Coordinate anchorage installation for hollow-metal frames. Furnish setting drawings, templates, and directions for installing anchorages, including sleeves, concrete inserts, anchor bolts, and items with integral anchors. Deliver such items to Project site in time for installation.

1.5 ACTION SUBMITTALS

A. Product Data: For each type of product.

1. Include construction details, material descriptions, core descriptions, fire-resistance ratings, and finishes.

B. Shop Drawings: Include the following:

1. Elevations of each door type.
2. Details of doors, including vertical- and horizontal-edge details and metal thicknesses.
3. Frame details for each frame type, including dimensioned profiles and metal thicknesses.
4. Locations of reinforcement and preparations for hardware.
5. Details of each different wall opening condition.
6. Details of anchorages, joints, field splices, and connections.
7. Details of accessories.
8. Details of moldings, removable stops, and glazing.
9. Details of conduit and preparations for power, signal, and control systems.

C. Schedule: Provide a schedule of hollow-metal work prepared by or under the supervision of supplier, using same reference numbers for details and openings as those on Drawings. Coordinate with final Door Hardware Schedule.

1.6 DELIVERY, STORAGE, AND HANDLING

A. Deliver hollow-metal work palletized, packaged, or crated to provide protection during transit and Project-site storage. Do not use non-vented plastic.

1. Provide additional protection to prevent damage to factory-finished units.

B. Deliver welded frames with two removable spreader bars across bottom of frames, tack welded to jambs and mullions.

C. Store hollow-metal work vertically under cover at Project site with head up. Place on minimum 4-inch- (102-mm-) high wood blocking. Provide minimum 1/4-inch (6-mm) space between each stacked door to permit air circulation.

PART 2 - PRODUCTS

2.1 MANUFACTURERS

A. Manufacturers: Subject to compliance with requirements, available manufacturers offering products that may be incorporated into the Work include, but are not limited to, the following:

1. Amweld International, LLC.
2. Ceco Door Products; an Assa Abloy Group company.
3. Commercial Door & Hardware Inc.
4. Curries Company; an Assa Abloy Group company.
5. Custom Metal Products.
6. Gensteel Doors Inc.
7. Hollow Metal Inc.
8. National Custom Hollow Metal.
9. Premier Products, Inc.
10. Republic Doors and Frames.
11. Rocky Mountain Metals, Inc.
12. Steelcraft; an Ingersoll-Rand company.
13. Approved equals.

B. Source Limitations: Obtain hollow-metal work from single source from single manufacturer.

2.2 INTERIOR DOORS AND FRAMES

A. Construct interior doors and frames to comply with the standards indicated for materials, fabrication, hardware locations, hardware reinforcement, tolerances, and clearances, and as specified.

B. Heavy-Duty Doors and Frames: SDI A250.8, Level 2. At interior locations.

1. Physical Performance: Level B according to SDI A250.4.
2. Doors:

a. Type: As indicated in the Door and Frame Schedule.
b. Thickness: 1-3/4 inches (44.5 mm).

c. Face: Uncoated, cold-rolled steel sheet, minimum thickness of 0.042 inch (1.0 mm).
d. Edge Construction: Model 1, Full Flush.
e. Core: Manufacturer's standard kraft-paper honeycomb, polystyrene, polyurethane, polyisocyanurate, mineral-board, or vertical steel-stiffener core at manufacturer's discretion.

3. Frames:

a. Materials: Uncoated steel sheet, minimum thickness of 0.053 inch (1.3 mm).
b. Construction: Full profile welded.

4. Exposed Finish: Prime.

2.3 FRAME ANCHORS

A. Jamb Anchors:

1. Stud-Wall Type: Designed to engage stud, welded to back of frames; not less than 0.042 inch (1.0 mm) thick.

B. Floor Anchors: Formed from same material as frames, minimum thickness of 0.042 inch (1.0 mm), and as follows:

1. Monolithic Concrete Slabs: Clip-type anchors, with two holes to receive fasteners.

2.4 EXTERIOR HOLLOW-METAL DOORS AND FRAMES

A. Construct exterior doors and frames to comply with the standards indicated for materials, fabrication, hardware locations, hardware reinforcement, tolerances, and clearances, and as specified.

B. Extra-Heavy-Duty Doors and Frames: SDI A250.8, Level 3. At Exterior locations.

1. Physical Performance: Level A according to SDI A250.4.
2. Doors:

a. Type: As indicated in the Door and Frame Schedule.
b. Thickness: 1-3/4 inches (44.5 mm.)
c. Face: Metallic-coated steel sheet, minimum thickness of 0.053 inch (1.3 mm), with minimum A40 (ZF120) coating.
d. Edge Construction: Model 2, Seamless.
e. Core: Manufacturer's standard, polystyrene, polyurethane, polyisocyanurate, mineral-board, or vertical steel-stiffener core at manufacturer's discretion.

1) Thermal-Rated Doors: Provide doors fabricated with thermal-resistance value (R-value) of not less than 2.1 deg F x h x sq. ft./Btu (0.370 K x sq. m/W) when tested according to ASTM C 1363.

3. Frames:

a. Materials: Metallic-coated steel sheet, minimum thickness of 0.053 inch (1.3 mm), with minimum A40 (ZF120) coating.
b. Construction: Full profile welded.

4. Exposed Finish: Prime.

2.5 FRAME ANCHORS

A. Jamb Anchors:

1. Stud-Wall Type: Designed to engage stud, welded to back of frames; not less than 0.042 inch (1.0 mm) thick.

B. Floor Anchors: Formed from same material as frames, minimum thickness of 0.042 inch (1.0 mm), and as follows:

1. Monolithic Concrete Slabs: Clip-type anchors, with two holes to receive fasteners.
2. Separate Topping Concrete Slabs: Adjustable-type anchors with extension clips, allowing not less than 2-inch (51-mm) height adjustment. Terminate bottom of frames at finish floor surface.

2.6 MATERIALS

A. Recycled Content of Steel Products: Postconsumer recycled content plus one-half of preconsumer recycled content not less than 25 percent.

B. Cold-Rolled Steel Sheet: ASTM A 1008/A 1008M, Commercial Steel (CS), Type B; suitable for exposed applications.

C. Frame Anchors: ASTM A 879/A 879M, Commercial Steel (CS), 04Z (12G) coating designation; mill phosphatized.

1. For anchors built into exterior walls, steel sheet complying with ASTM A 1008/A 1008M or ASTM A 1011/A 1011M, hot-dip galvanized according to ASTM A 153/A 153M, Class B.

D. Inserts, Bolts, and Fasteners: Hot-dip galvanized according to ASTM A 153/A 153M.

E. Power-Actuated Fasteners in Concrete: Fastener system of type suitable for application indicated, fabricated from corrosion-resistant materials, with clips or other accessory devices for attaching hollow-metal frames of type indicated.

F. Grout: ASTM C 476, except with a maximum slump of 4 inches (102 mm), as measured according to ASTM C 143/C 143M.

G. Mineral-Fiber Insulation: ASTM C 665, Type I (blankets without membrane facing); consisting of fibers manufactured from slag or rock wool; with maximum flame-spread and smoke-developed indexes of 25 and 50, respectively; passing ASTM E 136 for combustion characteristics.

H. Glazing: Comply with requirements in Section 088000 "Glazing."

I. Bituminous Coating: Cold-applied asphalt mastic, compounded for 15-mil (0.4-mm) dry film thickness per coat. Provide inert-type noncorrosive compound free of asbestos fibers, sulfur components, and other deleterious impurities.

2.7 FABRICATION

A. Fabricate hollow-metal work to be rigid and free of defects, warp, or buckle. Accurately form metal to required sizes and profiles, with minimum radius for metal thickness. Where practical, fit and assemble units in manufacturer's plant. To ensure proper assembly at Project site, clearly identify work that cannot be permanently factory assembled before shipment.

B. Hollow-Metal Frames: Where frames are fabricated in sections due to shipping or handling limitations, provide alignment plates or angles at each joint, fabricated of same thickness metal as frames.

1. Sidelight Frames: Provide closed tubular members with no visible face seams or joints, fabricated from same material as door frame. Fasten members at crossings and to jambs by butt welding.
2. Provide countersunk, flat- or oval-head exposed screws and bolts for exposed fasteners unless otherwise indicated.
3. Grout Guards: Weld guards to frame at back of hardware mortises in frames to be grouted.
4. Floor Anchors: Weld anchors to bottoms of jambs with at least four spot welds per anchor; however, for slip-on drywall frames, provide anchor clips or countersunk holes at bottoms of jambs.
5. Jamb Anchors: Provide number and spacing of anchors as follows:

   a. Stud-Wall Type: Locate anchors not more than 18 inches (457 mm) from top and bottom of frame. Space anchors not more than 32 inches (813 mm) o.c. and as follows:

      1) Three anchors per jamb up to 60 inches (1524 mm) high.
      2) Four anchors per jamb from 60 to 90 inches (1524 to 2286 mm) high.
      3) Five anchors per jamb from 90 to 96 inches (2286 to 2438 mm) high.
      4) Five anchors per jamb plus one additional anchor per jamb for each 24 inches (610 mm) or fraction thereof above 96 inches (2438 mm) high.

   b. Postinstalled Expansion Type: Locate anchors not more than 6 inches (152 mm) from top and bottom of frame. Space anchors not more than 26 inches (660 mm) o.c.
6. Door Silencers: Except on weather-stripped frames, drill stops to receive door silencers as follows. Keep holes clear during construction.

   a. Single-Door Frames: Drill stop in strike jamb to receive three door silencers.
   b. Double-Door Frames: Drill stop in head jamb to receive two door silencers.

C. Fabricate concealed stiffeners and edge channels from either cold- or hot-rolled steel sheet.

D. Hardware Preparation: Factory prepare hollow-metal work to receive templated mortised hardware; include cutouts, reinforcement, mortising, drilling, and tapping according to SDI A250.6, the Door Hardware Schedule, and templates.

1. Reinforce doors and frames to receive nontemplated, mortised, and surface-mounted door hardware.
2. Comply with applicable requirements in SDI A250.6 and BHMA A156.115 for preparation of hollow-metal work for hardware.

E. Stops and Moldings: Provide stops and moldings around glazed lites and louvers where indicated. Form corners of stops and moldings with butted or mitered hairline joints.

1. Single Glazed Lites: Provide fixed stops and moldings welded on secure side of hollow-metal work.
2. Multiple Glazed Lites: Provide fixed and removable stops and moldings so that each glazed lite is capable of being removed independently.
3. Provide fixed frame moldings on outside of exterior and on secure side of interior doors and frames.
4. Provide loose stops and moldings on inside of hollow-metal work.
5. Coordinate rabbet width between fixed and removable stops with glazing and installation types indicated.

2.8 STEEL FINISHES

A. Prime Finish: Clean, pretreat, and apply manufacturer's standard primer.

1. Shop Primer: Manufacturer's standard, fast-curing, lead- and chromate-free primer complying with SDI A250.10; recommended by primer manufacturer for substrate; compatible with substrate and field-applied coatings despite prolonged exposure.

PART 3 - EXECUTION

3.1 EXAMINATION

A. Examine substrates, areas, and conditions, with Installer present, for compliance with requirements for installation tolerances and other conditions affecting performance of the Work.

B. Examine roughing-in for embedded and built-in anchors to verify actual locations before frame installation.

C. Proceed with installation only after unsatisfactory conditions have been corrected.

3.2 PREPARATION

A. Remove welded-in shipping spreaders installed at factory. Restore exposed finish by grinding, filling, and dressing, as required to make repaired area smooth, flush, and invisible on exposed faces.

B. Drill and tap doors and frames to receive non-templated, mortised, and surface-mounted door hardware.

C. Grout all door frames solid. Window frames, grouting not required unless otherwise noted.

3.3 INSTALLATION

A. General: Install hollow-metal work plumb, rigid, properly aligned, and securely fastened in place. Comply with Drawings and manufacturer's written instructions.

B. Hollow-Metal Frames: Install hollow-metal frames of size and profile indicated. Comply with SDI A250.11 or NAAMM-HMMA 840 as required by standards specified.

1. Set frames accurately in position; plumbed, aligned, and braced securely until permanent anchors are set. After wall construction is complete, remove temporary braces, leaving surfaces smooth and undamaged.

a. At fire-rated openings, install frames according to NFPA 80.
b. Where frames are fabricated in sections because of shipping or handling limitations, field splice at approved locations by welding face joint continuously; grind, fill, dress, and make splice smooth, flush, and invisible on exposed faces.
c. Install frames with removable stops located on secure side of opening.
d. Install door silencers in frames before grouting.
e. Remove temporary braces necessary for installation only after frames have been properly set and secured.
f. Check plumb, square, and twist of frames as walls are constructed. Shim as necessary to comply with installation tolerances.
g. Field apply bituminous coating to backs of frames that will be filled with grout containing antifreezing agents.

2. Floor Anchors: Provide floor anchors for each jamb and mullion that extends to floor, and secure with postinstalled expansion anchors.

a. Floor anchors may be set with power-actuated fasteners instead of postinstalled expansion anchors if so indicated and approved on Shop Drawings.

3. Installation Tolerances: Adjust hollow-metal door frames for squareness, alignment, twist, and plumb to the following tolerances:

a. Squareness: Plus or minus 1/16 inch (1.6 mm), measured at door rabbet on a line 90 degrees from jamb perpendicular to frame head.
b. Alignment: Plus or minus 1/16 inch (1.6 mm), measured at jambs on a horizontal line parallel to plane of wall.
c. Twist: Plus or minus 1/16 inch (1.6 mm), measured at opposite face corners of jambs on parallel lines, and perpendicular to plane of wall.
d. Plumbness: Plus or minus 1/16 inch (1.6 mm), measured at jambs at floor.

C. Hollow-Metal Doors: Fit hollow-metal doors accurately in frames, within clearances specified below. Shim as necessary.

1. Non-Fire-Rated Steel Doors:

a. Between Door and Frame Jambs and Head: 1/8 inch (3.2 mm) plus or minus 1/32 inch (0.8 mm).

b. Between Edges of Pairs of Doors: 1/8 inch (3.2 mm) to 1/4 inch (6.3 mm) plus or minus 1/32 inch (0.8 mm).
c. At Bottom of Door: 3/4 inch (19.1 mm) plus or minus 1/32 inch (0.8 mm).
d. Between Door Face and Stop: 1/16 inch (1.6 mm) to 1/8 inch (3.2 mm) plus or minus 1/32 inch (0.8 mm).

2. Fire-Rated Doors: Install doors with clearances according to NFPA 80.
3. Smoke-Control Doors: Install doors and gaskets according to NFPA 105.

D. Glazing: Comply with installation requirements in Section 088000 "Glazing" and with hollow-metal manufacturer's written instructions.

1. Secure stops with countersunk flat- or oval-head machine screws spaced uniformly not more than 9 inches (230 mm) o.c. and not more than 2 inches (51 mm) o.c. from each corner.

3.4 ADJUSTING AND CLEANING

A. Final Adjustments: Check and readjust operating hardware items immediately before final inspection. Leave work in complete and proper operating condition. Remove and replace defective work, including hollow-metal work that is warped, bowed, or otherwise unacceptable.

B. Remove grout and other bonding material from hollow-metal work immediately after installation.

C. Prime-Coat Touchup: Immediately after erection, sand smooth rusted or damaged areas of prime coat and apply touchup of compatible air-drying, rust-inhibitive primer.

D. Touchup Painting: Cleaning and touchup painting of abraded areas of paint are specified in painting Sections.

END OF SECTION 08 11 13

SECTION 08 14 16 - FLUSH WOOD DOORS

PART 1 - GENERAL

1.1 RELATED DOCUMENTS

A. Drawings and general provisions of the Contract, including General and Supplementary Conditions and Division 01 Specification Sections, apply to this Section.

1.2 SUMMARY

A. Section Includes:

1. Solid-core doors with environmental particle board cores and wood-veneer faces.
2. Factory finishing flush wood doors.

B. Related Sections:

1. Division 08 Section "Hollow Metal Doors and Frames".
2. Division 08 Section “Door Hardware”.
3. Division 08 Section "Glazing" for glass view panels in flush wood doors.
4. Division 09 Section “Painting” for painting of metal frames of glazed fire doors.

1.3 SUBMITTALS

A. Product Data: For each type of door indicated. Include details of core and edge construction, louvers, and trim for openings. Include factory-finishing specifications.

B. Shop Drawings: Indicate location, size, and hand of each door; elevation of each kind of door; construction details not covered in Product Data; location and extent of hardware blocking; and other pertinent data.

1. Indicate dimensions and locations of mortises and holes for hardware.
2. Indicate dimensions and locations of cutouts.
3. Indicate requirements for veneer matching.
4. Indicate doors to be factory finished and finish requirements.
5. Indicate fire-protection ratings for fire-rated doors.

C. Samples for Initial Selection: For factory-finished doors.

D. Samples for Verification:

1. Factory finishes applied to actual door face materials, approximately 8 by 10 inches, for each material and finish. For each wood species and transparent finish, provide set of three samples showing typical range of color and grain to be expected in the finished work.
2. Frames for light openings, 6 inches long, for each material, type, and finish required.

E. Warranty: Sample of special warranty.

1.4 QUALITY ASSURANCE

A. Source Limitations: Obtain flush wood doors and wood paneling from single manufacturer.

B. Quality Standard: In addition to requirements specified, comply with WDMA I.S.1-A, "Architectural Wood Flush Doors."

1. Premium Grade.

1.5 DELIVERY, STORAGE, AND HANDLING

A. Comply with requirements of referenced standard and manufacturer's written instructions.

B. Package doors individually in plastic bags or cardboard cartons.

C. Mark each door on top and bottom rail with opening number used on Shop Drawings. Use removable or concealed markings.

1.6 PROJECT CONDITIONS

A. Environmental Limitations: Do not deliver or install doors until spaces are enclosed and weathertight, wet work in spaces is complete and dry, and HVAC system is operating and maintaining ambient temperature and humidity conditions at occupancy levels during the remainder of the construction period.

1.7 WARRANTY

A. Special Warranty: Manufacturer's standard form in which manufacturer agrees to repair or replace doors that fail in materials or workmanship within specified warranty period.

1. Failures include, but are not limited to, the following:

a. Warping (bow, cup, or twist) more than 1/4 inch in a 42-by-84-inch section.
b. Telegraphing of core construction in face veneers exceeding 0.01 inch in a 3-inch span.

2. Warranty shall also include installation and finishing that may be required due to repair or replacement of defective doors.
3. Warranty Period for Solid-Core Interior Doors: Life of installation.

PART 2 - PRODUCTS

2.1 MANUFACTURERS

A. Manufacturers: Subject to compliance with requirements, provide products by one of the following:

1. Algoma Hardwoods, Inc.
2. Eggers Industries.
3. Graham; an Assa Abloy Group company.
4. Marshfield Door Systems, Inc. (Basis of Design)
5. Prior approved equals.

2.2 DOOR CONSTRUCTION, GENERAL

A. Low-Emitting Materials: Provide doors made with adhesives and composite wood products that do not contain urea formaldehyde.

B. WDMA I.S.1-A Performance Grade: Heavy Duty.

C. WDMA I.S.1-A Performance Grade:

1. Heavy Duty unless otherwise indicated.

D. Environmental Particle Board Core Doors:

1. Provide SCS products for particle board cores of recycled materials with percentage indicated (20% minimum).

2. Provide 5” (minimum) stiles and top and bottom rails of laminated strand lumber (LSL) for anchorage of special hardware. Provide mid rail for doors indicated to receive exit device hardware.

3. Solid wood edge to cover LSL stiles and rails. ¼” thick of a species visually compatible with face.

E. Mineral-Core Doors:

1. Core: Noncombustible mineral product complying with requirements of referenced quality standard and testing and inspecting agency for fire-protection rating indicated.
2. Blocking: Provide composite blocking with improved screw-holding capability approved for use in doors of fire-protection ratings indicated as follows:

   a. 5-inch top-rail blocking.
   b. 5-inch bottom-rail blocking, in doors indicated to have protection plates.
   c. 5-inch midrail blocking, in doors indicated to have exit devices.

3. Edge Construction: At hinge stiles, provide laminated-edge construction with improved screw-holding capability and split resistance. Comply with specified requirements for exposed edges.

2.3 VENEERED-FACED DOORS FOR TRANSPARENT FINISH

A. Interior Solid-Core Doors:

1. Grade: Premium, with Grade A faces.
2. Species: Select White Maple.
3. Cut: Plain sliced (flat sliced).
4. Match between Veneer Leaves: Slip matching pleasing match without “Barber Pole” effect.
5. Assembly of Veneer Leaves on Door Faces: Running match.
6. Pair and Set Match: Provide for doors hung in same opening or separated only by mullions.
7. Room Match: Provide door faces of compatible color and grain within each separate room or area of building.
8. Exposed Vertical Edges: Same species as faces or compatible species.
9. Core: Environmental Particleboard.
10. Construction: Five or seven plies. Stiles and rails are bonded to core, then entire unit abrasive planed before veneering.
11. WDMA I.S.1-A Performance Grade: Heavy Duty.

2.4 LOUVERS AND LIGHT FRAMES

A. Wood Beads for Light Openings in Wood Doors: Provide manufacturer's standard wood beads as follows unless otherwise indicated.

1. Wood Species: Species compatible with door faces.
2. Profile: Flush rectangular beads.
3. At wood-core doors with 20-minute fire-protection ratings, provide wood beads and metal glazing clips approved for such use.

2.5 FABRICATION

A. Factory fit doors to suit frame-opening sizes indicated. Comply with clearance requirements of referenced quality standard for fitting unless otherwise indicated.

1. Comply with requirements in NFPA 80 for fire-rated doors.

B. Factory machine doors for hardware that is not surface applied. Locate hardware to comply with DHI-WDHS-3. Comply with final hardware schedules, door frame Shop Drawings, DHI A115-W series standards, and hardware templates.

1. Coordinate with hardware mortises in metal frames to verify dimensions and alignment before factory machining.

C. Openings: Cut and trim openings through doors in factory.

1. Light Openings: Trim openings with moldings of material and profile indicated.

2.6 FACTORY FINISHING

A. General: Comply with referenced quality standard for factory finishing. Complete fabrication, including fitting doors for openings and machining for hardware that is not surface applied, before finishing.

1. Finish faces, all four edges, edges of cutouts, and mortises. Stains and fillers may be omitted on top and bottom edges, edges of cutouts, and mortises.

B. Finish doors at factory.

C. Finish doors at factory that are indicated to receive transparent finish. Field finish doors indicated to receive opaque finish.

D. Finish doors at factory where indicated in schedules or on Drawings as factory finished.

E. Transparent Finish:

1. Grade: Premium.
2. Finish: WDMA TR-6 catalyzed polyurethane.
3. Staining: As selected by Architect from manufacturer's full range.
4. Effect: Semifilled finish, produced by applying an additional finish coat to partially fill the wood pores.
5. Sheen: Semigloss.

PART 3 - EXECUTION

3.1 EXAMINATION

A. Examine doors and installed door frames before hanging doors.

1. Verify that frames comply with indicated requirements for type, size, location, and swing characteristics and have been installed with level heads and plumb jambs.
2. Reject doors with defects.

B. Proceed with installation only after unsatisfactory conditions have been corrected.

3.2 INSTALLATION

A. Hardware: For installation, see Division 08 Section "Door Hardware."

Installation Instructions: Install doors to comply with manufacturer's written instructions and the referenced quality standard, and as indicated.

B. Factory-Fitted Doors: Align in frames for uniform clearance at each edge.

C. Factory-Finished Doors: Restore finish before installation if fitting or machining is required at Project site.

3.3 ADJUSTING

A. Operation: Rehang or replace doors that do not swing or operate freely.

B. Finished Doors: Replace doors that are damaged or that do not comply with requirements. Doors may be repaired or refinished if work complies with requirements and shows no evidence of repair or refinishing.

END OF SECTION 08 14 16

SECTION 08 31 13 - ACCESS DOORS AND FRAMES

PART 1 - GENERAL

1.1 RELATED DOCUMENTS: Drawings and general provisions of the Contract, including General and Supplementary Conditions and Division 1 Specification Sections, apply to this Section.

1.2 SUMMARY

A. This Section includes the following types of access doors:
1. Non-fire-rated access door for installation in gypsum board assemblies.

B. Related Sections: The following Sections contain requirements that relate to this Section:
1. Division 09 Section, "Gypsum Board".
2. Division 09 Section, "Painting".
3. Division 23 Section for concealed mechanical, plumbing, and fire protection equipment access.
4. Division 26 Section for concealed electrical equipment access.

1.3 SUBMITTALS

A. General: Submit each item in this Article according to the Conditions of Contract & Division 1 Specification Sections.

B. Product data for each type of access door assembly specified, including details of construction relative to materials, individual components, profiles, finishes, and fire-protection ratings (if required).

1. Include complete schedule, including types, general locations, sizes, wall and ceiling construction details, latching or locking provisions, and other data pertinent to installation.

1.4 QUALITY ASSURANCE

A. Single-Source Responsibility: Obtain each type of access doors from one source and by a single manufacturer.

B. Size Variations: Obtain Architect's acceptance of manufacturer's standard size units, which may vary slightly from sizes indicated.

1.5 COORDINATION: Verification: Determine specific locations and sizes for access doors needed to gain access to concealed equipment, and indicate on schedule specified under "Submittals" Article.

PART 2 - PRODUCTS

2.1 MANUFACTURERS

A. Manufacturers: Subject to compliance with requirements, provide products by the following:

1. Cesco Products.
2. J.L. Industries.
3. Larsen's Manufacturing Co.
4. Milcor, Inc.
5. Approved equals.

2.2 MATERIALS

A. Steel Sheet: ASTM A 366/A 366M commercial-quality, cold-rolled steel sheet with baked-on, rust-inhibitive primer. Provide at all gypsum board finished wall and ceiling locations.

2.3 ACCESS DOORS

A. Noninsulated, Doors for Walls and ceilings: Self-latching units consisting of frame, trim, door, and hardware, including automatic closer, interior latch release, and complying with the following requirements:

1. Frame: 0.0598-inch- (1.52-mm-) thick steel sheet.
2. Door: 0.0598-inch- (1.52-mm-) thick steel sheet.
3. Hinge: Continuous type.
4. Latches: Bolt type, operated by either a ring turn or flush key device (keyed alike). Provide ring turn type at non-public accessible doors.
5. Size: As noted on Drawings, or as required for service access.

2.4 FABRICATION

A. General: Manufacture each access door assembly as an integral unit ready for installation.

B. Steel Access Doors & Frames: Continuous welded construction. Grind welds smooth and flush with adjacent surfaces. Furnish attachment devices and fasteners of type required to secure access panels to types of supports indicated.

1. (Typical) Exposed Flange: Nominal 1 to 1-1/2 inches (25.4 to 38.1 mm) wide around perimeter of frame.

C. Locking Devices: Furnish number required to hold door in flush, smooth plane when closed.

1. For cylinder lock, furnish 2 keys per lock and key all locks alike.

PART 3 - EXECUTION

3.1 PREPARATION: Advise Installers of other work about specific requirements relating to access door installation, including sizes of openings to receive access door and frame, as well as locations of supports, inserts, and anchoring devices. Furnish inserts and anchoring devices for access doors that must be built into other construction. Coordinate delivery with other work to avoid delay.

3.2 INSTALLATION

A. Comply with manufacturer's instructions for installing access doors.

B. Coordinate locations of each access door with applicable code requirements for size and clearance if not otherwise indicated. Install insulated doors in exterior walls and roof plenum ceilings as required.

C. Install concealed-frame access doors flush with adjacent finish surfaces.

3.3 ADJUST AND CLEAN

A. Adjust hardware and panels after installation for proper operation.

B. Remove and replace panels or frames that are warped, bowed, or otherwise damaged.

END OF SECTION 08 31 13

SECTION 08 33 23 - OVERHEAD COILING DOORS

PART 1 - GENERAL

1.1 RELATED DOCUMENTS

A. Drawings and general provisions of the Contract, including General and Supplementary Conditions and Division 01 Specification Sections, apply to this Section.

1.2 SUMMARY

A. Section Includes:
   1. Insulated service door.

B. Related Requirements:

   1. Division 05 Section "Metal Fabrications" for miscellaneous steel supports.

   2. Division 08 Section “”Finish Hardware” for lock cylinders.

   3. Division 26 Section “Electrical” for motor power/connections.

1.3 ACTION SUBMITTALS

A. Product Data: For each type and size of overhead coiling door and accessory.

   1. Include construction details, material descriptions, dimensions of individual components, profiles for slats, and finishes.
   2. Include rated capacities, operating characteristics, electrical characteristics, and furnished accessories.

B. Shop Drawings: For each installation and for special components not dimensioned or detailed in manufacturer's product data.

   1. Include plans, elevations, sections, and mounting details.
   2. Include details of equipment assemblies, and indicate dimensions, required clearances, method of field assembly, components, and location and size of each field connection.
   3. For exterior components, include details of provisions for assembly expansion and contraction and for excluding and draining moisture to the exterior.
   4. Show locations of controls, locking devices**,** detectors and other accessories.
   5. Include diagrams for power, signal, and control wiring.

C. Samples for Initial Selection: Manufacturer's finish charts showing full range of colors and textures available for units with factory-applied finishes.

   1. Include similar Samples of accessories involving color selection.

1.4 INFORMATIONAL SUBMITTALS

A. Qualification Data: For Installer.

1.5 CLOSEOUT SUBMITTALS

A. Maintenance Data: For overhead coiling doors to include in maintenance manuals.

1.6 QUALITY ASSURANCE

A. Installer Qualifications: An entity that employs installers and supervisors who are trained and approved by manufacturer for both installation and maintenance of units required for this Project.

1. Maintenance Proximity: Not more than one hours' normal travel time from Installer's place of business to Project site.

PART 2 - PRODUCTS

2.1 MANUFACTURERS, GENERAL

A. Source Limitations: Obtain overhead coiling doors from single source from single manufacturer.

1. Obtain operators and controls from overhead coiling door manufacturer.

2.2 PERFORMANCE REQUIREMENTS

A. Structural Performance, Exterior Doors: Capable of withstanding the design wind loads.

1. Design Wind Load: 90 mph and Uniform pressure (velocity pressure) of not less than 20 lbf/sq. ft. (960 Pa), acting inward and outward.
2. Deflection Limits: Design overhead coiling doors to withstand design wind load without evidencing permanent deformation or disengagement of door components.

B. Seismic Performance: Overhead coiling doors shall withstand the effects of earthquake motions determined according to ASCE/SEI 7.

1. Component Importance Factor**:** 1.0**.**

2.3 DOOR ASSEMBLY

A. Insulated Service Door: Overhead coiling door formed with curtain of interlocking metal slats.

B. Operation Cycles: Door components and operators capable of operating for not less than 20,000. One operation cycle is complete when a door is opened from the closed position to the fully open position and returned to the closed position.

C. Air Infiltration: Maximum rate of 0.08 cfm/sq. ft. (0.406 L/s per sq. m) at 15 and 25 mph (24.1 and 40.2 km/h) when tested according to ASTM E 283.

D. STC Rating: 21.

E. Curtain R-Value: **7.7**.

F. Door Curtain Material: Galvanized steel.

G. Door Curtain Slats: Insulated Flat profile slats of 2-5/8-inch (67-mm) center-to-center height.
   1. Insulated-Slat Interior Facing: Metal to match exterior, color: White.
   2. Gasket Seal. Manufacturer's standard continuous gaskets between slats.

H. Bottom Bar: Two angles, each not less than 1-1/2 by 1-1/2 by 1/8 inch (38 by 38 by 3 mm) thick; fabricated from hot-dip galvanized steel and finished to match door.

I. Curtain Jamb Guides: Galvanized steel with exposed finish suitable for field painting

J. Hood: Match curtain material and finish.

   1. Shape: Round.
   2. Mounting: Face of wall.

K. Locking Devices: Equip door with locking device assembly.

   1. Locking Device Assembly: Single-jamb side locking bars, operable from inside and outside with cylinders.

L. Electric Door Operator:

   1. Usage Classification: Standard duty, up to 25 cycles per hour and up to 90 cycles per day.
   2. Operator Location: Top of hood.
   3. Safety: Listed according to UL 325 by a qualified testing agency for commercial or industrial use..
   4. Motor Exposure: Interior.
   5. Emergency Manual Operation: Chain type.
   6. Obstruction-Detection Device: Automatic Manufacturer’s bottom edge sensor type.

      a. Sensor Edge Bulb Color: Black.

   7. Control Station(s): Interior mounted.

M. Curtain Accessories: Equip door with weather seals.

N. Door Finish:
   1. Exterior- Baked Enamel or Powder-Coated Finish: Selected from RAL Color Chart Colors.

2. Interior Curtain-Slat Facing: Baked Enamel or Powder-Coated Finish: White.

2.4 MATERIALS, GENERAL

A. Electrical Components, Devices, and Accessories: Listed and labeled as defined in NFPA 70, by a qualified testing agency, and marked for intended location and application.

2.5 DOOR CURTAIN MATERIALS AND CONSTRUCTION

A. Door Curtains: Fabricate overhead coiling-door curtain of interlocking metal slats, designed to withstand wind loading indicated, in a continuous length for width of door without splices. Unless otherwise indicated, provide slats of thickness and mechanical properties recommended by door manufacturer for performance, size, and type of door indicated, and as follows:

1. Steel Door Curtain Slats: Zinc-coated (galvanized), cold-rolled structural steel sheet; complying with ASTM A 653/A 653M, with G90 (Z275) zinc coating; nominal sheet thickness (coated) of 0.028 inch (0.71 mm); and as required.

B. Curtain Jamb Guides: Manufacturer's standard angles or channels and angles of same material and finish as curtain slats unless otherwise indicated, with sufficient depth and strength to retain curtain, to allow curtain to operate smoothly, and to withstand loading. Slot bolt holes for guide adjustment. Provide removable stops on guides to prevent overtravel of curtain**,** and a continuous bar for holding windlocks.

2.6 HOODS

A. General: Form sheet metal hood to entirely enclose coiled curtain and operating mechanism at opening head. Contour to fit end brackets to which hood is attached. Roll and reinforce top and bottom edges for stiffness. Form closed ends for surface-mounted hoods and fascia for any portion of between-jamb mounting that projects beyond wall face. Equip hood with intermediate support brackets as required to prevent sagging.

1. Galvanized Steel: Nominal 0.028-inch- (0.71-mm-) thick, hot-dip galvanized steel sheet with G90 (Z275) zinc coating, complying with ASTM A 653/A 653M.

2.7 LOCKING DEVICES

A. Locking Device Assembly: Fabricate with cylinder lock, spring-loaded dead bolt, operating handle, cam plate, and adjustable locking bars to engage through slots in tracks.

1. Lock Cylinders: Cylinders specified in Section 08 71 00 "Door Hardware" and keyed to building keying system.

B. Safety Interlock Switch: Equip power-operated doors with safety interlock switch to disengage power supply when door is locked.

2.8 CURTAIN ACCESSORIES

A. Weather seals for Exterior Doors: Equip each exterior door with weather-stripping gaskets fitted to entire exterior perimeter of door for a weather-resistant installation unless otherwise indicated.

1. At door head, use 1/8-inch- (3-mm-) thick, replaceable, continuous-sheet baffle secured to inside of hood or field- installed on the header.
2. At door jambs, use replaceable, adjustable, continuous, [flexible, 1/8-inch- (3-mm-) thick seals of flexible vinyl, rubber, or neoprene.

2.9 COUNTERBALANCING MECHANISM

A. General: Counterbalance doors by means of manufacturer's standard mechanism with an adjustable-tension, steel helical torsion spring mounted around a steel shaft and contained in a spring barrel connected to top of curtain with barrel rings. Use grease-sealed bearings or self-lubricating graphite bearings for rotating members.

B. Counterbalance Barrel: Fabricate spring barrel of manufacturer's standard hot-formed, structural-quality, seamless or welded carbon-steel pipe, of sufficient diameter and wall thickness to support rolled-up curtain without distortion of slats and to limit barrel deflection to not more than 0.03 in./ft. (2.5 mm/m) of span under full load.

C. Counterbalance Spring: One or more oil-tempered, heat-treated steel helical torsion springs. Size springs to counterbalance weight of curtain, with uniform adjustment accessible from outside barrel. Secure ends of springs to barrel and shaft with cast-steel barrel plugs.

D. Torsion Rod for Counterbalance Shaft: Fabricate of manufacturer's standard cold-rolled steel, sized to hold fixed spring ends and carry torsional load.

E. Brackets: Manufacturer's standard mounting brackets of either cast iron or cold-rolled steel plate.

2.10 ELECTRIC DOOR OPERATORS

A. General: Electric door operator assembly of size and capacity recommended and provided by door manufacturer for door and operation-cycles requirement specified, with electric motor and factory-prewired motor controls, starter, gear-reduction unit, solenoid-operated brake, clutch, control stations, control devices, integral gearing for locking door, and accessories required for proper operation.
1. Comply with NFPA 70.
2. Control equipment complying with NEMA ICS 1, NEMA ICS 2, and NEMA ICS 6, with NFPA 70 Class 2 control circuit, maximum 24-V ac or dc.

B. Usage Classification: Electric operator and components capable of operating for not less than number of cycles per hour indicated for each door.

C. Door Operator Location(s): Operator location indicated for each door.

1. Top-of-Hood Mounted: Operator is mounted to the right or left door head plate with the operator on top of the door-hood assembly and connected to the door drive shaft with drive chain and sprockets. Headroom is required for this type of mounting.

D. Motors: Reversible-type motor with controller (disconnect switch) for motor exposure indicated.

1. Electrical Characteristics:

a. Phase: Single phase.
b. Volts: 115 V.
c. Hertz: 60.

2. Motor Size: Minimum size as indicated. If not indicated, large enough to start, accelerate, and operate door in either direction from any position, at a speed not less than 8 in./sec. (203 mm/s) and not more than 12 in./sec. (305 mm/s), without exceeding nameplate ratings or service factor.
3. Operating Controls, Controllers, Disconnect Switches, Wiring Devices, and Wiring: Manufacturer's standard unless otherwise indicated.
4. Coordinate wiring requirements and electrical characteristics of motors and other electrical devices with building electrical system and each location where installed.

E. Limit Switches: Equip each motorized door with adjustable switches interlocked with motor controls and set to automatically stop door at fully opened and fully closed positions.

F. Obstruction Detection Devices: External entrapment protection consisting of indicated automatic safety sensor capable of protecting full width of door opening. For non-fire-rated doors, activation of device immediately stops and reverses downward door travel.

1. Electric Sensor Edge: Automatic safety sensor edge, located within astragal or weather stripping mounted to bottom bar. Contact with sensor activates device. Connect to control circuit using manufacturer's standard take-up reel or self-coiling cable.

a. Self-Monitoring Type: Four-wire configured device designed to interface with door operator control circuit to detect damage to or disconnection of sensor edge.

G. Control Station: Three-button control station in fixed location with momentary-contact push-button controls labeled "Open" and "Stop" and sustained- or constant-pressure push-button control labeled "Close."

1. Interior-Mounted Units: Full-guarded, surface-mounted, heavy-duty type, with general-purpose NEMA ICS 6, Type 1 enclosure.

H. Emergency Manual Operation: Equip each electrically powered door with capability for emergency manual operation. Design manual mechanism so required force for door operation does not exceed 25 lbf (111 N).

I. Motor Removal: Design operator so motor may be removed without disturbing limit-switch adjustment and without affecting emergency manual operation.

2.11 GENERAL FINISH REQUIREMENTS

A. Comply with NAAMM/NOMMA's "Metal Finishes Manual for Architectural and Metal Products (AMP 500-06)" for recommendations for applying and designating finishes.

B. Appearance of Finished Work: Noticeable variations in same piece are not acceptable. Variations in appearance of adjoining components are acceptable if they are within the range of approved Samples and are assembled or installed to minimize contrast.

2.12 STEEL AND GALVANIZED-STEEL FINISHES

A. Baked-Enamel or Powder-Coat Finish: Manufacturer's standard baked-on finish consisting of prime coat and thermosetting topcoat. Comply with coating manufacturer's written instructions for cleaning, pretreatment, application, and minimum dry film thickness.

PART 3 - EXECUTION

3.1 EXAMINATION

A. Examine substrates areas and conditions, with Installer present, for compliance with requirements for substrate construction and other conditions affecting performance of the Work.

B. Examine locations of electrical connections.

C. Proceed with installation only after unsatisfactory conditions have been corrected.

3.2 INSTALLATION

A. Install overhead coiling doors and operating equipment complete with necessary hardware, anchors, inserts, hangers, and equipment supports; according to manufacturer's written instructions and as specified.

B. Install overhead coiling doors, hoods, controls, and operators at the mounting locations indicated for each door.

3.3 STARTUP SERVICE

A. Engage a factory-authorized service representative to perform startup service.

1. Perform installation and startup checks according to manufacturer's written instructions.
2. Test and adjust controls and safety devices. Replace damaged and malfunctioning controls and equipment.
3. Test door closing when activated by detector or alarm-connected fire-release system. Reset door-closing mechanism after successful test.

3.4 ADJUSTING

A. Adjust hardware and moving parts to function smoothly so that doors operate easily, free of warp, twist, or distortion.

1. Adjust exterior doors and components to be weather-resistant.

B. Lubricate bearings and sliding parts as recommended by manufacturer.

C. Adjust seals to provide tight fit around entire perimeter.

3.5 DEMONSTRATION

A. Engage a factory-authorized service representative to train Owner's maintenance personnel to adjust, operate, and maintain overhead coiling doors.

END OF SECTION 08 33 23

SECTION 08 41 13 - ALUMINUM FRAMED ENTRANCES AND STOREFRONTS

PART 1 - GENERAL

1.1 RELATED DOCUMENTS

A. Drawings and general provisions of the Contract, including General and Supplementary Conditions and Division 01 Specification Sections, apply to this Section.

1.2 SUMMARY

A. This Section includes the following:
   1. Exterior storefront and Window Systems.
   2. Exterior Sun Shade Louvers.
   3. Interior Light Shelf

B. Related sections include the following:
   1. Division 08 Section "Door Hardware".
   2. Division 08 Section "Glazing".
   3. Division 26 Sections for junction boxes in aluminum frames at electrical hardware locations and provisions for raceways in aluminum entrance door.

1.3 SYSTEM DESCRIPTION

A. General: Provide aluminum entrance and storefront systems (including windows) capable of withstanding loads and thermal and structural movement requirements indicated without failure, based on testing manufacturer's standard units in assemblies similar to those indicated for this Project. Failure includes the following:

   1. Air infiltration and water penetration exceeding specified limits.
   2. Framing members transferring stresses, including those caused by wind, thermal and structural movement, to glazing units.

B. Glazing: Physically and thermally isolate glazing from framing members.
   1. Provide window frames with stops and accessories for outside glazing.

C. Wind Loads: Provide entrance and storefront systems, including anchorage, capable of withstanding wind-load design pressures of 30 lb per square foot minimum.

   1. Deflection of framing members in a direction normal to wall plane is limited to 1/175 of clear span or 3/4 inch (19 mm), whichever is smaller, unless otherwise indicated.

   2. Static-Pressure Test Performance: Provide entrance and storefront systems that do not evidence material failures, structural distress, failure of operating components to function normally, or permanent deformation of main framing members exceeding 0.2 percent of clear span when tested according to ASTM E 330.
      a. Test Pressure: 150 percent of inward and outward wind-load design pressures.
      b. Duration: As required by design wind velocity; fastest 1 mile of wind for relevant exposure category.

D. Seismic Loads: Provide entrance and storefront systems, including anchorage, capable of withstanding the effects of earthquake motions calculated according to requirements of authorities having jurisdiction or ASCE 7, "Minimum Design Loads for Buildings and Other Structures," Section 9, "Earthquake Loads," whichever are more stringent.

E. Dead Loads: Provide entrance- and storefront-system members that do not deflect an amount which will reduce glazing bite below 75% of design dimension when carrying full dead load.

1. Provide a minimum 1/16-inch clearance between members & operable windows and doors.

F. Air Infiltration: Provide entrance and storefront systems with permanent resistance to air leakage through fixed glazing and frame areas of not more than 0.06 cfm/sq. ft. of fixed wall area when tested according to ASTM E 283 at a static-air-pressure difference of 6.24 lbf/sq. ft.

G. Water Penetration: Provide entrance and storefront systems that do not evidence water leakage through fixed glazing and frame areas when tested according to ASTM E 331 at minimum differential pressure of 20 percent of inward-acting wind-load design pressure. Water leakage is defined as follows: Water leakage: None when measured in accordance with ASTM E 331 at test measure of 8 PSF.

1. Uncontrolled water infiltrating systems or appearing on systems' normally exposed interior surfaces from sources other than condensation. Water controlled by flashing and gutters that is drained back to the exterior and cannot damage adjacent materials or finishes is not water leakage.

H. Thermal Movements: Provide entrance and storefront systems, including anchorage, that accommodate thermal movements of systems and supporting elements resulting from the following maximum change (range) in ambient and surface temperatures without buckling, damaging stresses on glazing, failure of joint sealants, damaging loads on fasteners, failure of doors or other operating units to function properly, and other detrimental effects.

1. Temperature Change (Range): 120 deg F, ambient; 180 deg F, material surfaces.

I. Structural-Support Movement: Provide entrance and storefront systems that accommodate structural movements including, but not limited to, sway and deflection.

J. Condensation Resistance: Provide storefront systems with condensation resistance factor (CRF) of not less than 60 when tested according to AAMA 1503.1.

K. Average Thermal Conductance: Provide storefront systems with average U-values of not more than 0.58 Btu/sq. ft. x h x deg F when tested according to AAMA 1503.1.

L. Dimensional Tolerances: Provide entrance and storefront systems that accommodate dimensional tolerances of building frame and other adjacent construction.

1.4 SUBMITTALS

A. Product Data: For each product specified. Include details of all adjacent construction materials, dimensions of individual components, profiles, and finishes.

B. Shop Drawings: For entrance and storefront systems (including windows). Show details of fabrication and installation, including plans, elevations, sections, details of components, provisions for expansion and contraction, and attachments to other work.

1. For entrance systems, include hardware schedule and indicate operating hardware types, quantities, and locations including Hardware being provided by Division 08 Section, Finish Hardware.

C. Samples for Initial Selection: Match Architect's Sample: Custom Kynar color to be selected by

the Architect.

D. Installer Certificates: Signed by manufacturer certifying that installers comply with specified requirements and is an authorized distributor/installer for manufacturer of Aluminum Systems used on this project.

E. Product Test Reports: Based on evaluation of tests performed by manufacturer and witnessed by a qualified independent testing agency, indicate compliance of entrance and storefront systems with requirements based on comprehensive testing of current systems.

1.5 QUALITY ASSURANCE

A. Installer Qualifications: Engage an experienced installer to assume engineering responsibility and perform work of this Section who has specialized in installing entrance and storefront systems similar to those required for this Project and who is acceptable to manufacturer.

1. Engineering Responsibility: Prepare data for entrance and storefront systems, including Shop Drawings, based on testing and engineering analysis of manufacturer's standard units in assemblies similar to those indicated for this Project.

B. Source Limitations: Obtain each type of entrance and storefront system through one source from a single manufacturer.

C. Product Options: Drawings indicate size, profiles, and dimensional requirements of entrance and storefront systems and are based on the specific systems indicated. Other manufacturers' systems with equal performance characteristics may be considered. Refer to Division 01 Section, "Substitutions and Product Options."

1. Entrance: Monumental Wide Stile System as manufactured by Tubelite.
2. Typical Storefront: 14000 Series as manufactured by Tubelite.
3. Do not modify intended aesthetic effect, as judged solely by Architect, except with Architect's approval and only to the extent needed to comply with performance requirements. Where modifications are proposed, submit comprehensive explanatory data to Architect for review.

B. Welding Standards: Comply with applicable provisions of AWS D1.2, "Structural Welding Code--Aluminum."

1.6 PROJECT CONDITIONS

A. Field Measurements: Verify dimensions by field measurements before fabrication and indicate measurements on Shop Drawings. Coordinate fabrication schedule with construction progress to avoid delaying the Work.

1.7 WARRANTY

A. General Warranty: The special warranty specified in this Article shall not deprive the Owner of other rights the Owner may have under other provisions of the Contract Documents and shall be in addition to, and run concurrent with, other warranties made by the Contractor under requirements of the Contract Documents.

B. Special Warranty: Submit a written warranty executed by the manufacturer agreeing to repair or replace components of entrance and storefront systems that fail in materials or workmanship within the specified warranty period. Failures include, but are not limited to, the following:

1. Structural failures including, but not limited to, excessive deflection.

4. Adhesive sealant failures.
3. Cohesive sealant failures.
4. Failure of system to meet performance requirements.
5. Deterioration of metals, metal finishes, and other materials beyond normal weathering.
6. Failure of operating components to function normally.
7. Water leakage through fixed glazing and frame areas.

C. Warranty Period: 2 years from date of Substantial Completion.

PART 2 - PRODUCTS

2.1 MANUFACTURERS

A. Manufacturers: Subject to compliance with requirements, provide products by the following or approved equal.

1. Tubelite Inc. 2” x 4-1/2" 14000 Series, center glazed, thermally broken.
2. Prior Approved Equals

2.2 MATERIALS

A. Aluminum: Alloy and temper recommended by manufacturer for type of use and finish indicated, complying with the requirements of standards indicated below.

1. Sheet and Plate: ASTM B 209 (ASTM B 209M)
3. Extruded Bars, Rods, Shapes, and Tubes: ASTM B 221 (ASTM B 221M).
4. Extruded Structural Pipe and Tubes: ASTM B 429.
5. Bars, Rods, and Wire: ASTM B 211 (ASTM B 211M).
6. Welding Rods and Bare Electrodes: AWS A5.10.

B. Steel Reinforcement: Complying with ASTM A 36 (ASTM A 36M) for structural shapes, plates, and bars; ASTM A 611 for cold-rolled sheet and strip; or ASTM A 570 (ASTM A 570M) for hot-rolled sheet and strip.

C. Glazing as specified in Division 08 Section "Glazing."

D. Glazing Gaskets: Manufacturer's standard pressure-glazing system of black, resilient glazing gaskets, setting blocks, and shims or spacers, fabricated from an elastomer of type and in hardness recommended by system and gasket manufacturer to comply with system performance requirements. Provide gasket assemblies that have corners sealed with sealant recommended by gasket manufacturer.

E. Spacers, Setting Blocks, Gaskets, and Bond Breakers: Manufacturer's standard permanent, nonmigrating types in hardness recommended by manufacturer, compatible with sealants, and suitable for system performance requirements.

F. Secondary Sealant: For use as weatherseal, compatible with structural silicone sealant and other system components with which it comes in contact, and that accommodates a 50 percent increase or decrease in joint width at the time of application when measured according to ASTM C 719.

1. Color: Clear anodized.
2. Use neutral-cure silicone sealant with insulating-glass units.

G. Framing system gaskets, sealants, and joint fillers as recommended by manufacturer for joint type.

H. Sealants and joint fillers for joints at perimeter of entrance and storefront systems as specified in Division 07 Section "Joint Sealants."

I. Bituminous Paint: Cold-applied asphalt-mastic paint complying with SSPC-Paint 12 requirements, except containing no asbestos, formulated for 30-mil thickness per coat.

2.3 COMPONENTS

A. Entrance Doors: Provide manufacturer's Wide Stile entrance doors as manufactured by Tubelite. .

1. Performance Requirements Structural: Resistance to corner racking shall be tested by the dual moment load test as follows:
   a. Test section shall consist of a standard top door corner assembly. Side rail section shall be 24" long and top rail section shall be 12" long.
   b. Anchor "top rail" positively to test bench so that corner protrudes 3" beyond bench edge.
   c. Anchor a lever arm positively to "side rail" at a point 19" from inside edge of "top rail". Attach weight support pad at a point 19" from inner edge of "side rail".
   d. Test section shall withstand a load of 300 pounds on lever arm before reaching the point of failure, which shall be considered a rotation of the lever arm in excess of 45 degrees. Air infiltration shall be tested in accordance with ASTM E283 at a pressure differential of 1.567 P.S.F.
   e. A single 3'-0" X 7'-0" entrance door and frame shall not exceed .50 CFM per linear foot of perimeter crack.
2. Stile Design: Wide stile; 5 inch minimum width and Mfg. standard thickness.

B. Glazing Stops and Gaskets: Provide manufacturer's standard snap-on extruded-aluminum glazing stops and preformed gaskets.

C. Sill Finishing: Manufactures standard sill flashing unit to conduct water to the exterior.

D. Brackets and Reinforcements: Provide manufacturer's heavy duty brackets and reinforcements that are compatible with adjacent materials. Provide nonstaining, nonferrous shims for aligning system components.

E. Fasteners and Accessories: Manufacturer's heavy duty corrosion-resistant, nonstaining, nonbleeding fasteners and accessories compatible with adjacent materials.

1. Reinforce members as required to retain fastener threads.
2. Do not use exposed fasteners, except for hardware application (unless approved by the Architect). For hardware application, use countersunk Phillips flat-head machine screws finished to match framing members or hardware being fastened, unless otherwise indicated.

F. Concealed Flashing: Dead-soft, 0.018-inch- thick stainless steel, complying with ASTM A 666, of type selected by manufacturer for compatibility with system.

G. Weather Stripping: Manufacturer's standard replaceable weather stripping as follows:
1. Compression Weather Stripping: Molded neoprene complying with ASTM D 2000 requirements or molded PVC complying with ASTM D 2287 requirements.

H. Exterior Sun Shade: Tubelite Maxblock Z Blade series (or approved equal) 25 inch outrigger with four blades. Finish to match storefront finish.

I. Interior Light Shelf: Tubelite aLuminate-TM (or approved equal) with 24 inch in-riggers and bright white painted reflectors. In-rigger finish to match storefront finish.

2.4 HARDWARE

A. General: Provide Manufacturer's heavy-duty hardware units indicated:

B. Weather Stripping/Seals: Manufacturer's standard kerf set weather stripping/seals for application to exterior door jambs & head.

C. Provide coordination and preparation for additional hardware units as indicated in Division 08 Section, "Door Hardware".

2.5 FABRICATION

A. General: Fabricate components that, when assembled, will have accurately fitted joints with ends coped or mitered to produce hairline joints free of burrs and distortion. After fabrication, clearly mark components to identify their locations in Project according to Shop Drawings.

1. Fabricate components for shear-block frame construction.

B. Forming: Form shapes with sharp profiles, straight and free of defects or deformations, before finishing.

C. Prepare components to receive concealed fasteners and anchor and connection devices.

D. Fabricate components to drain water passing joints and condensation and moisture occurring or migrating within the system to the exterior.

E. Welding: Weld components to comply with referenced AWS standard. Weld before finishing components to greatest extent possible. Weld in concealed locations to greatest extent possible to minimize distortion or discoloration of finish. Remove weld spatter and welding oxides from exposed surfaces by descaling or grinding.

F. Glazing Channels: Provide minimum clearances for thickness and type of glass indicated according to FGMA's “Glazing Manual.”

G. Metal Protection: Where aluminum will contact dissimilar metals, protect against galvanic action by painting contact surfaces with primer or by applying sealant or tape recommended by manufacturer for this purpose. Where aluminum will contact concrete or masonry, protect against corrosion by painting contact surfaces with bituminous paint.

H. Storefront: Fabricate framing in profiles indicated for flush glazing (without projecting stops). Provide subframes and reinforcing of types indicated or, if not indicated, as required for a complete system. Factory assemble components to greatest extent possible. Disassemble components only as necessary for shipment and installation.

I. Entrances: Fabricate door framing in profiles indicated. Reinforce as required to support imposed loads. Factory assemble door and frame units and factory install hardware to greatest extent possible. Reinforce door and frame units as required for installing hardware indicated. Cut, drill, and tap for factory-installed hardware before finishing components.

1. Exterior Doors: Provide compression weather stripping at fixed stops. At other locations, provide sliding weather stripping retained in adjustable strip mortised into door edge.

2.6 ALUMINUM FINISHES

A. General: Comply with NAAMM's "Metal Finishes Manual for Architectural and Metal Products" for recommendations relative to applying and designating finishes.

B. Appearance of Finished Work: Variations in appearance of abutting or adjacent pieces are acceptable if they are within one-half of the range of approved Samples. Noticeable variations in the same piece are not acceptable. Variations in appearance of other components are acceptable if they are within the range of approved Samples & are assembled or installed to minimize contrast.

C. Clear Anodized Finish

2.7 STEEL PRIMING

A. General: Comply with NAAMM's "Metal Finishes Manual for Architectural and Metal Products" for recommendations relative to applying primer.

B. Surface Preparation: Perform manufacturer's standard cleaning operations to remove dirt, oil, grease, or other contaminants that could impair paint bond. Remove mill scale and rust, if present, from uncoated steel.

C. Priming: Apply manufacturer's standard corrosion-resistant primer immediately after surface preparation and pretreatment.

PART 3 - EXECUTION

3.1 EXAMINATION: Examine areas, with Installer present, for compliance with requirements for installation tolerances and other conditions affecting performance of entrance and storefront systems. Do not proceed with installation until unsatisfactory conditions have been corrected.

3.2 INSTALLATION

A. General: Comply with manufacturer's written instructions for protecting, handling, and installing entrance and storefront systems. Do not install damaged components. Fit frame joints to produce hairline joints free of burrs & distortion. Rigidly secure nonmovement joints. Seal joints watertight.

B. Metal Protection: Where aluminum will contact dissimilar metals, protect against galvanic action by painting contact surfaces with primer or by applying sealant or tape recommended by manufacturer for this purpose. Where aluminum will contact concrete or masonry, protect against corrosion by painting contact surfaces with bituminous paint.

C. Install components to drain water passing joints and condensation and moisture occurring or migrating within the system to the exterior.

D. Set continuous sill members and flashing in a full sealant bed to provide weather tight construction, unless otherwise indicated. Comply with requirements of Division 07 Section "Joint Sealants."

E. Install framing components plumb and true in alignment with established lines and grades without warp or rack of framing members.

F. Install entrances plumb and true in alignment with established lines and grades without warp or rack. Lubricate operating hardware and other moving parts according to hardware

manufacturers' written instructions.

1. Install surface-mounted hardware according to manufacturer's written instructions using concealed fasteners to greatest extent possible.

G. Install glazing to comply with requirements of Division 08 Section "Glazing," unless otherwise indicated.

1. Prepare surfaces that will contact structural sealant according to sealant manufacturer's written instructions to ensure compatibility and adhesion. Preparation includes, but is not limited to, cleaning and priming surfaces.
2. Install structural silicone sealant according to sealant manufacturer's written instructions.
3. Mechanically fasten glazing in place until structural sealant is cured.
4. Remove excess sealant from component surfaces before sealant has cured.

H. Install secondary-sealant weather seal according to sealant manufacturer's written instructions to provide weatherproof joints. Install joint fillers behind sealant as recommended by sealant manufacturer.

I. Install perimeter sealant to comply with requirements of Division 07 Section "Joint Sealants," unless otherwise indicated.

J. Erection Tolerances: Install entrance and storefront systems to comply with the following maximum tolerances:

1. Variation from Plane: Limit variation from plane or location shown to 1/8 inch in 12 feet; 1/4 inch over total length.
2. Alignment: Where surfaces abut in line, limit offset from true alignment to 1/16 inch. Where surfaces meet at corners, limit offset from true alignment to 1/32 inch.
3. Diagonal Measurements: Limit difference between diagonal measurements to 1/8 inch.

3.4 ADJUSTING AND CLEANING

A. Adjust doors and hardware to provide tight fit at contact points and weather stripping, smooth operation, and weather tight closure.

B. Remove excess sealant and glazing compounds, and dirt from surfaces.

3.5 PROTECTION

A. Provide final protection and maintain conditions, in a manner acceptable to manufacturer and Installer that ensure entrance and storefront systems are without damage or deterioration at the time of Substantial Completion.

END OF SECTION 08 41 13

SECTION 08 62 00 – UNIT SKYLIGHTS

PART 1 - GENERAL

1.01 SUMMARY

A. Section Includes:

1. Unit skylights.
2. Skylight Fall Protection Devices

2.02 ACTION SUBMITTALS

A. Product Data: For each type of unit skylight.

B. Shop Drawings: For unit skylight work. Include plans, elevations, sections, details, and connections to supporting structure and other adjoining work.

C. Samples: For each type of exposed finish required and each type of glazing.

2.03 INFORMATIONAL SUBMITTALS

A. Qualification data.

B. Product test reports.

2.04 CLOSEOUT SUBMITTALS

A. Maintenance data.

2.05 WARRANTY

A. Special Warranty: Manufacturer agrees to repair or replace components of unit skylights that fail in materials or workmanship within specified warranty period.

1. Warranty Period: Five years from date of Substantial Completion.

PART 2 - PRODUCTS

2.01 UNIT SKYLIGHTS

A. Unit Shape and Size: Rectangular, 58-by-58-inch outside curb (nominal).

B. Manufacturers:

1. Wasco –Eco-Sky3 – Basis of Design
2. Plasteco Inc.
3. Naturalite Inc. Old Castle
4. Approved equals

C. Acrylic Glazing: ASTM D 4802, thermoformable, monolithic sheet, category as standard with manufacturer, Finish 1 (smooth or polished), Type UVF (formulated with UV absorber).

1. Double (or Triple as required by thermal performance-Glazing Profile: Dome, 25 percent rise.

   a. Outer Glazing Color: Colorless, transparent.
   b. Inner Glazing Color: White, translucent.
   c. Inner Glazing Color (Triple Dome as required by thermal performance) Colorless, transparent.
   d. Cavity Filler -option (As required by thermal performance): Colorless, transparent.

2. Self-Ignition Temperature: 650 deg F or more for plastic sheets in thickness indicated when tested according to ASTM D 1929.

3. Smoke-Production Characteristics: Smoke-developed index of 450 or less when tested according to ASTM E 84, and smoke density of 75 or less when tested according to ASTM D 2843

4. Burning Characteristics: Tested according to ASTM D 635. Class CC2, burning rate of 2-1/2 inches per minute or less for nominal thickness of 0.060 inch or thickness indicated for use.

5. Thermal Performance: Compliance with IECC Climate Zone 5 – with New Mexico Amendments.

   a. Zone 5 U-factor: 0.50 or less
   b. Zone 5 Solar Heat Gain Coefficient (SHGC): 0.40 maximum

D. Glazing Gaskets: Manufacturer's standard.

E. Curb: Site fabricated wood curbs.

F. Condensation Control: Fabricate unit skylights with integral internal gutters and nonclogging weeps to collect and drain condensation to the exterior.

G. Thermal Break: Fabricate unit skylights with thermal barrier separating exterior and interior metal framing.

H. Fasteners: Same metal as metal being fastened, nonmagnetic stainless steel, or other noncorrosive metal as recommended by manufacturer. Finish exposed fasteners to match material being fastened. Provide non-removable fastener heads.

2.02 SKYLIGHT FALL PROTECTION DEVICES

A. Provide OSHA compliant Unit Skylight Protection Devices at all Unit Skylights
B. Manufacturer:
   1. Plasteco Model 100
   2. Wasco Safety Screen FP/BVFP
   3. Approved equals

2.03 ALUMINUM FINISHES

A. Clear Anodic Finish: AAMA 611, AA-M12C22A31, Class II, 0.010 mm or thicker.

PART 3 - EXECUTION

3.01 INSTALLATION

A. Coordinate installation of unit skylight with installation of substrates, vapor retarders, roof insulation, roofing membrane, and flashing as required to ensure that each element of the Work performs properly and that combined elements are waterproof and weathertight.

B. Comply with recommendations in AAMA 1607 and with manufacturer's written instructions for installing unit skylights.

3.02 FIELD QUALITY CONTROL

A. After completion of installation and nominal curing of sealant and glazing compounds but before installation of interior finishes, test for water leaks according to AAMA 501.2.

B. Perform test for total area of each unit skylight.

C. Work will be considered defective if it does not pass tests and inspections.

D. Additional testing and inspections, at Contractor's expense, will be performed to determine compliance of replaced or additional work with specified requirements.

3.03 CLEANING

A. Clean exposed unit skylight surfaces according to manufacturer's written instructions. Touch up damaged metal coatings and finishes.

END OF SECTION

SECTION 087100 – DOOR HARDWARE

PART 1 - GENERAL

1.1 RELATED DOCUMENTS

A. Drawings and general provisions of the Contract, including General and Supplementary Conditions and Division 01 Specification Sections, apply to this Section.

1.2 SUMMARY

A. Section includes:

1. Mechanical and electrified door hardware for:

a. Swinging doors.

B. Exclusions: Unless specifically listed in hardware sets, hardware is not specified in this section for:

1. Windows
2. Cabinets (casework), including locks in cabinets
3. Signage
4. Toilet accessories
5. Overhead doors

C. Related Sections:

1. Division 01 Section “Alternates” for alternates affecting this section.
2. Division 07 Section “Joint Sealants” for sealant requirements applicable to threshold installation specified in this section.
3. Division 09 sections for touchup finishing or refinishing of existing openings modified by this section.

1.3 REFERENCES

A. UL - Underwriters Laboratories

1. UL 10B - Fire Test of Door Assemblies
2. UL 10C - Positive Pressure Test of Fire Door Assemblies
3. UL 1784 - Air Leakage Tests of Door Assemblies
4. UL 305 - Panic Hardware

B. DHI - Door and Hardware Institute

1. Sequence and Format for the Hardware Schedule

2. Recommended Locations for Builders Hardware
3. Key Systems and Nomenclature

C. ANSI - American National Standards Institute

1. ANSI/BHMA A156.1 - A156.29, and ANSI/BHMA A156.31 - Standards for Hardware and Specialties

1.4 SUBMITTALS

A. General:

1. Submit in accordance with Conditions of Contract and Division 01 requirements.
2. Highlight, encircle, or otherwise specifically identify on submittals deviations from Contract Documents, issues of incompatibility or other issues which may detrimentally affect the Work.
3. Prior to forwarding submittal, comply with procedures for verifying existing door and frame compatibility for new hardware, as specified in PART 3, "EXAMINATION" article, herein.

B. Action Submittals:

1. Product Data: Product data including manufacturers' technical product data for each item of door hardware, installation instructions, maintenance of operating parts and finish, and other information necessary to show compliance with requirements.
2. Door Hardware Schedule: Submit schedule with hardware sets in vertical format as illustrated by Sequence of Format for the Hardware Schedule as published by the Door and Hardware Institute. Indicate complete designations of each item required for each door or opening, include:

   a. Door Index; include door number, heading number, and Architects hardware set number.
   b. Type, style, function, size, and finish of each hardware item.
   c. Name and manufacturer of each item.
   d. Fastenings and other pertinent information.
   e. Location of each hardware set cross-referenced to indications on Drawings.
   f. Explanation of all abbreviations, symbols, and codes contained in schedule.
   g. Mounting locations for hardware.
   h. Door and frame sizes and materials.
   i. Name and phone number for local manufacturer's representative for each product.
   j. Operational Description of openings with any electrified hardware (locks, exits, electromagnetic locks, electric strikes, automatic operators, door position switches, magnetic holders or closer/holder units, and access control components). Operational description should include how door will operate on egress, ingress, and fire and smoke alarm connection.
      1) Submittal Sequence: Submit door hardware schedule concurrent with submissions of Product Data, Samples, and Shop Drawings. Coordinate submission of door hardware schedule with scheduling requirements of other work to facilitate fabrication of other work that is critical in Project construction schedule.

3. Key Schedule:

    a. After Keying Conference, provide keying schedule listing levels of keying as well as explanation of key system's function, key symbols used and door numbers controlled.
    b. Use ANSI/BHMA A156.28 “Recommended Practices for Keying Systems” as guideline for nomenclature, definitions, and approach for selecting optimal keying system.
    c. Provide 3 copies of keying schedule for review prepared and detailed in accordance with referenced DHI publication. Include schematic keying diagram and index each key to unique door designations.
    d. Index keying schedule by door number, keyset, hardware heading number, cross keying instructions, and special key stamping instructions.
    e. Provide one complete bitting list of key cuts and one key system schematic illustrating system usage and expansion.
        1) Forward bitting list, key cuts and key system schematic directly to Owner, by means as directed by Owner.

    f. Prepare key schedule by or under supervision of supplier, detailing Owner’s final keying instructions for locks.

4. Templates: After final approval of hardware schedule, provide templates for doors, frames and other work specified to be factory prepared for door hardware installation.

C. Informational Submittals:

1. Qualification Data: For Supplier, Installer and Architectural Hardware Consultant.
2. Product Certificates for electrified door hardware, signed by manufacturer:

    a. Certify that door hardware approved for use on types and sizes of labeled fire-rated doors complies with listed fire-rated door assemblies.

3. Certificates of Compliance:

    a. Certificates of compliance for fire-rated hardware and installation instructions if requested by Architect or Authority Having Jurisdiction.
    b. Installer Training Meeting Certification: Letter of compliance, signed by Contractor, attesting to completion of installer training meeting specified in “QUALITY ASSURANCE” article, herein.
    c. Electrified Hardware Coordination Conference Certification: Letter of compliance, signed by Contractor, attesting to completion of electrified hardware coordination conference, specified in “QUALITY ASSURANCE” article, herein.

4. Product Test Reports: For compliance with accessibility requirements, based on evaluation of comprehensive tests performed by manufacturer and witnessed by qualified testing agency, for door hardware on doors located in accessible routes.
5. Warranty: Special warranty specified in this Section.

D. Closeout Submittals:

1. Operations and Maintenance Data : Provide in accordance with Division 01 and include:

a. Complete information on care, maintenance, and adjustment; data on repair and replacement parts, and information on preservation of finishes.
b. Catalog pages for each product.
c. Name, address, and phone number of local representative for each manufacturer.
d. Parts list for each product.
e. Final approved hardware schedule, edited to reflect conditions as-installed.
f. Final keying schedule
g. Copies of floor plans with keying nomenclature
h. As-installed wiring diagrams for each opening connected to power, both low voltage and 110 volts.
i. Copy of warranties including appropriate reference numbers for manufacturers to identify project.

1.5 QUALITY ASSURANCE

A. Product Substitutions: Comply with product requirements stated in Division 01 and as specified herein.

1. Where specific manufacturer's product is named and accompanied by "No Substitute," including make or model number or other designation, provide product specified. (Note: Certain products have been selected for their unique characteristics and particular project suitability.)

a. Where no additional products or manufacturers are listed in product category, requirements for "No Substitute" govern product selection.

2. Where products indicate "acceptable manufacturers" or "acceptable manufacturers and products", provide product from specified manufacturers, subject to compliance with specified requirements and "Single Source Responsibility" requirements stated herein.

B. Supplier Qualifications and Responsibilities: Recognized architectural hardware supplier with record of successful in-service performance for supplying door hardware similar in quantity, type, and quality to that indicated for this Project and that provides certified Architectural Hardware Consultant (AHC) available to Owner, Architect, and Contractor, at reasonable times during the Work for consultation.

1. Warehousing Facilities: In Project's vicinity.
2. Scheduling Responsibility: Preparation of door hardware and keying schedules.
3. Engineering Responsibility: Preparation of data for electrified door hardware, including Shop Drawings, based on testing and engineering analysis of manufacturer's standard units in assemblies similar to those indicated for this Project.
4. Coordination Responsibility: Coordinate installation of electronic security hardware with Architect and electrical engineers and provide installation and technical data to Architect and other related subcontractors.

a. Upon completion of electronic security hardware installation, inspect and verify that all components are working properly.

C. Installer Qualifications: Qualified tradesmen, skilled in application of commercial grade hardware with record of successful in-service performance for installing door hardware similar in quantity, type, and quality to that indicated for this Project.

D. Architectural Hardware Consultant Qualifications: Person who is experienced in providing consulting services for door hardware installations that are comparable in material, design, and extent to that indicated for this Project and meets these requirements:

1. For door hardware, DHI-certified, Architectural Hardware Consultant (AHC) or 15 years equivalent experience bidding, detailing and supplying finish door hardware.
2. Can provide installation and technical data to Architect and other related subcontractors.
3. Can inspect and verify components are in working order upon completion of installation.
4. Capable of producing wiring diagrams.
5. Capable of coordinating installation of electrified hardware with Architect and electrical engineers.

E. Single Source Responsibility: Obtain each type of door hardware from single manufacturer.

1. Provide electrified door hardware from same manufacturer as mechanical door hardware, unless otherwise indicated.
2. Manufacturers that perform electrical modifications and that are listed by testing and inspecting agency acceptable to authorities having jurisdiction are acceptable.

F. Fire-Rated Door Openings: Provide door hardware for fire-rated openings that complies with NFPA 80 and requirements of authorities having jurisdiction. Provide only items of door hardware that are listed and are identical to products tested by Underwriters Laboratories, Intertek Testing Services, or other testing and inspecting organizations acceptable to authorities having jurisdiction for use on types and sizes of doors indicated, based on testing at positive pressure and according to NFPA 252 or UL 10C and in compliance with requirements of fire-rated door and door frame labels.

G. Smoke- and Draft-Control Door Assemblies: Where smoke- and draft-control door assemblies are required, provide door hardware that meets requirements of assemblies tested according to UL 1784 and installed in compliance with NFPA 105.

1. Air Leakage Rate: Maximum air leakage of 0.3 cfm/sq. ft. (3 cu. m per minute/sq. m) at tested pressure differential of 0.3-inch wg (75 Pa) of water.

H. Means of Egress Doors: Latches do not require more than 15 lbf (67 N) to release latch. Locks do not require use of key, tool, or special knowledge for operation.

I. Accessibility Requirements: For door hardware on doors in an accessible route, comply with governing accessibility regulations cited in “REFERENCES” article, herein.

1. Provide operating devices that do not require tight grasping, pinching, or twisting of wrist and that operate with force of not more than 5 lbf (22.2 N).
2. Maximum opening-force requirements:

a. Interior, Non-Fire-Rated Hinged Doors: 5 lbf (22.2 N) applied perpendicular to door.
b. Sliding or Folding Doors: 5 lbf (22.2 N) applied parallel to door at latch.
c. Fire Doors: Minimum opening force allowable by authorities having jurisdiction.

3. Bevel raised thresholds with slope of not more than 1:2. Provide thresholds not more than 1/2 inch (13 mm) high.
4. Adjust door closer sweep periods so that, from open position of 70 degrees, door will take at least 3 seconds to move to 3 inches (75 mm) from latch, measured to leading edge of door.

J. Keying Conference: Conduct conference at Project site to comply with requirements in Division 01.

1. Attendees: Owner, Contractor, Architect, and Supplier's Architectural Hardware Consultant.
2. Incorporate keying conference decisions into final keying schedule after reviewing door hardware keying system including:

   a. Function of building, flow of traffic, purpose of each area, degree of security required, and plans for future expansion.
   b. Preliminary key system schematic diagram.
   c. Requirements for key control system.
   d. Requirements for access control.
   e. Address for delivery of keys.

K. Pre-installation Conference: Conduct conference at Project site.

1. Review and finalize construction schedule and verify availability of materials, Installer's personnel, equipment, and facilities needed to make progress and avoid delays.
2. Inspect and discuss preparatory work performed by other trades.
3. Review required testing, inspecting, and certifying procedures.

L. Coordination Conferences:

1. Installation Coordination Conference: Prior to hardware installation, schedule and hold meeting to review questions or concerns related to proper installation and adjustment of door hardware.

   a. Attendees: Door hardware supplier, door hardware installer, Contractor.
   b. After meeting, provide letter of compliance to Architect, indicating when meeting was held and who was in attendance.

1.6 DELIVERY, STORAGE, AND HANDLING

A. Inventory door hardware on receipt and provide secure lock-up for hardware delivered to Project site.

B. Tag each item or package separately with identification coordinated with final door hardware schedule, and include installation instructions, templates, and necessary fasteners with each item or package.

1. Deliver each article of hardware in manufacturer's original packaging.

C. Project Conditions:

1. Maintain manufacturer-recommended environmental conditions throughout storage and installation periods.
2. Provide secure lock-up for door hardware delivered to Project, but not yet installed. Control handling and installation of hardware items so that completion of Work will not be delayed by hardware losses both before and after installation.

D. Protection and Damage:

1. Promptly replace products damaged during shipping.
2. Handle hardware in manner to avoid damage, marring, or scratching. Correct, replace or repair products damaged during Work.
3. Protect products against malfunction due to paint, solvent, cleanser, or any chemical agent.

1.7 COORDINATION

A. Coordinate layout and installation of floor-recessed door hardware with floor construction. Cast anchoring inserts into concrete. Concrete, reinforcement, and formwork requirements are specified in Division 03.

B. Installation Templates: Distribute for doors, frames, and other work specified to be factory prepared. Check Shop Drawings of other work to confirm that adequate provisions are made for locating and installing door hardware to comply with indicated requirements.

C. Direct shipments not permitted, unless approved by Contractor.

1.8 WARRANTY

A. Special Warranty: Manufacturer's standard form in which manufacturer agrees to repair or replace components of door hardware that fail in materials or workmanship within specified warranty period.

1. Warranty Period: Years from date of Substantial Completion, for durations indicated.

a. Closers:
1) Mechanical: 25 years.

b. Exit Devices:
1) Mechanical: 3 years.

c. Locksets:
1) Mechanical: 10 years.

2. Warranty does not cover damage or faulty operation due to improper installation, improper use or abuse.

1.9 MAINTENANCE

A. Maintenance Tools:

1. Furnish complete set of special tools required for maintenance and adjustment of hardware, including changing of cylinders.

PART 2 - PRODUCTS

2.1 MANUFACTURERS

A. Approval of manufacturers and/or products other than those listed as ”Scheduled Manufacturer ” or “Acceptable Manufacturers” in the individual article for the product category shall be in accordance with QUALITY ASSURANCE article, herein.

B. Approval of products from manufacturers indicated in “Acceptable Manufacturers” is contingent upon those products providing all functions and features and meeting all requirements of scheduled manufacturer’s product.

C. Hand of Door: Drawings show direction of slide, swing, or hand of each door leaf. Furnish each item of hardware for proper installation and operation of door movement as shown.

D. Where specified hardware is not adaptable to finished shape or size of members requiring hardware, furnish suitable types having same operation and quality as type specified, subject to Architect's approval.

2.2 MATERIALS

A. Fasteners

1. Provide hardware manufactured to conform to published templates, generally prepared for machine screw installation.
2. Furnish screws for installation with each hardware item. Finish exposed (exposed under any condition) screws to match hardware finish, or, if exposed in surfaces of other work, to match finish of this other work including prepared for paint surfaces to receive painted finish.
3. Provide concealed fasteners for hardware units exposed when door is closed except when no standard units of type specified are available with concealed fasteners. Do not use thru-bolts for installation where bolt head or nut on opposite face is exposed in other work unless thru-bolts are required to fasten hardware securely. Review door specification and advise Architect if thru-bolts are required.
4. Install hardware with fasteners provided by hardware manufacturer.

B. Provide screws, bolts, expansion shields, drop plates and other devices necessary for hardware installation.

1. Where fasteners are exposed to view: Finish to match adjacent door hardware material.

2.3 HINGES

A. Manufacturers and Products:

1. Scheduled Manufacturer and Product: Ives 5BB series (IVE)
2. Acceptable Manufacturers and Products: Hager BB series, Bommer BB5000 series, Stanley FBB Series

B. Requirements:

1. Provide five-knuckle ball bearing hinges conforming to ANSI/BHMA A156.1.
2. 1-3/4 inch (44 mm) thick doors, up to and including 36 inches (914 mm) wide:

   a. Exterior: Standard weight, steel, 4-1/2 inches (114 mm) high
   b. Interior: Standard weight, steel, 4-1/2 inches (114 mm) high

3. 1-3/4 inch (44 mm) thick doors over 36 inches (914 mm) wide:

   a. Exterior: Heavy weight, steel, 5 inches (127 mm) high
   b. Interior: Heavy weight, steel, 5 inches (127 mm) high

4. 2 inches or thicker doors:

   a. Exterior: Heavy weight, steel, 5 inches (127 mm) high
   b. Interior: Heavy weight, steel, 5 inches (127 mm) high

5. Provide three hinges per door leaf for doors 90 inches (2286 mm) or less in height, and one additional hinge for each 30 inches (762 mm) of additional door height.
6. Where new hinges are specified for existing doors or existing frames, provide new hinges of identical size to hinge preparation present in existing door or existing frame.
7. Hinge Pins: Except as otherwise indicated, provide hinge pins as follows:

   a. Steel Hinges: Steel pins
   b. Non-Ferrous Hinges: Stainless steel pins
   c. Out-Swinging Exterior Doors: Non-removable pins
   d. Out-Swinging Interior Lockable Doors: Non-removable pins
   e. Interior Non-lockable Doors: Non-rising pins

8. Width of hinges: 4-1/2 inches (114 mm) at 1-3/4 inch (44 mm) thick doors, and 5 inches (127 mm) at 2 inches (51 mm) or thicker doors. Adjust hinge width as required for door, frame, and wall conditions to allow proper degree of opening.
9. Doors 36 inches (914 mm) wide or less furnish hinges 4-1/2 inches (114 mm) high; doors greater than 36 inches (914 mm) wide furnish hinges 5 inches (127 mm) high, heavy weight.

2.4 FLUSH BOLTS

A. Manufacturers:

1. Scheduled Manufacturer: Ives (IVE)
2. Acceptable Manufacturers: Burns, Rockwood

B. Requirements:

1. Provide automatic, constant latching, and manual flush bolts with forged bronze or stainless steel face plates, extruded brass levers, and with wrought brass guides and strikes. Provide 12 inch (305 mm) steel or brass rods at doors up to 90 inches (2286 mm) in height. For doors over 90 inches (2286 mm) in height increase top rods by 6 inches (152 mm) for each additional 6 inches (152 mm) of door height. Provide dust-proof strikes at each bottom flush bolt.

2.5 CYLINDRICAL LOCKS – GRADE 1

A. Manufacturers and Products:

1. Scheduled Manufacturer and Product: Best 9k Series (BES)
2. Acceptable Manufacturers and Products: None – Owner's Standard

B. Requirements:

1. Provide cylindrical locks conforming to ANSI/BHMA A156.2 Series 4000, Grade 1. Cylinders: Refer to "KEYING" article, herein.
2. Provide locks with standard 2-3/4 inches (70 mm) backset, unless noted otherwise, with a 1/2 inch (13 mm) latch throw. Provide proper latch throw for UL listing at pairs.
3. Provide locksets with separate anti-rotation thru-bolts, and no exposed screws.
4. Provide independently operating levers with two external return spring cassettes mounted under roses to prevent lever sag.
5. Provide standard ASA strikes unless extended lip strikes are necessary to protect trim.
6. Provide electrified options as scheduled in the hardware sets.
7. Lever Trim: Solid cast levers without plastic inserts, and wrought roses on both sides.

   a. Lever Design: 15D.
   b. Tactile Warning (Knurling): Where required by authority having jurisdiction. Provide on levers on exterior (secure side) of doors serving rooms considered to be hazardous.

2.6 EXIT DEVICES

A. Manufacturers and Products:

1. Scheduled Manufacturer and Product: Von Duprin 99 Series (VON)
2. Acceptable Manufacturers and Products: Sargent 19-43-GL-80 Series

B. Requirements:

1. Provide exit devices tested to ANSI/BHMA A156.3 Grade 1, and UL listed for Panic Exit or Fire Exit Hardware. Cylinders: Refer to "KEYING" article, herein.
2. Exit Devices: Touchpad type, fabricated of brass, bronze, stainless steel, or aluminum, plated to standard architectural finishes to match balance of door hardware.
3. Touchpad: Extend minimum of one half of door width. Match exit device finish or provide compatible finish. No plastic inserts are allowed in touchpads.
4. Provide devices with deadlatching feature for security and for future addition of alarm kits and other electrical requirements.

5. Provide flush end caps for exit devices.
6. Provide manufacturer's standard strikes.
7. Provide exit devices cut to door width and height. Install exit devices at height recommended by exit device manufacturer, allowable by governing building codes, and approved by Architect.
8. Mount mechanism case flush on face of doors, or provide spacers to fill gaps behind devices. Where glass trim or molding projects off face of door, provide glass bead kits.
9. Provide hex-key dogging at non-fire-rated exit devices.
10. Removable Mullions: 2 inches (51 mm) x 3 inches (76 mm) steel tube. Where scheduled as keyed removable mullion, provide type that can be removed by use of a keyed cylinder, which is self-locking when re-installed.
11. Where lever handles are specified as outside trim for exit devices, provide heavy-duty lever trims with forged or cast escutcheon plates. Provide vandal-resistant levers that will travel to 90-degree down position when more than 35 pounds of torque are applied, and which can easily be re-set.

    a. Lever Style: Match lever style of locksets.
    b. Tactile Warning (Knurling): Where required by authority having jurisdiction. Provide on levers on exterior (secure side) of doors serving rooms considered to be hazardous.

12. Provide UL labeled fire exit hardware for fire rated openings.
13. Field drill weep holes per manufacturer’s recommendation for exit devices used in full exterior application, highly corrosive areas, and where noted in the hardware sets.
14. Provide electrified options as scheduled in the hardware sets.

2.7 CYLINDERS

A. Manufacturers:

1. Scheduled Manufacturer: Best
2. Acceptable Manufacturers: None – Owner’s Standard

B. Requirements:

1. Provide cylinders/cores, from the same manufacturer of locksets, compliant with ANSI/BHMA A156.5; latest revision, Section 12, Grade 1; permanent cylinders; cylinder face finished to match lockset, manufacturer’s series as indicated. Refer to “KEYING” article, herein.
2. Provide cylinders in the below-listed configuration(s), distributed throughout the Project as indicated.

    a. Match Owner’s Existing Best keyway.
    b. Nickel silver bottom pins.

3. Temporary Construction Cylinder Keying.

    a. Provide construction cores that permit voiding construction keys without cylinder removal, furnished in accordance with the following requirements.
        1) SFIC Construction Core Keying System.

2) 12 construction change (day) keys.

b. Owner or Owner's Representative will void operation of temporary construction keys and install permanent SFIC cores..

2.8 KEYING

A. Requirements:

1. Provide permanent cylinders/cores keyed by the manufacturer according to the following key system.

   a. Master Keying system as directed by the Owner.

2. Forward bitting list and keys separately from cylinders, by means as directed by Owner. Failure to comply with forwarding requirements shall be cause for replacement of cylinders/cores involved at no additional cost to Owner.
3. Provide keys with the following features.

   a. Material: Nickel silver; minimum thickness of .107-inch (2.3mm)

4. Identification:

   a. Mark permanent cylinders/cores and keys with applicable blind code per DHI publication "Keying Systems and Nomenclature" for identification. Blind code marks shall not include actual key cuts.
   b. Identification stamping provisions must be approved by the Owner.
   c. Stamp cylinders/cores and keys with Owner's unique key system facility code as established by the manufacturer; key symbol and embossed or stamped with "DO NOT DUPLICATE".
   d. Failure to comply with stamping requirements shall be cause for replacement of keys involved at no additional cost to Owner.
   e. Forward permanent keys to Owner, by means as directed by Owner.

5. Quantity: Furnish in the following quantities.

   a. Change (Day) Keys: 3 per cylinder/core.
   b. Master Keys: 6.
   c. Unused balance of key blanks shall be furnished to Owner with the cut keys.

2.9 KEY CONTROL SYSTEM

A. Manufacturers:

1. Scheduled Manufacturer: Telkee
2. Acceptable Manufacturers: HPC, Lund

B. Requirements:

1. Provide key control system, including envelopes, labels, tags with self-locking key clips, receipt forms, 3-way visible card index, temporary markers, permanent markers, and standard metal cabinet, all as recommended by system manufacturer, with capacity for 150% of number of locks required for Project.

    a. Provide complete cross index system set up by hardware supplier, and place keys on markers and hooks in cabinet as determined by final key schedule.
    b. Provide hinged-panel type cabinet for wall mounting.

2.10 DOOR CLOSERS

A. Manufacturers and Products:

1. Scheduled Manufacturer and Product: LCN 4050 series (LCN)
2. Acceptable Manufacturers and Products: Norton 7500 series, Sargent 351 series.

B. Requirements:

1. Provide door closers conforming to ANSI/BHMA A156.4 Grade 1 requirements by BHMA certified independent testing laboratory. ISO 9000 certify closers. Stamp units with date of manufacture code.
2. Provide door closers with fully hydraulic, full rack and pinion action with cast aluminum cylinder.
3. Closer Body: 1-1/2 inch (38 mm) diameter with 11/16 inch (17 mm) diameter heat-treated pinion journal and full complement bearings.
4. Hydraulic Fluid: Fireproof, passing requirements of UL10C, and all weather requiring no seasonal closer adjustment for temperatures ranging from 120 degrees F to -30 degrees F.
5. Spring Power: Continuously adjustable over full range of closer sizes, and providing reduced opening force as required by accessibility codes and standards.
6. Hydraulic Regulation: By tamper-proof, non-critical valves, with separate adjustment for latch speed, general speed, and back check.
7. Pressure Relief Valve (PRV) Technology: Not permitted.
8. Provide stick on templates, special templates, drop plates, mounting brackets, or adapters for arms as required for details, overhead stops, and other door hardware items interfering with closer mounting.

2.11 DOOR TRIM

A. Manufacturers:

1. Scheduled Manufacturer: Ives (IVE)
2. Acceptable Manufacturers: Burns, Rockwood

B. Requirements:

1. Provide push plates 4 inches (102 mm) wide by 16 inches (406 mm) high by 0.050 inch (1 mm) thick and beveled 4 edges. Where width of door stile prevents use of 4 inches (102 mm) wide plate, adjust width to fit.

2. Provide push bars of solid bar stock, diameter and length as scheduled. Provide push bars of sufficient length to span from center to center of each stile. Where required, mount back to back with pull.
3. Provide offset pulls of solid bar stock, diameter and length as scheduled. Where required, mount back to back with push bar.
4. Provide flush pulls as scheduled. Where required, provide back-to-back mounted model.
5. Provide pulls of solid bar stock, diameter and length as scheduled. Where required, mount back to back with push bar.
6. Provide pull plates 4 inches (102 mm) wide by 16 inches (406 mm) high by 0.050 inch (1 mm) thick, beveled 4 edges, and prepped for pull. Where width of door stile prevents use of 4 inches (102 mm) wide plate, adjust width to fit.
7. Provide wire pulls of solid bar stock, diameter and length as scheduled.
8. Provide decorative pulls as scheduled. Where required, mount back to back with pull.

2.12 PROTECTION PLATES

A. Manufacturers:

1. Scheduled Manufacturer: Ives (IVE)
2. Acceptable Manufacturers: Burns, Rockwood

B. Requirements:

1. Provide kick plates, mop plates, and armor plates minimum of 0.050 inch (1 mm) thick, beveled four edges as scheduled. Furnish with sheet metal or wood screws, finished to match plates.
2. Sizes of plates:

   a. Kick Plates: 10 inches (254 mm) high by 2 inches (51 mm) less width of door on single doors, 1 inch (25 mm) less width of door on pairs
   b. Mop Plates: 4 inches (102 mm) high by 2 inches (51 mm) less width of door on single doors, 1 inch (25 mm) less width of door on pairs
   c. Armor Plates: 36 inches (914 mm) high by 2 inches (51 mm) less width of door on single doors, 1 inch (25 mm) less width of door on pairs.

2.13 OVERHEAD STOPS AND OVERHEAD STOP/HOLDERS

A. Manufacturers:

1. Scheduled Manufacturers: Glynn-Johnson (GLY)
2. Acceptable Manufacturers: Rixson, Sargent

B. Requirements:

1. Provide heavy duty concealed mounted overhead stop or holder as specified for exterior and interior vestibule single acting doors.
2. Provide heavy duty concealed mounted overhead stop or holder as specified for double acting doors.

3. Provide heavy or medium duty and concealed or surface mounted overhead stop or holder for interior doors as specified. Provide medium duty surface mounted overhead stop for interior doors and at any door that swings more than 140 degrees before striking wall, open against equipment, casework, sidelights, and where conditions do not allow wall stop or floor stop presents tripping hazard.
4. Where overhead holders are specified provide friction type at doors without closer and positive type at doors with closer.

2.14 DOOR STOPS AND HOLDERS

A. Manufacturers:

1. Scheduled Manufacturer: Ives (IVE)
2. Acceptable Manufacturers: Burns, Rockwood

B. Provide door stops at each door leaf:

1. Provide wall stops wherever possible. Provide convex type where mortise type locks are used and concave type where cylindrical type locks are used.
2. Where a wall stop cannot be used, provide universal floor stops for low or high rise options.
3. Where wall or floor stop cannot be used, provide medium duty surface mounted overhead stop.

2.15 THRESHOLDS, SEALS, DOOR SWEEPS, AUTOMATIC DOOR BOTTOMS, AND GASKETING

A. Manufacturers:

1. Scheduled Manufacturer: Zero International (ZER)
2. Acceptable Manufacturers: National Guard, Reese

B. Requirements:

1. Provide thresholds, weather-stripping (including door sweeps, seals, and astragals) and gasketing systems (including smoke, sound, and light) as specified and per architectural details. Match finish of other items.
2. Size of thresholds:

   a. Saddle Thresholds: 1/2 inch (13 mm) high by jamb width by door width
   b. Bumper Seal Thresholds: 1/2 inch (13 mm) high by 5 inches (127 mm) wide by door width

3. Provide door sweeps, seals, astragals, and auto door bottoms only of type where resilient or flexible seal strip is easily replaceable and readily available.

2.16 SILENCERS

A. Manufacturers:

1. Scheduled Manufacturer: Ives (IVE)
2. Acceptable Manufacturers: Burns, Rockwood

B. Requirements:

1. Provide "push-in" type silencers for hollow metal or wood frames.
2. Provide one silencer per 30 inches (762 mm) of height on each single frame, and two for each pair frame.
3. Omit where gasketing is specified.

2.17 FINSHES

A. Finish: BHMA 626/652 (US26D); except:

1. Push Plates, Pulls, and Push Bars: BHMA 630 (US32D)
2. Protection Plates: BHMA 630 (US32D)
3. Door Closers: Powder Coat to Match
4. Wall Stops: BHMA 630 (US32D)
5. Latch Protectors: BHMA 630 (US32D)
6. Weatherstripping: Clear Anodized Aluminum
7. Thresholds: Mill Finish Aluminum

PART 3 - EXECUTION

3.1 EXAMINATION

A. Prior to installation of hardware, examine doors and frames, with Installer present, for compliance with requirements for installation tolerances, labeled fire-rated door assembly construction, wall and floor construction, and other conditions affecting performance.

B. Proceed with installation only after unsatisfactory conditions have been corrected.

3.2 PREPARATION

A. Where on-site modification of doors and frames is required:

1. Carefully remove existing door hardware and components being reused. Clean, protect, tag, and store in accordance with storage and handling requirements specified herein.
2. Field modify and prepare existing door and frame for new hardware being installed.
3. When modifications are exposed to view, use concealed fasteners, when possible.
4. Prepare hardware locations and reinstall in accordance with installation requirements for new door hardware and with:

a. Steel Doors and Frames: For surface applied door hardware, drill and tap doors and frames according to ANSI/SDI A250.6.
b. Wood Doors: DHI WDHS.5 "Recommended Hardware Reinforcement Locations for Mineral Core Wood Flush Doors."
c. Doors in rated assemblies: NFPA 80 for restrictions on on-site door hardware preparation.

3.3 INSTALLATION

A. Mounting Heights: Mount door hardware units at heights to comply with the following, unless otherwise indicated or required to comply with governing regulations.

1. Standard Steel Doors and Frames: ANSI/SDI A250.8.
2. Custom Steel Doors and Frames: HMMA 831.
3. Wood Doors: DHI WDHS.3, "Recommended Locations for Architectural Hardware for Wood Flush Doors."

B. Install each hardware item in compliance with manufacturer's instructions and recommendations, using only fasteners provided by manufacturer.

C. Do not install surface mounted items until finishes have been completed on substrate. Protect all installed hardware during painting.

D. Set units level, plumb and true to line and location. Adjust and reinforce attachment substrate as necessary for proper installation and operation.

E. Drill and countersink units that are not factory prepared for anchorage fasteners. Space fasteners and anchors according to industry standards.

F. Install operating parts so they move freely and smoothly without binding, sticking, or excessive clearance.

G. Hinges: Install types and in quantities indicated in door hardware schedule but not fewer than quantity recommended by manufacturer for application indicated or one hinge for every 30 inches (750 mm) of door height, whichever is more stringent, unless other equivalent means of support for door, such as spring hinges or pivots, are provided.

H. Key Control System: Tag keys and place them on markers and hooks in key control system cabinet, as determined by final keying schedule.

I. Door Closers: Mount closers on room side of corridor doors, inside of exterior doors, and stair side of stairway doors from corridors. Closers shall not be visible in corridors, lobbies and other public spaces unless approved by Architect.

J. Closer/Holders: Mount closer/holders on room side of corridor doors, inside of exterior doors, and stair side of stairway doors.

K. Thresholds: Set thresholds in full bed of sealant complying with requirements specified in Division 07 Section "Joint Sealants."

L. Stops: Provide floor stops for doors unless wall or other type stops are indicated in door hardware schedule. Do not mount floor stops where they may impede traffic or present tripping hazard.

M. Perimeter Gasketing: Apply to head and jamb, forming seal between door and frame.

N. Meeting Stile Gasketing: Fasten to meeting stiles, forming seal when doors are closed.

O. Door Bottoms: Apply to bottom of door, forming seal with threshold when door is closed.

3.4 FIELD QUALITY CONTROL

A. Architectural Hardware Consultant: Engage Architect's Architectural Hardware Consultant to perform inspections and to prepare inspection reports.

1. Architectural Hardware Consultant will inspect door hardware and state in each report whether installed work complies with or deviates from requirements, including whether door hardware is properly installed and adjusted.

3.5 ADJUSTING

A. Initial Adjustment: Adjust and check each operating item of door hardware and each door to ensure proper operation or function of every unit. Replace units that cannot be adjusted to operate as intended. Adjust door control devices to compensate for final operation of heating and ventilating equipment and to comply with referenced accessibility requirements.

1. Door Closers: Adjust sweep period to comply with accessibility requirements and requirements of authorities having jurisdiction.

3.6 CLEANING AND PROTECTION

A. Clean adjacent surfaces soiled by door hardware installation.

B. Clean operating items as necessary to restore proper function and finish.

C. Provide final protection and maintain conditions that ensure door hardware is without damage or deterioration at time of Substantial Completion.

3.7 DEMONSTRATION

A. Provide training for Owner's maintenance personnel to adjust, operate, and maintain door hardware and door hardware finishes. Refer to Division 01 Section "Demonstration and Training."

3.8 DOOR HARDWARE SCHEDULE

A. Locksets, exit devices, and other hardware items are referenced in the following hardware sets for series, type and function. Refer to the above-specifications for special features, options, cylinders/keying, and other requirements.

B. Hardware Sets:

HARDWARE SET: 01

DOOR NUMBER:
100

EACH TO HAVE:

2 EA	CONT. HINGE	112HD	628	IVE
1 EA	REMOVABLE MULLION	KR4954-STAB-ANGLE PLATE	689	VON
1 EA	PANIC HARDWARE	99-EO	626	VON
1 EA	PANIC HARDWARE	99-NL-OP-110MD	626	VON
1 EA	RIM CYLINDER	1E72	626	BES
1 EA	MORTISE CYLINDER	1E74	626	BES
2 EA	OFFSET PULL	8190HD-10"	630	IVE
2 EA	OH STOP	900S SHIM INSTALL OH STOP BEFORE INSTALLING DOOR CLOSER	630	GLY
2 EA	SURFACE CLOSER	4050 TOP JAMB	689	LCN
2 EA	MOUNTING PLATE	4050-18G	689	LCN
1 EA	MULLION SEAL	8780N X D.H.	BLK	ZER
2 EA	DOOR SWEEP	39A X D.W.	719	ZER
1 EA	THRESHOLD	8655A X D.W.	719	ZER
1 SET	SEALS	BY ALUMINUM FRAME SUPPLIER		

HARDWARE SET: 02

DOOR NUMBER:
100B 111B

EACH TO HAVE:

2 EA	CONT. HINGE	112HD	628	IVE
2 SET	PUSH/PULL BAR	9190HD-10"	630	IVE

2 EA	SURFACE CLOSER	4050 TOP JAMB	689	LCN
2 EA	MOUNTING PLATE	4050-18G	689	LCN
2 EA	WALL STOP	WS407CVX	630	IVE
1 SET	SEALS	BY ALUMINUM FRAME SUPPLIER		

180° SWING LHR LEAF @ DOOR 100B

HARDWARE SET: 03

DOOR NUMBER:
101 106 107 109 110

EACH TO HAVE:

3 EA	HINGE	5BB1 4.5 X 4.5	652	IVE
1 EA	ENTRY LOCK	9K37AB 15D	626	BES
1 EA	WALL STOP	WS407CCV	630	IVE
3 EA	SILENCER	SR64	GRY	IVE

HARDWARE SET: 04

DOOR NUMBER:
102

EACH TO HAVE:

6 EA	HINGE	5BB1 4.5 X 4.5 NRP	652	IVE
1 SET	AUTO FLUSH BOLT	FB31P	630	IVE
1 EA	DUST PROOF STRIKE	DP2	626	IVE
1 EA	CLASSROOM LOCK	9K37R 15D 3/4	626	BES
1 EA	COORDINATOR	COR X FL	628	IVE
2 EA	MOUNTING BRACKET	MB	689	IVE
2 EA	SURFACE CLOSER	4050 EDA TB	689	LCN
2 EA	KICK PLATE	8400 10" X 2" LDW B-CS	630	IVE
2 EA	WALL STOP	WS407CCV	630	IVE
1 SET	SEALS	188S X D.S.	BLK	ZER
1 EA	ASTRAGAL	44SP X 188S X D.H.	600	ZER
2 EA	DOOR BOTTOM	111A X D.W.	719	ZER
1 EA	THRESHOLD	8655A X D.W.	719	ZER

HARDWARE SET: 05

DOOR NUMBER:
102A 102B

EACH TO HAVE:

3 EA	HW HINGE	5BB1HW 4.5 X 4.5 NRP	652	IVE
1 EA	PANIC HARDWARE	99-L-06	626	VON
1 EA	RIM CYLINDER	1E72	626	BES
1 EA	SURFACE CLOSER	4050 SCUSH TB	689	LCN
1 EA	KICK PLATE	8400 10" X 2" LDW B-CS	630	IVE
1 EA	DRIP CAP	142A X D.W. +4"	719	ZER
1 SET	SEALS	8303AA X D.S.	719	ZER
1 EA	DOOR SWEEP	39A X D.W.	719	ZER
1 EA	THRESHOLD	8655A X D.W.	719	ZER

HARDWARE SET: 06

DOOR NUMBER:
102C

EACH TO HAVE:

ALL HARDWARE BY DOOR / FRAME
MANUFACTURER

HARDWARE SET: 07

DOOR NUMBER:
103

EACH TO HAVE:

3 EA	HINGE	5BB1 4.5 X 4.5	652	IVE
1 EA	CLASSROOM LOCK	9K37R 15D	626	BES
1 EA	SURFACE CLOSER	4050 REG TB	689	LCN
1 EA	KICK PLATE	8400 10" X 2" LDW B-CS	630	IVE
1 EA	WALL STOP	WS407CVX	630	IVE
3 EA	SILENCER	SR64	GRY	IVE

HARDWARE SET: 08

DOOR NUMBER:
104 105 113

EACH TO HAVE:

3 EA	HINGE	5BB1 4.5 X 4.5	652	IVE
1 EA	STOREROOM LOCK	9K37D 15D	626	BES
1 EA	SURFACE CLOSER	4050 REG TB	689	LCN
1 EA	KICK PLATE	8400 10" X 2" LDW B-CS	630	IVE
1 EA	WALL STOP	WS407CVX	630	IVE
3 EA	SILENCER	SR64	GRY	IVE

HARDWARE SET: 09

DOOR NUMBER:
111

EACH TO HAVE:

2 EA	CONT. HINGE	112HD	628	IVE
1 EA	REMOVABLE MULLION	KR4954-STAB-ANGLE PLATE	689	VON
1 EA	PANIC HARDWARE	99-EO	626	VON
1 EA	PANIC HARDWARE	99-NL-OP-110MD	626	VON
1 EA	RIM CYLINDER	1E72	626	BES
1 EA	MORTISE CYLINDER	1E74	626	BES
2 EA	OFFSET PULL	8190HD-10"	630	IVE
2 EA	SURFACE CLOSER	4050 TOP JAMB	689	LCN
2 EA	MOUNTING PLATE	4050-18G	689	LCN
2 EA	WALL STOP	WS407CVX	630	IVE
1 EA	MULLION SEAL	8780N X D.H.	BLK	ZER
2 EA	DOOR SWEEP	39A X D.W.	719	ZER
1 EA	THRESHOLD	8655A X D.W.	719	ZER
1 SET	SEALS	BY ALUMINUM FRAME SUPPLIER		

HARDWARE SET: 10

DOOR NUMBER:
112 114 115

EACH TO HAVE:

3 EA	HW HINGE	5BB1HW 4.5 X 4.5	652	IVE
1 EA	PUSH PLATE	8200 4" X 16"	630	IVE
1 EA	PULL PLATE	8302 6" 4" X 16"	630	IVE
1 EA	SURFACE CLOSER	4050 REG TB	689	LCN
1 EA	KICK PLATE	8400 10" X 2" LDW B-CS	630	IVE
1 EA	WALL STOP	WS407CVX	630	IVE
3 EA	SILENCER	SR64	GRY	IVE

HARDWARE SET: 11

DOOR NUMBER:
117

EACH TO HAVE:

3 EA	HINGE	5BB1 4.5 X 4.5 NRP	652	IVE
1 EA	PANIC HARDWARE	99-NL	626	VON
1 EA	RIM CYLINDER	1E72	626	BES
1 EA	SURFACE CLOSER	4050 SCUSH TB	689	LCN
1 EA	KICK PLATE	8400 10" X 2" LDW B-CS	630	IVE
1 EA	DRIP CAP	142A X D.W. +4"	719	ZER
1 SET	SEALS	8303AA X D.S.	719	ZER
1 EA	DOOR SWEEP	39A X D.W.	719	ZER
1 EA	THRESHOLD	8655A X D.W.	719	ZER

END OF SECTION

SECTION 08 80 00 - GLAZING

PART 1 - GENERAL

1.1 RELATED DOCUMENTS: Drawings and general provisions of the Contract, including General and Supplementary Conditions and Division 01 Specification Sections, apply to this Section.

1.2 SUMMARY

A. This Section includes glazing for the following products and applications, including those specified in other Sections where glazing requirements are specified by reference to this Section:
1. Windows.
2. Doors.
3. Interior borrowed lites.

B. Related Sections: The following sections contain requirements that relate to this Section.

1. Division 08 Section "Hollow Metal Doors and Frames".
2. Division 08 Section “Aluminum

1.3 SUBMITTALS

A. General: Submit the following according to Conditions of Contract and Division 01 Specification Sections.

B. Product data for each glass product and glazing material indicated.

C. Samples for verification purposes of 12-inch-square samples of each type of glass indicated except for clear monolithic glass products, and 12-inch-long samples of each color required (except black) for each type of sealant or gasket exposed to view.

D. Maintenance data for glass and other glazing materials to include in Operating and Maintenance Manual specified in Division 01.

1.4 QUALITY ASSURANCE

A. Glazing Publications: Comply with published recommendations of glass product manufacturers and organizations below, except where more stringent requirements are indicated. Refer to these publications for glazing terms not otherwise defined in this Section or in referenced standards.
1. FGMA Publications: "FGMA Glazing Manual."
2. LSGA Publications: "LSGA Design Guide."
3. SIGMA Publications: TM-3000 "Vertical Glazing Guidelines".

B. Glazier Qualifications: Engage an experienced glazier who has completed glazing similar in material, design, and extent to that indicated for Project with a record of successful in-service performance.

C. Single-Source Responsibility for Glass: Obtain glass from one source for each product indicated below:
1. Primary glass of each (ASTM C 1036) type and class indicated.

2. Heat-treated glass of each (ASTM C 1048) condition indicated.
3. Insulating glass of each construction indicated.
4. Fire resistive Glass of each type indicated.

D. Single-Source Responsibility for Glazing Accessories: Obtain glazing accessories from one source for each product and installation method indicated.

1.5 DELIVERY, STORAGE, AND HANDLING

A. Protect glazing materials to comply with manufacturer's directions and as needed to prevent damage to glass and glazing materials from condensation, temperature changes, direct exposure to sun, or other causes.
1. Where insulating glass units will be exposed to substantial altitude changes, comply with insulating glass fabricator's recommendations for venting and sealing to avoid hermetic seal ruptures.

1.6 PROJECT CONDITIONS

A. Environmental Conditions: Do not proceed with glazing when ambient and substrate temperature conditions are outside the limits permitted by glazing materials manufacturer or when glazing channel substrates are wet from rain, frost, condensation, or other causes.
1. Install liquid sealants at ambient and substrate temperatures above 40 deg F.

1.9 WARRANTY

A. General: Warranties specified in this Article shall not deprive the Owner of other rights the Owner may have under other provisions of the Contract Documents and will be in addition to and run concurrent with other warranties made by the Contractor under requirements of the Contract Documents.

B. Warranty on Hermetic Seals: Provide insulating glass manufacturer's written warranty, agreeing to, within specified warranty period, furnish FOB project site, replacement units for insulating glass units which have defective hermetic seals (excluding that due to glass breakage); defined to include intrusion of moisture or dirt, internal condensation at temperatures above minus 20 degrees F (minus 31 degrees C), deterioration of internal glass coatings, and other visual evidence of seal failure or performance failure; provided the manufacturer's instructions for handling, installation, protection, and maintenance have been adhered to during warranty period.

C. Warranty period is ten years after seal date permanently imprinted on unit, but not less than nine years after date of substantial completion.

PART 2 - PRODUCTS

2.1 PRIMARY FLOAT GLASS PRODUCTS

A. Float Glass: ASTM C 1036, Type I (transparent glass, flat), Class as indicated below, and Quality q3 (glazing select).
1. Class 1 (clear) where indicated.
2. Class 2 (tinted, heat-absorbing, and light-reducing) where indicated.

B. Refer to requirements for sealed insulating glass units for performance characteristics of

assembled units composed of tinted glass, coated or uncoated, relative to visible light transmittance, U-values, shading coefficient, and visible reflectance.

2.2 HEAT-TREATED FLOAT GLASS PRODUCTS, GENERAL

A. Fabrication Process: Horizontal (roller-hearth) process.
B. Tempered Glass: Provide prime glass of color and type indicated, which has been heat treated to strengthen glass in bending to not less than 4.5 times annealed strengthen.
C. Heat-Strengthened Glass: Provide prime glass of color and type indicated, which has been heat-treated to strengthen bending to not less than 2 times annealed strength.

2.3 HEAT-TREATED FLOAT GLASS

A. Uncoated, Clear, Heat-Treated Float Glass: ASTM C 1048, Condition A (uncoated surfaces), Type I (transparent glass, flat), Class 1 (clear), Quality q3 (glazing select), kind as indicated below.
   1. Kind FT (fully tempered) where indicated.

B. Uncoated, Tinted, Heat-Treated Float Glass: ASTM C 1048, Condition A (uncoated surfaces), Type I (transparent glass, flat), Class 2 (tinted heat-absorbing and light-reducing), Quality q3 (glazing select), with tint color and performance characteristics for 6.0-mm-thick (0.23-inch-thick) glass matching those indicated for annealed primary tinted float glass; kind as indicated below:
   1. Kind FT (fully tempered) where indicated and all locations as required by code.
   2. Solar gray tint and clear at exterior locations indicated and clear at interior locations indicated.

2.4 INSULATING GLASS

A. Manufacturers: Subject to compliance with requirements, provide products by one of the following:

   1)PPG Solarban 70 XL (2) Starphire at north facing spaces and as indicated on the drawings.
   2)PPG Solarban 70 XL (3) Gray at south, east and west facing spaces and/or locations indicated on the drawings.
   3)Prior Approved equals will be considered prior to bidding if properly submitted for review and acknowledged by Addenda.

B. Insulating-Glass Units: Factory-assembled units consisting of sealed lites of glass separated by a dehydrated interspace, qualified according to ASTM E 2190, and complying with other requirements specified.

   1)Sealing System: Dual seal, with manufacturer's standard primary and secondary.
   2)Spacer: Aluminum with mill or clear anodic finish.
   3)Desiccant: Molecular sieve or silica gel, or blend of both.

C. Glass: Comply with applicable requirements in "Glass Products" Article as indicated by designations in "Insulating-Glass Types" Article.
   1. Coated Glass: (Translucent Glazing) Ceramic-Coated Spandrel Glass: ASTM C 1048, Type I, Condition B, Quality-Q3.

2.5 ELASTOMERIC GLAZING SEALANTS

A. General: Provide products of type indicated, complying with the following requirements:

1. Compatibility: Select glazing sealants and tapes of proven compatibility with other materials they will contact, including glass products, seals of insulating glass units, and glazing channel substrates, under conditions of installation and service, as demonstrated by testing and field experience.
2. Suitability: Comply with sealant and glass manufacturer's recommendations for selecting glazing sealants and tapes that are suitable for applications indicated and conditions existing at time of installation.
3. Provide color of exposed sealant/compound as selected by Architect from the manufacturer's standard colors, or black if no color is so selected.

B. Elastomeric Glazing Sealant Standard: Provide manufacturer's standard chemically curing, elastomeric sealants of base polymer indicated that comply with ASTM C 920 requirements.

1. Two-Part Polysulfide Glazing Sealants: Elastomeric polysulfide sealant complying with FS TT-S-227, Class A, Type 2; specially compounded and tested to show a minimum of twenty years resistance to deterioration in normal glazing applications.
2. One-part Silicone Rubber Glazing Sealant: Elastomeric silicone sealant complying with FS TT-S-00230, Class A, Type II, compounded specifically for exterior exposed glazing.
3. Preformed Butyl Rubber Glazing Sealant: Compound of polymerized butyl rubber and inert fillers, with or without polyisobutylene modification; solvent-based, 95% solids, formed and coiled on release paper; tack-free in 24 hours, paintable, nonstaining, plain, preshimmed or reinforced as required for proper installation and setting of glass.

2.6 GLAZING GASKETS

A. Subject to requirements of framing system manufacturer and condition of the installation, provide:

1. Dense Compression Gaskets: Molded or extruded gaskets of material indicated below, complying with standards referenced with name of elastomer indicated below, and of profile and hardness required to maintain watertight seal:

   a. Neoprene, ASTM C 864.

2. Soft Compression Gaskets: Extruded or molded closed-cell, integral-skinned gaskets of material indicated below, complying with ASTM C 509, Type II, black, and of profile and hardness required to maintain watertight seal:

   a. Neoprene.

2.7 MISCELLANEOUS GLAZING MATERIALS

A. General: Provide products of material, size, and shape complying with referenced glazing standard, requirements of manufacturers of glass and other glazing materials involved for glazing application indicated, and with a proven record of compatibility with surfaces contacted in installation.

B. Cleaners, Primers and Sealers: Type recommended by sealant or gasket manufacturer.

C. Setting Blocks: Elastomeric material with Shore A durometer hardness of 85 plus or minus 5.

D. Spacers: Elastomeric blocks or continuous extrusions with a Shore A durometer hardness

required by glass manufacturer to maintain glass lites in place for installation indicated.

E. Edge Blocks: Elastomeric material of hardness needed to limit glass lateral movement (side-walking).

2.8 FABRICATION OF GLASS AND OTHER GLAZING PRODUCTS: Fabricate glass and other glazing products in sizes required to glaze openings indicated for Project, with edge and face clearances, edge and surface conditions, and bite complying with recommendations of product manufacturer and referenced glazing standard as required to comply with system performance requirements.

PART 3 - EXECUTION

3.1 STANDARDS AND PERFORMANCE: Watertight and airtight installation of each glass product is required, except as otherwise shown. Each installation must withstand normal temperature changes, wind loading, impact loading (for operating sash & doors), without failure including loss of breakage of glass, failure of sealants or gaskets to remain watertight and airtight, deterioration of glazing materials and other defects in the work.

3.2 EXAMINATION

A. Examine glass framing, with glazier present, for compliance with the following:
1. Manufacturing and installation tolerances, including those for size, squareness, offsets at corners.
2. Presence and functioning of weep system.
3. Minimum required face or edge clearances.
4. Effective sealing between joints of glass-framing members.

B. Do not proceed with glazing until unsatisfactory conditions have been corrected.

3.3 PREPARATION: Clean glazing channels and other framing members receiving glass immediately before glazing. Remove coatings that are not firmly bonded to substrates.

3.4 GLAZING, GENERAL

A. Comply with combined recommendations of manufacturers of glass, sealants, gaskets, and other glazing materials, except where more stringent requirements are indicated, including those in referenced glazing publications.

B. Protect glass from edge damage during handling and installation.
1. Remove damaged glass from Project site and legally dispose of off site. Damaged glass is glass with edge damage or other imperfections that, when installed, weaken glass and impair performance and appearance.

A. Install elastomeric setting blocks in sill rabbets, sized and located to comply with referenced glazing standard, unless otherwise required by glass manufacturer. Set blocks in thin course of compatible sealant suitable for heel bead.

B. Do not exceed edge pressures stipulated by glass manufacturers for installing glass lites.

C. Provide spacers for glass sizes larger than 50 united inches (length plus height).

1. Locate spacers inside, outside, and directly opposite each other. Install correct size and

spacing to preserve required face clearances, except where gaskets and glazing tapes are used that have demonstrated ability to maintain required face clearances and comply with system performance requirements.

2. Provide 1/8-inch min bite of spacers on glass and use thickness equal to sealant width. With glazing tape, use thickness slightly less than final compressed thickness of tape.

D. Provide edge blocking to comply with requirements of referenced glazing publications, unless otherwise required by glass manufacturer.

E. Set glass lites in each series with uniform pattern, draw, bow, and similar characteristics.

3.4 GASKET GLAZING (DRY)

A. Fabricate compression gaskets in lengths recommended by gasket manufacturer to fit openings exactly, with stretch allowance during installation.

B. Secure compression gaskets in place with joints located at corners to compress gaskets producing a weathertight seal without developing bending stresses in glass. Seal gasket joints with sealant recommended by gasket manufacturer.

C. Install gaskets so they protrude past face of glazing stops.

D. Miter cut and bond together at corners where gaskets are used for channel glazing, so that gaskets will not pull away from corners and result in voids or leaks in glazing system.

3.5 SEALANT GLAZING (WET)

A. Install continuous spacers between glass lites and glazing stops to maintain glass face clearances and to prevent sealant from extruding into glass channel weep systems until sealants cure. Secure spacers in place and in position to control depth of installed sealant relative to edge clearance for optimum sealant performance.

B. Force sealants into glazing channels to eliminate voids and to ensure complete wetting or bond of sealant to glass and channel surfaces.

C. Tool exposed surfaces of sealants to provide a substantial wash away from glass. Install pressurized gaskets to protrude slightly out of channel to eliminate dirt and moisture pockets.

3.6 PROTECTION AND CLEANING

A. Clean and trim excess glazing materials from glass and stops or frames promptly after installation and eliminate stains and discolorations.

B. Remove and replace glass that is broken, chipped, cracked, abraded, or damaged in any way, including natural causes, accidents and vandalism, during construction period.

C. Wash glass on both faces in each area of Project **not more than 4 days prior** to date scheduled for inspections that establish date of Substantial Completion. Wash glass as recommended by glass manufacturer.

END OF SECTION 08 80 00

SECTION 09 22 16 - NON-STRUCTURAL METAL FRAMING

PART 1 - GENERAL

1.1 RELATED DOCUMENTS

A. Drawings and general provisions of the Contract, including General and Supplementary Conditions and Division 01 Specification Sections, apply to this Section.

1.2 SUMMARY

A. This Section includes non-load-bearing steel framing members for the following applications:

1. Interior framing systems (e.g., supports for partition walls, framed soffits, furring, etc.).
2. Interior suspension systems (e.g., supports for ceilings, suspended soffits, etc.).

B. Related Sections include the following:

1. Division 07 Section "Thermal Insulation" for sound batt insulation.
2. Division 09 Section "Gypsum Board" for gypsum board applied to steel framing.

1.3 SUBMITTALS

A. Product Data: For each type of product indicated.

1.4 QUALITY ASSURANCE

A. Fire-Test-Response Characteristics: For fire-resistance-rated assemblies that incorporate non-load-bearing steel framing, provide materials and construction identical to those tested in assembly indicated according to ASTM E 119 by an independent testing agency.

PART 2 - PRODUCTS

2.1 NON-LOAD-BEARING STEEL FRAMING, GENERAL

A. Recycled Content of Steel Products: Provide products with average recycled content of steel products such that postconsumer recycled content plus one-half of pre-consumer recycled content is not less than 25 percent.

B. Framing Members, General: Comply with ASTM C 754 for conditions indicated.

1. Steel Sheet Components: Comply with ASTM C 645 requirements for metal, unless otherwise indicated.
2. Protective Coating: Coating with equivalent corrosion resistance of ASTM A 653/A 653M, G40, (hot-dip galvanized) minimum, or shall have a protective coating with an equivalent corrosion resistance.

2.2 SUSPENSION SYSTEM COMPONENTS

A. Tie Wire: ASTM A 641/A 641M, Class 1 zinc coating, soft temper, 0.0625-inch- (1.59-mm-) diameter wire, or double strand of 0.0475-inch- (1.21-mm-) diameter wire.

B. Wire Hangers: ASTM A 641/A 641M, Class 1 zinc coating, soft temper, 0.162-inch (4.12-mm) diameter.

C. Carrying Channels: Cold-rolled, commercial-steel sheet with a base-metal thickness of 0.0538 inch (1.37 mm) and minimum 1/2-inch- (12.7-mm-) wide flanges.

1. Depth: 1-1/2 inches (38 mm).

D. Furring Channels (Furring Members):

1. Hat-Shaped, Rigid Furring Channels: ASTM C 645, 7/8 inch (22.2 mm) deep.

a. Minimum Base Metal Thickness: 0.0179 inch (0.45 mm).

E. Grid Suspension System for Ceilings: ASTM C 645, direct-hung system composed of main beams and cross-furring members that interlock.

1. Available Products: Subject to compliance with requirements, products that may be incorporated into the Work include, but are not limited to, the following:

a. Armstrong World Industries, Inc.; Drywall Grid Systems.
b. Chicago Metallic Corporation; 640-C Drywall Furring System.
c. USG Corporation; Drywall Suspension System.
d. Approved equals**.**

2.3 STEEL FRAMING FOR FRAMED ASSEMBLIES

A. Steel Studs and Runners: ASTM C 645.

1. Minimum Base-Metal Thickness: 0.0312 inch (0.79 mm).
a. At door jambs and where indicated provide 0.0312 (0-79 mm).
b. Provide studs with thickness/gauge as required for height/span according to Manufacturer's design tables for height/span indicated on drawings.
2. Depth: As indicated on Drawings.

B. Slip-Type Head Joints: Where indicated, provide one of the following:

1. Single Long-Leg Runner System: ASTM C 645 top runner with 2-inch- (50.8-mm-) deep flanges in thickness not less than indicated for studs, installed with studs friction fit into top runner and with continuous bridging located within 12 inches (305 mm) of the top of studs to provide lateral bracing.
2. Deflection Track: Steel sheet top runner manufactured to prevent cracking of finishes applied to interior partition framing resulting from deflection of structure above; in thickness not less than indicated for studs and in width to accommodate depth of studs.

C. Flat Strap and Backing Plate: Steel sheet for blocking and bracing in length and width indicated.

1. Minimum Base-Metal Thickness: 0.0312 inch (0.79 mm).

D. Cold-Rolled Channel Bridging: 0.0538-inch (1.37-mm) bare-steel thickness, with minimum 1/2-inch- (12.7-mm-) wide flanges.
1. Depth: 1-1/2 inches (38.1 mm).
2. Clip Angle: Not less than 1-1/2 by 1-1/2 inches (38.1 by 38.1 mm), 0.068-inch- (1.73-mm-) thick, galvanized steel.

E. Hat-Shaped, Rigid Furring Channels: ASTM C 645.

1. Minimum Base Metal Thickness: 0.0179 inch (0.45 mm).
2. Depth: 7/8 inch (22.2 mm).

PART 3 - EXECUTION

3.1 EXAMINATION

A. Examine areas and substrates, with Installer present, and including welded hollow-metal frames, cast-in anchors, and structural framing, for compliance with requirements and other conditions affecting performance.

1. Proceed with installation only after unsatisfactory conditions have been corrected.

3.2 PREPARATION

A. Suspended Assemblies: Coordinate installation of suspension systems with installation of overhead structure to ensure that inserts and other provisions for anchorages to building structure have been installed to receive hangers at spacing required to support the Work and that hangers will develop their full strength.

3.3 INSTALLATION, GENERAL

A. Installation Standard: ASTM C 754, except comply with framing sizes and spacing indicated.
1. Gypsum Board Assemblies: Also comply with requirements in ASTM C 840 that apply to framing installation.

B. Install supplementary framing, and blocking to support fixtures, equipment services, heavy trim, grab bars, toilet accessories, furnishings, or similar construction.

C. Install bracing at terminations in assemblies.

D. Do not bridge building control and expansion joints with non-load-bearing steel framing members. Frame both sides of joints independently.

3.4 INSTALLING SUSPENSION SYSTEMS

A. Install suspension system components in sizes and spacings indicated on Drawings, but not less than those required by referenced installation standards for assembly types and other assembly components indicated.

B. Isolate suspension systems from building structure where they abut or are penetrated by building structure to prevent transfer of loading imposed by structural movement.

C. Suspend hangers from building structure as follows:

1. Install hangers plumb and free from contact with insulation or other objects within ceiling plenum that are not part of supporting structural or suspension system.
   a. Splay hangers only where required to miss obstructions and offset resulting horizontal forces by bracing, countersplaying, or other equally effective means.

2. Where width of ducts and other construction within ceiling plenum produces hanger spacings that interfere with locations of hangers required to support standard suspension system members, install supplemental suspension members and hangers in the form of trapezes or equivalent devices.
   a. Size supplemental suspension members and hangers to support ceiling loads within performance limits established by referenced installation standards.

3. Wire Hangers: Secure by looping and wire tying, either directly to structures or to inserts, eye screws, or other devices and fasteners that are secure and appropriate for substrate, and in a manner that will not cause hangers to deteriorate or otherwise fail.
4. Do not attach hangers to steel roof deck.
5. Do not connect or suspend steel framing from ducts, pipes, or conduit.

D. Seismic Bracing: Sway-brace suspension systems with hangers used for support.

E. Grid Suspension Systems: Attach perimeter wall track or angle where grid suspension systems meet vertical surfaces. Mechanically join main beam and cross-furring members to each other and butt-cut to fit into wall track.

3.5 INSTALLING FRAMED ASSEMBLIES

A. Install studs so flanges within framing system point in same direction.

1. Space studs as follows:
   a. Single-Layer Application: 16 inches (406 mm) o.c., unless otherwise indicated.
   b. Multilayer Application: 16 inches (406 mm) o.c., unless otherwise indicated.

B. Install tracks (runners) at floors and overhead supports. Extend framing full height to structural supports or substrates above suspended ceilings, except where partitions are indicated to terminate at suspended ceilings. Continue framing around ducts penetrating partitions above ceiling.

1. Slip-Type Head Joints: Where framing extends to overhead structural supports, install to produce joints at tops of framing systems that prevent axial loading of finished assemblies.
2. Door Openings: Screw vertical studs at jambs to jamb anchor clips on door frames; install runner track section (for cripple studs) at head and secure to jamb studs.
   a. Install two studs 20 GA. (0.0312 inch) at each jamb, unless otherwise indicated.
   b. Install cripple studs at head adjacent to each jamb stud, with a minimum 1/2-inch (12.7-mm) clearance from jamb stud to allow for installation of control joint in finished assembly.
   c. Extend jamb studs to underside of overhead structure.
3. Other Framed Openings: Frame openings other than door openings the same as required for door openings, unless otherwise indicated. Install framing below sills of openings to match framing required above door heads.

C. Installation Tolerance: Install each framing member so fastening surfaces vary not more than 1/8 inch (3 mm) from the plane formed by faces of adjacent framing.

END OF SECTION 09 22 16

SECTION 09 29 00 - GYPSUM BOARD

PART 1 - GENERAL

1.1 RELATED DOCUMENTS

A. Drawings and general provisions of the Contract, including General and Supplementary Conditions and Division 01 Specification Sections, apply to this Section.

1.2 SUMMARY

A. This Section includes the following:

1. Interior gypsum board, including Level 4 Finish unless otherwise noted.
2. Interior gypsum board glass mat water resistant Tile Backer board as a wall tile substrate

B. Related Sections include the following:

1. Division 07 Section "Thermal Insulation" for insulation and vapor retarders installed in assemblies that incorporate gypsum board.
2. Division 09 Section “Tiling”
3. Division 09 painting Sections for primers applied to gypsum board surfaces.

1.3 SUBMITTALS

A. Product Data: For each type of product indicated.

B. Samples: For the following products:
1. Textured Finishes: Fine to medium for each textured finish indicated and on same backing indicated for Work.

1.4 QUALITY ASSURANCE

A. Fire-Resistance-Rated Assemblies: For fire-resistance-rated assemblies, provide materials and construction identical to those tested in assembly indicated according to ASTM E 119 by an independent testing agency.

1.5 STORAGE AND HANDLING

A. Store materials inside under cover and keep them dry and protected against damage from weather, condensation, direct sunlight, construction traffic, and other causes. Stack panels flat to prevent sagging.

1.6 PROJECT CONDITIONS

A. Environmental Limitations: Comply with ASTM C 840 requirements or gypsum board manufacturer's written recommendations, whichever are more stringent.

B. Do not install interior products until installation areas are enclosed and conditioned.

C. Do not install panels that are wet, those that are moisture damaged, and those that are mold damaged.

1. Indications that panels are wet or moisture damaged include, but are not limited to, discoloration, sagging, or irregular shape.
2. Indications that panels are mold damaged include, but are not limited to, fuzzy or splotchy surface contamination and discoloration.

PART 2 - PRODUCTS

2.1 PANELS, GENERAL

A. Size: Provide in maximum lengths and widths available that will minimize joints in each area and that correspond with support system indicated.

2.2 INTERIOR GYPSUM BOARD

A. General: Complying with ASTM C 36/C 36M or ASTM C 1396/C 1396M, as applicable to type of gypsum board indicated and whichever is more stringent.

1. Manufacturers: Subject to compliance with requirements, provide products by one of the following:
   a. American Gypsum Co.
   b. G-P Gypsum.
   c. National Gypsum Company.
   d. USG Corporation.
   e. Approved equals

B. Type X:
1. Water resistant where indicated on drawings and/or schedules.
2. Thickness: 5/8 inch, ½ inch at ceilings is permitted
3. Long Edges: Tapered.

C. Glass-Mat, Water-Resistant Tile Backing Board: ASTM C 1178/C 1178M, with manufacturer's standard edges.

1. Products: Subject to compliance with requirements, available products that may be incorporated into the Work include, but are not limited to, the following:
   a. CertainTeed Corp.; GlasRoc Tile Backer.
   b. Georgia-Pacific Gypsum LLC; DensShield Tile Backer.
   c. Approved equals.
2. Core: 5/8 inch (15.9 mm), Type X.
3. Mold Resistance: ASTM D 3273, score of 10 as rated according to ASTM D 3274.

2.3 TRIM ACCESSORIES

A. Interior Trim: ASTM C 1047.

1. Material: Galvanized or aluminum-coated steel sheet or rolled zinc.
2. Shapes:
   a. Cornerbead.
   b. LC-Bead: J-shaped; exposed long flange receives joint compound.
   c. L-Bead: L-shaped; exposed long flange receives joint compound.
   d. U-Bead: J-shaped; exposed short flange does not receive joint compound.
   e. Expansion (control) joint.

2.4 JOINT TREATMENT MATERIALS

A. General: Comply with ASTM C 475/C 475M.

B. Joint Tape:

1. Interior Gypsum Wallboard: Paper.
2. Exterior Glass-Mat Gypsum Sheathing Board: 10-by-10 glass mesh.
3. Tile Backing Panels: As recommended by panel manufacturer.

C. Joint Compound for Interior Gypsum Wallboard: For each coat use formulation that is compatible with other compounds applied on previous or for successive coats.

1. Prefilling: At open joints and damaged surface areas, use setting-type taping compound.
2. Embedding and First Coat: For embedding tape and first coat on joints, fasteners, and trim flanges, use setting-type taping compound.
3. Fill Coat: For second coat, use setting-type, sandable topping compound.
4. Finish Coat: For third coat, use setting-type, sandable topping compound.
5. Skim Coat (If applicable): For final coat of Level 5 finish, use setting-type, sandable topping compound.

2.5 AUXILIARY MATERIALS

A. General: Provide auxiliary materials that comply with referenced installation standards and manufacturer's written recommendations.

B. Laminating Adhesive: Adhesive or joint compound recommended for directly adhering gypsum panels to continuous substrate.

1. Use adhesives that have a VOC content of 50 g/L or less when calculated according to 40 CFR 59, Subpart D (EPA Method 24).

C. Steel Drill Screws: ASTM C 1002, unless otherwise indicated.

1. Use screws complying with ASTM C 954 for fastening panels to steel members from 0.033 to 0.112 inch thick.
2. For fastening cementitious backer units, use screws of type and size recommended by panel manufacturer.

D. Sound Attenuation Blankets: As specified in Division 07 Section “Thermal Insulation”

E. Acoustical Sealant: As specified in Division 07 Section "Joint Sealants."

1. Provide sealants that have a VOC content of 250 g/L or less when calculated according to 40 CFR 59, Subpart D (EPA Method 24).

F. Thermal Insulation: As specified in Division 07 Section "Thermal Insulation."

2.6 TEXTURE FINISHES

A. Primer: As recommended by textured finish manufacturer.

B. Aggregate Finish: Water-based, job-mixed, aggregated, drying-type texture finish for spray application.

1. Products: Subject to compliance with requirements, provide one of the following:

a. G-P Gypsum; Georgia-Pacific Ceiling Textures/Vermiculite.
b. USG Corporation; SHEETROCK Wall and Ceiling Spray Texture (Aggregated).
c. Approved equals.

2. Texture: Light to medium spatter. Submit sample(s) for approval.

PART 3 - EXECUTION

3.1 EXAMINATION

A. Examine areas and substrates, with Installer present, and including welded hollow-metal frames and framing, for compliance with requirements and other conditions affecting performance.

B. Examine panels before installation. Reject panels that are wet, moisture damaged, and mold damaged.

C. Proceed with installation only after unsatisfactory conditions have been corrected.

3.2 APPLYING AND FINISHING PANELS, GENERAL

A. Comply with ASTM C 840.

B. Install ceiling panels across framing to minimize the number of abutting end joints and to avoid abutting end joints in central area of each ceiling. Stagger abutting end joints of adjacent panels not less than one framing member.

C. Install panels with face side out. Butt panels together for a light contact at edges and ends with not more than 1/16 inch of open space between panels. Do not force into place.

D. Locate edge and end joints over supports, except in ceiling applications where intermediate supports or gypsum board back-blocking is provided behind end joints. Do not place tapered edges against cut edges or ends. Stagger vertical joints on opposite sides of partitions. Do not make joints other than control joints at corners of framed openings.

E. Form control and expansion joints with space between edges of adjoining gypsum panels.

F. Cover both faces of support framing with gypsum panels in concealed spaces (above ceilings, etc.), except in chases braced internally.

1. Unless concealed application is indicated or required for sound, fire, air, or smoke ratings, coverage may be accomplished with scraps of not less than 8 sq. ft. in area.
2. Fit gypsum panels around ducts, pipes, and conduits.
3. Where partitions intersect structural members projecting below underside of floor/roof slabs and decks, cut gypsum panels to fit profile formed by structural members; allow 1/4- to 3/8-inch wide joints to install sealant.

G. Isolate perimeter of gypsum board applied to non-load-bearing partitions at structural abutments, except floors. Provide 1/4- to 1/2-inch wide spaces at these locations, and trim edges with edge trim where edges of panels are exposed. Seal joints between edges and abutting structural surfaces with acoustical sealant.

H. Attachment to Steel Framing: Attach panels so leading edge or end of each panel is attached to open (unsupported) edges of stud flanges first.

3.3 APPLYING INTERIOR GYPSUM BOARD

A. Install interior gypsum board in the following locations:

1. Type X: As indicated on Drawings.

B. Single-Layer Application:

1. On ceilings, apply gypsum panels before wall/partition board application to greatest extent possible and at right angles to framing, unless otherwise indicated.

2. On partitions/walls, apply gypsum panels horizontally perpendicular to framing, unless otherwise indicated or required by fire-resistance-rated assembly, and minimize end joints.
   a. Stagger abutting end joints not less than one framing member in alternate courses of panels.
3. Fastening Methods: Apply gypsum panels to supports with steel drill screws.

3.4 INSTALLING TRIM ACCESSORIES

A. General: For trim with back flanges intended for fasteners, attach to framing with same fasteners used for panels. Otherwise, attach trim according to manufacturer's written instructions.

B. Control Joints: Install control joints according to ASTM C 840 and in specific locations approved by Architect for visual effect.

1. 30 foot maximum spacing.
2. Locate at door jambs unless otherwise indicated. Provide a joint at each jamb.

C. Interior Trim: Install in the following locations:

1. Cornerbead: Use at outside corners**,** unless otherwise indicated.
2. LC-Bead: Use at exposed panel edges.
3. L-Bead: Use where indicated.
4. U-Bead: Use at exposed panel edges.

3.5 FINISHING GYPSUM BOARD

A. General: Treat gypsum board joints, interior angles, edge trim, control joints, penetrations, fastener heads, surface defects, and elsewhere as required to prepare gypsum board surfaces for decoration. Promptly remove residual joint compound from adjacent surfaces.

B. Prefill open joints and damaged surface areas.

C. Apply joint tape over gypsum board joints, except those with trim having flanges not intended for tape.

D. Gypsum Board Finish Levels: Finish panels to levels indicated below and according to ASTM C 840:

1. Level 1: Ceiling plenum areas, concealed areas, and where indicated.
2. Level 2: Panels that are substrate for tile.
3. Level 3: Where indicated on Drawings.
4. **Level 4:** At panel surfaces that will be exposed to view, **unless otherwise indicated**.
5. Level 5: Panels that are a substrate for applied finishes and where indicated on Drawings

3.6 APPLYING TEXTURE FINISHES

A. Surface Preparation and Primer: Prepare and apply primer to gypsum panels and other surfaces receiving texture finishes. Apply primer to surfaces that are clean, dry, and smooth.

B. Texture Finish Application: Mix and apply finish using powered spray equipment, to produce a uniform texture free of starved spots or other evidence of thin application or of application patterns.

C. Prevent texture finishes from coming into contact with surfaces not indicated to receive texture finish by covering them with masking agents, polyethylene film, or other means. If, despite these precautions, texture finishes contact these surfaces, immediately remove droppings and overspray to prevent damage according to texture-finish manufacturer's written recommendations.

3.7 PROTECTION

A. Protect installed products from damage from weather, condensation, direct sunlight, construction, and other causes during remainder of the construction period.

B. Remove and replace panels that are wet, moisture damaged, and mold damaged.

END OF SECTION 09 29 00

SECTION 09 30 00 - TILING

PART 1 - GENERAL

1.1 RELATED DOCUMENTS: Drawings and general provisions of the Contract, including General and Supplementary Conditions and Division 1 Specification Sections, apply to this Section.

1.2 SUMMARY

A. This Section includes the following:

1. Colorbody Porcelain Rectified Tile and Honed for floors and walls.
2. Metal edge strips installed as part of tile installations.
3. Setting Bed materials (Thick Set) for slope to drain at Locker Room floors

B. Related Sections include the following:
1. Division 03: Section " Cast in Place Concrete"
2. Division 09: Section, "Gypsum Board"

1.3 DEFINITIONS

A. Module Size: Actual tile size (minor facial dimension as measured per ASTM C 499) plus joint width indicated.

B. Facial Dimension: Nominal tile size as defined in ANSI A137.1.

1.4 PERFORMANCE REQUIREMENTS

A. Static Coefficient of Friction: For tile installed on walking surfaces, provide products.

1. Level Surfaces: Minimum ≥0.65 (wet).

1.5 SUBMITTALS

A. Product Data: For each type of tile, water proofing, mortar, grout, and other products specified.

B. Tile Samples for Initial Selection: Manufacturer's color charts consisting of actual tiles or sections of tiles showing the full range of colors, textures, and patterns available for each type and composition of tile indicated. Include Samples of accessories involving color selection.

C. Grout Samples for Initial Selection: Manufacturer's color charts consisting of actual sections of grout showing the full range of colors available for each type of grout indicated.

D. Metal edge strips in 3-inch lengths

E. Marble threshold strips in 3-inch lengths

1.6 QUALITY ASSURANCE

A. Installer Qualifications: Engage an experienced installer who has completed tile installations similar in material, design, and extent to that indicated for this Project and with a record of

successful in-service performance.

1. In acceptance or rejection of installed ceramic tile, no allowance will be made for lack of skill on part of tile setters.

B. Codes and Standards: In addition to complying with all the pertinent codes and regulations, the following apply:

1. Manufacture all ceramic tile in accordance with provisions of TCNA 137.1.
2. Install all ceramic tile in accordance with recommendations contained in current edition of the Handbook for Ceramic Tile Installation of Tile Council of North America, Inc., and per the latest edition of the following:
   a. ANSI A108.1A: Installation of Portland Cement Mortar Bed.
   b. ANSI A118.3: Installation of Epoxy Grout in Tilework.
   c. ANSI A118.3: Specifications for Epoxy Mortar.
   d. ANSI A118.6: Specifications for Ceramic Tile Grouts.
   e. ANSI A136.1: Specifications for Organic Adhesives for installation of Ceramic Tile.
   f. ANSI A137.1: Specifications for Ceramic Tile.

3. TCNA Handbook Assembly Number: Floors; F132-12 Bonded Mortar Bed, Epoxy Mortar & Epoxy Grout. Walls; W242-12 Organic Adhesive Bond Coat, Epoxy Grout.

C. Source Limitations for Tile: Obtain each color, grade, finish, type, composition, and variety of tile from one source with resources to provide products from the same production run for each contiguous area of consistent quality in appearance and physical properties without delaying the Work.

D. Source Limitations for Setting and Grouting Materials: Obtain ingredients of a uniform quality for each mortar, adhesive, and grout component from a single manufacturer and each aggregate from one source or producer.

1.7 DELIVERY, STORAGE, AND HANDLING

A. Deliver and store packaged materials in original containers with seals unbroken and labels intact until time of use. Comply with requirement of ANSI A137.1 for labeling sealed tile packages.

B. Prevent damage or contamination to tile and cementitious materials by water, freezing, foreign matter, and other causes.

1.8 PROJECT CONDITIONS

A. Environmental Limitations: Do not install tile until construction in spaces is completed and ambient temperature and humidity conditions are being maintained to comply with referenced standards and manufacturer's written instructions.

1.9 EXTRA MATERIALS

A. Deliver extra materials to Owner. Furnish extra materials described below that match products installed, are packaged with protective covering for storage, and are identified with labels describing contents.

1. Tile and Trim Units: Furnish quantity of full-size units equal to 3 percent of amount installed, for each type, composition, color, pattern, and size indicated.

PART 2 - PRODUCTS

2.1 MANUFACTURERS

A. Manufacturers: Subject to compliance with requirements, provide products by one of the following or approved equals:

1. Tile Products:
   a. Daltile Haut Monde
   b. Approved equals

2. Tile-Setting, Waterproofing, Caulking, and Grouting Materials:
   a. Laticrete – Basis of Design
   b. Approved equals

2.2 PRODUCTS, GENERAL

A. Factory Blending: For tile exhibiting color variations within the ranges selected during Sample submittals, blend tile in the factory and package so tile units taken from one package show the same range in colors as those taken from other packages and match approved Samples.

2.3 TILE PRODUCTS

A. Colorbody Porcelain: Provide tile complying with the following requirements:
   1. Composition: Rectified Colorbody Porcelain.
   2. Module Size: 12” x 24”
   3. Nominal Thickness: 3/8 inch
   4. Face: Honed
   5. Colors and finishes may be chosen from the manufacturer's full-line of colors in percentages as follows:
      a. Daltile Haut Monde:
         1) See drawings for layouts and patterns.
         2) Floor Tile: As selected by Architect from full range of available colors
         3) Wall Tile: As selected by Architect from full range of available colors.

2.4 SKIM COAT & SETTING MATERIALS

a. Substrate Sealer: Laticrete Hydro Ban
b. Approved Equal

B. Mortar Bond Coat: Laticrete 254 Platinum Slurry Bond Coat or Approved Equal

C. Mortar Setting Bed: Laticrete 3701 Fortified Mortar Bed

2.5 GROUTING MATERIALS

A. Epoxy Grout: ANSI A118.3 composed of white or gray cement and white or colored aggregate as required producing color indicated.

   1. Sanded grout mixture for joints 1/8 inch and wider

a. Laticrete SpectraLOCK PRO Grout or Approved Equal

B. Floor Tile Adhesive

1. Laticrete Latapoxy 300 Adhesive or Approved Equal

2.6 MISCELLANEOUS MATERIALS

A. Caulk all required joints according to TCNA
1. Laticrete Latasil

C. Trowelable Underlayments and Patching Compounds: Latex-modified, portland-cement-based formulation provided or approved by manufacturer of tile-setting materials for installations indicated.

D. Grout Sealer: Provide grout sealer for floor grout as manufactured and compatible with grout products use.

PART 3 - EXECUTION

3.1 EXAMINATION

A. Examine substrates, areas, and conditions where tile will be installed, with Installer present, for compliance with requirements for installation tolerances and other conditions affecting performance of installed tile.

1. Verify that substrates for setting tile are firm; dry; clean; free from oil, waxy films, and curing compounds; and within flatness tolerances required by referenced ANSI A108 series of tile installation standards for installations indicated.
2. Verify that installation of grounds, anchors, recessed frames, electrical and mechanical units of work, and similar items located in or behind tile has been completed before installing tile.
3. Verify that joints and cracks in tile substrates are coordinated with tile joint locations; if not coordinated, adjust latter in consultation with Architect.

A. Do not proceed with installation until unsatisfactory conditions have been corrected. Proceeding with installation indicates acceptance of substrate.

C. Maximum variation in surfaces to receive tile shall be as follows:

1. Prior to installing floor tile, ensure surfaces are level, with maximum surface variation of 1/8" in 10'.

3.2 PREPARATION

A. Insure the cement underlayment has been sealed according to the requirements of the cement underlayment manufacture prior to installing the water proof membrane.

B. Remove coatings, including curing compounds, and other substances that contain soap, wax, oil, or silicone and are incompatible with tile-setting materials by using a drum sander, or a polishing machine equipped with a heavy-duty wire brush.

C. Provide concrete substrates for tile floors installed with dry-set or latex-portland cement mortars that comply with flatness tolerances specified in referenced ANSI A108 series of tile installation standards for installations indicated.

D. Use trowelable leveling and patching compounds per tile-setting material manufacturer's written instructions to fill cracks, holes, and depressions.

E. Remove protrusions, bumps, and ridges by sanding or grinding.

F. Blending: For tile exhibiting color variations within the ranges selected during Sample submittals, verify that tile has been blended in the factory and packaged so tile units taken from one package show the same range in colors as those taken from other packages and match approved Samples. If not factory blended, either return to manufacturer or blend tiles at Project site before installing.

3.3 FIELD QUALITY CONTROL: Tile setting materials shall not be applied to surfaces that contain frost. Tile shall not be installed in areas where the temperature is not maintained above 50 degrees F or where the temperature of the backing is above 100 degrees F.

3.4 INSTALLATION, GENERAL

A. TCNA Installation Guidelines: TCNA's "Handbook for Ceramic Tile Installation." Comply with TCNA installation methods indicated in ceramic tile installation schedules.

B. Extend tile work into recesses and under or behind equipment and fixtures to form a complete covering without interruptions, unless otherwise indicated. Terminate work neatly at obstructions, edges, and corners without disrupting pattern or joint alignments.

C. Accurately form intersections and returns. Perform cutting and drilling of tile without marring visible surfaces. Carefully grind cut edges of tile abutting trim, finish, or built-in items for straight aligned joints. Fit tile closely to electrical outlets, piping, fixtures, and other penetrations so plates, collars, or covers overlap tile.

D. Jointing Pattern: Lay tile in grid pattern, unless otherwise indicated. Align joints when adjoining tiles on floor, base, walls, and trim are the same size. Lay out tile work and center tile fields in both directions in each space or on each wall area. Adjust to minimize tile cutting. Provide uniform joint widths, unless otherwise indicated.

1. For tile mounted in sheets, make joints between tile sheets the same width as joints within tile sheets so joints between sheets are not apparent in finished work.

F. Center and balance areas of tile, if possible.

1. An excessive amount of cuts shall not be made. Usually, no cuts smaller than half size shall be made. Make all cuts on the outer edges of the field.
2. Smooth cut edges. Install tile without jagged or flaked edges.
3. Fit tile closely where edges will be covered by trim, escutcheons or other similar devices.
4. Lay all ceramic and impervious porcelain tile according to the patterns specified by the Architect.

G. Make corners of all tile flush and level with corners of adjacent tile, with due allowance to tolerances for tile. Form internal wall corners square and external corners bullnosed. Keep all joint lines straight and of even width, including miters.

H. Thoroughly back-up with thin-set bonding material all thinset trim units, molded or shaped pieces and secure firmly in place.

I. Finish floor and wall areas level and plumb with no variations exceeding 1/8" in 10' from the

required plane.

1. Sound tile after setting. Remove and replace hollow sounding units.

J. Allow tile to set for a minimum of 48 hours prior to grouting.

1. Grout ceramic tiles and ceramic mosaic tiles with Latex-Portland grout in accordance with grout manufacturer's instructions and ANSI 108.10

K. Seal between tile and dissimilar building products with mildew resistant silicone sealant.

3.5 FLOOR TILE INSTALLATION

A. Joint Widths: Install tile on floors with the following joint widths:
1. Impervious Porcelain tile: 1/8 inch,
2. Colorbody Porcelain tile: 1/8 inch.

B. Metal Edge Strips: Install at locations indicated or where exposed edge of tile flooring meets carpet, VCT, or other flooring that finishes flush with top of tile.

C. Marble Thresholds: Install at transitions between tile and carpet where noted on plans.

3.6 CLEANING AND PROTECTING

A. Cleaning: On completion of placement and grouting, clean all porcelain tile surfaces so they are free of foreign matter.

1. Remove latex-portland cement grout residue from tile as soon as possible.
2. Unglazed tile may be cleaned with acid solutions only when permitted by tile and grout manufacturer's written instructions, but no sooner than 10 days after installation. Protect metal surfaces, cast iron, and vitreous plumbing fixtures from effects of acid cleaning. Flush surface with clean water before and after cleaning.

B. Provide final protection and maintain conditions, in a manner acceptable to manufacturer and Installer that ensure tile is without damage or deterioration at the time of Substantial Completion.

1. Apply grout sealer to all grout joints in accordance with manufacturer's requirements and instructions.

END OF SECTION

SECTION 09 51 13 - ACOUSTICAL PANEL CEILINGS

PART 1 - GENERAL

1.1 RELATED DOCUMENTS: Drawings and general provisions of the Contract, including General and Supplementary Conditions and Division 01 Specification Sections, apply to this Section.

1.2 SUMMARY

A. This Section includes ceilings consisting of acoustical panels and exposed suspension systems.

B. Related Sections include the following:

1. Division 07 Section, "Joint Sealants"
2. Division 09 Section, "Gypsum Board"
3. Division 22 Mechanical Equipment
5. Division 26 Electrical Equipment

1.3 SUBMITTALS

A. Product Data: For each type of product specified.

1. Manufacturer's product specification and installation instructions for each acoustical ceiling material required and for each suspension system.
2. Include manufacturer's recommendations for cleaning and refinishing acoustical units, including precautions against materials and methods which may be detrimental to finishes and acoustical performances.

B. Samples for Verification: Full-size units of each type of ceiling assembly indicated; in sets for each color, texture, and pattern specified, showing the full range of variations expected in these characteristics.

1. 12-inch-square samples of each acoustical panel type, pattern, and color.
2. Set of 12-inch-long samples of exposed suspension system members, including moldings, for each color and system type required.

1.4 QUALITY ASSURANCE

A. Installer Qualifications: Engage an experienced installer who has completed acoustical panel ceilings similar in material, design, and extent to that indicated for this Project & with a record of successful in-service performance.

B. Source Limitations for Ceiling Units and Suspension Systems: Obtain each acoustical ceiling panel and suspension system from one source with resources to provide products of consistent quality in appearance and physical properties without delaying the Work.

1.5 DELIVERY, STORAGE, AND HANDLING

A. Deliver acoustical panels and suspension system components to Project site in original, unopened packages and store them in a fully enclosed space where they will be protected against damage from moisture, direct sunlight, surface contamination, and other causes.

B. Before installing acoustical panels, permit them to reach room temperature and a stabilized

moisture content.

1.6 PROJECT CONDITIONS

A. Environmental Limitations: Do not install acoustical panel ceilings until spaces are enclosed and weatherproof, wet-work in spaces is complete and dry, work above ceilings is complete and inspected, and ambient temperature and humidity conditions are maintained at the levels indicated for Project when occupied for its intended use.

1.7 COORDINATION: Coordinate layout and installation of acoustical panels and suspension system with other construction that penetrates ceilings or is supported by them, including light fixtures, HVAC equipment, fire-suppression system, and partition assemblies.

1.8 EXTRA MATERIALS

A. Furnish extra materials described below that match products installed, are packaged with protective covering for storage, and are identified with labels describing contents.

1. Acoustical Ceiling Units: Full-size units equal to 2.0 percent of amount installed.
2. Deliver extra materials to Owner's local storage facility at the time of "Substantial Completion" of the work.

PART 2 PRODUCTS

2.1 ACOUSTICAL PANELS, GENERAL

A. Acoustical Panel Standard: Provide manufacturer's standard panels of configuration indicated that comply with ASTM E 1264 classifications as designated by types, patterns, acoustical ratings, and light reflectances, unless otherwise indicated. Provide sizes shown by reflected ceiling plans or the Room Finish Schedule.

B. Mineral Fiber Acoustical Panels:

1. ACT-1: 24" x 48" Millennia or approved equal, 3/4" thick, with angled tegular edge for standard grid. NRC .60; LR .79. Color: White.

2.2 METAL SUSPENSION SYSTEMS, GENERAL

A. Metal Suspension System Standard: Provide manufacturer's standard direct-hung metal suspension systems of types, structural classifications, and finishes indicated that comply with applicable ASTM C 635 requirements. Coordinate with other work supported by or penetrating through ceilings, including light fixtures, HVAC equipment, and partition system, if any.

B. Structural Class: Intermediate-duty system.

1. Provide heavy duty system for mains spanning 4’-0” without hanging wires.

C. Exposed Suspension System:

1. All exposed system parts shall be white.
2. Manufacturer's standard exposed runners, cross-runners and accessories, types to be Donn DX by U.S. Gypsum or approved equal, 15/16" wide, with exposed cross-runners coped to lay flush with main runners.

D. Attachment Devices: Size for five times design load indicated in ASTM C 635, Table 1, Direct Hung, unless otherwise indicated.

1. Anchors in Concrete: Anchors of type and material indicated below, with holes or loops

for attaching hangers of type indicated.

a. Postinstalled Powder-Actuated Fasteners in Concrete: Fastener system of type suitable for application indicated, fabricated from corrosion-resistant materials, with clips or other accessory devices for attaching hangers of type indicated, and with capability to sustain, without failure, a load equal to 10 times that imposed by ceiling construction.

E. Wire Hangers, Braces, and Ties: Provide wires complying with the following requirements:

1. Zinc-Coated Carbon-Steel Wire: ASTM A 641/A 641M, Class 1 zinc coating, soft temper.
2. Size: Select wire diameter so its stress at three times hanger design load (ASTM C 635, Table 1, Direct Hung) will be less than yield stress of wire, but provide not less than 0.106-inch- diameter wire.
3. Restraint wire complying with UBC Standard 47.1812 (C) p. 1154 shall be provided.

F. Sheet-Metal Edge Moldings and Trim: Type and profile indicated or, if not indicated, manufacturer's standard moldings for edges and penetrations that fit acoustical panel edge details and suspension systems indicated; formed from sheet metal of same material and finish as that used for exposed flanges of suspension system runners.

1. For lay-in panels with reveal edge details, provide stepped edge molding that forms reveal of same depth and width as that formed between edge of panel and flange at exposed suspension member.
2. For circular penetrations of ceiling, provide edge moldings fabricated to diameter required to fit penetration exactly.

2.3 ACOUSTICAL SEALANT

A. Acoustical Sealant for Exposed and Concealed Joints: Manufacturer's standard nonsag, paintable, nonstaining latex sealant complying with ASTM C 834 and the following requirements:

1. Product is effective in reducing airborne sound transmission through perimeter joints and openings in building construction as demonstrated by testing representative assemblies according to ASTM E 90.

B. Products: Subject to compliance with requirements, provide one of the following:

1. Acoustical Sealant for Exposed and Concealed Joints:
   a. PL Acoustical Sealant; Chemrex, Inc., Contech Brands.
   b. AC-20 FTR Acoustical and Insulation Sealant; Pecora Corp.
   c. SHEETROCK Acoustical Sealant; United States Gypsum Co.

PART 3- EXECUTION

3.1 EXAMINATION

A. Examine substrates and structural framing to which acoustical panel ceilings attach or abut, with Installer present, for compliance with requirements specified in this and other Sections that affect ceiling installation and anchorage, and other conditions affecting performance of acoustical panel ceilings.

1. Proceed with installation only after unsatisfactory conditions have been corrected.

3.2 PREPARATION: Measure each ceiling area and establish layout of acoustical panels to balance border widths at opposite edges of each ceiling **(or as shown on Drawings. If layout shown**

cannot be achieved, consult with Architect prior to proceeding). Avoid (if possible) using less-than-half-width panels at borders, and comply with layout shown on reflected ceiling plans.

3.3 INSTALLATION

A. General: Install acoustical panel ceilings to comply with publications referenced below per manufacturer's written instructions and CISCA's "Ceiling Systems Handbook." Comply with governing regulations, fire resistance rating requirements as indicated, and industry standards applicable to the work.
   1. Standard for Ceiling Suspension System Installations: Comply with ASTM C 636.
   2. U.B.C.'s "Metal Suspension Systems for Acoustical Tile and for Lay-in Panel Ceilings": U.B.C. Standard 25-2, 1997 Edition (especially for lateral bracing requirements).
      a. See bracing drawing. UBC cited as reference only. Comply with IBC requirements.

B. Suspend ceiling hangers from building's structural members and as follows:
   1. Install hangers plumb and free from contact with insulation or other objects within ceiling plenum that are not part of supporting structure or of ceiling suspension system.
   2. Splay hangers only where required to miss obstructions; offset resulting horizontal forces by bracing, countersplaying, or other equally effective means.
   3. Where width of ducts and other construction within ceiling plenum produces hanger spacings that interfere with location of hangers at spacings required to support standard suspension system members, install supplemental suspension members and hangers in form of trapezes or equivalent devices. Size supplemental suspension members and hangers to support ceiling loads within performance limits established by referenced standards and publications.
   4. Secure wire hangers to ceiling suspension members and to supports above with a minimum of three tight turns. Connect hangers directly either to structures or to inserts, eye screws, or other devices that are secure; that are appropriate for substrate; and that will not deteriorate or otherwise fail due to age, corrosion, or elevated temperatures.
   5. Do not support ceilings directly from permanent metal forms or floor deck. Fasten hangers to cast-in-place hanger inserts, powder-actuated fasteners, or drilled-in anchors that extend through forms into concrete.
   6. Do not attach hangers to steel deck tabs.
   7. Do not attach hangers to steel roof deck. Attach hangers to structural members.
   8. Space hangers not more than 48 inches o.c. along each member supported directly from hangers, unless otherwise indicated; and provide hangers not more than 8 inches from ends of each member.

C. Secure bracing wires to ceiling suspension members and to supports with a minimum of four tight turns. Suspend bracing from building's structural members as required for hangers, without attaching to permanent metal forms, steel deck, or steel deck tabs. Fasten bracing wires into concrete with cast-in-place or postinstalled anchors.

D. Install edge moldings and trim of type indicated at perimeter of acoustical ceiling area and where necessary to conceal edges of acoustical panels.
   1. Apply acoustical sealant in a continuous ribbon concealed on back of vertical legs of moldings before they are installed.
   2. Screw attach moldings to substrate at intervals not more than 16 inches o.c. and not more than 3 inches from ends, leveling with ceiling suspension system to a tolerance of 1/8 inch in 12 feet. Miter corners accurately and connect securely.
   3. Do not use exposed fasteners, including pop rivets, on moldings and trim.

E. Install suspension system runners so they are square and securely interlocked with one another.

Remove and replace dented, bent, or kinked members.

F. Install acoustical panels with undamaged edges and fitted accurately into suspension system runners and edge moldings. Scribe and cut panels at borders and penetrations to provide a neat, precise fit.

1. Arrange directionally patterned acoustical panels as follows:
   a. Install panels with pattern running in one direction.

2. For square-edged panels, install panels with edges fully hidden from view by flanges of suspension system runners and moldings.

3. For reveal-edged panels on suspension system runners, install panels with bottom of reveal in firm contact with top surface of runner flanges.

4. Paint cut panel edges remaining exposed after installation; match color of exposed panel surfaces using coating recommended by acoustical panel manufacturer.

5. Install hold-down clips in areas indicated, in areas required by authorities having jurisdiction, and for fire-resistance ratings; space as recommended by panel manufacturer's written instructions, unless otherwise indicated or required.

6. Protect lighting fixtures and air ducts to comply with requirements indicated for fire-resistance-rated assembly.

3.4 FIELD QUALITY CONTROL: Level suspension system to tolerances of 1/8" in 12'-0".

3.5 CLEANING

A. Clean exposed surfaces of acoustical panel ceilings, including trim, edge moldings, and suspension system members. Comply with manufacturer's written instructions for cleaning and touchup of minor finish damage. Remove and replace ceiling components that cannot be successfully cleaned and repaired to permanently eliminate evidence of damage.

END OF SECTION 09 51 13

SECTION 09 65 13 - RESILIENT BASE AND ACCESSORIES

PART 1 - GENERAL

1.1 RELATED DOCUMENTS:

A. Drawings and general provisions of the Contract, including General and Supplementary Conditions and Division 01 Specification Sections, apply to this Section.

1.2 SUMMARY

A. This Section includes the following:
   1. Resilient wall base
   2. Resilient flooring accessories

B. Related Sections: The following Sections contain requirements that relate to this Section:
   1. Division 03 Section "Cast-in-Place Concrete"
   2. Division 09 Section “Resilient Tile’

1.3 SUBMITTALS

A. General: Submit the following in accordance with Conditions of Contract and Division 01 Specification Sections.

B. Product data for each type of product specified. Certification by manufacturer that products supplied for installation including adhesives, comply with local regulations controlling use of volatile organic compounds. (VOC's)

C. Samples for initial selection purposes of manufacturer's standard sample sets in form of pieces cut from each type of product specified showing full range of colors and patterns available.

1.4 QUALITY ASSURANCE

A. Installer Qualifications: A qualified installer who employs workers for this Project who are competent in techniques required by manufacturer for rubber floor tile and accessory installation indicated.
   1. Engage an experienced installer who employs workers with experience applying flooring systems similar in material, design, and extent to those indicated for this project, whose work has resulted in applications with record of successful in-service performance, and who is acceptable to flooring manufacturer.

B. Single-Source Responsibility for Products: Obtain each type and color of product specified from a single source with resources to provide products of consistent quality in appearance and physical properties without delaying progress of the Work.

C. Fire Performance Characteristics: Provide products with the following fire performance characteristics as determined by testing products per ASTM test method indicated below by UL or another testing and inspecting agency acceptable to authorities having jurisdiction.

1. Critical Radiant Flux: 0.45 watts per sq. cm or more per ASTM E 648.
2. Smoke Density: Less than 450 per ASTM E 48.

1.5 DELIVERY, STORAGE, AND HANDLING

A. Deliver products to Project site in original manufacturer's unopened cartons and containers, each bearing names of product and manufacturer, Project identification, and shipping and handling instructions.

B. Store products in dry spaces protected from the weather with ambient temperatures maintained between 65 deg F & 75 deg F; and with a relative humidity between 25-50% for 72 hours before installation, during installation, and 72 hours after installation is completed. Store floor tiles on flat surfaces. Do not store cartons directly on concrete floor.

C. Ventilate products prior to installation. Remove packaging and ventilate in a secure, dry, well-ventilated space free from strong contaminant source and residues. Provide a temperature range of 65 deg F minimum to 75 deg F maximum continuously for minimum 72 hours. Do not ventilate within limits of work, if at all possible.

1.6 PROJECT CONDITIONS

A. Maintain a minimum temperature of 65 deg F in spaces to receive products specified in this Section for at least 48 hours prior to installation, during installation, and for not less than 48 hours after installation. After this period, maintain a temperature of not less than 65 deg F.

B. Do not install products until they are at the same temperature as that of the space where they are to be installed.

C. Close spaces to traffic during and 24 hours after floor tile installation.

1.7 SEQUENCING AND SCHEDULING: Sequence installing products specified in this Section with other construction to minimize possibility of damage and soiling during remainder of construction period.

1.8 EXTRA MATERIALS

A. Deliver extra materials to Owner. Furnish extra materials matching products installed as described below, packaged with protective covering for storage, and identified with labels clearly describing contents.
   1. Furnish not less than 10 linear feet for each 500 linear feet or fraction thereof of each different type and color of resilient wall base installed. Installer to leave for Owner's future use all whole and undamaged, usable strips, partially used cartons or packages, plus two (2) full cartons of each color base.

PART 2 - PRODUCTS

2.1 MANUFACTURERS

A. Available Products: Subject to compliance with requirements, products that may be incorporated in the Work include, but are not limited to the following:
   1. Armstrong

2. Roppe
3. Johnsonite

2.2 RESILIENT WALL BASE

A. Vinyl Wall Base: Products complying with FS SS-W-40, Type II, 4" high X 1/8" thick cove base, matte finish, as indicated on the Finish Schedule. Provide pre-molded inside and outside corners to match straight lengths.

B. Basis-of-Design Product: The design for Vinyl Wall base is based on **Johnsonite** (CB), 4' straight lengths, coved, as manufactured by Johnsonite, Chagin Falls, OH.

2.1 RESILIENT ACCESSORIES

A. Reducing Strips: Furnish vinyl or rubber reducing (edge) strips at all exposed edges of resilient floor covering, no less than 1 inch wide with a beveled forward edge, of the same thickness as floor covering material. Furnish colors and profiles as selected by Architect from full range of manufacturer's colors.

2.2 INSTALLATION MATERIALS

A. Concrete Slab Primer: Nonstaining type as recommended by flooring manufacturer.

B. Trowelable Underlayments and Patching Compounds: Latex- modified, portland-cement-based formulation provided or approved by flooring manufacturer for applications indicated.

C. Adhesives: Water-resistant type recommended by manufacturer to suit resilient flooring product and substrate conditions indicated.
   1. Use adhesives that comply with the following limits for VOC content when calculated, according to 40 CFR Part 59, Subpart D (EPA Method 24); not more than 54 g/L.

PART 3 - EXECUTION

3.1 EXAMINATION: Examine areas where installation of products specified in this Section will occur, with Installer present, to verify that substrates and conditions are satisfactory for installation and comply with manufacturer's requirements and those specified in this Section.

A. Proceed with installation only after unsatisfactory conditions have been corrected. Proceeding with installation indicates acceptance of the substrate.

3.2 PREPARATION

A. General: Comply with manufacturer's installation specifications for preparing substrates indicated to receive products indicated.

B. Use trowelable leveling and patching compounds per manufacturer's directions to fill cracks, holes, and depressions in substrates.

C. Remove coatings, including curing compounds, and other substances that are incompatible with flooring adhesives and that contain soap, wax, oil, or silicone, by using a terrazzo or concrete grinder, a drum sander, or a polishing machine equipped with a heavy-duty wire

brush.

D. Broom and vacuum clean substrates to be covered immediately before installing products specified in this Section. Following cleaning, examine substrates for moisture, alkaline salts, carbonation, or dust.

E. Apply concrete slab primer, if recommended by flooring manufacturer, prior to applying adhesive. Apply according to manufacturer's directions.

F. Perform a Calcium Chloride test in accordance to the flooring manufacturer's recommendation to determine the moisture vapor emission rate of the concrete subfloor, in no less than (2) rooms receiving the rubber tile flooring. If the test results exceed the limitations, the installation must not proceed until the problem has been corrected. Proceeding with the installation indicates acceptance of the substrate.

3.3 INSTALLATION

A. General: Install products specified in this Section using methods indicated according to manufacturer's installation directions.

B. Apply resilient wall base to walls, columns, pilasters, casework, and other permanent fixtures in rooms and areas where base is required. Install wall base in lengths as long as practicable. Tightly adhere wall base to substrate throughout length of each piece, with base in continuous contact with horizontal and vertical substrates.

1. On masonry surfaces or other similar irregular substrates, fill voids along top edge of resilient wall base with manufacturer's recommended adhesive filler material.
2. Install inside and exterior corners before installing straight pieces.

C. Place resilient accessories so they are butted to adjacent materials of type indicated and bond to substrates with adhesive. Install reducer strips at edges of flooring that otherwise would be exposed.

D. Lay out floor tiles from center marks established with principal walls, discounting minor offsets, so tiles at opposing edges of room are of equal width. Adjusting as necessary to avoid using cut widths that are equal to less than one-half tile at perimeter.

3.4 CLEANING AND PROTECTION

A. Perform the following operations immediately after completing installation:
1. Remove visible adhesive and other surface blemishes using cleaner recommended by manufacturers of resilient product involved.
2. Sweep or vacuum floor thoroughly.
3. Do not wash floor until after time period recommended by manufacturer.
4. Damp-mop resilient accessories to remove black marks and soil.

B. Protect flooring and accessories against mars, marks, indentations, and other damage from construction operations and placement of equipment and fixtures during remainder of construction period. Use protection methods indicated or recommended by manufacturer of resilient product involved.

1. Apply protective floor polish to resilient accessories that are free from soil, visible adhesive and surface blemishes.

C. Use commercially available metal, cross-linked, acrylic product acceptable to resilient accessory manufacturer.

D. Coordinate selection of floor polish with Owner's maintenance service.

1. Cover resilient accessories on floors with un-dyed, untreated building paper until inspection for Substantial Completion.

E. Clean products specified in this Section not more than 4 days prior to dates scheduled for inspections intended to establish date of Substantial Completion in each area of Project. Clean products using method recommended by manufacturer.

1. Strip protective floor polish that was applied after completing installation, prior to cleaning.

END OF SECTION 09 65 13

SECTION 09 65 19 - RESILIENT TILE FLOORING

PART 1 - GENERAL

1.1 RELATED DOCUMENTS:

A. Drawings and general provisions of the Contract, including General and Supplementary Conditions and Division 01 Specification Sections, apply to this Section.

1.2 SUMMARY

A. Section Includes:
   1. Vinyl composition floor tile.

B. Related Sections include the following:

   1. Division 09 Section "Resilient Base and Accessories" for resilient wall base and accessories installed with resilient flooring

1.3 SUBMITTALS

A. Samples for Verification: Full-size units of each color and pattern of floor tile required.

B. Quality Assurance/ Control Submittals:
   1. Product Data: For each type of product indicated. Include manufacturer's written data on physical characteristics, durability, and fade resistance. Include installation recommendations for each type of substrate.

C. Closeout Submittals:
   1. Maintenance Data: For each type of floor tile to include in maintenance manuals.
   2. Warranty: Special warranty specified in this Section.
   3. Receipt for extra materials

D. Maintenance Data: For each type of floor tile to include in maintenance manuals.

1.4 QUALITY ASSURANCE

A. Installer Qualifications: A qualified installer who employs workers for this Project who are competent in techniques required by manufacturer for floor tile installation indicated.

   1. Engage an installer who employs workers for this Project who are trained or certified by manufacturer for installation techniques required.

B. Fire-Test-Response Characteristics: As determined by testing identical products according to ASTM E 648 or NFPA 253 by a qualified testing agency.

1. Critical Radiant Flux Classification: Class I, not less than 0.45 W/sq. cm.

1.5 DELIVERY, STORAGE, AND HANDLING

A. Store floor tile and installation materials in dry spaces protected from the weather, with ambient temperatures maintained within range recommended by manufacturer, but not less than 65 deg F or more than 85 deg F and with a relative humidity between 25-50%. Store floor tiles on flat surfaces.

B. Indoor Air Quality
   1. Temporary Ventilation
      a. Ventilate products prior to installation. Remove from packaging and ventilate in a secure, dry, well-ventilated space free from strong contaminate source and residues. Provide a temperature range of 65 deg F minimum to 95 deg F maximum continuously for minimum 72 hours. Do not ventilate within limits of work, if at all possible.

1.6 PROJECT CONDITIONS

A. Maintain ambient temperatures within range recommended by manufacturer, but not less than 65 deg F or more than 95 deg F, with a relative humidity not greater than 70%, in spaces to receive floor tile during the following time periods:

   1. 48 hours before installation.
   2. During installation.
   3. 48 hours after installation.

B. Until Substantial Completion, maintain ambient temperatures within range recommended by manufacturer, but not less than 55 deg F or more than 95 deg F.

C. Close spaces to traffic during floor tile installation.

D. Close spaces to traffic for 48 hours after floor tile installation.

E. Install floor tile after other finishing operations, including painting, have been completed.

F. Floor tile installation must be coordinated with the Owner's Data Equipment Contractor i.e. the tile must be installed, inspected and approved prior to the Owner's equipment is set on it. This will occur prior to the Project's final completion.

1.7 WARRANTY

A. Special Warranty: Manufacturer's standard form in which manufacturer agrees to repair or replace VCT tiles that do no comply with requirements or that fail in wear surface, provided tiles are installed and maintained in accordance with recommended procedures and it subject to commercial traffic use within specified warranty period.
   1. Warranty does not include deterioration or failure of VCT tile due to unusual traffic, failure of substrate, vandalism, or abuse.
   2. Warranty Period: 5 years from date of Substantial Completion.

1.8 EXTRA MATERIALS

A. Furnish extra materials that match products installed and that are packaged with protective covering for storage and identified with labels describing contents.
   1. Floor Tile: Furnish 1 box for every 50 boxes or fraction thereof, of each type, color, and pattern of floor tile installed.

PART 2 - PRODUCTS

2.1 VINYL COMPOSITION FLOOR TILE

A. Products: Basis-of-Design VCT Tile:
   1. Armstrong World Industries, Inc.; Standard Excelon Imperial Texture
   2. Prior Approved Equals

B. Colors and Patterns: A geometric pattern with up to 4 colors of full-sized tiles as selected by Architect from full range of manufacturer's colors, typically using a border, field and accents.

2.2 INSTALLATION MATERIALS

A. Trowelable Leveling and Patching Compounds: Latex-modified, portland cement based or blended hydraulic-cement-based formulation provided or approved by manufacturer for applications indicated.

B. Latex-based liquid primer
   a. Apply primer to underlayment prior to installing VCT

C. Adhesives: Water-resistant type recommended by manufacturer to suit floor tile and substrate conditions indicated.

   1. Adhesives shall comply with the following limits for VOC content when calculated according to 40 CFR 59, Subpart D (EPA Method 24):

      a. VCT and Asphalt Tile Adhesives: Not more than 50 g/L.

   2. Adhesives shall comply with the testing and product requirements of the California Department of Health Services' "Standard Practice for the Testing of Volatile Organic Emissions from Various Sources Using Small-Scale Environmental Chambers."

D. Floor Polish: Provide protective liquid floor polish products as recommended by manufacturer.

PART 3 - EXECUTION

3.1 EXAMINATION

A. Examine substrates, with Installer present, for compliance with requirements for maximum moisture content and other conditions affecting performance of the Work.

B. Verify that finishes of substrates comply with tolerances and other requirements specified in other Sections and that substrates are free of cracks, ridges, depressions, scale, and foreign deposits that might interfere with adhesion of floor tile.

C. Insure the cement underlayment has compression strength equal to or greater than 3,500psi. in order to maintain Armstrong's manufacturer warranty.

D. Proceed with installation only after unsatisfactory conditions have been corrected. Proceeding with installation indicates acceptance of the substrate.

3.2 PREPARATION

A. Prepare substrates according to manufacturer's written instructions to ensure adhesion of resilient products.

B. Insure the cement underlayment has been sealed according to the requirements of the cement underlayment manufacture prior to installing VCT.

C. Concrete Substrates: Prepare according to ASTM F 710.

1. Verify that substrates are dry and free of curing compounds, sealers, and hardeners.
2. Remove substrate coatings and other substances that are incompatible with adhesives and that contain soap, wax, oil, or silicone, using mechanical methods recommended by manufacturer. Do not use solvents.
3. Alkalinity and Adhesion Testing: Perform tests recommended by manufacturer. Proceed with installation only after substrates pass testing.
4. Moisture Testing: Perform tests recommended by manufacturer. Proceed with installation only after substrates pass testing.

    a. Perform anhydrous calcium chloride test, ASTM F 1869. Proceed with installation only after substrates have maximum moisture-vapor-emission rate of 5 lb of water/1000 sq. ft. in 24 hours.
    b. Perform relative humidity test using in situ probes, ASTM F 2170. Proceed with installation only after substrates have a maximum **75%** relative humidity level measurement.

D. Use trowelable leveling and patching compounds, according to manufacturer's written instructions, to fill cracks, holes, depressions, and protrusions in substrates. Fill or level cracks, holes and depressions 1/8 inch wide or wider and protrusions more than 1/32 inch, unless more stringent requirements are required by manufacturer's written instructions.

E. Do not install floor tiles until they are same temperature as space where they are to be installed.
1. Move resilient products and installation materials into spaces where they will be installed at least 48 hours in advance of installation.

F. Sweep and vacuum clean substrates to be covered by resilient products immediately before installation.
1. Any trapped debris that telegraphs through the tile will be cause to remove the tile (and debris) and replace it with a new tile.

3.3 INSTALLATION

A. Comply with manufacturer's written instructions for installing floor tile.

B. Lay out floor tiles from center marks established with principal walls, discounting minor offsets, so tiles at opposite edges of room are of equal width. Adjust as necessary to avoid using cut widths that equal less than one-half tile at perimeter.

1. Lay tiles in pattern indicated by architect

C. Match floor tiles for color and pattern by selecting tiles from cartons in the same sequence as manufactured and packaged, if so numbered. Discard broken, cracked, chipped, or deformed tiles.

1. See Drawings for layouts and patterns

D. Scribe, cut, and fit floor tiles to butt neatly and tightly to vertical surfaces and permanent fixtures including built-in furniture, cabinets, pipes, outlets, and door frames.

E. Extend floor tiles into toe spaces, door reveals, closets, and similar openings. Extend floor tiles to center of door openings.

F. Maintain reference markers, holes, and openings that are in place or marked for future cutting by repeating on floor tiles as marked on substrates. Use chalk or other nonpermanent, nonstaining marking device.

G. Install floor tiles on covers for telephone and electrical ducts, building expansion-joint covers, and similar items in finished floor areas. Maintain overall continuity of color and pattern between pieces of tile installed on covers and adjoining tiles. Tightly adhere tile edges to substrates that abut covers and to cover perimeters.

H. Adhere floor tiles to flooring substrates using a full spread of adhesive applied to substrate to produce a completed installation without open cracks, voids, raising and puckering at joints, telegraphing of adhesive spreader marks, and other surface imperfections.

I. Following installation of tile (typically within an hour after installation), roll entire floor area with minimum 100 lb. roller to ensure proper bonding.

3.4 CLEANING AND PROTECTION

A. Comply with manufacturer's written instructions for cleaning and protection of floor tile.

B. Perform the following operations immediately after completing floor tile installation:

1. Remove adhesive and other blemishes from exposed surfaces.
2. Sweep and vacuum surfaces thoroughly.
3. Damp-mop surfaces to remove marks and soil.

C. Protect floor tile products from mars, marks, indentations, and other damage from construction operations and placement of equipment and fixtures during remainder of construction period.

D. Floor Polish: Remove soil, visible adhesive, and surface blemishes from floor tile surfaces before applying liquid floor polish.

1. Apply two coats of floor wax as recommended by the manufacturer, buff to achieve a high-gloss finish.

E. Cover floor tile until Substantial Completion.

END OF SECTION 09 65 19

SECTION 09 91 00 - PAINTING

PART 1 - GENERAL

1.1 RELATED DOCUMENTS:

A. Drawings and general provisions of the Contract, including General and Supplementary Conditions and Division 01 Specification Sections, apply to this Section.

1.2 SUMMARY

A. This Section includes surface preparation and field painting of exposed exterior and interior items and surfaces.

1. Surface preparation, priming, and finish coats specified in this Section are in addition to shop priming and surface treatment specified in other Sections.

B. Paint exposed surfaces, except where these Specifications indicate that the surface or material is not to be painted or is to remain natural. If an item or a surface is not specifically mentioned, paint the item or surface the same as similar adjacent materials or surfaces. If a color of finish is not indicated, Architect will select from standard colors and finishes available.

1. Painting includes field painting of exposed bare and covered pipes and ducts (including color coding), hangers, exposed steel and iron supports, and surfaces of mechanical and electrical equipment even those that have a factory-applied final finish.
   a. Paint all exposed surfaces incorporated in or associated with the work of this project. It is the Architect's intent to have at the projects completion all items coordinated with the projects color scheme.
   b. Typical color schemes will require a typical wall color and accent wall color(s). Soffits may also require a typical soffit color and accent soffit color(s).

C. Do not paint items in concealed spaces, finished metal surfaces, operating parts, and labels.

1. Prefinished items include the following factory-finished components:
   a. Light fixtures, unless noted otherwise.
2. Concealed surfaces include walls or ceilings in the following generally inaccessible spaces:
   a. Furred areas.
   b. Ceiling plenums.
   c. Utility tunnels.
   d. Pipe spaces.
   e. Duct shafts.
3. Finished metal surfaces include the following:
   a. Anodized aluminum.
   b. Stainless steel.
   c. Chromium plate.
   d. Copper and copper alloys.
   e. Bronze and brass.
4. Operating parts include moving parts of operating equipment and the following:
   a. Valve and damper operators.
   b. Linkages.
   c. Sensing devices.
   d. Motor and fan shafts.

5. Labels: Do not paint over UL, FMG, or other code-required labels or equipment name, identification, performance rating, or nomenclature plates.

D. Related Sections:
1. Division 05 Section "Structural Steel" for shop priming structural steel.
2. Division 05 Section "Metal Fabrications" for shop priming ferrous metal.
3. Division 08 Section "Hollow Metal Doors and Frames" for factory priming steel doors and frames.
4. Division 09 Section "Gypsum Board" for surface preparation of gyp board.

1.3 DEFINITIONS

A. General: Standard coating terms defined in ASTM D 16 apply to this Section.

1. Flat refers to a lusterless or matte finish with a gloss range below 5 when measured at an 85-degree meter.
2. Eggshell refers to low-sheen finish with a gloss range between 10 and 25 when measured at a 60-degree meter.
3. Semigloss refers to medium-sheen finish with a gloss range between 25 and 50 when measured at a 60-degree meter.
4. Full gloss refers to high-sheen finish with a gloss range more than 60 when measured at a 60-degree meter.

1.4 SUBMITTALS

A. Product Data: For each paint system indicated. Include block fillers and primers.

1. Material List: An inclusive list of required coating materials. Indicate each material and cross-reference specific coating, finish system, and application. Identify each material by manufacturer's catalog number and general classification.
2. Manufacturer's Information: Manufacturer's technical information, including label analysis and instructions for handling, storing, and applying each coating material.

B. Samples for Initial Selection: For each type of finish-coat material indicated.

1. After product selection, Architect will furnish color chips for surfaces to be coated.

C. Samples for Verification: For each color and material to be applied, with texture to simulate actual conditions, on the actual substrate.

1. On actual wall surface and other interior and exterior building components, provide painted finishes complete with all preparation and components. For walls paint 100 sq ft of surface as directed until required, sheen, color and texture is obtained. Simulate finished lighting conditions for review. For other items paint sufficient areas as to represent completed work.
   a. Final acceptance of colors will be from samples applied on job.

1.5 QUALITY ASSURANCE

A. Applicator Qualifications: A firm or individual experienced in applying paints and coatings similar in material, design, and extent to those indicated for this Project, whose work has resulted in applications with a record of successful in-service performance.

B. Source Limitations: Obtain block fillers and primers for each coating system from the same manufacturer as the finish coats.

1.6 DELIVERY, STORAGE, AND HANDLING

A. Deliver materials to Project site in manufacturer's original, unopened packages and containers bearing manufacturer's name and label and the following information:

1. Product name or title of material.
2. Product description (generic classification or binder type).
3. Manufacturer's stock number and date of manufacture.
4. Contents by volume, for pigment and vehicle constituents.
5. Thinning instructions.
6. Application instructions.
7. Color name and number.
8. VOC content.

B. Store materials not in use in tightly covered containers in a well-ventilated area at a minimum ambient temperature of 45 deg F (7 deg C). Maintain storage containers in a clean condition, free of foreign materials and residue.

1. Protect from freezing. Keep storage area neat and orderly. Remove oily rags and waste daily.

1.7 PROJECT CONDITIONS

A. Apply waterborne paints only when temperatures of surfaces to be painted and surrounding air are between 50 and 90 deg F (10 and 32 deg C).

B. Apply solvent-thinned paints only when temperatures of surfaces to be painted and surrounding air are between 45 and 95 deg F (7 and 35 deg C).

C. Do not apply paint in snow, rain, fog, or mist; or when relative humidity exceeds 85 percent; or at temperatures less than 5 deg F (3 deg C) above the dew point; or to damp or wet surfaces.

1. Painting may continue during inclement weather if surfaces and areas to be painted are enclosed and heated within temperature limits specified by manufacturer during application and drying periods.

1.8 EXTRA MATERIALS

A. Furnish extra paint materials from the same production run as the materials applied and in the quantities described below. Package with protective covering for storage and identify with labels describing contents. Deliver extra materials to Owner.

1. Quantity: Furnish Owner with extra paint materials in quantities indicated below:
   a. One (1) gallon of each type, color, and sheen of paint used on the project in a labeled and unopened container.

PART 2 - PRODUCTS

2.1 MANUFACTURERS

A. Available Products: Subject to compliance with requirements, products that may be incorporated into the Work include, but are not limited to, products listed in other Part 2 articles.

B. Manufacturers' Names: Shortened versions (shown in parentheses) of the following manufacturers' names are used in other Part 2 articles:

1. Benjamin Moore & Co. (Benjamin Moore).
2. ICI Dulux Paint Centers (ICI Dulux Paints).
3. Sherwin Williams Paints (SW) .
4. Approved equals

2.2 PAINT MATERIALS, GENERAL

A. Material Compatibility: Provide block fillers, primers, and finish-coat materials that are compatible with one another and with the substrates indicated under conditions of service and application, as demonstrated by manufacturer based on testing and field experience.

B. Material Quality: Provide manufacturer's best-quality paint material of the various coating types specified that are factory formulated and recommended by manufacturer for application indicated. Paint-material containers not displaying manufacturer's product identification will not be acceptable.

1. Proprietary Names: Use of manufacturer's proprietary product names to designate colors or materials is not intended to imply that products named are required to be used to the exclusion of equivalent products of other manufacturers. Furnish manufacturer's material data and certificates of performance for proposed substitutions.

C. Colors: As selected by Architect from manufacturer's full range.

D. Chemical Components of Interior Paints and Coatings: Provide products that comply with the following limits for VOC content when calculated according to 40 CFR 59, Subpart D (EPA Method 24) and the following chemical restrictions:

1. Flat Paints and Coatings: VOC content of not more than 50 g/L.
2. Non-Flat Paints and Coatings: VOC content of not more than 150 g/L.
3. Anticorrosive Coatings: VOC content of not more than 250 g/L.
4. Varnishes and Sanding Sealers: VOC content of not more than 350 g/L.
5. Stains: VOC content of not more than 250 g/L.
6. Aromatic Compounds: Paints and coatings shall not contain more than 1.0 percent by weight of total aromatic compounds (hydrocarbon compounds containing one or more benzene rings).
7. Restricted Components: Paints and coatings shall not contain any of the following:
   a. Acrolein.
   b. Acrylonitrile.
   c. Antimony.
   d. Benzene.
   e. Butyl benzyl phthalate.
   f. Cadmium.
   g. Di (2-ethylhexyl) phthalate.
   h. Di-n-butyl phthalate.
   i. Di-n-octyl phthalate.
   j. 1,2-dichlorobenzene.
   k. Diethyl phthalate.
   l. Dimethyl phthalate.
   m. Ethylbenzene.
   n. Formaldehyde.
   o. Hexavalent chromium.
   p. Isophorone.
   q. Lead.
   r. Mercury.
   s. Methyl ethyl ketone.
   t. Methyl isobutyl ketone.
   u. Methylene chloride.
   v. Naphthalene.
   w. Toluene (methylbenzene).
   x. 1,1,1-trichloroethane.
   y. Vinyl chloride.

2.3 EXTERIOR PRIMERS

A. Exterior Ferrous-Metal Primer: Factory-formulated rust-inhibitive metal primer for exterior application.
   1. Sherwin Williams Pro Industrial Pro-Cryl Universal Metal Primer, B66-310, <100g/L VOC: Applied at a dry film thickness of not less than 2.0 mils.
   2. Benjamin Moore; Moore's IMC Alkyd Metal Primer No. M06: Applied at a dry film thickness of not less than 2.0 mils.
   3. ICI Dulux Paints; 4160-XXXX Devguard Multi-Purpose Tank & Structural Primer. Applied at a dry film thickness of not less than 2.0 mils.
   4. Approved equals

B. Exterior Galvanized Metal Primer: Factory-formulated galvanized metal primer for exterior application.
   1. Sherwin Williams Pro-Cryl Universal Metal Primer, B66-310, <100 g/L VOC: Applied at a dry film thickness of not less than 2.0 mils.
   2. Benjamin Moore; Moore's IMC Acrylic Metal Primer No. M04: Applied at a dry film thickness of not less than 2.0 mils.
   3. ICI Dulux Paints; 4160-XXXX Devguard Multi-Purpose Tank & Structural Primer: Applied at a dry film thickness of not less than 2.0 mils.
   4. Approved equals

2.4 INTERIOR PRIMERS

A. Interior Concrete and Masonry Primer: Factory-formulated alkali-resistant acrylic-latex interior primer for interior application.

   1. Sherwin Williams Loxon Concrete & Masonry Primer, A24W8300, <100 g/L VOC: Applied at a dry film thickness of not less than 3.0 mils.
   2. Benjamin Moore; Moorcraft Super Spec Latex Enamel Undercoater & Primer Sealer No. 253: Applied at a dry film thickness of not less than 1.2 mils.
   3. ICI Dulux Paints; 3030-1200 Bond-Prep Interior/Exterior Waterborne Pigmented Bonding Primer: Applied at a dry film thickness of not less than 1.8 mils.
   4. Approved equals

B. Interior Gypsum Board and New Gypsum Plaster Primer: Factory-formulated latex-based primer for interior application.
   1. Sherwin Williams ProMar 200 Zero VOC Primer, B28W2600, 0 g/L VOC: Applied at a dry film thickness of not less than 1.2 mils.
   2. Benjamin Moore; Moorcraft Super Spec Latex Enamel Undercoater & Primer Sealer No. 253: Applied at a dry film thickness of not less than 1.2 mils.
   3. ICI Dulux Paints; 1000-1200 Dulux Ultra Basecoat Interior Latex Wall Primer: Applied at a dry film thickness of not less than 1.2 mils.
   4. Approved equals

C. Interior Ferrous-Metal Primer: Factory-formulated quick-drying rust-inhibitive metal primer.
   1. Sherwin Williams Pro Industrial Pro-Cryl Universal Metal Primer, B66-310, <100 g/L VOC: Applied at a dry film thickness of not less than 2.0 mils.
   2. Benjamin Moore; Moore's IMC Alkyd Metal Primer No. M06: Applied at a dry film thickness of not less than 2.0 mils.
   3. ICI Dulux Paints; 4160-6130 Devguard Multi-Purpose Tank & Structural Primer: Applied at a dry film thickness of not less than 2.0 mils.
   4. Approved equals

D. Interior Zinc-Coated Metal Primer: Factory-formulated galvanized metal primer.
   1. Sherwin Williams Pro Industrial Pro-Cryl Universal Metal Primer, B66-310, <100 g/L VOC: Applied at a dry film thickness of not less than 2.0 mils.
   2. Benjamin Moore; Moore's IMC Acrylic Metal Primer No. M04: Applied at a dry film thickness of not less than 2.0 mils.
   3. ICI Dulux Paints; 4160-6130 Devguard Multi-Purpose Tank & Structural Primer: Applied at a dry film thickness of not less than 2.0 mils.
   4. Approved equals

2.5 EXTERIOR FINISH COATS

A. Exterior Semigloss Acrylic Enamel: Factory-formulated semigloss waterborne acrylic-latex enamel for exterior application.

   1. Sherwin Williams A-100 Exterior Latex Satin, A82 series, <50 g/L VOC: Applied at a dry film thickness of not less than 1.2 mils.
   2. Benjamin Moore; Moorcraft Super Spec Latex House & Trim Paint No. 170: Applied at a dry film thickness of not less than 1.1 mils.
   3. ICI Dulux Paints; 2406-XXXX Dulux Professional Exterior 100 Percent Acrylic Semi-Gloss Finish: Applied at a dry film thickness of not less than 1.3 mils.
   4. Approved equals.

B. Exterior Full-Gloss Acrylic Enamel for Ferrous and Other Metals: Factory-formulated full-gloss waterborne acrylic-latex enamel for exterior application.

   1. Sherwin Williams Pro Industrial Zero VOC Acrylic Gloss, B66-600 series, <0 g/L VOC: Applied at a dry film thickness of not less than 2.5 mils.
   2. Benjamin Moore; Moore's IMC Acrylic Gloss Enamel M28: Applied at a dry film thickness of not less than 2.0 mils.
   3. ICI Dulux Paints; 3028-XXXX Dulux Interior/Exterior Acrylic Gloss Finish: Applied at a dry film thickness of not less than 1.6 mils.
   4. Approved equals.

C. Exterior Full-Gloss Alkyd Enamel: Factory-formulated full-gloss alkyd enamel for exterior application.

   1. Sherwin Williams Pro Industrial Urethane Alkyd, B54-150 Series: Applied at a dry film thickness of not less than 2.0 mils.
   2. Benjamin Moore; Moore's IMC Urethane Alkyd Enamel M22: Applied at a dry film thickness of not less than 2.0 mils.
   3. ICI Dulux Paints; 4308-XXXX Devguard Alkyd Industrial Gloss Enamel: Applied at a dry film thickness of not less than 2.0 mils.
   4. Approved equals.

2.6 INTERIOR FINISH COATS

A. Interior Low-Luster Acrylic Enamel: Factory-formulated eggshell acrylic-latex interior enamel.
   1. Sherwin Williams ProMar 200 Zero VOC Eg-Shel, B26-2600 series, 0/L VOC: Applied at a dry film thickness of not less than 1.5 mils.
   2. Benjamin Moore; Moorcraft Super Spec Latex Eggshell Enamel No. 274: Applied at a dry film thickness of not less than 1.3 mils.
   3. ICI Dulux Paints; 1402-XXXX Dulux Professional Acrylic Eggshell Interior Wall & Trim Enamel: Applied at a dry film thickness of not less than 1.4 mils.

4. Approved equals.

B. Interior Semigloss Acrylic Enamel: Factory-formulated semigloss acrylic-latex enamel for interior application.
1. Sherwin Williams ProMar 200 Zero VOC Semi-Gloss, B31-2600 series, 0/L VOC: Applied at a dry film thickness of not less than 1.5 mils.
2. Benjamin Moore; Moorcraft Super Spec Latex Semi-Gloss Enamel No. 276: Applied at a dry film thickness of not less than 1.2 mils.
3. ICI Dulux Paints; 1406-XXXX Dulux Professional Acrylic Semi-Gloss Interior Wall & Trim Enamel: Applied at a dry film thickness of not less than 1.5 mils.
4. Approved equals.
5. .

C. Interior Waterborne Epoxy Semi Water Borne Epoxy Semi-Gloss-2 Coats Gloss Finish (At scheduled interior walls and ceilings of toilet rooms and janitor closets)
1. Sherwin Williams Pro Industrial Pre-Catalyzed Water-Based Epoxy Semi-Gloss, K46 serie, <150 g/L VOC.
2. Devoe Paints: Tru-Glaze WB-4406.
3. Approved equals.

F. Tinted Concrete Floor Paint (with Full Gloss Finish)
1. Sherwin Williams Waterbased Polyurethane with tint, ArmorSeal 1K, color as selected by the Architect.
2. Approved equals.

PART 3 - EXECUTION

3.1 EXAMINATION

A. Examine substrates, areas, and conditions, with Applicator present, for compliance with requirements for paint application.
1. Proceed with paint application only after unsatisfactory conditions have been corrected and surfaces receiving paint are thoroughly dry.
2. Start of painting will be construed as Applicator's acceptance of surfaces and conditions within a particular area.

B. Coordination of Work: Review other Sections in which primers are provided to ensure compatibility of the total system for various substrates. On request, furnish information on characteristics of finish materials to ensure use of compatible primers.
1. Notify Architect about anticipated problems when using the materials specified over substrates primed by others.

3.2 PREPARATION

A. General: Remove hardware and hardware accessories, plates, machined surfaces, lighting fixtures, and similar items already installed that are not to be painted. If removal is impractical or impossible because of size or weight of the item, provide surface-applied protection before surface preparation and painting.
1. After completing painting operations in each space or area, reinstall items removed using workers skilled in the trades involved.

B. Cleaning: Before applying paint or other surface treatments, clean substrates of substances that could impair bond of the various coatings. Remove oil and grease before cleaning.

1. Schedule cleaning and painting so dust and other contaminants from the cleaning process will not fall on wet, newly painted surfaces.

C. Surface Preparation: Clean and prepare surfaces to be painted according to manufacturer's written instructions for each particular substrate condition and as specified.
   1. Provide barrier coats over incompatible primers or remove and reprime.
   2. Cementitious Materials: Prepare concrete, concrete unit masonry, cement plaster, and mineral-fiber-reinforced cement panel surfaces to be painted. Remove efflorescence, chalk, dust, dirt, grease, oils, and release agents. Roughen as required to remove glaze. If hardeners or sealers have been used to improve curing, use mechanical methods of surface preparation.
      a. Use abrasive blast-cleaning methods if recommended by paint manufacturer.
      b. Determine alkalinity and moisture content of surfaces by performing appropriate tests. If surfaces are sufficiently alkaline to cause the finish paint to blister and burn, correct this condition before application. Do not paint surfaces if moisture content exceeds that permitted in manufacturer's written instructions.
      c. Clean concrete floors to be painted with a 5 percent solution of muriatic acid or other etching cleaner. Flush the floor with clean water to remove acid, neutralize with ammonia, rinse, allow to dry, and vacuum before painting.
   3. Wood: Clean surfaces of dirt, oil, and other foreign substances with scrapers, mineral spirits, and sandpaper, as required. Sand surfaces exposed to view smooth and dust off.
      a. Scrape and clean small, dry, seasoned knots, and apply a thin coat of white shellac or other recommended knot sealer before applying primer. After priming, fill holes and imperfections in finish surfaces with putty or plastic wood filler. Sand smooth when dried.
      b. Prime, stain, or seal wood to be painted immediately on delivery. Prime edges, ends, faces, undersides, and back sides of wood, including cabinets, counters, cases, and paneling.
      c. If transparent finish is required, backprime with spar varnish.
      d. Backprime paneling on interior partitions where masonry, plaster, or other wet wall construction occurs on back side.
      e. Seal tops, bottoms, and cutouts of unprimed wood doors with a heavy coat of varnish or sealer immediately on delivery.
   4. Ferrous Metals: Clean ungalvanized ferrous-metal surfaces that have not been shop coated; remove oil, grease, dirt, loose mill scale, and other foreign substances. Use solvent or mechanical cleaning methods that comply with SSPC's recommendations.
      a. Blast steel surfaces clean as recommended by paint system manufacturer and according to SSPC-SP 6/NACE No. 3.
      b. Treat bare and sandblasted or pickled clean metal with a metal treatment wash coat before priming.
      c. Touch up bare areas and shop-applied prime coats that have been damaged. Wire-brush, clean with solvents recommended by paint manufacturer, and touch up with same primer as the shop coat.
   5. Galvanized Surfaces: Clean galvanized surfaces with nonpetroleum-based solvents so surface is free of oil and surface contaminants. Remove pretreatment from galvanized sheet metal fabricated from coil stock by mechanical methods.

D. Material Preparation: Mix and prepare paint materials according to manufacturer's written instructions.

1. Maintain containers used in mixing and applying paint in a clean condition, free of foreign materials and residue.
2. Stir material before application to produce a mixture of uniform density. Stir as required during application. Do not stir surface film into material. If necessary, remove surface film and strain material before using.
3. Use only thinners approved by paint manufacturer and only within recommended limits.

E. Tinting: Tint each undercoat a lighter shade to simplify identification of each coat when multiple coats of same material are applied. Tint undercoats to match the color of the finish coat, but provide sufficient differences in shade of undercoats to distinguish each separate coat.

3.3 APPLICATION

A. General: Apply paint according to manufacturer's written instructions. Use applicators and techniques best suited for substrate and type of material being applied.
1. Paint colors, surface treatments, and finishes are indicated in the paint schedules.
2. Do not paint over dirt, rust, scale, grease, moisture, scuffed surfaces, or conditions detrimental to formation of a durable paint film.
3. Provide finish coats that are compatible with primers used.
4. The term "exposed surfaces" includes areas visible when permanent or built-in fixtures, grilles, convector covers, covers for finned-tube radiation, and similar components are in place. Extend coatings in these areas, as required, to maintain system integrity and provide desired protection.
5. Paint surfaces behind movable equipment and furniture the same as similar exposed surfaces. Before final installation of equipment, paint surfaces behind permanently fixed equipment or furniture with prime coat only.
6. Paint interior surfaces of ducts with a flat, nonspecular black paint where visible through registers or grilles.
7. Paint back sides of access panels and removable or hinged covers to match exposed surfaces.
8. Finish exterior doors on tops, bottoms, and side edges the same as exterior faces.
9. Finish interior of wall and base cabinets and similar field-finished casework to match exterior.
10. Sand lightly between each succeeding enamel or varnish coat.

B. Scheduling Painting: Apply first coat to surfaces that have been cleaned, pretreated, or otherwise prepared for painting as soon as practicable after preparation and before subsequent surface deterioration.
1. The number of coats and film thickness required are the same regardless of application method. Do not apply succeeding coats until previous coat has cured as recommended by manufacturer. If sanding is required to produce a smooth, even surface according to manufacturer's written instructions, sand between applications.
2. Omit primer over metal surfaces that have been shop primed and touchup painted.
3. If undercoats, stains, or other conditions show through final coat of paint, apply additional coats until paint film is of uniform finish, color, and appearance. Give special attention to ensure that edges, corners, crevices, welds, and exposed fasteners receive a dry film thickness equivalent to that of flat surfaces.
4. Allow sufficient time between successive coats to permit proper drying. Do not recoat surfaces until paint has dried to where it feels firm, and does not deform or feel sticky under moderate thumb pressure, and until application of another coat of paint does not cause undercoat to lift or lose adhesion.

C. Application Procedures: Apply paints and coatings by brush, roller, spray, or other applicators according to manufacturer's written instructions.
   1. Brushes: Use brushes best suited for type of material applied. Use brush of appropriate size for surface or item being painted.
   2. Rollers: Use rollers of carpet, velvet-back, or high-pile sheep's wool as recommended by manufacturer for material and texture required.
   3. Spray Equipment: Use airless spray equipment with orifice size as recommended by manufacturer for material and texture required.
      a. No spray painting will be permitted unless permission is obtained from the Architect and Owner following review of samples.

D. Minimum Coating Thickness: Apply paint materials no thinner than manufacturer's recommended spreading rate to achieve dry film thickness indicated. Provide total dry film thickness of the entire system as recommended by manufacturer.

E. Mechanical items to be painted include, but are not limited to, the following:
   1. Uninsulated metal piping.
   2. Uninsulated plastic piping.
   3. Pipe hangers and supports.
   4. Tanks.
   5. Visible portions of internal surfaces of metal ducts, without liner, behind air inlets and outlets.
   6. Duct, equipment, and pipe insulation.
   7. Mechanical equipment (roof top units and items exposed to public view) with factory finishes and factory-primed finish for field painting.

F. Electrical items to be painted include, but are not limited to, the following:
   1. Switchgear.
   2. Panelboards.
   3. Electrical equipment with factory finishes and factory-primed finish for field painting.
   4. All exposed and visible electrical equipment, conduits, enclosures, and accessories.

G. Prime Coats: Before applying finish coats, apply a prime coat, as recommended by manufacturer, to material that is required to be painted or finished and that has not been prime coated by others. Recoat primed and sealed surfaces where evidence of suction spots or unsealed areas in first coat appears, to ensure a finish coat with no burn-through or other defects due to insufficient sealing.

H. Pigmented (Opaque) Finishes: Completely cover surfaces as necessary to provide a smooth, opaque surface of uniform finish, color, appearance, and coverage. Cloudiness, spotting, holidays, laps, brush marks, runs, sags, ropiness, or other surface imperfections will not be acceptable.

I. Transparent (Clear) Finishes: Use multiple coats to produce a glass-smooth surface film of even luster. Provide a finish free of laps, runs, cloudiness, color irregularity, brush marks, orange peel, nail holes, or other surface imperfections.
   1. Provide satin finish for final coats unless otherwise noted.

J. Stipple Enamel Finish: Roll and redistribute paint to an even and fine texture. Leave no evidence of rolling, such as laps, irregularity in texture, skid marks, or other surface imperfections.

K. Completed Work: Match approved samples for color, texture, and coverage. Remove, refinish, or repaint work not complying with requirements.

3.4 FIELD QUALITY CONTROL

A. Owner reserves the right to invoke the following test procedure at any time and as often as Owner deems necessary during the period when paint is being applied:
   1. Owner will engage a qualified independent testing agency to sample paint material being used. Samples of material delivered to Project will be taken, identified, sealed, and certified in the presence of Contractor.
   2. Testing agency will perform appropriate tests for the following characteristics as required by Owner:
      a. Dry film thickness.
   3. Owner may direct Contractor to stop painting if test results show material being used does not comply with specified requirements. Contractor shall remove noncomplying paint from Project site, pay for testing, and repaint surfaces previously coated with the noncomplying paint. If necessary, Contractor may be required to remove noncomplying paint from previously painted surfaces if, on repainting with specified paint, the two coatings are incompatible.

3.5 CLEANING

A. Cleanup: At the end of each workday, remove empty cans, rags, rubbish, and other discarded paint materials from Project site.
   1. After completing painting, clean glass and paint-spattered surfaces. Remove spattered paint by washing and scraping without scratching or damaging adjacent finished surfaces.

3.6 PROTECTION

A. Protect work of other trades, whether being painted or not, against damage from painting. Correct damage by cleaning, repairing or replacing, and repainting, as approved by Architect.

B. Provide "Wet Paint" signs to protect newly painted finishes. After completing painting operations, remove temporary protective wrappings provided by others to protect their work.

   1. After work of other trades is complete, touch up and restore damaged or defaced painted surfaces. Comply with procedures specified in PDCA P1.

3.7 EXTERIOR PAINT SCHEDULE

A. Ferrous Metal: Provide the following finish systems over exterior ferrous metal. Primer is not required on shop-primed items.
   1. Semigloss Acrylic-Enamel Finish: Two finish coats over a rust-inhibitive primer.
      a. Primer: Exterior ferrous-metal primer.
      b. Finish Coats: Exterior semigloss acrylic enamel.

B. Zinc-Coated Metal: Provide the following finish systems over exterior zinc-coated metal surfaces:
   1. Semigloss Acrylic-Enamel Finish: Two finish coats over a galvanized metal primer.
      a. Primer: Exterior galvanized metal primer.
      b. Finish Coats: Exterior semigloss acrylic enamel.

3.8 INTERIOR PAINT SCHEDULE

A. Concrete and Masonry (Other Than Concrete Unit Masonry): Provide the following paint systems over interior concrete and brick masonry substrates:
   1. Semigloss Acrylic-Enamel Finish: Two finish coats over a primer.
      a. Primer: Interior concrete and masonry primer.
      b. Finish Coats: Interior semigloss acrylic enamel.

B. Gypsum Board: Provide the following finish systems over interior gypsum board surfaces:
   1. Low-Luster Acrylic-Enamel Finish: Two finish coats over a primer.
      a. Primer: Interior gypsum board primer.
      b. Finish Coats: Interior low-luster acrylic enamel.
   2. Semigloss Acrylic-Enamel Finish: Two finish coats over a primer.
      a. Primer: Interior gypsum board primer.
      b. Finish Coats: Interior semigloss acrylic enamel.

C. Ferrous Metal: Provide the following finish systems over ferrous metal:
   1. Semigloss Acrylic-Enamel Finish: Two finish coats over a primer.
      a. Primer: Interior ferrous-metal primer.
      b. Finish Coats: Interior semigloss acrylic enamel.

D. Zinc-Coated Metal: Provide the following finish systems over interior zinc-coated metal surfaces:
   1. Semigloss Acrylic-Enamel Finish: Two finish coats over a primer.
      a. Primer: Interior zinc-coated metal primer.
      b. Finish Coats: Interior semigloss acrylic enamel.

E. All-Service Jacket over Insulation: Provide the following finish system on cotton or canvas insulation covering:
   1. Flat Acrylic Finish: Two finish coats. Add fungicidal agent to render fabric mildew proof.
      a. Finish Coats: Interior flat latex-emulsion size.

F. Gypsum Board (Wet Areas): Provide the following finish system over gypsum board surfaces.
   1. Two Finish Coats over a primer.
      a. Primer: Interior gypsum board primer as recommended by finish coat manufacturer.
      b. Waterbase Catalyzed Epoxy

G. Concrete Floors: Provide the following finish system over concrete floor surfaces:
   1. High gloss at painted colored concrete floor – per manufactures requirements.
   2. Gloss Waterbased Polyurethane Paint – two finish coats.

END OF SECTION 09 91 00

SECTION 10 11 00 - VISUAL DISPLAY SURFACES

PART 1 - GENERAL

1.1 RELATED DOCUMENTS

A. Drawings and general provisions of the Contract, including General and Supplementary Conditions and Division 01 Specification Sections, apply to this Section.

1.2 SUMMARY

A. Section Includes:.
   1. Marker Boards .

B. Related Sections:
   1. Division 06 Section “Rough Carpentry” for fire treated wood blocking for mounting.
   2. Division 09 Section "Gypsum Board” as the substrate behind the Display Surfaces

1.3 DEFINITIONS

A. Visual Display Board Assembly: Visual display surface that is factory fabricated into composite panel form, either with or without a perimeter frame; includes chalkboards, markerboards, and tackboards.

1.4 SUBMITTALS

A. Product Data: For each type of product indicated. Include construction details, material descriptions, dimensions of individual components and profiles, and finishes for visual display surfaces.

B. Shop Drawings: For visual display surfaces. Include plans, elevations, sections, details, and attachments to other work.
   1. Show locations of panel joints.
   2. Include sections of typical trim members.

C. Samples for Initial Selection: For each type of visual display surface indicated, for units with factory-applied color finishes, and as follows:
   1. Include accessory Samples to verify color selected.

D. Maintenance Data: For visual display surfaces to include in maintenance manuals.

1.5 QUALITY ASSURANCE

A. Source Limitations: Obtain visual display surfaces from single source from single manufacturer.

1.6 DELIVERY, STORAGE, AND HANDLING

A. Deliver factory-built visual display surfaces, including factory-applied trim where indicated, completely assembled in one piece without joints, where possible. If dimensions exceed maximum manufactured panel size, provide two or more pieces of equal length as acceptable to Architect. When overall dimensions require delivery in separate units, prefit components at the factory, disassemble for delivery, and make final joints at the site.

B. Store visual display surfaces vertically with packing materials between each unit.

1.7 PROJECT CONDITIONS

A. Environmental Limitations: Do not deliver or install visual display surfaces until spaces are enclosed and weathertight, wet work in spaces is complete and dry, work above ceilings is complete, and temporary HVAC system is operating and maintaining ambient temperature and humidity conditions at occupancy levels during the remainder of the construction period.

1.8 WARRANTY

A. Special Warranty for Glass Surface Marker boards: Manufacturer's standard form in which manufacturer agrees to repair or replace glass sheets that fail in materials or workmanship within specified warranty period.

1. Failures include, but are not limited to, the following:

a. Surfaces lose original writing and erasing qualities.
b. Surfaces exhibit crazing, cracking, or flaking of back painting

2. Warranty Period: 50 years from date of Substantial Completion.

PART 2 - PRODUCTS

2.1 MARKER BOARDS

A. Porcelain-Enamel Face Sheet: ASTM A 424, enameling-grade steel, uncoated thickness indicated; with exposed face and edges coated with primer, 1.7-to-2.5-mil- (0.043-to-0.064-mm-) thick ground coat, and color cover coat; and with concealed face coated with primer and 1.7-to-2.5-mil- (0.043-to-0.064-mm-) thick ground coat.

1. Matte-Finish Cover Coat: Low reflective; chalk wipes clean with dry cloth or standard eraser. Minimum 2.0-to-2.5-mil- (0.051-to-0.064-mm-) thick cover coat. Cover and ground coats shall be fused to steel at manufacturer's standard firing temperatures but not less than 1250 deg F (677 deg C).

a. Products: Subject to compliance with requirements, provide one of the following.
1) PolyVision Corporation, a Steelcase company; P^3 ceramicsteel Chalkboard.
2) Claridge Products Inc.
3) Prior approved equals.

B. Hardboard: ANSI A135.4, tempered.

C. Particleboard: ANSI A208.1, Grade M-1, made with binder containing no urea formaldehyde.

D. Fiberboard: ASTM C 208.

E. Extruded Aluminum: ASTM B 221 (ASTM B 221M), Alloy 6063. For frame and chalk tray.

PART 3 - EXECUTION

3.1 EXAMINATION

A. Examine substrates and conditions, with Installer present, for compliance with requirements for installation tolerances, surface conditions of wall, and other conditions affecting performance of the Work.

B. Examine walls and partitions for proper preparation and backing for visual display surfaces.

C. Proceed with installation only after unsatisfactory conditions have been corrected.

3.2 PREPARATION

A. Comply with manufacturer's written instructions for surface preparation and installation.

B. Clean substrates of substances that could impair the performance of and affect the smooth, finished surfaces of visual display boards, including dirt, mold, and mildew.

3.3 INSTALLATION, GENERAL

A. General: Install visual display surfaces in locations and at mounting heights indicated on Drawings, or if not indicated, at heights indicated below. Keep perimeter lines straight, level, and plumb. Provide grounds, clips, backing materials, adhesives, brackets, anchors, trim, and accessories necessary for complete installation.

3.4 INSTALLATION OF FACTORY-FABRICATED VISUAL DISPLAY BOARDS AND ASSEMBLIES

A. Visual Display Boards: Attach concealed clips, hangers, and grounds to wall surfaces and to visual display boards with fasteners at not more than 16 inches (400 mm) o.c. Secure both top and bottom of boards to walls.

B. Homasote PINnacle Panels: Stainless steel screws with hex drive and stainless steel washers.

3.5 CLEANING AND PROTECTION

A. Clean visual display surfaces according to manufacturer's written instructions. Attach one cleaning label to visual display surface in each room.

B. Touch up factory-applied finishes to restore damaged or soiled areas.

C. Cover and protect visual display surfaces after installation and cleaning.

END OF SECTION 101100

SECTION 10 14 00 - SIGNAGE

PART 1 - GENERAL

1.1 RELATED DOCUMENTS

A. Drawings and general provisions of the Contract, including General and Supplementary Conditions and Division 01 Specification Sections, apply to this Section.

1.2 SUMMARY

A. This Section includes the following:

1. Door and Panel Signage.

B. Related Sections include the following:
1. Division 01 Section "Temporary Facilities and Controls" for temporary Project identification signs and for temporary information and directional signs.
2. Division 06 Section “Rough Carpentry” for wood blocking for attachment of metal letters where required.

1.3 SUBMITTALS

A. Product Data: For each type of product indicated.

B. Shop Drawings: Show fabrication and installation details for signs.

1. Show sign mounting heights, locations of supplementary supports to be provided by others, and accessories.
2. Provide message list, typestyles, graphic elements, including tactile characters and Braille, and layout for each sign.

C. Samples for Initial Selection: Manufacturer's color charts consisting of actual units or sections of units showing the full range of colors available for the following:
1. Aluminum.
2. Acrylic sheet.
3. Die-cut vinyl characters and graphic symbols. Include representative samples of available typestyles and graphic symbols.

D. Samples for Verification: For each of the following products and for the full range of color, texture, and sign material indicated, of sizes indicated:
1. Panel Signs: Full size sample of each type of required.

E. Sign Schedule: Use same designations indicated on Drawings.
1. Panel Signs: Provide a sign for each exterior and interior door opening.

F. Maintenance Data: For signs to include in maintenance manuals.

1.4 QUALITY ASSURANCE

A. Installer Qualifications: Installer to have demonstrated successful experience for installation of the types of signage indicated.

B. Source Limitations for Signs: Obtain each sign type indicated from one source from a single manufacturer.

C. Regulatory Requirements: Comply with applicable provisions in ADA-ABA Accessibility Guidelines.

1.5 COORDINATION: Coordinate placement of anchorage devices with templates for installing signs.

1.6 WARRANTY

A. Special Warranty: Manufacturer's standard form in which manufacturer agrees to repair or replace components of signs that fail in materials or workmanship within specified warranty period.

1. Failures include, but are not limited to, the following:
   a. Deterioration of embedded graphic image colors and sign lamination.
2. Warranty Period: Two years from date of Substantial Completion.

PART 2 - PRODUCTS

2.1 MATERIALS

A. Aluminum Castings: ASTM B 26/B 26M, of alloy and temper recommended by sign manufacturer for casting process used and for use and finish indicated.

B. Acrylic Sheet: ASTM D 4802, Category A-1 (cell-cast sheet), Type UVA (UV absorbing).

C. Polycarbonate Sheet: Of thickness indicated, manufactured by extrusion process, coated on both surfaces with abrasion-resistant coating:

1. Impact Resistance: 16 ft-lbf/in. (854 J/m) per ASTM D 256, Method A.
2. Tensile Strength: 9000 lbf/sq. in. (62 MPa) per ASTM D 638.
3. Flexural Modulus of Elasticity: 340,000 lbf/sq. in. (2345 MPa) per ASTM D 790.
4. Heat Deflection: 265 deg F (129 deg C) at 264 lbf/sq. in. (1.82 MPa) per ASTM D 648.
5. Abrasion Resistance: 1.5 percent maximum haze increase for 100 revolutions of a Taber abraser with a load of 500 g per ASTM D 1044.

D. Applied Vinyl: Die-cut characters from vinyl film of nominal thickness of 3 mils with pressure-sensitive adhesive backing, suitable for exterior applications.

2.2 PANEL SIGNS

A. Manufacturers:

1. ASI-Modulex, Inc. www.asimodulex.com
2. Best Sign Systems Inc. www.bestsigns.com
3. Century Sign Builders. www.csbsigns.com
4. Gemini Incorporated. www.geminiplaques.com
5. Innerface Sign Systems, Inc. www.innerfacesign.com
6. InPro Corporation. www.inprocorp.com
7. Mohawk Sign Systems. www.mohawksign.com
8. Nelson-Harkins Industries. www.nelson-harkins.com
9. Seton Identification Products. www.seton.com

B. Interior Panel Signs, General:
1. 1/8 inch thick, laminated, etched photopolymer sign with raised characters, graphics, and Braille 1/32 inch above surface with contrasting colors and laminated to acrylic back. Colors as selected by Architect from manufacturer's full range.

2. Edge Condition: Beveled.
3. Corner Condition: Rounded.
4. Mounting: Wall mounted with two-face tape unless manufacturer recommends mechanical anchors for substrates encountered.

C. Toilet Room Signs:
1. Sign Size: 8 inch by 8 inch minimum.
2. Message Panel Finish/Color: As selected by Architect.
3. Background Finish/Color: As selected by Architect.
4. Character Size: 5/8 inch minimum.
5. Character Finish/Color: As selected by Architect.
6. Text: Refer to schedule following this Section.

D. Permanent Room Signs:
1. Sign Size: 8 inch by 4 inch minimum.
2. Message Panel Finish/Color: As selected by Architect.
3. Background Finish/Color: As selected by Architect.
4. Character Size: 5/8 inch minimum.
5. Character Finish/Color: As selected by Architect.

Text: Provide room name (2 lines maximum); room number (1 line); and braille (1 line).

2.3 ACCESSORIES

A. Anchors and Inserts: Provide nonferrous-metal or hot-dip galvanized anchors and inserts for exterior installations and elsewhere as required for corrosion resistance. Use toothed steel or lead expansion-bolt devices for drilled-in-place anchors. Furnish inserts, as required, to be set into concrete or masonry work.

2.4 FABRICATION

A. General: Provide manufacturer's standard signs of configurations indicated.
1. Conceal fasteners if possible; otherwise, locate fasteners where they will be inconspicuous.

2.5 FINISHES, GENERAL

A. Comply with NAAMM's "Metal Finishes Manual for Architectural and Metal Products" for recommendations for applying and designating finishes.

B. Protect mechanical finishes on exposed surfaces from damage by applying a strippable, temporary protective covering before shipping.

C. Appearance of Finished Work: Variations in appearance of abutting or adjacent pieces are acceptable if they are within one-half of the range of approved Samples. Noticeable variations in the same piece are not acceptable. Variations in appearance of other components are acceptable if they are within the range of approved Samples and are assembled or installed to minimize contrast.

2.6 ALUMINUM FINISHES

A. Clear Anodic Finish: Manufacturer's standard Class 1 clear anodic coating, 0.018 mm or thicker, over a satin (directionally textured) mechanical finish, complying with AAMA 611.

PART 3 - EXECUTION

3.1 EXAMINATION

A. Examine substrates, areas, and conditions, with Installer present, for compliance with requirements for installation tolerances and other conditions affecting performance of work.

B. Verify that items, including anchor inserts**,** are sized and located to accommodate signs.

C. Proceed with installation only after unsatisfactory conditions have been corrected.

3.2 INSTALLATION

A. Locate signs and accessories where indicated, using mounting methods of types described and complying with manufacturer's written instructions.

1. Install signs level, plumb, and at heights indicated, with sign surfaces free of distortion and other defects in appearance.
2. Interior Wall Signs: Install signs on walls adjacent to latch side of door where applicable. Where not indicated or possible, such as double doors, install signs on nearest adjacent walls. Locate to allow approach within 3 inches of sign without encountering protruding objects or standing within swing of door.
3. When required to mount to glass, provide matching material back plate.

B. Wall-Mounted Signs: Comply with sign manufacturer's written instructions except where more stringent requirements apply.

1. Two-Face Tape: Mount signs to smooth, nonporous surfaces. Do not use this method for vinyl-covered or rough surfaces.
2. Silicone-Adhesive Mounting: Attach signs to irregular, porous, or vinyl-covered surfaces.
3. Shim Plate Mounting: Provide 1/8-inch thick, concealed aluminum shim plates with predrilled and countersunk holes, at locations indicated, and where other mounting methods are not practicable. Attach plate with fasteners and anchors suitable for secure attachment to substrate. Attach panel signs to plate using method specified above.
4. Signs Mounted on Glass: Provide matching opaque plate on opposite side of glass to conceal mounting materials.

C. Dimensional Characters: Mount characters using standard fastening methods to comply with manufacturer's written instructions for character form, type of mounting, wall construction, and condition of exposure indicated. Provide heavy paper template to establish character spacing and to locate holes for fasteners.

1. Flush Mounting: Mount characters with backs in contact with wall surface.

3.3 CLEANING AND PROTECTION

A. After installation, clean soiled sign surfaces according to manufacturer's written instructions. Protect signs from damage until acceptance by Owner.

END OF SECTION 10 14 00

SECTION 10 14 26 - POST AND PANEL/PYLON SIGNAGE

PART 1 - GENERAL

1.1 RELATED DOCUMENTS

A. Drawings and general provisions of the Contract, including General and Supplementary Conditions and Division 01 Specification Sections, apply to this Section.

1.2 SUMMARY

A. Section Includes:

1. Non-illuminated post and panel signs.
2. Non-illuminated pylon signs.

B. Related Requirements:

1. Section 015000 "Temporary Facilities and Controls" for temporary Project identification signs and for temporary informational and directional signs.
2. Section 033000 "Cast-in-Place Concrete" for concrete foundations, concrete fill in postholes, and setting anchor bolts in concrete foundations for signs.

1.3 ACTION SUBMITTALS

A. Product Data: For each type of product.

B. Shop Drawings: For post and panel/pylon signage.
1. Show sign mounting heights, locations of supplementary supports to be provided by others, and accessories.
2. Show message list, typestyles, graphic elements, and layout for each sign at least half size.

C. Samples for Initial Selection: For each type of sign assembly, exposed component, and exposed finish.

D. Sign Schedule: Use same designations specified or indicated on Drawings or in a sign schedule.

1.4 CLOSEOUT SUBMITTALS

A. Maintenance Data: For signs to include in maintenance manuals.

1.5 FIELD CONDITIONS

A. Field Measurements: Verify locations of anchorage devices embedded in permanent construction by other installers by field measurements before fabrication, and indicate measurements on Shop Drawings.

1.6 WARRANTY

A. Special Warranty: Manufacturer agrees to repair or replace components of signs that fail in materials or workmanship within specified warranty period.

1. Failures include, but are not limited to, the following:

a. Deterioration of finishes beyond normal weathering.
b. Deterioration of embedded graphic image.
c. Separation or delamination of sheet materials and components.

2. Warranty Period: Five years from date of Substantial Completion.

PART 2 - PRODUCTS

2.1 PERFORMANCE REQUIREMENTS

A. Thermal Movements: For exterior signs, allow for thermal movements from ambient and surface temperature changes.

1. Temperature Change: 120 deg F (67 deg C), ambient; 180 deg F (100 deg C), material surfaces.

B. Accessibility Standard: Comply with applicable provisions in the U.S. Architectural & Transportation Barriers Compliance Board's ADA-ABA Accessibility Guidelines for Buildings and Facilities and ICC A117.1 for signs.

C. .

2.2 POST AND PANEL/PYLON SIGNS

A. Post and Panel Sign : Sign of single-panel configuration; with smooth, uniform surfaces and support assembly; with message and characters having uniform faces, sharp corners, and precisely formed lines and profiles; and as follows:

1. Indicated on Drawings**.**

2. Solid-Sheet Sign Panels: Aluminum sheet with finish specified in "Sign-Panel-Face Finish and Applied Graphics" Subparagraph below and as follows:

a. Thickness: Manufacturer's standard for size of sign, 0.125 inch (3.18 mm) minimum.
b. Surface-Applied Graphics: Applied vinyl film.

3. Text and Typeface: As indicated n the drawings

B. Pylon Sign Sign with smooth, uniform surfaces and support assembly; with message and characters having uniform faces, sharp corners, and precisely formed lines and profiles; and as follows:

1. Solid-Sheet Sign Panels Aluminum sheet with finish specified in "Sign-Panel-Face Finish and Applied Graphics" Subparagraph below and as follows:

a. Thickness: Manufacturer's standard for size of sign
b. Surface-Applied Graphics: Applied vinyl film.

2. Text and Typeface: Match existing campus standard.

2.3 MATERIALS

A. Aluminum Sheet and Plate: ASTM B 209 (ASTM B 209M), alloy and temper recommended by aluminum producer and finisher for type of use and finish indicated.

B. Vinyl Film: UV-resistant vinyl film of nominal thickness indicated, with pressure-sensitive, permanent adhesive on back; die cut to form characters or images as indicated and suitable for exterior applications.

2.4 ACCESSORIES

A. Fasteners and Anchors: Manufacturer's standard as required for secure anchorage of signage, noncorrosive and compatible with each material joined, and complying with the following:

1. Use concealed fasteners and anchors unless indicated to be exposed.
2. For exterior exposure, furnish stainless-steel devices unless otherwise indicated.
3. Exposed Metal-Fastener Components, General:

a. Fabricated from same basic metal and finish of fastened metal unless otherwise indicated.
b. Fastener Heads: For nonstructural connections, use flathead screws and bolts with tamper-resistant, one-way-head slots unless otherwise indicated.

4. Inserts: Furnish inserts to be set by other trades into concrete or masonry work.

B. Bituminous Paint: Cold-applied asphalt emulsion complying with ASTM D 1187.

C. Anchoring Materials:

1. Nonshrink, Nonmetallic Grout: Factory-packaged, nonstaining, noncorrosive, nongaseous grout complying with ASTM C 1107/C 1107M. Provide grout specifically recommended by manufacturer for interior and exterior applications.
2. Anchoring Cement: Factory-packaged, nonshrink, nonstaining, hydraulic-controlled expansion cement formulation for mixing with water at Project site to create pourable anchoring, patching, and grouting compound.

    a. Water-Resistant Product: At exterior locations, provide formulation that is resistant to erosion from water exposure without needing protection by a sealer or waterproof coating and that is recommended by manufacturer for exterior use.

2.5 FABRICATION

A. General: Provide manufacturer's standard sign assemblies according to requirements indicated.

1. Preassemble signs in the shop to greatest extent possible. Disassemble signs only as necessary for shipping and handling limitations. Clearly mark units for reassembly and installation, in locations concealed from view after final assembly.
2. Conceal fasteners and anchors unless indicated to be exposed; locate exposed fasteners where they will be inconspicuous.

B. Sign Message Panels: Construct sign-panel surfaces to be smooth and to remain flat under installed conditions within a tolerance of plus or minus 1/16 inch (1.5 mm) measured diagonally from corner to corner.

1. Increase panel thickness or reinforce with concealed stiffeners or backing materials as needed to produce surfaces without distortion, buckles, warp, or other surface deformations.

C. Post Fabrication: Fabricate posts designed to withstand wind pressure indicated for Project location and of lengths required for installation method indicated for each sign.

1. Steel Posts: Fabricate from minimum 0.120-inch- (3.05-mm-) thick steel tubing unless otherwise indicated. Include post caps, fillers, spacers where required for loading conditions, and related accessories required for complete installation.

    a. Hot-dip galvanize post assemblies after fabrication according to ASTM A 123/A 123M.

2. Direct Burial: Fabricate posts 36 inches (910 mm) longer than height of sign to permit direct burial or embedment in concrete foundations or concrete-filled postholes.

2.6 GENERAL FINISH REQUIREMENTS

A. Protect mechanical finishes on exposed surfaces from damage by applying a strippable, temporary protective covering before shipping.

B. Appearance of Finished Work: Noticeable variations in same piece are not acceptable. Variations in appearance of adjoining components are acceptable if they are within the range of approved Samples and are assembled or installed to minimize contrast.

C. Organic, Anodic, and Chemically Produced Finishes: Apply to formed metal after fabrication but before applying contrasting polished finishes on raised features unless otherwise indicated.

PART 3 - EXECUTION

3.1 EXAMINATION

A. Examine substrates, areas, and conditions, with Installer present, for compliance with requirements for installation tolerances and other conditions affecting performance of signage work.

B. Verify that sign-support surfaces are within tolerances to accommodate signs.

C. Verify that anchor inserts are correctly sized and located to accommodate signs.

D. Proceed with installation only after unsatisfactory conditions have been corrected.

3.2 INSTALLATION

A. General: Install signs using installation methods indicated and according to manufacturer's written instructions.

1. Install signs level, plumb, and at locations and heights indicated, with sign surfaces free of distortion and other defects in appearance.
2. Install signs so they do not protrude or obstruct according to accessibility standard.
3. Before installation, verify that sign components are clean and free of materials or debris that would impair installation.
4. Corrosion Protection: Coat concealed surfaces of exterior aluminum in contact with grout, concrete, masonry, wood, or dissimilar metals, with a heavy coat of bituminous paint.

3.3 INSTALLING POSTS

A. Vertical Tolerance: Set posts plumb within a tolerance of 1/16 inch in 3 feet (2 mm in 1 m).

B. Direct-Burial Method:

1. Excavation: Excavate posthole to dimensions indicated. Reconstruct subgrade that is not firm, undisturbed, or compacted soil, or that is damaged by freezing temperatures, frost, rain, accumulated water, or construction activities by excavating an additional 12 inches (300 mm), backfilling with satisfactory soil or well-graded aggregate, and compacting to original subgrade elevation.
2. Setting in Cast-in-Place Concrete: Set post in position, support to prevent movement, and place concrete in posthole for concrete foundation as indicated.

3.4 ADJUSTING AND CLEANING

A. Remove and replace damaged or deformed signs and signs that do not comply with specified requirements. Replace signs with damaged or deteriorated finishes or components that cannot be successfully repaired by finish touchup or similar minor repair procedures.

B. Remove temporary protective coverings and strippable films as signs are installed.

C. On completion of installation, clean exposed surfaces of signs according to manufacturer's written instructions, and touch up minor nicks and abrasions in finish. Maintain signs in a clean condition during construction and protect from damage until acceptance by Owner.

END OF SECTION 10 14 26

SECTION 10 21 13 - TOILET COMPARTMENTS

PART 1 - GENERAL

1.1 RELATED DOCUMENTS

A. Drawings and general provisions of the Contract, including General and Supplementary Conditions and Division 01 Specification Sections, apply to this Section.

1.2 SUMMARY

A. Section Includes:
   1. Steel toilet compartments configured as toilet enclosures and urinal screens.

B. Related Sections:
   1. Division 06 Section "Rough Carpentry" for blocking.
   2. Division 10 Section "Toilet, Bath, and Laundry Accessories" for toilet tissue dispensers, grab bars, purse shelves, and similar accessories.

1.3 SUBMITTALS

A. Product Data: For each type of product indicated. Include construction details, material descriptions, dimensions of individual components and profiles, and finishes.

B. Shop Drawings: For toilet compartments. Include plans, elevations, sections, details, and attachments to other work.
   1. Show locations of cutouts for compartment-mounted toilet accessories.
   2. Show locations of reinforcements for compartment-mounted grab bars.
   3. Show locations of centerlines of toilet fixtures.

C. Samples for Initial Selection: For each type of unit indicated. Include Samples of hardware and accessories involving material and color selection.

D. Maintenance Data: For toilet compartments to include in maintenance manuals.

1.4 QUALITY ASSURANCE

A. Comply with requirements in GSA's CID-A-A-60003, "Partitions, Toilets, Complete."

B. Regulatory Requirements: Comply with applicable provisions in the U.S. Architectural & Transportation Barriers Compliance Board's "Americans with Disabilities Act (ADA) and Architectural Barriers Act (ABA) Accessibility Guidelines for Buildings and Facilities" and ICC/ANSI A117.1 for toilet compartments designated as accessible.

1.5 PROJECT CONDITIONS

A. Field Measurements: Verify actual locations of toilet fixtures, walls, columns, ceilings, and other construction contiguous with toilet compartments by field measurements before fabrication.

PART 2 - PRODUCTS

2.1 MATERIALS

A. Steel Sheet: Commercial steel sheet for exposed applications; mill phosphatized and selected for smoothness.

1. Electrolytically Zinc Coated: ASTM A 879/A 879M, 01Z (03G).

B. Stainless-Steel Castings: ASTM A 743/A 743M.

2.2 STEEL UNITS

A. Manufacturers: Subject to compliance with requirements, provide products by one of the following:

B. Basis-of-Design Product: Subject to compliance with requirements, provide Metpar Corp Overhead Braced Floor Supported or comparable product by one of the following:

1. Accurate Partitions Corporation.
2. All American Metal Corp.
3. American Sanitary Partition Corporation.
4. Ampco, Inc.
5. Bradley Corporation; Mills Partitions.
6. Flush Metal Partition Corp.
7. General Partitions Mfg. Corp.
8. Global Steel Products Corp.
9. Hadrian Manufacturing Inc.
10. Knickerbocker Partition Corporation.
11. Metpar Corp.
12. Rockville Partitions Incorporated.
13. Sanymetal; a Crane Plumbing company.
14. Shanahan's Limited.

C. Toilet-Enclosure Style: Overhead braced.

D. Urinal-Screen Style: Wall hung, flat panel.

E. Door, Panel, and Pilaster Construction: Seamless, metal facing sheets pressure laminated to core material; with continuous, interlocking molding strip or lapped-and-formed edge closures; corners secured by welding or clips and exposed welds ground smooth. Provide with no-sightline system**.** Exposed surfaces shall be free of pitting, seam marks, roller marks, stains, discolorations, telegraphing of core material, or other imperfections.

1. Core Material: Manufacturer's standard sound-deadening honeycomb of resin-impregnated kraft paper in thickness required to provide finished thickness of 1 inch (25 mm) for doors and panels and 1-1/4 inches (32 mm) for pilasters.
2. Grab-Bar Reinforcement: Provide concealed internal reinforcement for grab bars mounted on units.
3. Tapping Reinforcement: Provide concealed reinforcement for tapping (threading) at locations where machine screws are used for attaching items to units.

F. Urinal-Screen Construction:

1. Flat-Panel Urinal Screen: Matching panel construction.
2. Integral-Flange, Wall-Hung Urinal Screen: Similar to panel construction, with integral full-height flanges for wall attachment, and maximum 1-1/4 inches (32 mm) thick.
3. Wedge-Shaped, Wall-Hung Urinal Screen: Similar to panels, V-shaped, fabricated for concealed wall attachment, and maximum 6 inches (152 mm) wide at wall and minimum 1 inch (25 mm) wide at protruding end.

G. Facing Sheets and Closures: Electrolytically coated or hot-dip galvanized-steel sheet with nominal base-metal (uncoated) thicknesses as follows:

1. Pilasters, Braced at Both Ends: Manufacturer's standard thickness, but not less than 0.036 inch (0.91 mm).
2. Panels: Manufacturer's standard thickness, but not less than 0.030 inch (0.76 mm).
3. Doors: Manufacturer's standard thickness, but not less than 0.030 inch (0.76 mm).
4. Flat-Panel Urinal Screens: Thickness matching the panels.

H. Pilaster Shoes and Sleeves (Caps): Stainless-steel sheet, not less than 0.031-inch (0.79-mm) nominal thickness and 3 inches (76 mm) high, finished to match hardware.

I. Brackets (Fittings):
1. Stirrup Type: Ear or U-brackets; stainless steel.
2. Full-Height (Continuous) Type: Manufacturer's standard design; stainless steel
   a. Provide full height (continuous) brackets at urinal screws.

J. Steel-Sheet Finish: Immediately after cleaning and pretreating, apply manufacturer's standard baked-on finish, including thermosetting, electrostatically applied, and powder coatings. Comply with coating manufacturer's written instructions for applying and baking. Apply two colors in each room.

1. Color: As selected by Architect from manufacturer's full range.
   a. Must be able to provide color available from Basis of Design: Metpar Corp.

2.3 ACCESSORIES

A. Hardware and Accessories: Manufacturer's standard design, heavy-duty operating hardware and accessories.

1. Material: Stainless steel.
2. Hinges: Manufacturer's standard continuous, cam type that swings to a closed or partially open position.
   a. Hinges at handicap stalls must close door as required by ADA.
3. Latch and Keeper: Manufacturer's standard surface-mounted latch unit designed for emergency access and with combination rubber-faced door strike and keeper. Provide units that comply with regulatory requirements for accessibility at compartments designated as accessible.
4. Coat Hook: Manufacturer's standard combination hook and rubber-tipped bumper, sized to prevent in-swinging door from hitting compartment-mounted accessories.
5. Door Bumper: Manufacturer's standard rubber-tipped bumper at out-swinging doors.
6. Door Pull: Manufacturer's standard unit at out-swinging doors that complies with regulatory requirements for accessibility. Provide units on both sides of doors at compartments designated as accessible.

B. Overhead Bracing: Manufacturer's standard continuous, extruded-aluminum head rail with antigrip profile and in manufacturer's standard finish.

C. Anchorages and Fasteners: Manufacturer's standard exposed fasteners of stainless steel or chrome-plated steel or brass, finished to match the items they are securing, with theft-resistant-type heads. Provide sex-type bolts for through-bolt applications. For concealed anchors, use stainless steel, hot-dip galvanized steel, or other rust-resistant, protective-coated steel.

2.4 FABRICATION

A. Overhead-Braced Units: Provide manufacturer's standard corrosion-resistant supports, leveling mechanism, and anchors at pilasters to suit floor conditions. Provide shoes at pilasters to conceal supports and leveling mechanism.

B. Door Size and Swings: Unless otherwise indicated, provide 24-inch- (610-mm-) wide, in-swinging doors for standard toilet compartments and 36-inch- (914-mm-) wide, out-swinging doors with a minimum 32-inch- (813-mm-) wide, clear opening for compartments designated as accessible.

PART 3 - EXECUTION

3.1 INSTALLATION

A. General: Comply with manufacturer's written installation instructions. Install units rigid, straight, level, and plumb. Secure units in position with manufacturer's recommended anchoring devices.

1. Maximum Clearances:
   a. Pilasters and Panels: 1/2 inch (13 mm).
   b. Panels and Walls: 1 inch (25 mm).

2. Stirrup Brackets: Secure panels to walls and to pilasters with no fewer than three brackets attached at midpoint and near top and bottom of panel.
   a. Locate wall brackets so holes for wall anchors occur in masonry or tile joints.
   b. Align brackets at pilasters with brackets at walls.

B. Overhead-Braced Units: Secure pilasters to floor and level, plumb, and tighten. Set pilasters with anchors penetrating not less than 1-3/4 inches (44 mm) into structural floor unless otherwise indicated in manufacturer's written instructions. Secure continuous head rail to each pilaster with no fewer than two fasteners. Hang doors to align tops of doors with tops of panels, and adjust so tops of doors are parallel with overhead brace when doors are in closed position.

C. Urinal Screens: Attach with anchoring devices to suit supporting structure. Set units level and plumb, rigid, and secured to resist lateral impact.
   1. Provide continuous blocking and continuous stainless steel bracket.

3.2 ADJUSTING

A. Hardware Adjustment: Adjust and lubricate hardware according to hardware manufacturer's written instructions for proper operation. Set hinges on in-swinging doors to hold doors open approximately 30 degrees from closed position when unlatched. Set hinges on out-swinging doors to return doors to fully closed position.

END OF SECTION 10 21 13

SECTION 10 28 00 - TOILET ACCESSORIES

PART 1 - GENERAL

1.1 RELATED DOCUMENTS

A. Drawings and general provisions of the Contract, including General and Supplementary Conditions and Division 01 Specification Sections, apply to this Section.

1.2 SUMMARY

A. Section Includes:

1. Washroom accessories
2. Custodial accessories.

B. Related Sections:

1. Division 06 Section "Rough Carpentry" for wood blocking for Toilet and Bath Accessories.
2. Division 022, Plumbing.

1.3 ACTION SUBMITTALS

A. Product Data: For each type of product indicated. Include the following:

1. Construction details and dimensions.
2. Anchoring and mounting requirements, including requirements for cutouts in other work and substrate preparation.
3. Material and finish descriptions.
4. Features that will be included for Project.
5. Manufacturer's warranty.

B. Samples: Full size, for each accessory item to verify design, operation, and finish requirements.

1. Approved full-size Samples will be returned and may be used in the Work.

C. Product Schedule: Indicating types, quantities, sizes, and installation locations by room of each accessory required.

1. Identify locations using room designations indicated.
2. Identify products using designations indicated.

1.4 INFORMATIONAL SUBMITTALS

A. Warranty: Sample of special warranty.

1.5 CLOSEOUT SUBMITTALS

A. Maintenance Data: For toilet and bath accessories to include in maintenance manuals.

1.6 QUALITY ASSURANCE

A. Source Limitations: For products listed together in the same Part 2 articles, obtain products from single source from single manufacturer.

1.7 WARRANTY

A. Special Mirror Warranty: Manufacturer's standard form in which manufacturer agrees to replace mirrors that develop visible silver spoilage defects and that fail in materials or workmanship within specified warranty period.

1. Warranty Period: 15 years from date of Substantial Completion.

PART 2 - PRODUCTS

2.1 MATERIALS

A. Stainless Steel: ASTM A 666, Type 304, 0.031-inch minimum nominal thickness unless otherwise indicated.

B. Brass: ASTM B 19, flat products; ASTM B 16/B 16M, rods, shapes, forgings, and flat products with finished edges; or ASTM B 30, castings.

C. Steel Sheet: ASTM A 1008/A 1008M, Designation CS (cold rolled, commercial steel), 0.036-inch minimum nominal thickness.

D. Galvanized-Steel Sheet: ASTM A 653/A 653M, with G60 (Z180) hot-dip zinc coating.

E. Galvanized-Steel Mounting Devices: ASTM A 153/A 153M, hot-dip galvanized after fabrication.

F. Fasteners: Screws, bolts, and other devices of same material as accessory unit and tamper-and-theft resistant where exposed, and of galvanized steel where concealed.

G. Chrome Plating: ASTM B 456, Service Condition Number SC 2 (moderate service).

H. Mirrors: ASTM C 1503, Mirror Glazing Quality, clear-glass mirrors, nominal 6.0 mm thick.

I. ABS Plastic: Acrylonitrile-butadiene-styrene resin formulation.

2.2 RESTROOM ACCESSORIES

A. Manufacturers: Subject to compliance with requirements, available manufacturers offering products that may be incorporated into the Work include, but are not limited to, the following:

1. American Specialties, Inc.- Basis of Design Products
2. Bobrick Washroom Equipment, Inc.
3. Bradley Corporation..
4. Approved Equals.

B. Toilet Tissue (Roll) Dispenser:

1. Owner furnished Contractor installed.
2. Confirm Model with Owner for required wall blocking.

C. Paper Towel Dispenser:

1. Owner furnished Contractor installed.
2. Confirm Model with Owner for required wall blocking

D. Soap Dispenser:

1. Owner Furnished Contractor Installed
2. Confirm Model with Owner for required wall blocking

E. Grab Bars Public and Private Use Restrooms:

1. Basis-of-Design Product: ASI 1-1/2” Series with Snap-on Covers.
2. Mounting: Flanges with concealed fasteners.
3. Material: Stainless steel, 0.05 inch thick.
   a. Finish: Smooth, No. 4 finish (satin).
4. Outside Diameter: 1-1/2 inches.
5. Configuration and Length: As indicated on Drawings.
   a. Include 18 inch vertical Grab Bars.

F. Mirror Unit Public and Private Use Restrooms:

1. Basis-of-Design Product: ASI Channel Frame Mirror.
2. Frame: Stainless-steel channel.
   a. Corners: Manufacturer's standard.
3. Hangers: Produce rigid, tamper- and theft-resistant installation, using method indicated below.
   a. Wall bracket of galvanized steel, equipped with concealed locking devices requiring a special tool to remove.
4. Size: 24” X 36”.

G. Sanitary Napkin Disposal :
1. Basis of Design Product: ASI Model 0473-A or equal
2. Stainless Steel

H. Mop Holder with Shelf:
1. Basis of Design Product: ASI Model 1315-3
2. Stainless Steel

2.3 CUSTODIAL ACCESSORIES

A. Manufacturers: Subject to compliance with requirements, available manufacturers offering products that may be incorporated into the Work include, but are not limited to, the following:
1. American Specialties, Inc.
2. Bobrick Washroom Equipment, Inc.
3. Bradley Corporation.
4. FRP – Marlite.
5. Approved equals.

B. Mop and Broom Holder:

1. Basis-of-Design Product: ASI Mop and Broom Holder Rack.
2. Length: 36 inches.
3. Mop/Broom Holders: Four, spring-loaded, rubber hat, cam type.
4. Material and Finish: Stainless steel, No. 4 finish (satin).

C. Wall Protection – Reinforced Fiberglass Panels

1. Basis of Design Product: Marlite FRP
2. Color: White
3. Accessories: Edge and Panel accessories as required.
4. Provide to 4’-0” high both sides of Mop Sink.

2.4 FABRICATION

A. General: Fabricate units with tight seams and joints, and exposed edges rolled. Hang doors and access panels with full-length, continuous hinges. Equip units for concealed anchorage and with corrosion-resistant backing plates.

B. Keys: Provide universal keys for internal access to accessories for servicing and resupplying. Provide minimum of six keys to Owner's representative.

PART 3 - EXECUTION

3.1 INSTALLATION

A. Install accessories according to manufacturers' written instructions, using fasteners appropriate to substrate indicated and recommended by unit manufacturer. Install units level, plumb, and firmly anchored in locations and at heights indicated.

B. Grab Bars: Install to withstand a downward load of at least 250 lbf, when tested according to ASTM F 446.

3.2 ADJUSTING AND CLEANING

A. Adjust accessories for unencumbered, smooth operation. Replace damaged or defective items.

B. Remove temporary labels and protective coatings.

C. Clean and polish exposed surfaces according to manufacturer's written recommendations.

END OF SECTION 10 28 00

SECTION 10 44 00 - FIRE PROTECTION SPECIALTIES

PART 1 - GENERAL

1.1 RELATED DOCUMENTS

A. Drawings and general provisions of the Contract, including General and Supplementary Conditions and Division 01 Specification Sections, apply to this Section.

1.2 RELATED WORK DESCRIBED ELSEWHERE

A. Division 09 Section “Gypsum Board”

1.3 DESCRIPTION OF WORK: Portable fire extinguishers include units which can be hand carried as opposed to those which are equipped with wheels or to fixed fire extinguishing systems, unless otherwise indicated. Types of products in this section include fire extinguishers and accessories, including fire extinguisher cabinets.

1.4 QUALITY ASSURANCE

A. Provide portable fire extinguishers and accessories by one manufacturer.

B. Portable Fire Extinguisher Standards: Provide new portable fire extinguishers which comply with applicable UL standards and are labeled by UL. Comply with NFPA 10.

1.5 SUBMITTALS: Submit manufacturer's technical data and installation instructions for all portable fire extinguishers required. For fire extinguisher cabinets include roughing-in dimensions and details showing mounting methods, relationships to surrounding construction, door hardware, cabinet type and materials, trim style and door construction, style and materials. Where color selections are required, include color charts showing full range of the manufacturer's standard colors and designs available.

PART 2 - PRODUCTS

2.1 FIRE EXTINGUISHERS

A. General: Provide fire extinguishers for each extinguisher cabinet, and for other locations indicated, in the colors and finishes selected by the Architect.

B. Multi-Purpose Dry Chemical Type: UL-rated, 4A-80B;C, 10 lb. nominal capacity, in enameled container, for Class A, B and C fires.

2.2 FIRE EXTINGUISHER CABINET, GENERAL: Provide fire extinguisher cabinets where indicated of suitable size for housing fire extinguisher of types and capacities indicated. Provide Larsen's Architectural Series, No. 2409-6R with Vertical Duo Door or equal.

1. Construction: Standard enameled steel box. Weld all joints and grind smooth. Miter and weld perimeter door frames.

2. Cabinet Type: Suitable for semi recessed installation. Final trim must not project more than 4" from the wall face.

a. Provide rated cabinets at 1-hour wall installation.

3. Trim Style: One piece with corners mitered, welded, and ground smooth. Rolled edge with 2-1/2" back bend enameled steel.

4. Door Style: Coordinated with cabinet and trim styles. Glass panel of 1/8" float glass. Door material enameled steel.

5. Door Hardware: Either lever handle with cam latch or door pull and friction latch. Provide concealed or continuous type hinge permitting door to open 180 degrees.

2.4 MANUFACTURERS: Subject to compliance with requirements, manufacturers offering products that may be incorporated into the work include, but are not limited to, the following:

J. L. Industries
Larsen's
Potter-Roemer, Inc.

PART 3 - EXECUTION

3.1 GENERAL: Prepare recesses in walls for fire extinguisher cabinets as required by type and size of cabinet and style of trim and to comply with manufacturer's instructions. Securely fasten fire extinguisher cabinets to structure, square and plumb, to comply with the manufacturer's instructions. Install only after final wall finishes and coverings are installed.

When installing recessed cabinets in fire rated walls, maintain the required rating at all five sides of the cabinet.

END OF SECTION

SECTION 10 51 13 - METAL LOCKERS

PART 1 - GENERAL

1.1 RELATED DOCUMENTS

A. Drawings and general provisions of the Contract, including General and Supplementary Conditions and Division 01 Specification Sections, apply to this Section.

1.2 SUMMARY

A. Section Includes:
   1. Welded double tier Corridor lockers with continuous zee base and sloping tops.
      a. 15” x 15” x 72”

1.3 ACTION SUBMITTALS

A. Product Data: For each type of metal locker.

   1. Include construction details, material descriptions, dimensions of individual components and profiles, and finishes for each type of metal locker and bench.

B. Shop Drawings: For metal lockers.

   1. Include plans, elevations, sections, details, and attachments to other work.
   2. Show locker trim and accessories.
   3. Include locker identification system and numbering sequence.

C. Samples: For each color specified, in manufacturer's standard size.

D. Samples for Initial Selection: Manufacturer's color charts showing the full range of colors available.

E. Samples for Verification: For the following products, in manufacturer's standard size:

   1. Lockers and equipment.

1.4 INFORMATIONAL SUBMITTALS

A. Qualification Data: For Installer.

B. Sample Warranty: For special warranty.

1.5 CLOSEOUT SUBMITTALS

A. Maintenance Data: For adjusting, repairing, and replacing locker doors and latching mechanisms to include in maintenance manuals.

1.6 MAINTENANCE MATERIAL SUBMITTALS

A. Furnish extra materials that match products installed and that are packaged with protective covering for storage and identified with labels describing contents.

1. Full-size units of the following metal locker hardware items equal to **10** units:
   a. Hooks.

1.7 DELIVERY, STORAGE, AND HANDLING

A. Do not deliver metal lockers until spaces to receive them are clean, dry, and ready for their installation.

1.8 FIELD CONDITIONS

A. Field Measurements: Verify actual dimensions of recessed openings by field measurements before fabrication.

1.9 COORDINATION

A. Coordinate sizes and locations of framing, blocking, furring, reinforcements, and other related units of work specified in other Sections to ensure that metal lockers can be supported and installed as indicated.

1.10 WARRANTY

A. Special Warranty: Manufacturer agrees to repair or replace components of metal lockers that fail in materials or workmanship, excluding finish, within specified warranty period.

1. Failures include, but are not limited to, the following:

   a. Structural failures.
   b. Faulty operation of latches and other door hardware.

2. Damage from deliberate destruction and vandalism is excluded.
3. Warranty Period for Welded Metal Lockers: 10 years from date of Substantial Completion.

PART 2 - PRODUCTS

2.1 MANUFACTURERS

A. Source Limitations: Obtain metal lockers**,** and accessories from single source from single locker manufacturer.

2.2 PERFORMANCE REQUIREMENTS

A. Accessibility Requirements: For lockers indicated to be accessible, comply with applicable provisions in ICC A117.1.

2.3 WELDED CORRIDOR LOCKERS

A. Doors: One piece; fabricated from 0.075-inch (1.90-mm) nominal-thickness steel sheet; formed into channel shape with double bend at vertical edges and with right-angle single bend at horizontal edges.

1. Reinforcement: Manufacturer's standard reinforcing angles, channels, or stiffeners for doors more than 15 inches (381 mm) wide; welded to inner face of doors.
2. Door Style: Vented panel as follows:

a. Louvered Vents: No fewer than six louver openings at top and bottom for double-tier lockers.

B. Body: Assembled by welding body components together. Fabricate from unperforated steel sheet with thicknesses as follows:

1. Tops, Bottoms, and Sides: 0.060-inch (1.52-mm) nominal thickness.
2. Backs: 0.048-inch (1.21-mm) nominal thickness.
3. Shelves: 0.060-inch (1.52-mm) nominal thickness, with double bend at front and single bend at sides and back.

C. Frames: Channel formed; fabricated from 0.060-inch (1.52-mm) nominal-thickness steel sheet; lapped and factory welded at corners; with top and bottom main frames factory welded into vertical main frames. Form continuous, integral, full-height door strikes on vertical main frames.

D. Hinges: Welded to door and attached to door frame with no fewer than two factory-installed rivets per hinge that are completely concealed and tamper resistant when door is closed; fabricated to swing 180 degrees.

1. Knuckle Hinges: Steel, full loop, five or seven knuckles, tight pin; minimum 2 inches (51 mm) high. Provide no fewer than three hinges for each door more than 42 inches (1067 mm) high.

E. Projecting Door Handle and Latch: Finger-lift latch control designed for use with padlocks; positive automatic latching, chromium plated; pry and vandal resistant.

1. Latch Hooks: Equip doors 48 inches (1219 mm) and higher with three latch hooks and doors less than 48 inches (1219 mm) high with two latch hooks; fabricated from 0.105-inch (2.66-mm) nominal-thickness steel sheet; welded or riveted to full-height door strikes; with resilient silencer on each latch hook.
2. Latching Mechanism: Manufacturer's standard, rattle-free latching mechanism and moving components isolated to prevent metal-to-metal contact, and incorporating a pre-locking device that allows locker door to be locked while door is open and then closed without unlocking or damaging lock or latching mechanism.

F. Locks: Combination padlocks User provided.

G. Identification Plates: Manufacturer's standard, etched, embossed, or stamped aluminum plates, with numbers and letters at least 3/8 inch (9 mm) high.

H. Hooks: Manufacturer's standard ball-pointed type, aluminum or steel; zinc plated.

I. Coat Rods: Manufacturer's standard.

J. Continuous Zee Base: Fabricated from, manufacturer's standard thickness, but not less than 0.060-inch (1.52-mm) nominal-thickness steel sheet.

1. Height: 4 inches (102 mm).

K. Continuous Sloping Tops: Fabricated from 0.048-inch (1.21-mm) nominal-thickness steel sheet, with a pitch of approximately 20 degrees.

1. Closures: Vertical-end type.

L. Filler Panels: Fabricated from 0.048-inch (1.21-mm) nominal-thickness steel sheet.

M. Materials:
1. Metallic-Coated Steel Sheet: ASTM A 653/A 653M, Commercial Steel (CS), Type B; with A60 (ZF180) zinc-iron, alloy (galvannealed) coating designation.

N. Finish: Baked enamel or powder coat.

1. Color: As selected by Architect from manufacturer's full range.

2.4 FABRICATION

A. Fabricate metal lockers square, rigid, without warp, and with metal faces flat and free of dents or distortion. Make exposed metal edges safe to touch and free of sharp edges and burrs.

1. Form body panels, doors, shelves, and accessories from one-piece steel sheet unless otherwise indicated.
2. Provide fasteners, filler plates, supports, clips, and closures as required for complete installation.

B. Fabricate each metal locker with an individual door and frame; individual top, bottom, and back; and common intermediate uprights separating compartments. Factory weld frame members of each metal locker together to form a rigid, one-piece assembly.

C. Equipment: Provide each locker with an identification plate and the following equipment:
   1. Double-Tier Units: One double-prong ceiling hook and two single-prong wall hooks.

D. Welded Construction: Factory preassemble metal lockers by welding all joints, seams, and connections; with no bolts, nuts, screws, or rivets used in assembly of main locker groups. Factory weld main locker groups into one-piece structures. Grind exposed welds flush.

E. Accessible Lockers: Fabricate as follows:

   1. Locate bottom shelf no lower than 15 inches (381 mm) above the floor.
   2. Where hooks, coat rods, or additional shelves are provided, locate no higher than 48 inches (1219 mm) above the floor.

F. Continuous Base: Formed into channel or zee profile for stiffness, and fabricated in lengths as long as practical to enclose base and base ends of metal lockers; finished to match lockers.

G. Continuous Sloping Tops: Fabricated in lengths as long as practical, without visible fasteners at splice locations; finished to match lockers.

   1. Sloping-top corner fillers, mitered.

H. Individual Sloping Tops: Fabricated in width to fit one locker frame in lieu of flat locker tops; with integral back; finished to match lockers. Provide wedge-shaped divider panels between lockers.

I. Recess Trim: Fabricated with minimum 2-1/2-inch (64-mm) face width and in lengths as long as practical; finished to match lockers.

J. Filler Panels: Fabricated in an unequal leg angle shape; finished to match lockers. Provide slip-joint filler angle formed to receive filler panel.

K. Boxed End Panels: Fabricated with 1-inch- (25-mm-) wide edge dimension, and designed for concealing fasteners and holes at exposed ends of nonrecessed metal lockers; finished to match lockers.

L. Finished End Panels: Designed for concealing unused penetrations and fasteners, except for perimeter fasteners, at exposed ends of nonrecessed metal lockers; finished to match lockers.

   1. Provide one-piece panels for double-row (back-to-back) locker ends.

M. Center Dividers: Full-depth, vertical partitions between bottom and shelf; finished to match lockers.

2.5 ACCESSORIES

A. Fasteners: Zinc- or nickel-plated steel, slotless-type, exposed bolt heads; with self-locking nuts or lock washers for nuts on moving parts.

B. Anchors: Material, type, and size required for secure anchorage to each substrate.

1. Provide nonferrous-metal or hot-dip galvanized anchors and inserts on inside face of exterior walls**,** and elsewhere as indicated**,** for corrosion resistance.
2. Provide toothed-steel or lead expansion sleeves for drilled-in-place anchors.

PART 3 - EXECUTION

3.1 EXAMINATION

A. Examine walls, floors, and support bases, with Installer present, for compliance with requirements for installation tolerances and other conditions affecting performance of the Work.

B. Prepare written report, endorsed by Installer, listing conditions detrimental to performance of the Work.

C. Proceed with installation only after unsatisfactory conditions have been corrected.

3.2 INSTALLATION

A. General: Install lockers level, plumb, and true; shim as required, using concealed shims.

1. Anchor locker runs at ends and at intervals recommended by manufacturer, but not more than 36 inches (910 mm) o.c. Using concealed fasteners, install anchors through backup reinforcing plates, channels, or blocking as required to prevent metal distortion.
2. Anchor single rows of metal lockers to walls near top and bottom of lockers.

B. Welded Lockers: Connect groups together with standard fasteners, with no exposed fasteners on face frames.

C. Equipment:

1. Attach hooks with at least two fasteners.
2. Attach door locks on doors using security-type fasteners.
3. Identification Plates: Identify metal lockers with identification indicated on Drawings.

   a. Attach plates to each locker door, near top, centered, with at least two aluminum rivets.

D. Trim: Fit exposed connections of trim, fillers, and closures accurately together to form tight, hairline joints, with concealed fasteners and splice plates.

1. Attach recess trim to recessed metal lockers with concealed clips.
2. Attach filler panels with concealed fasteners. Locate filler panels where indicated on Drawings.
3. Attach sloping-top units to metal lockers, with closures at exposed ends.
4. Attach boxed end panels using concealed fasteners to conceal exposed ends of nonrecessed metal lockers.
5. Attach finished end panels using fasteners only at perimeter to conceal exposed ends of nonrecessed metal lockers.

3.3 ADJUSTING

A. Clean, lubricate, and adjust hardware. Adjust doors and latches to operate easily without binding.

3.4 PROTECTION

A. Protect metal lockers from damage, abuse, dust, dirt, stain, or paint. Do not permit use during construction.

B. Touch up marred finishes, or replace metal lockers that cannot be restored to factory-finished appearance. Use only materials and procedures recommended or furnished by locker manufacturer.

END OF SECTION 10 51 13

SECTION 12 21 13 - HORIZONTAL LOUVER BLINDS

PART 1 - GENERAL

1.1 RELATED DOCUMENTS

A. Drawings and general provisions of the Contract, including General and Supplementary Conditions and Division 01 Specification Sections, apply to this Section.

1.2 RELATED WORK DESCRIBED ELSEWHERE

A. Division 08 Section "Aluminum-Framed Entrances and Storefronts".
B. Division 09 Section "Gypsum Board".

1.3 WORK INCLUDED: Extent of window treatment is indicated in schedules. Types of window treatment work in this section include: Horizontal blinds, mounted at vertical window frames.

1.4 QUALITY ASSURANCE

A. Provide window treatment units which are complete assemblies produced by one manufacturer for each type required, including hardware, accessory items, mounting brackets, and fastenings, etc.

B. Provide materials in solid color as selected by Architect from manufacturer's full range of standard colors.

C. Horizontal Blind Manufacturers: Subject to requirements, provide products by one of the following or approved equal.

1. Levolor A Division of Newell Rubbermaid; Mark 1-1" with Light Master Option.
2. Springs Window Fashions; Bali 1" Light Blocker with Privacy Slat Option.
3. Approved Equals.

1.5 SUBMITTALS:

A. Submit manufacturer's specifications and installation instructions for each type of window treatment required. Include methods of installation for each type. Submit manufacturer's full range of standard colors for Architect's selection.

PART 2 - PRODUCTS

2.1 HORIZONTAL BLINDS

A. Head Rails: Manufacturer's standard headrail consisting of channel-shaped section fabricated from minimum 0.025" thick sheet steel with rolled edges at top. Increase metal thickness as recommended by manufacturer for large blind units. Furnish complete with tilting mechanism, top and end braces, top cradles, cork lock, and accessory items required for type of blind and installation indicated. Finish to match slats.

B. Bottom Rail: Manufacturer's standard tubular steel bottom rail, designed to withstand twisting or sagging. Contour top surface to match slat curvature, with flat or slightly curved bottom. Close ends with manufacturer's standard metal or plastic end caps, or same color as rail. Finish rail in same color as slats.

C. Slats: Manufacturer's standard, spring-tempered aluminum slats, 0.008" thick (louver blades), with rounded corners and forming burrs removed, as follows: slat width, 1 inch narrow slats, with other components sized to suit.

D. Ladders: Manufacturer's standard ladder construction designed to support and maintain slats at proper spacing and alignment in open and closed positions as follows. Braided polyester cord design consisting of vertical components of not less than 0.045" nor more than 0.066" in diameter and integrally braided ladder rungs of not less than four threads; space ladders not further than 21" apart and 7" from ends of slats.

1. Provide with light control option.

E. Tilting Mechanism: Manufacturer's standard assembly including low friction gear tilter, drum and cradle at each ladder, tilt rod, tape, clips, and grommet guides to prevent wear on ladder and cords; all designed to hold slats at any angle and prevent movement of slats due to vibration.

F. Wand Operation: Manufacturer's standard, detachable clear plastic wand, or proper length to suit blind installation and to provide convenient operation.

G. Lifting Mechanism: Manufacturer's standard including crash proof cord locks with cord separators and braid polyester or nylon lift cords with tassels at ends. Size cord to suit blind type. Include cord equalizers of self aligning type designed to maintain horizontal blind position.

H. Installation Brackets: Manufacturer's brackets for indicated installation conditions. Provide intermediate brackets at spacing recommended by blind manufacturer. Include all hardware necessary for secure attachment of brackets to adjoining construction and to head rails. Design brackets to support safely the weight of the blind assemblies plus forces applied to operate blinds.

I. Finish: Provide finishes indicated below. Finish exposed accessories and hardware to match rail color. Provide manufacturer's standard corrosion resistant finish to concealed items of hardware.

1. Steel Components: Galvanized and either phosphate coat or prime exposed steel surfaces, followed by manufacturer's standard baked on synthetic resin enamel finish.
2. Aluminum Slats: Provide manufacturer's standard factory applied finish system consisting of chemical conversion coating followed by baked on synthetic resin enamel finish coat.

2.2 HORIZONTAL BLIND FABRICATION AND OPERATION

A. Prior to fabrication, verify actual opening dimensions by accurate site measurements. Adjust dimensions for proper fit at all openings. Cooperate with other trades for securing tracks to substrates and other finished surfaces.

B. Fabricate window treatment components from non-corrosive, non-staining, non-fading materials which are completely compatible with each other, and which do not require lubrication during normal expected life.

C. Fabricate blind units to completely cover openings, from head to sill and jamb to jamb.

D. For continuous window wall installations, fabricate blinds so that ends occur only over mullions or other defined vertical separation, unless otherwise indicated.

E. Space supporting ladders to comply with manufacturer's standards, unless otherwise indicated.

F. Space slats to provide overlap for light exclusion when in fully closed position.

G. Equip horizontal blind units, unless otherwise indicated for the following operation.

1. Full tilting operation with slats rotating approximately 180 degrees. Place tilt operating controls on left hand side of blind units.
2. Full height raising, to manufacturer's minimum stacking dimension, with lifting cord locks for stopping blind at any point of ascending or descending travel. Place pull cords on right hand side of blind units.

PART 3 - EXECUTION

3.1 INSTALLATION

A. Install window treatment units in manner indicated to comply with manufacturer's instructions. Position units level, plumb, secure, at proper height and location relative to adjoining window units and other related work. Securely anchor units with proper clips, brackets, anchorages, suited to type of mounting indicated.

B. Provide adequate clearance between sash and blinds to permit unencumbered operation of sash hardware.

C. Divisions between blinds are permitted only at mullions by continuous windows or openings where ore than one blind for one opening occurs, unless otherwise indicated.

D. Isolate metal parts to prevent galvanic action. Use tape or thick coating or other means approved by Architect and window treatment unit manufacturer to effect separation.

E. Protect installed units to ensure their being in perfect operating condition, without damage, blemishes, or indication of use at completion of project. Repair or replace damaged units as directed by Architect.

END OF SECTION 12 21 13

SECTION 12 48 13 - ENTRANCE MATS

PART 1 - GENERAL

1.1 RELATED WORK DESCRIBED ELSEWHERE

A. Cast in Place Concrete: Section 03 30 00
B. Resilient Flooring: Section 09 65 19

1.2 DESCRIPTION OF WORK: Types of work in this section include mats and recessed mat frames.

1.3 QUALITY ASSURANCE

A. Manufacturer: Subject to compliance with requirements, furnish entrance mats and accessories as manufactured by the following or equal.

1. R. C. Munson Rubber Company
2. Approved Equals.

B. In addition to the requirements of these specifications, comply with manufacturer's instructions and recommendations for preparation of substrate, installation of the frames and anchors, and application of entrance mats.

C. Provide colors of material for entrance mats as shown on drawings or, if not shown, as selected by Architect from manufacturer's standard colors and patterns.
1. Provide 12" X 12" tile type units, TT-12 Fluff Cord Strip tile by R.C. Munson Rubber Company or Equal.

D. Field Measurements: Take field measurements prior to the preparation of shop drawings, if any, and fabrication, where possible, to ensure proper fitting of work. However, do not delay job progress; allow for trimming and fitting wherever taking of field measurements before fabrication might delay work.

E. Shop Assembly: Preassemble mat frames and mats in shop to ensure proper fit of mat to frame and of frame joinery. Disassemble frame to extent necessary for shipping and job handling limitations. Clearly mark units for reassembly and coordinated installation.

1.4 SUBMITTALS

A. Submit in compliance with Section 013300.

B. Product Data: Submit manufacturer's specifications and installation instructions for each type of entrance mat. Include methods of installation for each type of substrate to receive frames.

C. Samples: Submit samples for each type and color of entrance mat, frames and accessories required. Provide 12" square samples of mat materials and 12" lengths of frame members.
D. Shop Drawings: Submit shop drawings for entrance mats. Include full scale sections of typical installations. Show details of patterns or designs, anchors and accessories.

1.5 JOB CONDITIONS

A. Coordinate recessed mat frame installation with other work to ensure that mat frame or recess for frame is at proper elevation and location as indicated or required to fit properly to adjoining related work and that anchorage devices for frame are or can be securely attached. Furnish setting drawings, templates, and instructions for installation of frame and anchorage devices. Coordinate delivery with other work to avoid delay.
   1. Top of mat to flush with adjacent flooring.

B. Protect mat frame from damage of any kind during construction period by providing temporary cover of material.

PART 2 - PRODUCTS

2.1 MAT FRAMES: Manufacturer's standard design of size and style to suit mat type and adjacent finish floor or wall construction, for permanent recessed installation in concrete subfloor. Furnish complete with corner pins or reinforcing and installation anchorages.

A. Provide frame of aluminum alloy. Supply frames for mounting in Concrete, adjacent to sealed concrete flooring.

B. Provide frame members in single lengths, sized to accommodate mat size as specified.

2.2 FLOOR MATS: Edge grain laminated and chenille buffed rubber tire wall cuts bonded to sheet rubber or other durable flexible backing sheet to form single piece mats 3/8" to 7/16" thick.

2.3 ADHESIVE: As recommended by floor mat manufacturer.

2.4 FABRICATION

A. Fabricate mat frames to sizes indicated, verified by field measurement and coordinated with related, adjoining work. Miter frame corners to produce tight fitting hairline joints.

B. Fabricate mats in one piece unless otherwise indicated to closely fit mat frames; or where mat areas exceed maximum sizes manufactured, in equal sized sections of sizes indicated, as recommended by manufacturer for ease of handling.

PART 3 - EXECUTION

3.1 INSTALLATION

A. Install recessed frames and entrance mat to comply with manufacturer's instructions, at locations indicated and with top of frames and mats in proper relationship to one another and to adjoining finished flooring. Set mat tops at proper height for most effective cleaning action; coordinate top of mat surfaces with doors that swing across mats to provide adequate under door clearance.

END OF SECTION

SECTION 13 34 19 - METAL BUILDING SYSTEMS

PART 1 - GENERAL

1.1 RELATED DOCUMENTS

A. Drawings and general provisions of the Contract, including General and Supplementary Conditions and Division 01 Specification Sections, apply to this Section.

1.2 SUMMARY

A. Section Includes:

1. Structural-steel framing.
2. Faced Thermal insulation, for use at Workshop area.
3. Accessories.

B. Related Requirements:
1. Division 05 Section “Metal Decking” to be placed on Metal Building structure.
2. Division 05 Section ‘Cold Formed Metal Framing” for zee furring attached to wind girts for attachment of exterior metal panels.
3. Division 07 Section “Thermal Insulation” for insulation placed in concealed wind girt voids.
4. Division 07 Section “Metal Wall Panels”
5. Division 08 Section "Overhead Coiling Doors" for coiling vehicular doors in metal building systems.

1.3 DEFINITIONS

A. Terminology Standard: See MBMA's "Metal Building Systems Manual" for definitions of terms for metal building system construction not otherwise defined in this Section or in standards referenced by this Section.

1.4 COORDINATION

A. Coordinate sizes and locations of concrete foundations and casting of anchor-rod inserts into foundation walls and footings. Anchor rod installation, concrete, reinforcement, and formwork requirements are specified in Section 033000 "Cast-in-Place Concrete."

B. Coordinate metal panel assemblies with rain drainage work, flashing, trim, and construction of supports and other adjoining work to provide a leakproof, secure, and noncorrosive installation.

1.5 ACTION SUBMITTALS

A. Product Data: For each type of metal building system component.

1. Include construction details, material descriptions, dimensions of individual components and profiles, and finishes for the following:
   a. Metal wall panels.
   b. Thermal insulation and vapor-retarder facings.

B. Shop Drawings: Indicate components by others. Include full building plan, elevations, sections, details and the following:

1. Anchor-Rod Plans: Submit anchor-rod plans and templates before foundation work begins. Include location, diameter, and minimum required projection of anchor rods required to attach metal building to foundation. Indicate column reactions at each location.
2. Structural-Framing Drawings: Show complete fabrication of primary and secondary framing; include provisions for openings. Indicate welds and bolted connections, distinguishing between shop and field applications. Include transverse cross-sections.

   a. Show provisions for attaching roof curbs and service walkways.

C. Delegated-Design Submittal: For metal building systems.

1. Include analysis data indicating compliance with performance requirements and design data signed and sealed by the qualified professional engineer registered in New Mexico responsible for their preparation.

1.6 INFORMATIONAL SUBMITTALS

A. Qualification Data: For erector.

B. Welding certificates.

C. Letter of Design Certification: Signed and sealed by a qualified professional engineer. Include the following:

1. Name and location of Project.
2. Order number.
3. Name of manufacturer.
4. Name of Contractor.
5. Building dimensions including width, length, height, and roof slope.
6. Indicate compliance with AISC standards for hot-rolled steel and AISI standards for cold-rolled steel, including edition dates of each standard.
7. Governing building code and year of edition.

8. Design Loads: Include dead load, roof live load, collateral loads, roof snow load, deflection, wind loads/speeds and exposure, seismic design category or effective peak velocity-related acceleration/peak acceleration, and auxiliary loads (cranes).
9. Load Combinations: Indicate that loads were applied acting simultaneously with concentrated loads, according to governing building code.
10. Building-Use Category: Indicate category of building use and its effect on load importance factors.

D. Erector Certificates: For qualified erector, from manufacturer.

E. Material Test Reports: For each of the following products:

1. Structural steel including chemical and physical properties.
2. Bolts, nuts, and washers including mechanical properties and chemical analysis.
3. Tension-control, high-strength, bolt-nut-washer assemblies.
4. Shop primers.
5. Nonshrink grout.

F. Source quality-control reports.

G. Field quality-control reports.

H. Surveys: Show final elevations and locations of major members. Indicate discrepancies between actual installation and the Contract Documents. Have surveyor who performed surveys certify their accuracy.

I. Sample Warranties: For special warranties.

1.7 QUALITY ASSURANCE

A. Manufacturer Qualifications: A qualified manufacturer.

1. Accreditation: Manufacturer's facility accredited according to the International Accreditation Service's AC472, "Accreditation Criteria for Inspection Programs for Manufacturers of Metal Building Systems."
2. Engineering Responsibility: Preparation of comprehensive engineering analysis and Shop Drawings by a professional engineer who is legally qualified to practice in jurisdiction where Project is located.

B. Erector Qualifications: An experienced erector who specializes in erecting and installing work similar in material, design, and extent to that indicated for this Project and who is acceptable to manufacturer.

C. Welding Qualifications: Qualify procedures and personnel according to the following:

1. AWS D1.1/D1.1M, "Structural Welding Code - Steel."

2. AWS D1.3, "Structural Welding Code - Sheet Steel."

1.8 DELIVERY, STORAGE, AND HANDLING

A. Deliver components, sheets, panels, and other manufactured items so as not to be damaged or deformed. Package metal panels for protection during transportation and handling.

B. Unload, store, and erect metal panels in a manner to prevent bending, warping, twisting, and surface damage.

C. Protect foam-plastic insulation as follows:

1. Do not expose to sunlight, except to extent necessary for period of installation and concealment.
2. Protect against ignition at all times. Do not deliver foam-plastic insulation materials to Project site before installation time.
3. Complete installation and concealment of foam-plastic materials as rapidly as possible in each area of construction.

1.9 FIELD CONDITIONS

A. Weather Limitations: Proceed with panel installation only when weather conditions permit metal panels to be installed according to manufacturers' written instructions and warranty requirements.

PART 2 - PRODUCTS

2.1 MANUFACTURERS

A. Source Limitations: Obtain metal building system components, including primary and secondary framing and metal panel assemblies, from single source from single manufacturer.

2.2 SYSTEM DESCRIPTION

A. Provide a complete, integrated set of mutually dependent components and assemblies that form a metal building system capable of withstanding structural and other loads, thermally induced movement, and exposure to weather without failure or infiltration of water into building interior.

B. Primary-Frame Type:

1. Rigid Clear Span: Solid-member, structural-framing system without interior columns.

C. End-Wall Framing: Manufacturer's standard, for buildings not required to be expandable, consisting of primary frame, capable of supporting one-half of a bay design load, and end-wall columns.

D. Secondary-Frame Type: Manufacturer's standard purlins and joists and exterior-framed (bypass)] girts.

E. Eave Height: Varies – see drawings.

F. Bay Spacing: 22 feet – see drawings

G. Roof Slope: 1/4 inch per 12 inches (1:48)

H. Roof System: See drawings

I. Exterior Wall System: As specified in Division 07 Section ”Metal Wall Panels”.

2.3 PERFORMANCE REQUIREMENTS

A. Delegated Design: Engage a qualified professional engineer registered in New Mexico, as defined in Section 014000 "Quality Requirements," to design metal building system.

B. Structural Performance: Metal building systems shall withstand the effects of gravity loads and the following loads and stresses within limits and under conditions indicated according to procedures in MBMA's "Metal Building Systems Manual."

1. Design Loads: As indicated on Drawings – see Structural.
2. Deflection and Drift Limits: Design metal building system assemblies to withstand serviceability design loads without exceeding deflections and drift limits recommended in AISC Steel Design Guide No. 3 "Serviceability Design Considerations for Steel Buildings."
3. Deflection and Drift Limits: No greater than the following:

    a. Purlins and Rafters: Vertical deflection of 1/240 of the span.
    b. Girts: Horizontal deflection of 1/180 of the span.
    c. Design secondary-framing system to accommodate deflection of primary framing and construction tolerances, and to maintain clearances at openings.
    d. Lateral Drift: Maximum of 1/200 of the building height.

C. Seismic Performance: Metal building system shall withstand the effects of earthquake motions determined according to ASCE/SEI 7.

D. Thermal Movements: Allow for thermal movements from ambient and surface temperature changes by preventing buckling, opening of joints, overstressing of components, failure of joint sealants, failure of connections, and other detrimental effects. Base calculations on surface temperatures of materials due to both solar heat gain and nighttime-sky heat loss.

1. Temperature Change: 120 deg F (67 deg C), ambient.

2.4 STRUCTURAL-STEEL FRAMING

A. Recycled Content of Steel Products: Postconsumer recycled content plus one-half of pre-consumer recycled content not less than [**25**] percent.

B. Structural Steel: Comply with AISC 360, "Specification for Structural Steel Buildings."

C. Bolted Connections: Comply with RCSC's "Specification for Structural Joints Using High-Strength Bolts."

D. Cold-Formed Steel: Comply with AISI's "North American Specification for the Design of Cold-Formed Steel Structural Members" for design requirements and allowable stresses.

E. Primary Framing: Manufacturer's standard primary-framing system, designed to withstand required loads and specified requirements. Primary framing includes transverse and lean-to frames; rafters, rake, and canopy beams; sidewall, intermediate, end-wall, and corner columns; and wind bracing.

1. General: Provide frames with attachment plates, bearing plates, and splice members. Factory drill for field-bolted assembly. Provide frame span and spacing indicated.

a. Slight variations in span and spacing may be acceptable if necessary to comply with manufacturer's standard, as approved by Architect.

2. Rigid Clear-Span Frames: I-shaped frame sections fabricated from shop-welded, built-up steel plates or structural-steel shapes. Interior columns are not permitted.
3. Frame Configuration: One-directional, sloped.
4. Exterior Column: Tapered.
5. Rafter: Uniform depth.

F. End-Wall Framing: Manufacturer's standard primary end-wall framing fabricated for field-bolted assembly to comply with the following:
1. End-Wall Framing for Parapets: Manufacturer’s standard End-Wall Extended Columns for parapet height indicated.
2. End-Wall Rafters: C-shaped, cold-formed, structural-steel sheet; or I-shaped sections fabricated from shop-welded, built-up steel plates or structural-steel shapes.

G. Parapet Structural Stubs, High and Low Sidewall: Manufacturer’s standard parapet stubs for bolting to Frame Columns, for parapet height indicated.

H. Secondary Framing: Manufacturer's standard secondary framing, including purlins, girts, eave struts, flange bracing, base members, gable angles, clips, headers, jambs, and other miscellaneous structural members. Unless otherwise indicated, fabricate framing from either

cold-formed, structural-steel sheet or roll-formed, metallic-coated steel sheet, prepainted with coil coating, to comply with the following:

1. Purlins: C- or Z-shaped sections; fabricated from built-up steel plates, steel sheet, or structural-steel shapes; minimum 2-1/2-inch- (64-mm-) wide flanges.

    a. Depth: As needed to comply with system performance requirements.

2. Girts: C- or Z-shaped sections; fabricated from built-up steel plates, steel sheet, or structural-steel shapes. Form ends of Z-sections with stiffening lips angled 40 to 50 degrees from flange, with minimum 2-1/2-inch- (64-mm-) wide flanges.

    a. Depth: As required to comply with system performance requirements.

3. Eave Struts: Unequal-flange, C-shaped sections; fabricated from built-up steel plates, steel sheet, or structural-steel shapes; to provide adequate backup for metal panels.
4. Flange Bracing: Minimum 2-by-2-by-1/8-inch (51-by-51-by-3-mm) structural-steel angles or 1-inch- (25-mm-) diameter, cold-formed structural tubing to stiffen primary-frame flanges.
5. Sag Bracing: Minimum 1-by-1-by-1/8-inch (25-by-25-by-3-mm) structural-steel angles.
6. Base or Sill Angles: Manufacturer's standard base angle, minimum 3-by-2-inch (76-by-51-mm), fabricated from zinc-coated (galvanized) steel sheet.
7. Purlin and Girt Clips: Manufacturer's standard clips fabricated from steel sheet. Provide galvanized clips where clips are connected to galvanized framing members.
8. Framing for Openings: Channel shapes; fabricated from cold-formed, structural-steel sheet or structural-steel shapes. Frame head and jamb of door openings and head, jamb, and sill of other openings.
9. Miscellaneous Structural Members: Manufacturer's standard sections fabricated from cold-formed, structural-steel sheet; built-up steel plates; or zinc-coated (galvanized) steel sheet; designed to withstand required loads.

I. Bracing: Provide adjustable wind bracing as follows:
    1. Fixed-Base Columns: Fabricated from shop-welded, built-up steel plates or structural-steel shapes to match primary framing; of size required to withstand design loads.

J. Anchor Rods: Headed anchor rods as indicated in Anchor Rod Plan for attachment of metal building to foundation.

K. Materials:

    1. See Structural Drawings for Structural Steel Requirements.

L. Finish: Factory primed. Apply specified primer immediately after cleaning and pretreating.

    1. Clean and prepare in accordance with SSPC-SP2.
    2. Coat with manufacturer's standard primer. Apply primer to primary and secondary framing to a minimum dry film thickness of 1 mil (0.025 mm).

a. Prime secondary framing formed from uncoated steel sheet to a minimum dry film thickness of 0.5 mil (0.013 mm) on each side.

2.5 THERMAL INSULATION

A. Retainer Strips: For securing insulation between supports, 0.025-inch (0.64-mm) nominal-thickness, formed, metallic-coated steel or PVC retainer clips colored to match insulation facing.
   1. At locations where insulation is concealed Retainer Clips may be without matching finish.

B. Vapor-Retarder Facing: ASTM C 1136, with permeance not greater than 0.02 perm (1.15 ng/Pa x s x sq. m) when tested according to ASTM E 96/E 96M, Desiccant Method.

   1. Composition: White polypropylene film facing, fiberglass scrim reinforcement, and metallized-polyester film backing.

C. Vapor-Retarder Tape: Pressure-sensitive tape of type recommended by vapor-retarder manufacturer for sealing joints and penetrations in vapor retarder.

2.6 ACCESSORIES

A. General: Provide accessories as standard with metal building system manufacturer and as specified. Fabricate and finish accessories at the factory to greatest extent possible, by manufacturer's standard procedures and processes. Comply with indicated profiles and with dimensional and structural requirements.

   1. Form exposed sheet metal accessories that are without excessive oil-canning, buckling, and tool marks and that are true to line and levels indicated, with exposed edges folded back to form hems.

B. Roof Curbs: Zinc-coated (galvanized) or aluminum-zinc alloy-coated steel sheet, 0.048-inch (1.21-mm) nominal uncoated steel thickness prepainted with coil coating; finished to match metal roof panels; with welded top box and bottom skirt, and integral full-length cricket; capable of withstanding loads of size and height indicated.

   1. Curb Sub-framing: Zinc-coated (galvanized) or aluminum-zinc alloy-coated steel sheet, 0.060-inch (1.52-mm) nominal uncoated steel thickness, angle-, C-, or Z-shaped metallic-coated steel sheet.
   2. Insulation: 1-inch- (25-mm-) thick, rigid type.

C. Materials:

   1. Fasteners: Self-tapping screws, bolts, nuts, self-locking rivets and bolts, end-welded studs, and other suitable fasteners designed to withstand design loads. Provide fasteners

with heads matching color of materials being fastened by means of plastic caps or factory-applied coating.

2. Corrosion-Resistant Coating: Cold-applied asphalt mastic, compounded for 15-mil (0.4-mm) dry film thickness per coat. Provide inert-type noncorrosive compound free of asbestos fibers, sulfur components, and other deleterious impurities.

3. Nonmetallic, Shrinkage-Resistant Grout: ASTM C 1107/C 1107M, factory-packaged, nonmetallic aggregate grout, noncorrosive, nonstaining, mixed with water to consistency suitable for application and a 30-minute working time.

2.7 FABRICATION

A. General: Design components and field connections required for erection to permit easy assembly.

1. Mark each piece and part of the assembly to correspond with previously prepared erection drawings, diagrams, and instruction manuals.
2. Fabricate structural framing to produce clean, smooth cuts and bends. Punch holes of proper size, shape, and location. Members shall be free of cracks, tears, and ruptures.

B. Tolerances: Comply with MBMA's "Metal Building Systems Manual" for fabrication and erection tolerances.

C. Primary Framing: Shop fabricate framing components to indicated size and section, with baseplates, bearing plates, stiffeners, and other items required for erection welded into place. Cut, form, punch, drill, and weld framing for bolted field assembly.

1. Make shop connections by welding or by using high-strength bolts.
2. Join flanges to webs of built-up members by a continuous, submerged arc-welding process.
3. Brace compression flange of primary framing with steel angles or cold-formed structural tubing between frame web and purlin web or girt web, so flange compressive strength is within allowable limits for any combination of loadings.
4. Weld clips to frames for attaching secondary framing if applicable, or punch for bolts.
5. Shop Priming: Prepare surfaces for shop priming according to SSPC-SP 2. Shop prime primary framing with specified primer after fabrication.

D. Secondary Framing: Shop fabricate framing components to indicated size and section by roll forming or break forming, with baseplates, bearing plates, stiffeners, and other plates required for erection welded into place. Cut, form, punch, drill, and weld secondary framing for bolted field connections to primary framing.

1. Make shop connections by welding or by using non-high-strength bolts.
2. Shop Priming: Prepare uncoated surfaces for shop priming according to SSPC-SP 2. Shop prime uncoated secondary framing with specified primer after fabrication.

2.8 SOURCE QUALITY CONTROL

A. Special Inspection: Owner will engage a qualified special inspector to perform source quality control inspections and to submit reports.

1. Accredited Manufacturers: Special inspections will not be required if fabrication is performed by an IAS AC472-accredited manufacturer approved by authorities having jurisdiction to perform such Work without special inspection.

a. After fabrication, submit copy of certificate of compliance to authorities having jurisdiction, certifying that Work was performed according to Contract requirements.

PART 3 - EXECUTION

3.1 EXAMINATION

A. Examine substrates, areas, and conditions, with erector present, for compliance with requirements for installation tolerances and other conditions affecting performance of the Work.

B. Before erection proceeds, survey elevations and locations of concrete- and masonry-bearing surfaces and locations of anchor rods, bearing plates, and other embedments to receive structural framing, with erector present, for compliance with requirements and metal building system manufacturer's tolerances.

1. Engage land surveyor to perform surveying.

C. Proceed with erection only after unsatisfactory conditions have been corrected.

3.2 PREPARATION

A. Clean and prepare surfaces to be painted according to manufacturer's written instructions for each particular substrate condition.

B. Provide temporary shores, guys, braces, and other supports during erection to keep structural framing secure, plumb, and in alignment against temporary construction loads and loads equal in intensity to design loads. Remove temporary supports when permanent structural framing, connections, and bracing are in place unless otherwise indicated.

3.3 ERECTION OF STRUCTURAL FRAMING

A. Erect metal building system according to manufacturer's written instructions and drawings.

B. Do not field cut, drill, or alter structural members without written approval from metal building system manufacturer's professional engineer.

C. Set structural framing accurately in locations and to elevations indicated, according to AISC specifications referenced in this Section. Maintain structural stability of frame during erection.

D. Base and Bearing Plates: Clean concrete- and masonry-bearing surfaces of bond-reducing materials, and roughen surfaces prior to setting plates. Clean bottom surface of plates.

1. Set plates for structural members on wedges, shims, or setting nuts as required.
2. Tighten anchor rods after supported members have been positioned and plumbed. Do not remove wedges or shims but, if protruding, cut off flush with edge of plate before packing with grout.
3. Promptly pack grout solidly between bearing surfaces and plates so no voids remain. Neatly finish exposed surfaces; protect grout and allow to cure. Comply with manufacturer's written installation instructions for shrinkage-resistant grouts.

E. Align and adjust structural framing before permanently fastening. Before assembly, clean bearing surfaces and other surfaces that will be in permanent contact with framing. Perform necessary adjustments to compensate for discrepancies in elevations and alignment.

1. Level and plumb individual members of structure.
2. Make allowances for difference between temperature at time of erection and mean temperature when structure will be completed and in service.

F. Primary Framing and End Walls: Erect framing level, plumb, rigid, secure, and true to line. Level baseplates to a true even plane with full bearing to supporting structures, set with double-nutted anchor bolts. Use grout to obtain uniform bearing and to maintain a level base-line elevation. Moist-cure grout for not less than seven days after placement.

1. Make field connections using high-strength bolts installed according to RCSC's "Specification for Structural Joints Using High-Strength Bolts" for bolt type and joint type specified.

a. Joint Type: Snug tightened or pretensioned as required by manufacturer.

G. Secondary Framing: Erect framing level, plumb, rigid, secure, and true to line. Field bolt secondary framing to clips attached to primary framing.

1. Provide rake or gable purlins with tight-fitting closure channels and fasciae.
2. Locate and space wall girts to suit openings such as doors and windows.
3. Provide supplemental framing at entire perimeter of openings, including doors, windows, louvers, ventilators, and other penetrations of roof and walls.

H. Bracing: Install bracing in roof and sidewalls where indicated on erection drawings.

1. Tighten rod and cable bracing to avoid sag.

2. Locate interior end-bay bracing only where indicated.

I. Framing for Openings: Provide shapes of proper design and size to reinforce openings and to carry loads and vibrations imposed, including equipment furnished under mechanical and electrical work. Securely attach to structural framing.

J. Erection Tolerances: Maintain erection tolerances of structural framing within AISC 303.

3.4 THERMAL INSULATION INSTALLATION

A. General: Install insulation concurrently with metal wall panel installation, in thickness indicated to cover entire surface, according to manufacturer's written instructions.

1. Set vapor-retarder-faced units with vapor retarder toward warm side of construction unless otherwise indicated. Do not obstruct ventilation spaces except for firestopping.
2. Tape joints and ruptures in vapor retarder, and seal each continuous area of insulation to the surrounding construction to ensure airtight installation.
3. Install factory-laminated, vapor-retarder-faced blankets straight and true in one-piece lengths, with both sets of facing tabs sealed, to provide a complete vapor retarder.
4. Install blankets straight and true in one-piece lengths. Install vapor retarder over insulation, with both sets of facing tabs sealed, to provide a complete vapor retarder.

3.5 ACCESSORY INSTALLATION

A. General: Install accessories with positive anchorage to building and weathertight mounting, and provide for thermal expansion. Coordinate installation with flashings and other components.
1. Install components for a complete metal wall panel assembly, including trim, copings, corners, seam covers, flashings, sealants, gaskets, fillers, closure strips, and similar items.
2. Where dissimilar metals contact each other or corrosive substrates, protect against galvanic action by painting contact surfaces with corrosion-resistant coating, by applying rubberized-asphalt underlayment to each contact surface, or by other permanent separation as recommended by manufacturer.

B. Roof Curbs: Install curbs at locations indicated on Drawings. Install flashing around bases where they meet metal roof panels.

3.6 FIELD QUALITY CONTROL

A. Special Inspections: Owner will engage a qualified special inspector to perform field quality control special inspections and to submit reports.

B. Product will be considered defective if it does not pass tests and inspections.

C. Prepare test and inspection reports.

3.7 CLEANING AND PROTECTION

A. Repair damaged galvanized coatings on galvanized items with galvanized repair paint according to ASTM A 780/A 780M and manufacturer's written instructions.

B. Remove and replace glass that has been broken, chipped, cracked, abraded, or damaged during construction period.

C. Touchup Painting: After erection, promptly clean, prepare, and prime or reprime field connections, rust spots, and abraded surfaces of prime-painted structural framing[, bearing plates,] and accessories.

1. Clean and prepare surfaces by SSPC-SP 2, "Hand Tool Cleaning," or by SSPC-SP 3, "Power Tool Cleaning."
2. Apply a compatible primer of same type as shop primer used on adjacent surfaces.

D. Touchup Painting: Cleaning and touchup painting are specified in Section 099113 "Exterior Painting" and Section 099123 "Interior Painting."

END OF SECTION 13 34 19

SECTION 22 0523 - GENERAL-DUTY VALVES FOR PLUMBING PIPING

PART 1 - GENERAL

1.1 RELATED DOCUMENTS

A. Drawings and general provisions of the Contract, including General and Supplementary Conditions and Division 1 Specification Sections, apply to this Section.

1.2 SUMMARY

A. This Section includes the following general-duty valves:

1. Angle valves.
2. Ball valves.
3. Butterfly valves.
4. Check valves.
5. Gate valves.
6. Plug valves.

1.3 DEFINITIONS

A. The following are standard abbreviations for valves:

1. CWP: Cold working pressure.
2. EPDM: Ethylene-propylene-diene terpolymer rubber.
3. NBR: Acrylonitrile-butadiene rubber.
4. PTFE: Polytetrafluoroethylene plastic.
5. SWP: Steam working pressure.
6. TFE: Tetrafluoroethylene plastic.

1.4 SUBMITTALS

A. Product Data: For each type of valve indicated. Include body, seating, and trim materials; valve design; pressure and temperature classifications; end connections; arrangement; dimensions; and required clearances. Include list indicating valve and its application. Include rated capacities; shipping, installed, and operating weights; furnished specialties; and accessories.

1.5 QUALITY ASSURANCE

A. ASME Compliance for Ferrous Valves: ASME B16.10 and ASME B16.34 for dimension and design criteria.

B. NSF Compliance: NSF 61 for valve materials for potable-water service.

1.6 DELIVERY, STORAGE, AND HANDLING

A. Use the following precautions during storage:

1. Maintain valve end protection.
2. Store valves indoors and maintain at higher than ambient dew-point temperature. If outdoor storage is necessary, store valves off the ground in watertight enclosures.

PART 2 - PRODUCTS

2.1 VALVES, GENERAL

A. Bronze Valves: NPS 2 and smaller with threaded ends, unless otherwise indicated.

B. Ferrous Valves: NPS 2-1/2 and larger with flanged ends, unless otherwise indicated.

C. Valve Pressure and Temperature Ratings: Not less than indicated and as required for system pressures and temperatures.

D. Valve Sizes: Same as upstream pipe, unless otherwise indicated.

E. Valve Actuators:

1. Chainwheel: For attachment to valves, of size and mounting height.
2. Gear Drive: For quarter-turn valves NPS 8 and larger.
3. Handwheel: For valves other than quarter-turn types.
4. Lever Handle: For quarter-turn valves NPS 6 and smaller, except plug valves.
5. Wrench: For plug valves with square heads. Furnish Owner with 1 wrench for every 10 plug valves, for each size square plug head.

F. Extended Valve Stems: On insulated valves.

G. Valve Flanges: ASME B16.1 for cast-iron valves, ASME B16.5 for steel valves, and ASME B16.24 for bronze valves.

2.2 BRONZE ANGLE VALVES

A. Bronze Angle Valves, General: MSS SP-80, with ferrous-alloy handwheel.

B. Class 125, Bronze Angle Valves: Bronze body with bronze disc and renewable seat. Include union-ring bonnet.

C. Class 150, Bronze Angle Valves: Bronze body with bronze disc and renewable seat. Include union-ring bonnet.

D. Class 200, Bronze Angle Valves: Bronze body with bronze disc and renewable seat. Include union-ring bonnet.

2.3 COPPER-ALLOY BALL VALVES

A. Copper-Alloy Ball Valves, General: MSS SP-110.

B. One-Piece, Copper-Alloy Ball Valves: Brass or bronze body with chrome-plated bronze ball, PTFE or TFE seats, and 400-psig minimum CWP rating.

C. Two-Piece, Copper-Alloy Ball Valves: Brass or bronze body with full-port, chrome-plated bronze ball; PTFE or TFE seats; and 600-psig minimum CWP rating and blowout-proof stem.

2.4 FERROUS-ALLOY BALL VALVES

A. Ferrous-Alloy Ball Valves, General: MSS SP-72, with flanged ends.

B. Ferrous-Alloy Ball Valves: Class 150, full port.

C. Ferrous-Alloy Ball Valves: Class 300, full port.

2.5 FERROUS-ALLOY BUTTERFLY VALVES

A. Ferrous-Alloy Butterfly Valves, General: MSS SP-67, Type I, for tight shutoff, with disc and lining suitable for potable water, unless otherwise indicated.

B. Flangeless, 150-psig CWP Rating, Ferrous-Alloy Butterfly Valves: Wafer type with one- or two-piece stem.

C. Flangeless, 175-psig CWP Rating, Ferrous-Alloy Butterfly Valves: Wafer type with one- or two-piece stem.

D. Flangeless, 200-psig CWP Rating, Ferrous-Alloy Butterfly Valves: Wafer type with one- or two-piece stem.

E. Flanged, 150-psig CWP Rating, Ferrous-Alloy Butterfly Valves: Flanged-end type with one- or two-piece stem.

F. Flanged, 175-psig CWP Rating, Ferrous-Alloy Butterfly Valves: Flanged-end type with one- or two-piece stem.

G. Flanged, 200-psig CWP Rating, Ferrous-Alloy Butterfly Valves: Flanged-end type with one- or two-piece stem.

2.6 BRONZE CHECK VALVES

A. Bronze Check Valves, General: MSS SP-80.

B. Class 125, Bronze, Swing Check Valves: Bronze body with bronze disc and seat.

C. Class 150, Bronze, Swing Check Valves: Bronze body with bronze disc and seat.

D. Class 200, Bronze, Swing Check Valves: Bronze body with bronze disc and seat.

2.7 FERROUS-ALLOY WAFER CHECK VALVES

A. Ferrous-Alloy Wafer Check Valves, General: API 594, spring loaded.

B. Single-Plate, Class 125 or 150, Ferrous-Alloy, Wafer Check Valves: Flangeless body.

C. Single-Plate, Class 250 or 300, Ferrous-Alloy, Wafer Check Valves: Flangeless body.

D. Single-Plate, Class 125 or 150, Ferrous-Alloy, Wafer-Lug Check Valves: Single-flange body.

E. Single-Plate, Class 250 or 300, Ferrous-Alloy, Wafer-Lug Check Valves: Single-flange body.

2.8 BRONZE GATE VALVES

A. Bronze Gate Valves, General: MSS SP-80, with ferrous-alloy handwheel.

B. Class 125, Bronze Gate Valves: Bronze body and bronze solid wedge and union-ring bonnet.

C. Class 150, Bronze Gate Valves: Bronze body and bronze solid wedge and union-ring bonnet.

D. Class 200, Bronze Gate Valves: Bronze body and bronze solid wedge and union-ring bonnet.

2.9 CAST-IRON GATE VALVES

A. Cast-Iron Gate Valves, General: MSS SP-70, Type I.

B. Class 125, Bronze-Mounted, Cast-Iron Gate Valves: Cast-iron body with bronze trim, and solid-wedge disc.

C. Class 250, Bronze-Mounted, Cast-Iron Gate Valves: Cast-iron body with bronze trim, and solid-wedge disc.

2.10 CAST-IRON PLUG VALVES

A. Cast-Iron Plug Valves, General: MSS SP-78.

B. Class 125 or 150, lubricated-type, cast-iron plug valves.

C. Class 250 or 300, lubricated-type, cast-iron plug valves.

D. Class 125 or 150, nonlubricated-type, cast-iron plug valves.

E. Class 250, nonlubricated-type, cast-iron plug valves.

PART 3 - EXECUTION

3.1 EXAMINATION

A. Examine piping system for compliance with requirements for installation tolerances and other conditions affecting performance.

1. Proceed with installation only after unsatisfactory conditions have been corrected.

B. Examine valve interior for cleanliness, freedom from foreign matter, and corrosion. Remove special packing materials, such as blocks, used to prevent disc movement during shipping and handling.

C. Operate valves in positions from fully open to fully closed. Examine guides and seats made accessible by such operations.

D. Examine threads on valve and mating pipe for form and cleanliness.

E. Examine mating flange faces for conditions that might cause leakage. Check bolting for proper size, length, and material. Verify that gasket is of proper size, that its material composition is suitable for service, and that it is free from defects and damage.

F. Do not attempt to repair defective valves; replace with new valves.

3.2 VALVE APPLICATIONS

A. Refer to piping Sections for specific valve applications. If valve applications are not indicated, use the following:

1. Shutoff Service: Ball, butterfly, gate, or plug valves.
2. Throttling Service: Angle, ball, butterfly, or globe valves.
3. Pump Discharge: Spring-loaded, lift-disc check valves.

B. If valves with specified SWP classes or CWP ratings are not available, the same types of valves with higher SWP class or CWP ratings may be substituted.

3.3 VALVE INSTALLATION

A. Piping installation requirements are specified in other Division 15 Sections. Drawings indicate general arrangement of piping, fittings, and specialties.

B. Install valves with unions or flanges at each piece of equipment arranged to allow service, maintenance, and equipment removal without system shutdown.

C. Locate valves for easy access and provide separate support where necessary.

D. Install valves in horizontal piping with stem at or above center of pipe.

E. Install valves in position to allow full stem movement.

F. Install check valves for proper direction of flow and as follows:

1. Swing Check Valves: In horizontal position with hinge pin level.
2. Lift Check Valves: With stem upright and plumb.

3.4 JOINT CONSTRUCTION

A. Grooved Joints: Assemble joints with keyed coupling housing, gasket, lubricant, and bolts according to coupling and fitting manufacturer's written instructions.

B. Soldered Joints: Use ASTM B 813, water-flushable, lead-free flux; ASTM B 32, lead-free-alloy solder; and ASTM B 828 procedure, unless otherwise indicated.

3.5 ADJUSTING

A. Adjust or replace valve packing after piping systems have been tested and put into service but before final adjusting and balancing. Replace valves if persistent leaking occurs.

END OF SECTION 22 0523

SECTION 22 0719 - PLUMBING PIPING INSULATION

PART 1 - GENERAL

1.1 RELATED DOCUMENTS

A. Drawings and general provisions of the Contract, including General and Supplementary Conditions and Division 1 Specification Sections, apply to this Section.

1.2 SUMMARY

A. This Section includes preformed, rigid and flexible pipe insulation; insulating cements; field-applied jackets; accessories and attachments; and sealing compounds.

1.3 SUBMITTALS

A. Product Data: Identify thermal conductivity, thickness, and jackets (both factory and field applied, if any), for each type of product indicated.

1.4 QUALITY ASSURANCE

A. Installer Qualifications: Skilled mechanics who have successfully completed an apprenticeship program or another craft training program certified by the U.S. Department of Labor, Bureau of Apprenticeship and Training.

B. Fire-Test-Response Characteristics: As determined by testing materials identical to those specified in this Section according to ASTM E 84, by a testing and inspecting agency acceptable to authorities having jurisdiction. Factory label insulation and jacket materials and sealer and cement material containers with appropriate markings of applicable testing and inspecting agency.

1. Insulation Installed Indoors: Flame-spread rating of 25 or less, and smoke-developed rating of 50 or less.
2. Insulation Installed Outdoors: Flame-spread rating of 75 or less, and smoke-developed rating of 150 or less.

1.5 DELIVERY, STORAGE, AND HANDLING

A. Packaging: Ship insulation materials in containers marked by manufacturer with appropriate ASTM specification designation, type and grade, and maximum use temperature.

1.6 COORDINATION

A. Coordinate clearance requirements with piping Installer for insulation application.

1.7 SCHEDULING

A. Schedule insulation application after testing piping systems and, where required, after installing and testing heat-trace tape. Insulation application may begin on segments of piping that have satisfactory test results.

PART 2 - PRODUCTS

2.1 INSULATION MATERIALS

A. Mineral-Fiber Insulation: Glass fibers bonded with a thermosetting resin complying with the following:

1. Preformed Pipe Insulation: Comply with ASTM C 547, Type 1, with factory-applied, all-purpose, vapor-retarder jacket.
2. Blanket Insulation: Comply with ASTM C 553, Type II, without facing.
3. Fire-Resistant Adhesive: Comply with MIL-A-3316C in the following classes and grades:

   a. Class 1, Grade A for bonding glass cloth and tape to unfaced glass-fiber insulation, for sealing edges of glass-fiber insulation, and for bonding lagging cloth to unfaced glass-fiber insulation.
   b. Class 2, Grade A for bonding glass-fiber insulation to metal surfaces.

4. Vapor-Retarder Mastics: Fire- and water-resistant, vapor-retarder mastic for indoor applications. Comply with MIL-C-19565C, Type II.
5. Mineral-Fiber Insulating Cements: Comply with ASTM C 195.
6. Expanded or Exfoliated Vermiculite Insulating Cements: Comply with ASTM C 196.
7. Mineral-Fiber, Hydraulic-Setting Insulating and Finishing Cement: Comply with ASTM C 449/C 449M.

B. Cellular-Glass Insulation: Inorganic, foamed or cellulated glass, annealed, rigid, hermetically sealed cells, incombustible.

1. Preformed Pipe Insulation, without Jacket: Comply with ASTM C 552, Type II, Class 1.
2. Preformed Pipe Insulation, with Jacket: Comply with ASTM C 552, Type II, Class 2.

2.2 FIELD-APPLIED JACKETS

A. General: ASTM C 921, Type 1, unless otherwise indicated.

B. Foil and Paper Jacket: Laminated, glass-fiber-reinforced, flame-retardant kraft paper and aluminum foil.

C. PVC Jacket: High-impact, ultraviolet-resistant PVC; 20 mils thick; roll stock ready for shop or field cutting and forming.

1. Adhesive: As recommended by insulation material manufacturer.
2. PVC Jacket Color: White or gray.

D. Standard PVC Fitting Covers: Factory-fabricated fitting covers manufactured from 20-mil thick, high-impact, ultraviolet-resistant PVC.

1. Shapes: 45- and 90-degree, short- and long-radius elbows, tees, valves, flanges, reducers, end caps, soil-pipe hubs, traps, mechanical joints, and P-trap and supply covers for lavatories for the disabled.
2. Adhesive: As recommended by insulation material manufacturer.

E. Aluminum Jacket: Aluminum roll stock, ready for shop or field cutting and forming to indicated sizes. Comply with ASTM B 209, 3003 alloy, H-14 temper.

1. Finish and Thickness: Smooth finish, 0.010 inch thick.
2. Moisture Barrier: 1-mil thick, heat-bonded polyethylene and kraft paper.
3. Elbows: Preformed, 45- and 90-degree, short- and long-radius elbows; same material, finish, and thickness as jacket.

F. Stainless-Steel Jacket: ASTM A 666, Type 304 or 316; 0.10 inch thick; and roll stock ready for shop or field cutting and forming to indicated sizes.

1. Moisture Barrier: 3-mil thick, heat-bonded polyethylene and kraft paper.
2. Elbows: Gore type, for 45- and 90-degree elbows in same material, finish, and thickness as jacket.
3. Jacket Bands: Stainless steel, Type 304, 3/4 inch wide.

2.3 ACCESSORIES AND ATTACHMENTS

A. Glass Cloth and Tape: Comply with MIL-C-20079H, Type I for cloth and Type II for tape. Woven glass-fiber fabrics, plain weave, presized a minimum of 8 oz./sq. yd..

1. Tape Width: 4 inches.

B. Bands: 3/4 inch wide, in one of the following materials compatible with jacket:

1. Stainless Steel: ASTM A 666, Type 304; 0.020 inch thick.
2. Galvanized Steel: 0.005 inch thick.
3. Aluminum: 0.007 inch thick.

C. Wire: 0.080-inch, nickel-copper alloy; 0.062-inch, soft-annealed, stainless steel; or 0.062-inch, soft-annealed, galvanized steel.

2.4 VAPOR RETARDERS

A. Mastics: Materials recommended by insulation material manufacturer that are compatible with insulation materials, jackets, and substrates.

PART 3 - EXECUTION

3.1 EXAMINATION

A. Examine substrates and conditions for compliance with requirements for installation and other conditions affecting performance of insulation application.

B. Proceed with installation only after unsatisfactory conditions have been corrected.

3.2 PREPARATION

A. Surface Preparation: Clean and dry pipe and fitting surfaces. Remove materials that will adversely affect insulation application.

3.3 GENERAL APPLICATION REQUIREMENTS

A. Apply insulation materials, accessories, and finishes according to the manufacturer's written instructions; with smooth, straight, and even surfaces; free of voids throughout the length of piping, including fittings, valves, and specialties.

B. Use accessories compatible with insulation materials and suitable for the service. Use accessories that do not corrode, soften, or otherwise attack insulation or jacket in either wet or dry state.

C. Apply insulation with longitudinal seams at top and bottom of horizontal pipe runs.

D. Apply multiple layers of insulation with longitudinal and end seams staggered.

E. Do not weld brackets, clips, or other attachment devices to piping, fittings, and specialties.

F. Seal joints and seams with vapor-retarder mastic on insulation indicated to receive a vapor retarder.

G. Keep insulation materials dry during application and finishing.

H. Apply insulation with tight longitudinal seams and end joints. Bond seams and joints with adhesive recommended by the insulation material manufacturer.

I. Apply insulation with the least number of joints practical.

J. Apply insulation over fittings, valves, and specialties, with continuous thermal and vapor-retarder integrity, unless otherwise indicated. Refer to special instructions for applying insulation over fittings, valves, and specialties.

K. Hangers and Anchors: Where vapor retarder is indicated, seal penetrations in insulation at hangers, supports, anchors, and other projections with vapor-retarder mastic.

1. Apply insulation continuously through hangers and around anchor attachments.
2. For insulation application where vapor retarders are indicated, extend insulation on anchor legs at least 12 inches from point of attachment to pipe and taper insulation ends. Seal tapered ends with a compound recommended by the insulation material manufacturer to maintain vapor retarder.
3. Install insert materials and apply insulation to tightly join the insert. Seal insulation to insulation inserts with adhesive or sealing compound recommended by the insulation material manufacturer.
4. Cover inserts with jacket material matching adjacent pipe insulation. Install shields over jacket, arranged to protect the jacket from tear or puncture by the hanger, support, and shield.

L. Insulation Terminations: For insulation application where vapor retarders are indicated, taper insulation ends. Seal tapered ends with a compound recommended by the insulation material manufacturer to maintain vapor retarder.

M. Apply adhesives and mastics at the manufacturer's recommended coverage rate.

N. Apply insulation with integral jackets as follows:

1. Pull jacket tight and smooth.
2. Circumferential Joints: Cover with 3-inch wide strips, of same material as insulation jacket. Secure strips with adhesive and outward clinching staples along both edges of strip and spaced 4 inches o.c.
3. Longitudinal Seams: Overlap jacket seams at least 1-1/2 inches. Apply insulation with longitudinal seams at bottom of pipe. Clean and dry surface to receive self-sealing lap. Staple laps with outward clinching staples along edge at 4 inches o.c.

   a. Exception: Do not staple longitudinal laps on insulation having a vapor retarder.

4. Vapor-Retarder Mastics: Where vapor retarders are indicated, apply mastic on seams and joints and at ends adjacent to flanges, unions, valves, and fittings.
5. At penetrations in jackets for thermometers and pressure gages, fill and seal voids with vapor-retarder mastic.

O. Roof Penetrations: Apply insulation for interior applications to a point even with top of roof flashing.

1. Seal penetrations with vapor-retarder mastic.
2. Apply insulation for exterior applications tightly joined to interior insulation ends.
3. Extend metal jacket of exterior insulation outside roof flashing at least 2 inches below top of roof flashing.

4. Seal metal jacket to roof flashing with vapor-retarder mastic.

P. Exterior Wall Penetrations: For penetrations of below-grade exterior walls, terminate insulation flush with mechanical sleeve seal. Seal terminations with vapor-retarder mastic.

Q. Interior Wall and Partition Penetrations: Apply insulation continuously through walls and floors.

R. Fire-Rated Wall and Partition Penetrations: Apply insulation continuously through penetrations of fire-rated walls and partitions.

1. Firestopping and fire-resistive joint sealers are specified in Division 7 Section "Firestopping."

S. Floor Penetrations: Apply insulation continuously through floor assembly.

1. For insulation with vapor retarders, seal insulation with vapor-retarder mastic where floor supports penetrate vapor retarder.

3.4 FIELD-APPLIED JACKET APPLICATION

A. Apply glass-cloth jacket, where indicated, directly over bare insulation or insulation with factory-applied jackets.

1. Apply jacket smooth and tight to surface with 2-inch overlap at seams and joints.
2. Embed glass cloth between two 0.062-inch thick coats of jacket manufacturer's recommended adhesive.
3. Completely encapsulate insulation with jacket, leaving no exposed raw insulation.

B. Foil and Paper Jackets: Apply foil and paper jackets where indicated.

1. Draw jacket material smooth and tight.
2. Apply lap or joint strips with the same material as jacket.
3. Secure jacket to insulation with manufacturer's recommended adhesive.
4. Apply jackets with 1-1/2-inch laps at longitudinal seams and 3-inch wide joint strips at end joints.
5. Seal openings, punctures, and breaks in vapor-retarder jackets and exposed insulation with vapor-retarder mastic.

C. Apply PVC jacket where indicated, with 1-inch overlap at longitudinal seams and end joints. Seal with manufacturer's recommended adhesive.

D. Apply metal jacket where indicated, with 2-inch overlap at longitudinal seams and end joints. Overlap longitudinal seams arranged to shed water. Seal end joints with weatherproof sealant recommended by insulation manufacturer. Secure jacket with stainless-steel bands 12 inches o.c. and at end joints.

3.5 INSULATION APPLICATION SCHEDULE, GENERAL

A. Refer to insulation application schedules for required insulation materials, vapor retarders, and field-applied jackets.

B. Application schedules identify piping system and indicate pipe size ranges and material, thickness, and jacket requirements.

3.6 INTERIOR INSULATION APPLICATION SCHEDULE

A. Service: Domestic hot and recirculated hot water.

1. Operating Temperature: 60 to 140 deg F.
2. Insulation Material: Cellular glass, with all service jacket.
3. Insulation Thickness: Apply the following insulation thicknesses:

   a. Copper Pipe, ½" to 4": 1" insulation thickness.

4. Field-Applied Jacket: Aluminum.

END OF SECTION 22 0719

SECTION 22 1116 - DOMESTIC WATER PIPING

PART 1 - GENERAL

1.1 RELATED DOCUMENTS

A. Drawings and general provisions of the Contract, including General and Supplementary Conditions and Division 1 Specification Sections, apply to this Section.

1.2 SUMMARY

A. This Section includes domestic water piping from locations indicated to fixtures and equipment inside the building.

1.3 DEFINITIONS

A. CPVC: Chlorinated polyvinyl chloride plastic.

B. PA: Polyamide (nylon) plastic.

C. PE: Polyethylene plastic.

D. PEX: Crosslinked polyethylene plastic.

E. PP: Polypropylene plastic.

F. PVC: Polyvinyl chloride plastic.

1.4 PERFORMANCE REQUIREMENTS

A. Provide components and installation capable of producing domestic water piping systems with the following minimum working-pressure ratings, unless otherwise indicated:

1. Domestic Water Service Piping: 100 psig.
2. Domestic Water Distribution Piping: 80 psig.

1.5 SUBMITTALS

A. Product Data: For pipe, tube, fittings, and couplings.

1.6 QUALITY ASSURANCE

A. Piping materials shall bear label, stamp, or other markings of specified testing agency.

B. Comply with NFPA 24, "Installation of Private Fire Service Mains and Their Appurtenances," and NSF 61, "Drinking Water System Components-Health Effects; Sections 1 through 9," for combined fire-protection and domestic water service piping to building.

C. Comply with NSF 14, "Plastics Piping Components and Related Materials," for plastic, potable domestic water piping and components. Include marking "NSF-pw" on piping.

D. Comply with NSF 61, "Drinking Water System Components-Health Effects; Sections 1 through 9," for potable domestic water piping and components.

PART 2 - PRODUCTS

2.1 PIPING MATERIALS

A. Transition Couplings for Aboveground Pressure Piping: Coupling or other manufactured fitting the same size as, with pressure rating at least equal to and ends compatible with, piping to be joined.

B. Transition Couplings for Underground Pressure Piping: AWWA C219, metal, sleeve-type coupling or other manufactured fitting the same size as, with pressure rating at least equal to and ends compatible with, piping to be joined.

2.2 COPPER TUBING

A. Soft Copper Tube: ASTM B 88, Types K and L, water tube, annealed temper.

1. Copper Pressure Fittings: ASME B16.18, cast-copper-alloy or ASME B16.22, wrought-copper, solder-joint fittings. Furnish wrought-copper fittings if indicated.
2. Bronze Flanges: ASME B16.24, Class 150, with solder-joint end. Furnish Class 300 flanges if required to match piping.
3. Copper Unions: MSS SP-123, cast-copper-alloy, hexagonal-stock body, with ball-and-socket, metal-to-metal seating surfaces and solder-joint or threaded ends.

B. Hard Copper Tube: ASTM B 88, Types L and M, water tube, drawn temper.

1. Copper Pressure Fittings: ASME B16.18, cast-copper-alloy or ASME B16.22, wrought-copper, solder-joint fittings. Furnish wrought-copper fittings if indicated.
2. Bronze Flanges: ASME B16.24, Class 150, with solder-joint end. Furnish Class 300 flanges if required to match piping.
3. Copper Unions: MSS SP-123, cast-copper-alloy, hexagonal-stock body, with ball-and-socket, metal-to-metal seating surfaces and solder-joint or threaded ends.

4. Copper, Grooved-End Fittings: ASTM B 75 copper tube or ASTM B 584 bronze castings.

   a. Copper-Tubing, Keyed Couplings: Copper-tube dimensions and design similar to AWWA C606. Include ferrous housing sections, gasket suitable for hot water, and bolts and nuts.

2.3 PEX PIPING

A. PEX Tube: ASTM F 876, SDR 9.

1. Brass Fittings: Insert type with corrosion-resistant metal bands.

B. PEX Distribution System: ASTM F 877, SDR 9 tubing.

1. Fittings for PEX Tube: Brass insert type with metal bands or brass or plastic compression type complying with ASTM F 877 and matching PEX tube dimensions.
2. Manifold: Multiple-outlet, plastic or corrosion-resistant-metal assembly complying with ASTM F 877 and with plastic or corrosion-resistant-metal valve for each outlet.

2.4 VALVES

A. Refer to Division 15 Section "Valves" for bronze and cast-iron, general-duty valves.

PART 3 - EXECUTION

3.1 PIPING APPLICATIONS

A. Transition and special fittings with pressure ratings at least equal to piping rating may be used in applications below, unless otherwise indicated.

B. Flanges may be used on aboveground piping, unless otherwise indicated.

C. Grooved joints may be used on aboveground grooved-end piping.

D. Fitting Option: Mechanically formed tee-branch outlets and brazed joints may be used on aboveground copper tubing.

E. Underground Domestic Water Service Piping: Use the following piping materials for each size range:

1. NPS 2 and Smaller: Soft copper tube, Type K; copper pressure fittings; and soldered joints.
2. NPS 2 and Smaller: PEX tube; brass fittings; and mechanical, compression or banded joints.

3. NPS 2-1/2 to NPS 3-1/2: Soft copper tube, Type K; copper pressure fittings; and soldered joints.

F. Aboveground Domestic Water Piping: Use the following piping materials for each size range:

1. NPS 1-1/2 and Smaller: Hard copper tube, Type L; copper pressure fittings; and soldered joints.
2. NPS 2: Hard copper tube, Type L; copper pressure fittings; and soldered joints.
3. NPS 2-1/2 to NPS 3-1/2: Hard copper tube, Type L; copper pressure fittings; and soldered joints.
4. NPS 4 to NPS 6: Steel pipe; gray-iron, threaded fittings; and threaded joints.
5. NPS 4 to NPS 6: Steel pipe with grooved ends; steel-piping, grooved-end fittings; steel-piping, keyed couplings; and grooved joints.
6. NPS 8: Steel pipe with grooved ends; steel-piping, grooved-end fittings; steel-piping, keyed couplings; and grooved joints.

3.2 PIPING INSTALLATION

A. Extend domestic water service piping to exterior water distribution piping in sizes and locations indicated.

B. Install underground copper tubing according to CDA's "Copper Tube Handbook."

C. Install underground PEX tubing according to ASTM D 2774 and ASTM F 645.

D. Install cast-iron sleeve with water stop and mechanical sleeve seal at each service pipe penetration through foundation wall. Select number of interlocking rubber links required to make installation watertight. Refer to Division 15 Section "Basic Mechanical Materials and Methods" for sleeves and mechanical sleeve seals.

E. Install wall penetration system at each service pipe penetration through foundation wall. Make installation watertight. Refer to Division 15 Section "Basic Mechanical Materials and Methods" for wall penetration systems.

F. Install shutoff valve, hose-end drain valve, strainer, pressure gage, and test tee with valve, inside building at each domestic water service.

G. Install water-pressure regulators downstream from shutoff valves. Refer to Division 15 Section "Plumbing Specialties" for water-pressure regulators.

H. Install aboveground domestic water piping level and plumb.

I. Fill water piping. Check components to determine that they are not air bound and that piping is full of water.

J. Perform the following steps before operation:

1. Close drain valves, hydrants, and hose bibbs.
2. Open shutoff valves to fully open position.

3. Open throttling valves to proper setting.
4. Remove plugs used during testing of piping and plugs used for temporary sealing of piping during installation.
5. Remove and clean strainer screens. Close drain valves and replace drain plugs.
6. Remove filter cartridges from housings, and verify that cartridges are as specified for application where used and that cartridges are clean and ready for use.

K. Check plumbing equipment and verify proper settings, adjustments, and operation. Do not operate water heaters before filling with water.

L. Check plumbing specialties and verify proper settings, adjustments, and operation.

1. Water-Pressure Regulators: Set outlet pressure at 80 psig maximum, unless otherwise indicated.

M. Energize pumps and verify proper operation.

3.3 JOINT CONSTRUCTION

A. Soldered Joints: Use ASTM B 813, water-flushable, lead-free flux; ASTM B 32, lead-free-alloy solder; and ASTM B 828 procedure, unless otherwise indicated.

B. Grooved Joints: Assemble joints with keyed-coupling housing, gasket, lubricant, and bolts according to coupling and fitting manufacturer's written instructions.

C. Mechanically Formed Outlets: Form tee in copper tube according to equipment manufacturer's written instructions. Use tool designed for copper tube; drill pilot hole, form collar for outlet, dimple tube to form seating stop, and braze branch tube into collar.

3.4 ROUGHING-IN FOR WATER METERS

A. Rough-in domestic water piping according to utility company's requirements. Water meters will be furnished by utility.

3.5 VALVE INSTALLATION

A. Install sectional valve close to water main on each branch and riser serving plumbing fixtures or equipment. Use ball or gate valves for piping NPS 2 and smaller. Use butterfly or gate valves for piping NPS 2-1/2 and larger.

B. Install shutoff valve on each water supply to equipment and on each water supply to plumbing fixtures without supply stops. Use ball or gate valves for piping NPS 2 and smaller. Use butterfly or gate valves for piping NPS 2-1/2 and larger.

C. Install drain valves for equipment, at base of each water riser, at low points in horizontal piping, and where required to drain water piping.

1. Install hose-end drain valves at low points in water mains, risers, and branches.
2. Install stop-and-waste drain valves where indicated.

D. Install balancing valve in each hot-water circulation return branch and discharge side of each pump and circulator. Set balancing valves partly open to restrict but not stop flow. Use ball valves for piping NPS 2 and smaller and butterfly valves for piping NPS 2-1/2 and larger. Refer to Division 15 Section "Plumbing Specialties" for balancing valves.

E. Install calibrated balancing valves in each hot-water circulation return branch and discharge side of each pump and circulator. Set calibrated balancing valves partly open to restrict but not stop flow.

3.6 HANGER AND SUPPORT INSTALLATION

A. Install the following:

1. Vertical Piping: MSS Type 8 or Type 42, clamps.
2. Individual, Straight, Horizontal Piping Runs: According to the following:

   a. 100 Feet and Less: MSS Type 1, adjustable, steel clevis hangers.
   b. Longer Than 100 Feet: MSS Type 43, adjustable roller hangers.
   c. Longer Than 100 Feet, if Indicated: MSS Type 49, spring cushion rolls.

3. Multiple, Straight, Horizontal Piping Runs 100 Feet or Longer: MSS Type 44, pipe rolls. Support pipe rolls on trapeze.
4. Base of Vertical Piping: MSS Type 52, spring hangers.

B. Support vertical piping and tubing at base and at each floor.

C. Rod diameter may be reduced 1 size for double-rod hangers, to a minimum of 3/8 inch.

D. Install hangers for steel piping with the following maximum horizontal spacing and minimum rod diameters:

1. NPS 1-1/4 and Smaller: 84 inches with 3/8-inch rod.
2. NPS 1-1/2: 108 inches with 3/8-inch rod.
3. NPS 2: 10 feet with 3/8-inch rod.
4. NPS 2-1/2: 11 feet with 1/2-inch rod.
5. NPS 3 and NPS 3-1/2: 12 feet with 1/2-inch rod.
6. NPS 4 and NPS 5: 12 feet with 5/8-inch rod.
7. NPS 6: 12 feet with 3/4-inch rod.
8. NPS 8 to NPS 12: 12 feet with 7/8-inch rod.

E. Install supports for vertical steel piping every 15 feet.

F. Install hangers for copper tubing with the following maximum horizontal spacing and minimum rod diameters:

1. NPS 3/4 and Smaller: 60 inches with 3/8-inch rod.

2. NPS 1 and NPS 1-1/4: 72 inches with 3/8-inch rod.
3. NPS 1-1/2 and NPS 2: 96 inches with 3/8-inch rod.
4. NPS 2-1/2: 108 inches with 1/2-inch rod.
5. NPS 3 to NPS 5: 10 feet with 1/2-inch rod.
6. NPS 6: 10 feet with 5/8-inch rod.
7. NPS 8: 10 feet with 3/4-inch rod.

G. Install supports for vertical copper tubing every 10 feet.

3.7 CONNECTIONS

A. Drawings indicate general arrangement of piping, fittings, and specialties.

B. Install piping adjacent to equipment and machines to allow service and maintenance.

C. Connect domestic water piping to exterior water service piping. Use transition fitting to join dissimilar piping materials.

D. Connect domestic water piping to service piping with shutoff valve, and extend and connect to the following:

1. Booster Systems: Cold-water suction and discharge piping.
2. Water Heaters: Cold-water supply and hot-water outlet piping in sizes indicated, but not smaller than sizes of water heater connections.
3. Plumbing Fixtures: Cold- and hot-water supply piping in sizes indicated, but not smaller than required by plumbing code.
4. Equipment: Cold- and hot-water supply piping as indicated, but not smaller than equipment connections. Provide shutoff valve and union for each connection. Use flanges instead of unions for NPS 2-1/2 and larger.

3.8 FIELD QUALITY CONTROL

A. Inspect domestic water piping as follows:

1. Do not enclose, cover, or put piping into operation until it is inspected and approved by authorities having jurisdiction.
2. During installation, notify authorities having jurisdiction at least 24 hours before inspection must be made. Perform tests specified below in presence of authorities having jurisdiction:

   a. Roughing-in Inspection: Arrange for inspection of piping before concealing or closing-in after roughing-in and before setting fixtures.
   b. Final Inspection: Arrange for final inspection by authorities having jurisdiction to observe tests specified below and to ensure compliance with requirements.

3. Reinspection: If authorities having jurisdiction find that piping will not pass test or inspection, make required corrections and arrange for reinspection.

4. Reports: Prepare inspection reports and have them signed by authorities having jurisdiction.

B. Test domestic water piping as follows:

1. Test for leaks and defects in new piping and parts of existing piping that have been altered, extended, or repaired. If testing is performed in segments, submit separate report for each test, complete with diagram of portion of piping tested.
2. Leave uncovered and unconcealed new, altered, extended, or replaced domestic water piping until it has been tested and approved. Expose work that was covered or concealed before it was tested.
3. Cap and subject piping to static water pressure of 50 psig above operating pressure, without exceeding pressure rating of piping system materials. Isolate test source and allow to stand for four hours. Leaks and loss in test pressure constitute defects that must be repaired.
4. Repair leaks and defects with new materials and retest piping or portion thereof until satisfactory results are obtained.
5. Prepare reports for tests and required corrective action.

3.9 ADJUSTING

A. Adjust balancing valves in hot-water-circulation return piping to provide adequate flow.

1. Manually adjust ball-type balancing valves in hot-water-circulation return piping to provide flow of hot water in each branch.
2. Adjust calibrated balancing valves to flows indicated.

3.10 CLEANING

A. Clean and disinfect potable domestic water piping as follows:

1. Purge new piping and parts of existing domestic water piping that have been altered, extended, or repaired before using.
2. Use purging and disinfecting procedures prescribed by authorities having jurisdiction or, if methods are not prescribed, procedures described in either AWWA C651 or AWWA C652 or as described below:

   a. Flush piping system with clean, potable water until dirty water does not appear at outlets.
   b. Fill and isolate system according to either of the following:

      1) Fill system or part thereof with water/chlorine solution with at least 50 ppm of chlorine. Isolate with valves and allow to stand for 24 hours.
      2) Fill system or part thereof with water/chlorine solution with at least 200 ppm of chlorine. Isolate and allow to stand for three hours.

   c. Flush system with clean, potable water until no chlorine is in water coming from system after the standing time.

d. Submit water samples in sterile bottles to authorities having jurisdiction. Repeat procedures if biological examination shows contamination.

B. Prepare and submit reports of purging and disinfecting activities.

C. Clean interior of domestic water piping system. Remove dirt and debris as work progresses.

END OF SECTION 22 1116

SECTION 22 1316 - SANITARY WASTE AND VENT PIPING

PART 1 - GENERAL

1.1 RELATED DOCUMENTS

A. Drawings and general provisions of the Contract, including General and Supplementary Conditions and Division 1 Specification Sections, apply to this Section.

1.2 SUMMARY

A. This Section includes soil and waste, sanitary drainage and vent piping inside the building and to locations indicated.

1.3 DEFINITIONS

A. The following are industry abbreviations for plastic and rubber piping materials:

1. ABS: Acrylonitrile-butadiene-styrene plastic.
2. EPDM: Ethylene-propylene-diene terpolymer.
3. NBR: Acrylonitrile-butadiene rubber.
4. PE: Polyethylene plastic.
5. PVC: Polyvinyl chloride plastic.

1.4 PERFORMANCE REQUIREMENTS

A. Provide components and installation capable of producing piping systems with the following minimum working-pressure ratings, unless otherwise indicated:

1. Soil, Waste, and Vent Piping: 10-foot head of water.
2. Sanitary Sewer, Force-Main Piping: 50 psig.

1.5 SUBMITTALS

A. Product Data: For pipe, tube, fittings, and couplings.

1.6 QUALITY ASSURANCE

A. Piping materials shall bear label, stamp, or other markings of specified testing agency.

B. Comply with NSF 14, "Plastics Piping Systems Components and Related Materials," for plastic piping components. Include marking with "NSF-dwv" for plastic drain, waste, and vent piping;

"NSF-drain" for plastic drain piping; "NSF-tubular" for plastic continuous waste piping; and "NSF-sewer" for plastic sewer piping.

PART 2 - PRODUCTS

2.1 PIPING MATERIALS

A. Flexible Transition Couplings for Underground Nonpressure Piping: ASTM C 1173 with elastomeric sleeve. Include ends of same sizes as piping to be joined and include corrosion-resistant metal band on each end.

B. Transition Couplings for Underground Pressure Piping: AWWA C219 metal, sleeve-type coupling or other manufactured fitting same size as, with pressure rating at least equal to and ends compatible with, piping to be joined.

2.2 CAST-IRON SOIL PIPING

A. Hub-and-Spigot Pipe and Fittings: ASTM A 74, Service class.

1. Gaskets: ASTM C 564, rubber.

B. Hubless Pipe and Fittings: ASTM A 888 or CISPI 301.

1. Couplings: ASTM C 1277 assembly of metal housing, corrosion-resistant fasteners, and ASTM C 564 rubber sleeve with integral, center pipe stop.

a. Heavy-Duty, Type 304, Stainless-Steel Couplings: ASTM A 666, Type 304, stainless-steel shield; stainless-steel bands; and sleeve.

1) NPS 1-1/2 to NPS 4: 3-inch- wide shield with 4 bands.
2) NPS 5 to NPS 10: 4-inch- wide shield with 6 bands.

b. Heavy-Duty, FM-Approved Couplings: ASTM A 666, Type 304, stainless-steel housing; stainless-steel bands; and sleeve.

1) NPS 1-1/2 to NPS 4: 3-inch- wide housing with 2 bands.
2) NPS 5 to NPS 10: 4-inch- wide housing with 2 bands.

c. Heavy-Duty, Cast-Iron Couplings: ASTM A 48, 2-piece, cast-iron housing; stainless-steel bolts and nuts; and sleeve.

2.3 ABS PIPING

A. ABS Pipe: ASTM D 2661, Schedule 40, solid wall.

1. ABS Socket Fittings: ASTM D 2661, made to ASTM D 3311, drain, waste, and vent patterns.

B. Cellular-Core, ABS Pipe: ASTM F 628, Schedule 40.

1. ABS Socket Fittings: ASTM D 2661, made to ASTM D 3311, drain, waste, and vent patterns.

C. ABS Special Fittings: ASTM F 409, drainage-pattern tube and tubular fittings with ends as required for application.

2.4 PVC PIPING

A. PVC Pipe: ASTM D 2665, solid-wall drain, waste, and vent.

1. PVC Socket Fittings: ASTM D 2665, socket type, made to ASTM D 3311, drain, waste, and vent patterns.

B. Cellular-Core, Schedule 40, PVC Pipe: ASTM F 891, Schedule 40.

1. PVC Socket Fittings: ASTM D 2665, made to ASTM D 3311, drain, waste, and vent patterns and to fit Schedule 40 pipe.

C. Cellular-Core, Sewer and Drain Series, PVC Pipe: ASTM F 891, Series PS 100.

1. PVC Socket Fittings: ASTM D 2665, made to ASTM D 3311, drain, waste, and vent patterns and to fit Series PS 100 sewer and drain pipe.

D. PVC Special Fittings: ASTM F 409, drainage-pattern tube and tubular fittings with ends as required for application.

PART 3 - EXECUTION

3.1 PIPING APPLICATIONS

A. Transition and special fittings with pressure ratings at least equal to piping pressure ratings may be used in applications below, unless otherwise indicated.

B. Flanges may be used on aboveground pressure piping, unless otherwise indicated.

C. Soil, Waste, and Vent Piping: Use the following piping materials for each size range:

1. NPS 1-1/4 and NPS 1-1/2: Use NPS 1-1/2 hubless, cast-iron soil piping and one of the following:

a. Couplings: Heavy-duty, Type 304, stainless steel.
b. Couplings: Heavy-duty, FM approved cast iron.

2. NPS 1-1/4 and NPS 1-1/2: Steel pipe; cast-iron, threaded drainage fittings; and threaded joints.
3. NPS 1-1/4 and NPS 1-1/2: ABS pipe, ABS socket fittings, and solvent-cemented joints.
4. NPS 1-1/4 and NPS 1-1/2: Cellular-core, ABS pipe; ABS socket fittings; and solvent-cemented joints.
5. NPS 1-1/4 and NPS 1-1/2: PVC pipe, PVC socket fittings, and solvent-cemented joints.
6. NPS 1-1/4 and NPS 1-1/2: Cellular-core, Schedule 40, PVC pipe; PVC socket fittings; and solvent-cemented joints.
7. NPS 2 to NPS 4: Service class, cast-iron soil piping; gaskets; and gasketed joints.
8. NPS 2 to NPS 4: Hubless, cast-iron soil piping and one of the following:

    a. Couplings: Heavy-duty, Type 304, stainless steel.
    b. Couplings: Heavy-duty, FM approved cast iron.

9. NPS 2 to NPS 4: ABS pipe, ABS socket fittings, and solvent-cemented joints.
10. NPS 2 to NPS 4: Cellular-core, ABS pipe; ABS socket fittings; and solvent-cemented joints.
11. NPS 2 to NPS 4: PVC pipe, PVC socket fittings, and solvent-cemented joints.
12. NPS 2 to NPS 4: Cellular-core, Schedule 40, PVC pipe; PVC socket fittings; and solvent-cemented joints.
13. NPS 5 and NPS 6: Service class, cast-iron soil piping; gaskets; and gasketed joints.
14. NPS 5 and NPS 6: Hubless, cast-iron soil piping and one of the following:

    a. Couplings: Heavy-duty, Type 304, stainless steel.
    b. Couplings: Heavy-duty, FM approved cast iron.

15. NPS 5 and NPS 6: Use NPS 6 ABS pipe, ABS socket fittings, and solvent-cemented joints.
16. NPS 5 and NPS 6: Use NPS 6 cellular-core, ABS pipe; ABS socket fittings; and solvent-cemented joints.
17. NPS 5 and NPS 6: Use NPS 6 PVC pipe, PVC socket fittings, and solvent-cemented joints.
18. NPS 5 and NPS 6: Cellular-core, Schedule 40, PVC pipe; PVC socket fittings; and solvent-cemented joints.

3.2 PIPING INSTALLATION

A. Install cleanouts at grade and extend to where building sanitary drains connect to building sanitary sewers.

B. Install cleanout fitting with closure plug inside the building in sanitary force-main piping.

C. Install cast-iron sleeve with water stop and mechanical sleeve seal at each service pipe penetration through foundation wall. Select number of interlocking rubber links required to make installation watertight. Refer to Division 15 Section "Basic Mechanical Materials and Methods" for sleeves and mechanical sleeve seals.

D. Install wall penetration system at each service pipe penetration through foundation wall. Make installation watertight. Refer to Division 15 Section "Basic Mechanical Materials and Methods" for wall penetration systems.

E. Install cast-iron soil piping according to CISPI's "Cast Iron Soil Pipe and Fittings Handbook," Chapter IV, "Installation of Cast Iron Soil Pipe and Fittings."

1. Encase underground piping with PE film according to ASTM A 674 or AWWA C105.

F. Make changes in direction for soil and waste drainage and vent piping using appropriate branches, bends, and long-sweep bends. Sanitary tees and short-sweep 1/4 bends may be used on vertical stacks if change in direction of flow is from horizontal to vertical. Use long-turn, double Y-branch and 1/8-bend fittings if 2 fixtures are installed back to back or side by side with common drain pipe. Straight tees, elbows, and crosses may be used on vent lines. Do not change direction of flow more than 90 degrees. Use proper size of standard increasers and reducers if pipes of different sizes are connected. Reducing size of drainage piping in direction of flow is prohibited.

G. Lay buried building drainage piping beginning at low point of each system. Install true to grades and alignment indicated, with unbroken continuity of invert. Place hub ends of piping upstream. Install required gaskets according to manufacturer's written instructions for use of lubricants, cements, and other installation requirements. Maintain swab in piping and pull past each joint as completed.

H. Install soil and waste drainage and vent piping at the following minimum slopes, unless otherwise indicated:

1. Building Sanitary Drain: 2 percent downward in direction of flow for piping NPS 3 and smaller; 1 percent downward in direction of flow for piping NPS 4 and larger.
2. Horizontal Sanitary Drainage Piping: 2 percent downward in direction of flow.
3. Vent Piping: 1 percent down toward vertical fixture vent or toward vent stack.

I. Install force mains at elevations indicated.

J. Install engineered soil and waste drainage and vent piping systems in locations indicated and as follows:

1. Combination Waste and Vent: Comply with standards of authorities having jurisdiction.
2. Cast-Iron, Sovent, Single Stack: Comply with ASSE 1043 and sovent fitting manufacturer's written installation instructions.
3. Reduced-Size Venting: Comply with standards of authorities having jurisdiction.

K. Sleeves are not required for cast-iron soil piping passing through concrete slabs-on-grade if slab is without membrane waterproofing.

L. Install ABS soil and waste drainage and vent piping according to ASTM D 2661.

M. Install PVC soil and waste drainage and vent piping according to ASTM D 2665.

N. Install underground ABS and PVC soil and waste drainage piping according to ASTM D 2321.

O. Do not enclose, cover, or put piping into operation until it is inspected and approved by authorities having jurisdiction.

3.3 JOINT CONSTRUCTION

A. Cast-Iron, Soil-Piping Joints: Make joints according to CISPI's "Cast Iron Soil Pipe and Fittings Handbook," Chapter IV, "Installation of Cast Iron Soil Pipe and Fittings."

1. Gasketed Joints: Make with rubber gasket matching class of pipe and fittings.
2. Hubless Joints: Make with rubber gasket and sleeve or clamp.

B. Grooved Joints: Assemble joint with keyed coupling, gasket, lubricant, and bolts according to coupling and fitting manufacturer's written instructions.

C. PVC Nonpressure Piping Joints: Join piping according to ASTM D 2665.

3.4 VALVE INSTALLATION

A. Shutoff Valves: Install shutoff valve on each sewage pump discharge.

1. Use gate or full-port ball valve for piping NPS 2 and smaller.
2. Use gate valve for piping NPS 2-1/2 and larger.

B. Check Valves: Install swing check valve, downstream from shutoff valve, on each sewage pump discharge.

C. Backwater Valves: Install backwater valves in piping subject to sewage backflow.

1. Horizontal Piping: Horizontal backwater valves. Use normally closed type, unless otherwise indicated.
2. Floor Drains: Drain outlet backwater valves, unless drain has integral backwater valve.
3. Install backwater valves in accessible locations.

3.5 HANGER AND SUPPORT INSTALLATION

A. Install the following:

1. Vertical Piping: MSS Type 8 or Type 42, clamps.
2. Individual, Straight, Horizontal Piping Runs: According to the following:

   a. 100 Feet and Less: MSS Type 1, adjustable, steel clevis hangers.
   b. Longer Than 100 Feet: MSS Type 43, adjustable roller hangers.
   c. Longer Than 100 Feet, if Indicated: MSS Type 49, spring cushion rolls.

3. Multiple, Straight, Horizontal Piping Runs 100 Feet or Longer: MSS Type 44, pipe rolls. Support pipe rolls on trapeze.
4. Base of Vertical Piping: MSS Type 52, spring hangers.

B. Support vertical piping and tubing at base and at each floor.

C. Rod diameter may be reduced 1 size for double-rod hangers, with 3/8-inch minimum rods.

D. Install hangers for cast-iron soil piping with the following maximum horizontal spacing and minimum rod diameters:

1. NPS 1-1/2 and NPS 2: 60 inches with 3/8-inch rod.
2. NPS 3: 60 inches with 1/2-inch rod.
3. NPS 4 and NPS 5: 60 inches with 5/8-inch rod.
4. NPS 6: 60 inches with 3/4-inch rod.
5. NPS 8 to NPS 12: 60 inches with 7/8-inch rod.
6. NPS 15: 60 inches with 1-inch rod.
7. Spacing for 10-foot lengths may be increased to 10 feet. Spacing for fittings is limited to 60 inches.

E. Install supports for vertical cast-iron soil piping every 15 feet.

F. Install hangers for steel piping with the following maximum horizontal spacing and minimum rod diameters:

1. NPS 1-1/4: 84 inches with 3/8-inch rod.
2. NPS 1-1/2: 108 inches with 3/8-inch rod.
3. NPS 2: 10 feet with 3/8-inch rod.
4. NPS 2-1/2: 11 feet with 1/2-inch rod.
5. NPS 3: 12 feet with 1/2-inch rod.
6. NPS 4 and NPS 5: 12 feet with 5/8-inch rod.
7. NPS 6: 12 feet with 3/4-inch rod.
8. NPS 8 to NPS 12: 12 feet with 7/8-inch rod.

G. Install supports for vertical steel piping every 15 feet.

H. Install hangers for ABS and PVC piping with the following maximum horizontal spacing and minimum rod diameters:

1. NPS 1-1/2 and NPS 2: 48 inches with 3/8-inch rod.
2. NPS 3: 48 inches with 1/2-inch rod.
3. NPS 4 and NPS 5: 48 inches with 5/8-inch rod.
4. NPS 6: 48 inches with 3/4-inch rod.
5. NPS 8 to NPS 12: 48 inches with 7/8-inch rod.

I. Install supports for vertical ABS and PVC piping every 48 inches.

J. Support piping and tubing not listed above according to MSS SP-69 and manufacturer's written instructions.

3.6 CONNECTIONS

A. Drawings indicate general arrangement of piping, fittings, and specialties.

B. Connect soil and waste piping to exterior sanitary sewerage piping. Use transition fitting to join dissimilar piping materials.

C. Connect drainage and vent piping to the following:

1. Plumbing Fixtures: Connect drainage piping in sizes indicated, but not smaller than required by plumbing code.
2. Plumbing Fixtures and Equipment: Connect atmospheric vent piping in sizes indicated, but not smaller than required by authorities having jurisdiction.
3. Plumbing Specialties: Connect drainage and vent piping in sizes indicated, but not smaller than required by plumbing code.
4. Equipment: Connect drainage piping as indicated. Provide shutoff valve, if indicated, and union for each connection. Use flanges instead of unions for connections NPS 2-1/2 and larger.

D. Connect force-main piping to the following:

1. Sanitary Sewer: To exterior force main or sanitary manhole.
2. Sewage Pumps: To sewage pump discharge.

3.7 FIELD QUALITY CONTROL

A. During installation, notify authorities having jurisdiction at least 24 hours before inspection must be made. Perform tests specified below in presence of authorities having jurisdiction.

1. Roughing-in Inspection: Arrange for inspection of piping before concealing or closing-in after roughing-in and before setting fixtures.
2. Final Inspection: Arrange for final inspection by authorities having jurisdiction to observe tests specified below and to ensure compliance with requirements.

B. Reinspection: If authorities having jurisdiction find that piping will not pass test or inspection, make required corrections and arrange for reinspection.

C. Reports: Prepare inspection reports and have them signed by authorities having jurisdiction.

D. Test sanitary drainage and vent piping according to procedures of authorities having jurisdiction or, in absence of published procedures, as follows:

1. Test for leaks and defects in new piping and parts of existing piping that have been altered, extended, or repaired. If testing is performed in segments, submit separate report for each test, complete with diagram of portion of piping tested.
2. Leave uncovered and unconcealed new, altered, extended, or replaced drainage and vent piping until it has been tested and approved. Expose work that was covered or concealed before it was tested.
3. Roughing-in Plumbing Test Procedure: Test drainage and vent piping, except outside leaders, on completion of roughing-in. Close openings in piping system and fill with water to point of overflow, but not less than 10-foot head of water. From 15 minutes before inspection starts to completion of inspection, water level must not drop. Inspect joints for leaks.

4. Finished Plumbing Test Procedure: After plumbing fixtures have been set and traps filled with water, test connections and prove they are gastight and watertight. Plug vent-stack openings on roof and building drains where they leave building. Introduce air into piping system equal to pressure of 1-inch wg. Use U-tube or manometer inserted in trap of water closet to measure this pressure. Air pressure must remain constant without introducing additional air throughout period of inspection. Inspect plumbing fixture connections for gas and water leaks.
5. Repair leaks and defects with new materials and retest piping, or portion thereof, until satisfactory results are obtained.
6. Prepare reports for tests and required corrective action.

E. Test force-main piping according to procedures of authorities having jurisdiction or, in absence of published procedures, as follows:

1. Leave uncovered and unconcealed new, altered, extended, or replaced force-main piping until it has been tested and approved. Expose work that was covered or concealed before it was tested.
2. Cap and subject piping to static-water pressure of 50 psig above operating pressure, without exceeding pressure rating of piping system materials. Isolate test source and allow to stand for four hours. Leaks and loss in test pressure constitute defects that must be repaired.
3. Repair leaks and defects with new materials and retest piping, or portion thereof, until satisfactory results are obtained.
4. Prepare reports for tests and required corrective action.

3.8 CLEANING

A. Clean interior of piping. Remove dirt and debris as work progresses.

B. Protect drains during remainder of construction period to avoid clogging with dirt and debris and to prevent damage from traffic and construction work.

C. Place plugs in ends of uncompleted piping at end of day and when work stops.

3.9 PROTECTION

A. Exposed ABS and PVC Piping: Protect plumbing vents exposed to sunlight with two coats of water-based latex paint.

END OF SECTION 22 1316

SECTION 22 4000 - PLUMBING FIXTURES

PART 1 - GENERAL

1.1 RELATED DOCUMENTS

A. Drawings and general provisions of the Contract, including General and Supplementary Conditions and Division 1 Specification Sections, apply to this Section.

1.2 SUMMARY

A. This Section includes plumbing fixtures and related components.

1.3 DEFINITIONS

A. Accessible Fixture: Plumbing fixture that can be approached, entered, and used by people with disabilities.

B. Fitting: Device that controls flow of water into or out of plumbing fixture. Fittings specified in this Section include supplies and stops, faucets and spouts, shower heads and tub spouts, drains and tailpieces, and traps and waste pipes. Piping and general-duty valves are included where indicated.

1.4 SUBMITTALS

A. Product Data: Include selected fixture and trim, fittings, accessories, appliances, appurtenances, equipment, and supports and indicate materials and finishes, dimensions, construction details, and flow-control rates for each type of fixture indicated.

B. Maintenance Data: For plumbing fixtures to include in maintenance manuals specified.

1.5 QUALITY ASSURANCE

A. Source Limitations: Obtain plumbing fixtures, faucets, and other components of each category through one source from a single manufacturer.

1. Exception: If fixtures, faucets, or other components are not available from a single manufacturer, obtain similar products from other manufacturers specified for that category.

B. Electrical Components, Devices, and Accessories: Listed and labeled as defined in NFPA 70, Article 100, by a testing agency acceptable to authorities having jurisdiction, and marked for intended use.

C. Regulatory Requirements: Comply with requirements in ICC A117.1, "Accessible and Usable Buildings and Facilities and Public Law 101-336, "Americans with Disabilities Act"; about plumbing fixtures for people with disabilities.

D. Regulatory Requirements: Comply with requirements in U.S. Architectural & Transportation Barriers Compliance Board's "Uniform Federal Accessibility Standards (UFAS), 1985-494-187" about plumbing fixtures for people with disabilities.

E. Regulatory Requirements: Comply with requirements in Public Law 102-486, "Energy Policy Act," about water flow and consumption rates for plumbing fixtures.

F. NSF Standard: Comply with NSF 61, "Drinking Water System Components--Health Effects," for fixture materials that will be in contact with potable water.

G. Select combinations of fixtures and trim, faucets, fittings, and other components that are compatible.

1.6 COORDINATION

A. Coordinate roughing-in and final plumbing fixture locations, and verify that fixtures can be installed to comply with original design and referenced standards.

1.7 EXTRA MATERIALS

A. Furnish extra materials described below that match products installed and that are packaged with protective covering for storage and identified with labels describing contents.

1. Faucet Washers and O-Rings: Equal to 10 percent of amount of each type and size installed.
2. Faucet Cartridges and O-Rings: Equal to 5 percent of amount of each type and size installed.
3. Faucet, Laminar-Flow Fittings: Equal to 10 percent of amount of each type and size installed, but not less than 2 of each type and size.
4. Faucet, Flow-Control Fittings: Equal to 10 percent of amount of each type and size installed.
5. Supply, Flow-Control Fittings: Equal to 5 percent of amount of each type and size installed.
6. Shower, Flow-Control Fittings: Equal to 5 percent of amount of each type and size installed.
7. Flushometer Valve, Repair Kits: Equal to 10 percent of amount of each type installed, but not less than 12 of each type.
8. Flushometer Tank, Repair Kits: Equal to 5 percent of amount of each type installed, but not less than 2 of each type.
9. Water-Closet Tank, Repair Kits: Equal to 5 percent of amount of each type installed.
10. Toilet Seats: Equal to 5 percent of amount of each type installed.

PART 2 - PRODUCTS

2.1 See fixture schedule on contract drawings.

PART 3 - EXECUTION

3.1 EXAMINATION

A. Examine roughing-in for water soil and for waste piping systems and supports to verify actual locations and sizes of piping connections and that locations and types of supports match those indicated, before plumbing fixture installation. Use manufacturer's roughing-in data if roughing-in data are not indicated.

B. Examine walls, floors, and cabinets for suitable conditions where fixtures are to be installed.

C. Proceed with installation only after unsatisfactory conditions have been corrected.

3.2 FIXTURE INSTALLATION

A. Assemble fixtures, trim, fittings, and other components according to manufacturers' written instructions.

B. For wall-hanging fixtures, install off-floor supports affixed to building substrate.

1. Use carrier supports with waste fitting and seal for back-outlet fixtures.
2. Use carrier supports without waste fitting for fixtures with tubular waste piping.
3. Use chair-type carrier supports with rectangular steel uprights for accessible fixtures.

C. Install back-outlet, wall-hanging fixtures onto waste fitting seals and attach to supports.

D. Install floor-mounting fixtures on closet flanges or other attachments to piping or building substrate.

E. Install wall-hanging fixtures with tubular waste piping attached to supports.

F. Install floor-mounting, back-outlet water closets attached to building floor substrate and wall bracket and onto waste fitting seals.

G. Install counter-mounting fixtures in and attached to casework.

H. Install fixtures level and plumb according to manufacturers' written instructions and roughing-in drawings.

I. Install water-supply piping with stop on each supply to each fixture to be connected to water distribution piping. Attach supplies to supports or substrate within pipe spaces behind fixtures. Install stops in locations where they can be easily reached for operation.

1. Exception: Use ball, gate, or globe valve if stops are not specified with fixture.

J. Install trap and tubular waste piping on drain outlet of each fixture to be directly connected to sanitary drainage system.

K. Install tubular waste piping on drain outlet of each fixture to be indirectly connected to drainage system.

L. Install flushometer valves for accessible water closets and urinals with handle mounted on wide side of compartment. Install other actuators in locations that are easy for people with disabilities to reach.

M. Install tanks for accessible, tank-type water closets with lever handle mounted on wide side of compartment.

N. Install toilet seats on water closets.

O. Install faucet-spout fittings with specified flow rates and patterns in faucet spouts if faucets are not available with required rates and patterns. Include adapters if required.

P. Install water-supply, flow-control fittings with specified flow rates in fixture supplies at stop valves.

Q. Install faucet, flow-control fittings with specified flow rates and patterns in faucet spouts if faucets are not available with required rates and patterns. Include adapters if required.

R. Install shower, flow-control fittings with specified maximum flow rates in shower arms.

S. Install traps on fixture outlets.

1. Exception: Omit trap on fixtures with integral traps.
2. Exception: Omit trap on indirect wastes, unless otherwise indicated.

T. Install escutcheons at piping wall ceiling penetrations in exposed, finished locations and within cabinets and millwork. Use deep-pattern escutcheons if required to conceal protruding fittings. Refer to Division 15 Section "Basic Mechanical Materials and Methods" for escutcheons.

U. Seal joints between fixtures and walls, floors, and counters using sanitary-type, one-part, mildew-resistant, silicone sealant. Match sealant color to fixture color.

3.3 CONNECTIONS

A. Piping installation requirements are specified in other Division 15 Sections. Drawings indicate general arrangement of piping, fittings, and specialties.

B. Connect water supplies from water distribution piping to fixtures.

C. Connect drain piping from fixtures to drainage piping.

D. Supply and Waste Connections to Plumbing Fixtures: Connect fixtures with water supplies, stops, risers, traps, and waste piping. Use size fittings required to match fixtures. Connect to plumbing piping.

3.4 FIELD QUALITY CONTROL

A. Verify that installed fixtures are categories and types specified for locations where installed.

B. Check that fixtures are complete with trim, faucets, fittings, and other specified components.

C. Inspect installed fixtures for damage. Replace damaged fixtures and components.

D. Test installed fixtures after water systems are pressurized for proper operation. Replace malfunctioning fixtures and components, then retest. Repeat procedure until units operate properly.

3.5 ADJUSTING

A. Operate and adjust faucets and controls. Replace damaged and malfunctioning fixtures, fittings, and controls.

B. Adjust water pressure to produce proper flow and stream.

C. Replace washers and seals of leaking and dripping faucets and stops.

3.6 CLEANING

A. Clean fixtures, faucets, and other fittings with manufacturers' recommended cleaning methods and materials. Do the following:

1. Remove faucet spouts and strainers, remove sediment and debris, and reinstall strainers and spouts.
2. Remove sediment and debris from drains.

3.7 PROTECTION

A. Provide protective covering for installed fixtures and fittings.

B. Do not allow use of fixtures for temporary facilities unless approved in writing by Owner.

END OF SECTION 22 4000

SECTION 23 0000 - BASIC MECHANICAL MATERIALS AND METHODS

PART 1 - GENERAL

1.1 RELATED DOCUMENTS

A. Drawings and general provisions of the Contract, including General and Supplementary Conditions and Division 1 Specification Sections, apply to this Section.

1.2 SUMMARY

A. This Section includes the following basic mechanical materials and methods to complement other Division 15 Sections.

1. Concrete base construction requirements.
2. Escutcheons.
3. Dielectric fittings.
4. Flexible connectors.
5. Mechanical sleeve seals.
6. Nonshrink grout for equipment installations.
7. Field-fabricated metal and wood equipment supports.
8. Mechanical demolition.
9. Cutting and patching.
10. Touchup painting and finishing.

1.3 DEFINITIONS

A. Finished Spaces: Spaces other than mechanical and electrical equipment rooms, furred spaces, pipe and duct shafts, unheated spaces immediately below roof, spaces above ceilings, unexcavated spaces, crawl spaces, and tunnels.

B. Exposed, Interior Installations: Exposed to view indoors. Examples include finished occupied spaces and mechanical equipment rooms.

C. Exposed, Exterior Installations: Exposed to view outdoors, or subject to outdoor ambient temperatures and weather conditions. Examples include rooftop locations.

D. Concealed, Interior Installations: Concealed from view and protected from physical contact by building occupants. Examples include above ceilings and in duct shafts.

E. Concealed, Exterior Installations: Concealed from view and protected from weather conditions and physical contact by building occupants, but subject to outdoor ambient temperatures. Examples include installations within unheated shelters.

1.4 SUBMITTALS

A. Product Data: For dielectric fittings, flexible connectors, mechanical sleeve seals, and identification materials and devices.

1.5 QUALITY ASSURANCE

A. Equipment Selection: Equipment of higher electrical characteristics, physical dimensions, capacities, and ratings may be furnished provided such proposed equipment is approved in writing and connecting mechanical and electrical services, circuit breakers, conduit, motors, bases, and equipment spaces are increased. Additional costs shall be approved in advance by appropriate Contract Modification for these increases. If minimum energy ratings or efficiencies of equipment are specified, equipment must meet design and commissioning requirements.

1.6 DELIVERY, STORAGE, AND HANDLING

A. Deliver pipes and tubes with factory-applied end caps. Maintain end caps through shipping, storage, and handling to prevent pipe end damage and prevent entrance of dirt, debris, and moisture.

B. Protect stored pipes and tubes from moisture and dirt. Elevate above grade. Do not exceed structural capacity of floor, if stored inside.

C. Protect flanges, fittings, and piping specialties from moisture and dirt.

D. Store plastic pipes protected from direct sunlight. Support to prevent sagging and bending.

1.7 SEQUENCING AND SCHEDULING

A. Coordinate mechanical equipment installation with other building components.

B. Arrange for pipe spaces, chases, slots, and openings in building structure during progress of construction to allow for mechanical installations.

C. Coordinate installation of required supporting devices and set sleeves in poured-in-place concrete and other structural components, as they are constructed.

D. Sequence, coordinate, and integrate installations of mechanical materials and equipment for efficient flow of the Work. Coordinate installation of large equipment requiring positioning before closing in building.

E. Coordinate connection of mechanical systems with exterior underground and overhead utilities and services. Comply with requirements of governing regulations, franchised service companies, and controlling agencies.

F. Coordinate requirements for access panels and doors if mechanical items requiring access are concealed behind finished surfaces.

G. Coordinate installation of identifying devices after completing covering and painting, if devices are applied to surfaces. Install identifying devices before installing acoustical ceilings and similar concealment.

PART 2 - PRODUCTS

2.1 DIELECTRIC FITTINGS

A. General: Assembly or fitting with insulating material isolating joined dissimilar metals, to prevent galvanic action and stop corrosion.

B. Description: Combination of copper alloy and ferrous; threaded, solder, plain, and weld-neck end types and matching piping system materials.

C. Insulating Material: Suitable for system fluid, pressure, and temperature.

2.2 FLEXIBLE CONNECTORS

A. General: Fabricated from materials suitable for system fluid and that will provide flexible pipe connections. Include 125-psig minimum working-pressure rating, unless higher working pressure is indicated, and ends according to the following:

1. 2-Inch NPS and Smaller: Threaded.
2. 2-1/2-Inch NPS and Larger: Flanged.
3. Option for 2-1/2-Inch NPS and Larger: Grooved for use with keyed couplings.

B. Bronze-Hose, Flexible Connectors: Corrugated, bronze, inner tubing covered with bronze wire braid. Include copper-tube ends or bronze flanged ends, braze welded to hose.

C. Stainless-Steel-Hose/Steel Pipe, Flexible Connectors: Corrugated, stainless-steel, inner tubing covered with stainless-steel wire braid. Include steel nipples or flanges, welded to hose.

D. Stainless-Steel-Hose/Stainless-Steel Pipe, Flexible Connectors: Corrugated, stainless-steel, inner tubing covered with stainless-steel wire braid. Include stainless-steel nipples or flanges, welded to hose.

E. Rubber, Flexible Connectors: CR or EPDM elastomer rubber construction, with multiple plies of NP fabric, molded and cured in hydraulic presses. Include 125-psig minimum working-pressure rating at 220 deg F. Units may be straight or elbow type, unless otherwise indicated.

2.3 MECHANICAL SLEEVE SEALS

A. Description: Modular design, with interlocking rubber links shaped to continuously fill annular space between pipe and sleeve. Include connecting bolts and pressure plates.

2.4 PIPING SPECIALTIES

A. Sleeves: The following materials are for wall, floor, slab, and roof penetrations:

1. Steel Sheet Metal: 0.0239-inch minimum thickness, galvanized, round tube closed with welded longitudinal joint.
2. Steel Pipe: ASTM A 53, Type E, Grade A, Schedule 40, galvanized, plain ends.
3. Cast Iron: Cast or fabricated "wall pipe" equivalent to ductile-iron pressure pipe, with plain ends and integral waterstop, unless otherwise indicated.
4. Stack Sleeve Fittings: Manufactured, cast-iron sleeve with integral clamping flange. Include clamping ring and bolts and nuts for membrane flashing.

    a. Underdeck Clamp: Clamping ring with set screws.

5. PVC: Manufactured, permanent, with nailing flange for attaching to wooden forms.
6. PVC Pipe: ASTM D 1785, Schedule 40.
7. PE: Manufactured, reusable, tapered, cup shaped, smooth outer surface, with nailing flange for attaching to wooden forms.

B. Escutcheons: Manufactured wall, ceiling, and floor plates; deep-pattern type if required to conceal protruding fittings and sleeves.

1. ID: Closely fit around pipe, tube, and insulation of insulated piping.
2. OD: Completely cover opening.
3. Cast Brass: One piece, with set screw.

    a. Finish: Rough brass.
    b. Finish: Polished chrome-plate.

4. Cast Brass: Split casting, with concealed hinge and set screw.

    a. Finish: Rough brass.
    b. Finish: Polished chrome-plate.

5. Stamped Steel: One piece, with set screw and chrome-plated finish.
6. Stamped Steel: One piece, with spring clips and chrome-plated finish.
7. Stamped Steel: Split plate, with concealed hinge, set screw, and chrome-plated finish.
8. Stamped Steel: Split plate, with concealed hinge, spring clips, and chrome-plated finish.
9. Stamped Steel: Split plate, with exposed-rivet hinge, set screw, and chrome-plated finish.
10. Stamped Steel: Split plate, with exposed-rivet hinge, spring clips, and chrome-plated finish.
11. Cast-Iron Floor Plate: One-piece casting.

2.5 IDENTIFYING DEVICES AND LABELS

A. General: Manufacturer's standard products of categories and types required for each application as referenced in other Division 15 Sections. If more than one type is specified for application, selection is Installer's option, but provide one selection for each product category.

2.6 GROUT

A. Nonshrink, Nonmetallic Grout: ASTM C 1107, Grade B.

1. Characteristics: Post-hardening, volume-adjusting, dry, hydraulic-cement grout, nonstaining, noncorrosive, nongaseous, and recommended for interior and exterior applications.
2. Design Mix: 5000-psig, 28-day compressive strength.
3. Packaging: Premixed and factory packaged.

PART 3 - EXECUTION

3.1 PIPING SYSTEMS - COMMON REQUIREMENTS

A. General: Install piping as described below, unless piping Sections specify otherwise. Individual Division 15 piping Sections specify unique piping installation requirements.

B. General Locations and Arrangements: Drawing plans, schematics, and diagrams indicate general location and arrangement of piping systems. Indicated locations and arrangements were used to size pipe and calculate friction loss, expansion, pump sizing, and other design considerations. Install piping as indicated, unless deviations to layout are approved on Coordination Drawings.

C. Install pipe escutcheons for pipe penetrations of concrete and masonry walls, wall board partitions, and suspended ceilings according to the following:

1. Chrome-Plated Piping: Cast brass, one piece, with set screw, and polished chrome-plated finish. Use split-casting escutcheons if required, for existing piping.
2. Uninsulated Piping Wall Escutcheons: Cast brass or stamped steel, with set screw.
3. Uninsulated Piping Floor Plates in Utility Areas: Cast-iron floor plates.
4. Insulated Piping: Cast brass or stamped steel; with concealed hinge, spring clips, and chrome-plated finish.
5. Piping in Utility Areas: Cast brass or stamped steel, with set-screw or spring clips.

D. Sleeves are not required for core drilled holes.

E. Permanent sleeves are not required for holes formed by PE removable sleeves.

F. Install sleeves for pipes passing through concrete and masonry walls, and concrete floor and roof slabs.

G. Install sleeves for pipes passing through concrete and masonry walls, gypsum-board partitions, and concrete floor and roof slabs.

1. Cut sleeves to length for mounting flush with both surfaces.

   a. Exception: Extend sleeves installed in floors of mechanical equipment areas or other wet areas 2 inches above finished floor level. Extend cast-iron sleeve fittings below floor slab as required to secure clamping ring if ring is specified.

2. Build sleeves into new walls and slabs as work progresses.
3. Install sleeves large enough to provide 1/4-inch annular clear space between sleeve and pipe or pipe insulation. Use the following sleeve materials:

   a. PVC Pipe Sleeves: For pipes smaller than 6-inch NPS.
   b. Steel Pipe Sleeves: For pipes smaller than 6-inch NPS.
   c. Steel, Sheet-Metal Sleeves: For pipes 6-inch NPS and larger, penetrating gypsum-board partitions.
   d. Stack Sleeve Fittings: For pipes penetrating floors with membrane waterproofing. Secure flashing between clamping flanges. Install section of cast-iron soil pipe to extend sleeve to 2 inches above finished floor level. Refer to Division 7 Section "Sheet Metal Flashing and Trim" for flashing.

      1) Seal space outside of sleeve fittings with nonshrink, nonmetallic grout.

4. Except for underground wall penetrations, seal annular space between sleeve and pipe or pipe insulation, using elastomeric joint sealants. Refer to Division 7 Section "Joint Sealants" for materials.
5. Use Type S, Grade NS, Class 25, Use O, neutral-curing silicone sealant, unless otherwise indicated.

H. Aboveground, Exterior-Wall, Pipe Penetrations: Seal penetrations using sleeves and mechanical sleeve seals. Size sleeve for 1-inch annular clear space between pipe and sleeve for installing mechanical sleeve seals.

1. Install steel pipe for sleeves smaller than 6 inches in diameter.
2. Install cast-iron "wall pipes" for sleeves 6 inches in diameter and larger.
3. Assemble and install mechanical sleeve seals according to manufacturer's written instructions. Tighten bolts that cause rubber sealing elements to expand and make watertight seal.

I. Underground, Exterior-Wall, Pipe Penetrations: Install cast-iron "wall pipes" for sleeves. Seal pipe penetrations using mechanical sleeve seals. Size sleeve for 1-inch annular clear space between pipe and sleeve for installing mechanical sleeve seals.

1. Assemble and install mechanical sleeve seals according to manufacturer's written instructions. Tighten bolts that cause rubber sealing elements to expand and make watertight seal.

J. Fire-Barrier Penetrations: Maintain indicated fire rating of walls, partitions, ceilings, and floors at pipe penetrations. Seal pipe penetrations with firestopping materials. Refer to Division 7 Section "Firestopping" for materials.

K. Verify final equipment locations for roughing-in.

L. Refer to equipment specifications in other Sections of these Specifications for roughing-in requirements.

3.2 EQUIPMENT INSTALLATION - COMMON REQUIREMENTS

A. Install equipment to provide maximum possible headroom, if mounting heights are not indicated.

B. Install equipment according to approved submittal data. Portions of the Work are shown only in diagrammatic form. Refer conflicts to Architect.

C. Install equipment level and plumb, parallel and perpendicular to other building systems and components in exposed interior spaces, unless otherwise indicated.

D. Install mechanical equipment to facilitate service, maintenance, and repair or replacement of components. Connect equipment for ease of disconnecting, with minimum interference to other installations. Extend grease fittings to accessible locations.

E. Install equipment giving right of way to piping installed at required slope.

F. Install flexible connectors on equipment side of shutoff valves, horizontally and parallel to equipment shafts if possible.

3.3 PAINTING AND FINISHING

A. Apply paint to exposed piping according to the following, unless otherwise indicated:

1. Interior, Ferrous Piping: Use semigloss, acrylic-enamel finish. Include finish coat over enamel undercoat and primer.
2. Interior, Galvanized-Steel Piping: Use semigloss, acrylic-enamel finish. Include two finish coats over galvanized metal primer.
3. Interior, Ferrous Supports: Use semigloss, acrylic-enamel finish. Include finish coat over enamel undercoat and primer.
4. Exterior, Ferrous Piping: Use semigloss, acrylic-enamel finish. Include two finish coats over rust-inhibitive metal primer.
5. Exterior, Galvanized-Steel Piping: Use semigloss, acrylic-enamel finish. Include two finish coats over galvanized metal primer.
6. Exterior, Ferrous Supports: Use semigloss, acrylic-enamel finish. Include two finish coats over rust-inhibitive metal primer.

B. Do not paint piping specialties with factory-applied finish.

C. Damage and Touchup: Repair marred and damaged factory-painted finishes with materials and procedures to match original factory finish.

3.4 CONCRETE BASES

A. Construct concrete bases of dimensions indicated, but not less than 4 inches larger in both directions than supported unit. Follow supported equipment manufacturer's setting templates for anchor bolt and tie locations. Use 3000-psig, 28-day compressive-strength concrete and reinforcement.

3.5 ERECTION OF METAL SUPPORTS AND ANCHORAGE

A. Cut, fit, and place miscellaneous metal supports accurately in location, alignment, and elevation to support and anchor mechanical materials and equipment.

B. Field Welding: Comply with AWS D1.1, "Structural Welding Code--Steel."

3.6 ERECTION OF WOOD SUPPORTS AND ANCHORAGE

A. Cut, fit, and place wood grounds, nailers, blocking, and anchorage to support and anchor mechanical materials and equipment.

B. Select fastener sizes that will not penetrate members if opposite side will be exposed to view or will receive finish materials. Tighten connections between members. Install fasteners without splitting wood members.

C. Attach to substrates as required to support applied loads.

3.7 DEMOLITION

A. Disconnect, demolish, and remove Work specified in Division 15 Sections.

B. If pipe, ductwork, insulation, or equipment to remain is damaged or disturbed, remove damaged portions and install new products of equal capacity and quality.

C. Accessible Work: Remove indicated exposed pipe and ductwork in its entirety.

D. Work Abandoned in Place: Cut and remove underground pipe a minimum of 2 inches beyond face of adjacent construction. Cap and patch surface to match existing finish.

E. Removal: Remove indicated equipment from Project site.

F. Temporary Disconnection: Remove, store, clean, reinstall, reconnect, and make operational equipment indicated for relocation.

3.8 CUTTING AND PATCHING

A. Cut, channel, chase, and drill floors, walls, partitions, ceilings, and other surfaces necessary for mechanical installations. Perform cutting by skilled mechanics of trades involved.

B. Repair cut surfaces to match adjacent surfaces.

3.9 GROUTING

A. Install nonmetallic, nonshrink, grout for mechanical equipment base bearing surfaces, pump and other equipment base plates, and anchors. Mix grout according to manufacturer's written instructions.

B. Clean surfaces that will come into contact with grout.

C. Provide forms as required for placement of grout.

D. Avoid air entrapment during placing of grout.

E. Place grout, completely filling equipment bases.

F. Place grout on concrete bases to provide smooth bearing surface for equipment.

G. Place grout around anchors.

H. Cure placed grout according to manufacturer's written instructions.

END OF SECTION 23 0000

SECTION 23 0553 - IDENTIFICATION FOR HVAC PIPING AND EQUIPMENT

PART 1 - GENERAL

1.1 RELATED DOCUMENTS

A. Drawings and general provisions of the Contract, including General and Supplementary Conditions and Division 1 Specification Sections, apply to this Section.

1.2 SUMMARY

A. This Section includes the following mechanical identification materials and their installation:

1. Equipment nameplates.
2. Equipment markers.
3. Equipment signs.
4. Access panel and door markers.
5. Pipe markers.
6. Duct markers.
7. Stencils.
8. Valve tags.
9. Valve schedules.
10. Warning tags.

1.3 SUBMITTALS

A. Product Data: For each type of product indicated.

B. Samples: For color, letter style, and graphic representation required for each identification material and device.

C. Valve numbering scheme.

D. Valve Schedules: For each piping system. Furnish extra copies (in addition to mounted copies) to include in maintenance manuals.

1.4 QUALITY ASSURANCE

A. ASME Compliance: Comply with ASME A13.1, "Scheme for the Identification of Piping Systems," for letter size, length of color field, colors, and viewing angles of identification devices for piping.

1.5 COORDINATION

A. Coordinate installation of identifying devices with completion of covering and painting of surfaces where devices are to be applied.

B. Coordinate installation of identifying devices with location of access panels and doors.

C. Install identifying devices before installing acoustical ceilings and similar concealment.

PART 2 - PRODUCTS

2.1 EQUIPMENT IDENTIFICATION DEVICES

A. Equipment Nameplates: Metal, with data engraved or stamped, for permanent attachment on equipment.

1. Data:

a. Manufacturer, product name, model number, and serial number.
b. Capacity, operating and power characteristics, and essential data.
c. Labels of tested compliances.

2. Location: Accessible and visible.
3. Fasteners: As required to mount on equipment.

B. Equipment Markers: Engraved, color-coded laminated plastic. Include contact-type, permanent adhesive.

1. Terminology: Match schedules as closely as possible.
2. Data:

a. Name and plan number.
b. Equipment service.
c. Design capacity.
d. Other design parameters such as pressure drop, entering and leaving conditions, and speed.

3. Size: 2-1/2 by 4 inches for control devices, dampers, and valves; 4-1/2 by 6 inches for equipment.

C. Equipment Signs: ASTM D 709, Type I, cellulose, paper-base, phenolic-resin-laminate engraving stock; Grade ES-2, black surface, black phenolic core, with white melamine subcore, unless otherwise indicated. Fabricate in sizes required for message. Provide holes for mechanical fastening.

1. Data: Instructions for operation of equipment and for safety procedures.

2. Engraving: Manufacturer's standard letter style, of sizes and with terms to match equipment identification.
3. Thickness: 1/16 inch for units up to 20 sq. in. or 8 inches in length, and 1/8 inch for larger units.
4. Fasteners: Self-tapping, stainless-steel screws or contact-type, permanent adhesive.

D. Access Panel and Door Markers: 1/16-inch thick, engraved laminated plastic, with abbreviated terms and numbers corresponding to identification. Provide 1/8-inch center hole for attachment.

1. Fasteners: Self-tapping, stainless-steel screws or contact-type, permanent adhesive.

2.2 PIPING IDENTIFICATION DEVICES

A. Manufactured Pipe Markers, General: Preprinted, color-coded, with lettering indicating service, and showing direction of flow.

1. Colors: Comply with ASME A13.1, unless otherwise indicated.
2. Lettering: Use piping system terms indicated and abbreviate only as necessary for each application length.
3. Pipes with OD, Including Insulation, Less Than 6 Inches: Full-band pipe markers extending 360 degrees around pipe at each location.
4. Pipes with OD, Including Insulation, 6 Inches and Larger: Either full-band or strip-type pipe markers at least three times letter height and of length required for label.
5. Arrows: Integral with piping system service lettering to accommodate both directions; or as separate unit on each pipe marker to indicate direction of flow.

B. Pretensioned Pipe Markers: Precoiled semirigid plastic formed to cover full circumference of pipe and to attach to pipe without adhesive.

C. Shaped Pipe Markers: Preformed semirigid plastic formed to partially cover circumference of pipe and to attach to pipe with mechanical fasteners that do not penetrate insulation vapor barrier.

D. Self-Adhesive Pipe Markers: Plastic with pressure-sensitive, permanent-type, self-adhesive back.

E. Plastic Tape: Continuously printed, vinyl tape at least 3 mils thick with pressure-sensitive, permanent-type, self-adhesive back.

1. Width for Markers on Pipes with OD, Including Insulation, Less Than 6 Inches: 3/4 inch minimum.
2. Width for Markers on Pipes with OD, Including Insulation, 6 Inches or Larger: 1-1/2 inches minimum.

2.3 DUCT IDENTIFICATION DEVICES

A. Duct Markers: Engraved, color-coded laminated plastic. Include direction and quantity of airflow and duct service (such as supply, return, and exhaust). Include contact-type, permanent adhesive.

2.4 STENCILS

A. Stencils: Prepared with letter sizes according to ASME A13.1 for piping; minimum letter height of 1-1/4 inches for ducts; and minimum letter height of 3/4 inch for access panel and door markers, equipment markers, equipment signs, and similar operational instructions.

1. Stencil Material: Metal or fiberboard.
2. Stencil Paint: Exterior, gloss, alkyd enamel black, unless otherwise indicated. Paint may be in pressurized spray-can form.
3. Identification Paint: Exterior, alkyd enamel in colors according to ASME A13.1, unless otherwise indicated.

2.5 VALVE TAGS

A. Valve Tags: Stamped or engraved with 1/4-inch letters for piping system abbreviation and 1/2-inch numbers, with numbering scheme. Provide 5/32-inch hole for fastener.

1. Material: 0.032-inch thick brass or aluminum.
2. Material: 0.0375-inch thick stainless steel.
3. Material: 3/32-inch thick laminated plastic with 2 black surfaces and white inner layer.
4. Valve-Tag Fasteners: Brass wire-link or beaded chain; or S-hook.

2.6 VALVE SCHEDULES

A. Valve Schedules: For each piping system, on standard-size bond paper. Tabulate valve number, piping system, system abbreviation (as shown on valve tag), location of valve (room or space), normal-operating position (open, closed, or modulating), and variations for identification. Mark valves for emergency shutoff and similar special uses.

1. Valve-Schedule Frames: Glazed display frame for removable mounting on masonry walls for each page of valve schedule. Include mounting screws.
2. Frame: Extruded aluminum.
3. Glazing: ASTM C 1036, Type I, Class 1, Glazing Quality B, 2.5-mm, single-thickness glass.

2.7 WARNING TAGS

A. Warning Tags: Preprinted or partially preprinted, accident-prevention tags; of plasticized card stock with matte finish suitable for writing.

1. Size: 3 by 5-1/4 inches minimum.
2. Fasteners: Brass grommet and wire.
3. Nomenclature: Large-size primary caption such as DANGER, CAUTION, or DO NOT OPERATE.
4. Color: Yellow background with black lettering.

PART 3 - EXECUTION

3.1 APPLICATIONS, GENERAL

A. Products specified are for applications referenced in other Division 15 Sections. If more than single-type material, device, or label is specified for listed applications, selection is Installer's option.

3.2 EQUIPMENT IDENTIFICATION

A. Install and permanently fasten equipment nameplates on each major item of mechanical equipment that does not have nameplate or has nameplate that is damaged or located where not easily visible. Locate nameplates where accessible and visible. Include nameplates for the following general categories of equipment:

1. Fuel-burning units, including boilers, furnaces, heaters, stills, and absorption units.
2. Pumps, compressors, chillers, condensers, and similar motor-driven units.
3. Heat exchangers, coils, evaporators, cooling towers, heat recovery units, and similar equipment.
4. Fans, blowers, primary balancing dampers, and mixing boxes.
5. Packaged HVAC central-station and zone-type units.

B. Install equipment markers with permanent adhesive on or near each major item of mechanical equipment. Data required for markers may be included on signs, and markers may be omitted if both are indicated.

1. Letter Size: Minimum 1/4 inch for name of units if viewing distance is less than 24 inches, 1/2 inch for viewing distances up to 72 inches, and proportionately larger lettering for greater viewing distances. Include secondary lettering two-thirds to three-fourths the size of principal lettering.
2. Data: Distinguish among multiple units, indicate operational requirements, indicate safety and emergency precautions, warn of hazards and improper operations, and identify units.

3. Locate markers where accessible and visible. Include markers for the following general categories of equipment:

    a. Main control and operating valves, including safety devices and hazardous units such as gas outlets.
    b. Fire department hose valves and hose stations.
    c. Meters, gages, thermometers, and similar units.
    d. Fuel-burning units, including boilers, furnaces, heaters, stills, and absorption units.
    e. Pumps, compressors, chillers, condensers, and similar motor-driven units.
    f. Heat exchangers, coils, evaporators, cooling towers, heat recovery units, and similar equipment.
    g. Fans, blowers, primary balancing dampers, and mixing boxes.
    h. Packaged HVAC central-station and zone-type units.
    i. Tanks and pressure vessels.
    j. Strainers, filters, humidifiers, water-treatment systems, and similar equipment.

C. Stenciled Equipment Marker Option: Stenciled markers may be provided instead of laminated-plastic equipment markers, at Installer's option, if lettering larger than 1 inch high is needed for proper identification because of distance from normal location of required identification.

D. Install equipment signs with screws or permanent adhesive on or near each major item of mechanical equipment. Locate signs where accessible and visible.

1. Identify mechanical equipment with equipment markers in the following color codes:

    a. Green: For cooling equipment and components.
    b. Yellow: For heating equipment and components.
    c. Green and Yellow: For combination cooling and heating equipment and components.
    d. Brown: For energy-reclamation equipment and components.

2. Letter Size: Minimum 1/4 inch for name of units if viewing distance is less than 24 inches, 1/2 inch for viewing distances up to 72 inches, and proportionately larger lettering for greater viewing distances. Include secondary lettering two-thirds to three-fourths the size of principal lettering.
3. Data: Distinguish among multiple units, indicate operational requirements, indicate safety and emergency precautions, warn of hazards and improper operations, and identify units.
4. Include signs for the following general categories of equipment:

    a. Main control and operating valves, including safety devices and hazardous units such as gas outlets.
    b. Fuel-burning units, including boilers, furnaces, heaters, stills, and absorption units.
    c. Pumps, compressors, chillers, condensers, and similar motor-driven units.
    d. Heat exchangers, coils, evaporators, cooling towers, heat recovery units, and similar equipment.
    e. Fans, blowers, primary balancing dampers, and mixing boxes.
    f. Packaged HVAC central-station and zone-type units.
    g. Tanks and pressure vessels.

h. Strainers, filters, humidifiers, water-treatment systems, and similar equipment.

E. Stenciled Equipment Sign Option: Stenciled signs may be provided instead of laminated-plastic equipment signs, at Installer's option, if lettering larger than 1 inch high is needed for proper identification because of distance from normal location of required identification.

F. Install access panel markers with screws on equipment access panels.

3.3 PIPING IDENTIFICATION

A. Install manufactured pipe markers indicating service on each piping system. Install with flow indication arrows showing direction of flow.

1. Pipes with OD, Including Insulation, Less Than 6 Inches: Pretensioned pipe markers. Use size to ensure a tight fit.
2. Pipes with OD, Including Insulation, Less Than 6 Inches: Self-adhesive pipe markers. Use color-coded, self-adhesive plastic tape, 1-1/2 inches wide, lapped at least 1-1/2 inches at both ends of pipe marker, and covering full circumference of pipe.
3. Pipes with OD, Including Insulation, 6 Inches and Larger: Shaped pipe markers. Use size to match pipe and secure with fasteners.
4. Pipes with OD, Including Insulation, 6 Inches and Larger: Self-adhesive pipe markers. Use color-coded, self-adhesive plastic tape, at least 1-1/2 inches wide, lapped at least 3 inches at both ends of pipe marker, and covering full circumference of pipe.

B. Stenciled Pipe Marker Option: Stenciled markers may be provided instead of manufactured pipe markers, at Installer's option. Install stenciled pipe markers complying with ASME A13.1 on each piping system.

1. Identification Paint: Use for contrasting background.
2. Stencil Paint: Use for pipe marking.

C. Locate pipe markers and color bands where piping is exposed in finished spaces; machine rooms; accessible maintenance spaces such as shafts, tunnels, and plenums; and exterior nonconcealed locations as follows:

1. Near each valve and control device.
2. Near each branch connection, excluding short takeoffs for fixtures and terminal units. Where flow pattern is not obvious, mark each pipe at branch.
3. Near penetrations through walls, floors, ceilings, and nonaccessible enclosures.
4. At access doors, manholes, and similar access points that permit view of concealed piping.
5. Near major equipment items and other points of origination and termination.
6. Spaced at maximum intervals of 50 feet along each run. Reduce intervals to 25 feet in areas of congested piping and equipment.
7. On piping above removable acoustical ceilings. Omit intermediately spaced markers.

3.4 DUCT IDENTIFICATION

A. Install duct markers with permanent adhesive on air ducts in the following color codes:

1. Green: For cold-air supply ducts.
2. Yellow: For hot-air supply ducts.
3. Blue: For exhaust-, outside-, relief-, return-, and mixed-air ducts.
4. ASME A13.1 Colors and Designs: For hazardous material exhaust.
5. Letter Size: Minimum 1/4 inch for name of units if viewing distance is less than 24 inches, 1/2 inch for viewing distances up to 72 inches, and proportionately larger lettering for greater viewing distances. Include secondary lettering two-thirds to three-fourths the size of principal lettering.

B. Stenciled Duct Marker Option: Stenciled markers, showing service and direction of flow, may be provided instead of laminated-plastic duct markers, at Installer's option, if lettering larger than 1 inch high is needed for proper identification because of distance from normal location of required identification.

C. Locate markers near points where ducts enter into concealed spaces and at maximum intervals of 50 feet in each space where ducts are exposed or concealed by removable ceiling system.

3.5 VALVE-TAG INSTALLATION

A. Install tags on valves and control devices in piping systems, except check valves; valves within factory-fabricated equipment units; plumbing fixture supply stops; shutoff valves; faucets; convenience and lawn-watering hose connections; and HVAC terminal devices and similar roughing-in connections of end-use fixtures and units. List tagged valves in a valve schedule.

B. Valve-Tag Application Schedule: Tag valves according to size, shape, and color scheme and with captions similar to those indicated in the following:

1. Valve-Tag Size and Shape:

   a. Cold Water: 1-1/2 inches, round.
   b. Hot Water: 1-1/2 inches, round.
   c. Fire Protection: 1-1/2 inches, round.
   d. Gas: 1-1/2 inches, round.
   e. Steam: 1-1/2 inches, round.

3.6 VALVE-SCHEDULE INSTALLATION

A. Mount valve schedule on wall in accessible location in each major equipment room.

3.7 WARNING-TAG INSTALLATION

A. Write required message on, and attach warning tags to, equipment and other items where required.

3.8 ADJUSTING

A. Relocate mechanical identification materials and devices that have become visually blocked by other work.

3.9 CLEANING

A. Clean faces of mechanical identification devices and glass frames of valve schedules.

END OF SECTION 23 0553

SECTION 23 0593 - TESTING, ADJUSTING, AND BALANCING FOR HVAC

PART 1 - GENERAL

1.1 RELATED DOCUMENTS

A. Drawings and general provisions of the Contract, including General and Supplementary Conditions and Division 1 Specification Sections, apply to this Section.

1.2 SUMMARY

A. This Section includes testing, adjusting, and balancing HVAC systems to produce design objectives, including the following:

1. Balancing airflow and water flow within distribution systems, including submains, branches, and terminals, to indicated quantities according to specified tolerances.
2. Adjusting total HVAC systems to provide indicated quantities.
3. Measuring electrical performance of HVAC equipment.
4. Setting quantitative performance of HVAC equipment.
5. Verifying that automatic control devices are functioning properly.
6. Measuring sound and vibration.
7. Reporting results of the activities and procedures specified in this Section.

B. Related Sections include the following:

1. Testing and adjusting requirements unique to particular systems and equipment are included in the Sections that specify those systems and equipment.
2. Field quality-control testing to verify that workmanship quality for system and equipment installation is specified in system and equipment Sections.

1.3 DEFINITIONS

A. Adjust: To regulate fluid flow rate and air patterns at the terminal equipment, such as to reduce fan speed or adjust a damper.

B. Balance: To proportion flows within the distribution system, including submains, branches, and terminals, according to design quantities.

C. Draft: A current of air, when referring to localized effect caused by one or more factors of high air velocity, low ambient temperature, or direction of airflow, whereby more heat is withdrawn from a person's skin than is normally dissipated.

D. Procedure: An approach to and execution of a sequence of work operations to yield repeatable results.

E. Report Forms: Test data sheets for recording test data in logical order.

F. Static Head: The pressure due to the weight of the fluid above the point of measurement. In a closed system, static head is equal on both sides of the pump.

G. Suction Head: The height of fluid surface above the centerline of the pump on the suction side.

H. System Effect: A phenomenon that can create undesired or unpredicted conditions that cause reduced capacities in all or part of a system.

I. System Effect Factors: Allowances used to calculate a reduction of the performance ratings of a fan when installed under conditions different from those presented when the fan was performance tested.

J. Terminal: A point where the controlled medium, such as fluid or energy, enters or leaves the distribution system.

K. Test: A procedure to determine quantitative performance of a system or equipment.

L. Testing, Adjusting, and Balancing Agent: The entity responsible for performing and reporting the testing, adjusting, and balancing procedures.

M. AABC: Associated Air Balance Council.

N. AMCA: Air Movement and Control Association.

O. CTI: Cooling Tower Institute.

P. NEBB: National Environmental Balancing Bureau.

Q. SMACNA: Sheet Metal and Air Conditioning Contractors' National Association.

1.4 SUBMITTALS

A. Quality-Assurance Submittals: Within 30 days from the Contractor's Notice to Proceed, submit 2 copies of evidence that the testing, adjusting, and balancing Agent and this Project's testing, adjusting, and balancing team members meet the qualifications specified in the "Quality Assurance" Article below.

B. Contract Documents Examination Report: Within 45 days from the Contractor's Notice to Proceed, submit 2 copies of the Contract Documents review report as specified in Part 3 of this Section.

C. Strategies and Procedures Plan: Within 60 days from the Contractor's Notice to Proceed, submit 2 copies of the testing, adjusting, and balancing strategies and step-by-step procedures as specified in Part 3 "Preparation" Article below. Include a complete set of report forms intended for use on this Project.

D. Certified Testing, Adjusting, and Balancing Reports: Submit 2 copies of reports prepared, as specified in this Section, on approved forms certified by the testing, adjusting, and balancing Agent.

E. Sample Report Forms: Submit 2 sets of sample testing, adjusting, and balancing report forms.

F. Warranty: Submit 2 copies of special warranty specified in the "Warranty" Article below.

1.5 QUALITY ASSURANCE

A. Agent Qualifications: Engage a testing, adjusting, and balancing agent certified by AABC.

B. Agent Qualifications: Engage a testing, adjusting, and balancing agent certified by NEBB.

C. Agent Qualifications: Engage a testing, adjusting, and balancing agent certified by either AABC or NEBB.

D. Testing, Adjusting, and Balancing Conference: Meet with the Owner's and the Architect's representatives on approval of the testing, adjusting, and balancing strategies and procedures plan to develop a mutual understanding of the details. Ensure the participation of testing, adjusting, and balancing team members, equipment manufacturers' authorized service representatives, HVAC controls Installer, and other support personnel. Provide 7 days' advance notice of scheduled meeting time and location.

1. Agenda Items: Include at least the following:

a. Submittal distribution requirements.
b. Contract Documents examination report.
c. Testing, adjusting, and balancing plan.
d. Work schedule and Project site access requirements.
e. Coordination and cooperation of trades and subcontractors.
f. Coordination of documentation and communication flow.

E. Certification of Testing, Adjusting, and Balancing Reports: Certify the testing, adjusting, and balancing field data reports. This certification includes the following:

1. Review field data reports to validate accuracy of data and to prepare certified testing, adjusting, and balancing reports.
2. Certify that the testing, adjusting, and balancing team complied with the approved testing, adjusting, and balancing plan and the procedures specified and referenced in this Specification.

F. Testing, Adjusting, and Balancing Reports: Use standard forms from AABC's "National Standards for Testing, Adjusting, and Balancing."

G. Testing, Adjusting, and Balancing Reports: Use standard forms from NEBB's "Procedural Standards for Testing, Adjusting, and Balancing of Environmental Systems."

H. Testing, Adjusting, and Balancing Reports: Use standard forms from SMACNA's "HVAC Systems--Testing, Adjusting, and Balancing."

I. Testing, Adjusting, and Balancing Reports: Use testing, adjusting, and balancing Agent's standard forms approved by the Architect.

J. Instrumentation Type, Quantity, and Accuracy: As described in AABC national standards.

K. Instrumentation Type, Quantity, and Accuracy: As described in NEBB's "Procedural Standards for Testing, Adjusting, and Balancing of Environmental Systems," Section II, "Required Instrumentation for NEBB Certification."

L. Instrumentation Calibration: Calibrate instruments at least every 6 months or more frequently if required by the instrument manufacturer.

1.6 PROJECT CONDITIONS

A. Full Owner Occupancy: The Owner will occupy the site and existing building during the entire testing, adjusting, and balancing period. Cooperate with the Owner during testing, adjusting, and balancing operations to minimize conflicts with the Owner's operations.

B. Partial Owner Occupancy: The Owner may occupy completed areas of the building before Substantial Completion. Cooperate with the Owner during testing, adjusting, and balancing operations to minimize conflicts with the Owner's operations.

1.7 COORDINATION

A. Coordinate the efforts of factory-authorized service representatives for systems and equipment, HVAC controls installers, and other mechanics to operate HVAC systems and equipment to support and assist testing, adjusting, and balancing activities.

B. Notice: Provide 7 days' advance notice for each test. Include scheduled test dates and times.

C. Perform testing, adjusting, and balancing after leakage and pressure tests on air and water distribution systems have been satisfactorily completed.

1.8 WARRANTY

A. General Warranty: The national project performance guarantee specified in this Article shall not deprive the Owner of other rights the Owner may have under other provisions of the Contract Documents and shall be in addition to, and run concurrent with, other warranties made by the Contractor under requirements of the Contract Documents.

B. National Project Performance Guarantee: Provide a guarantee on AABC'S "National Standards" forms stating that AABC will assist in completing the requirements of the Contract Documents if the testing, adjusting, and balancing Agent fails to comply with the Contract Documents. Guarantee includes the following provisions:

C. Special Guarantee: Provide a guarantee on NEBB forms stating that NEBB will assist in completing the requirements of the Contract Documents if the testing, adjusting, and balancing Agent fails to comply with the Contract Documents. Guarantee includes the following provisions:

1. The certified Agent has tested and balanced systems according to the Contract Documents.
2. Systems are balanced to optimum performance capabilities within design and installation limits.

PART 2 - PRODUCTS (Not Applicable)

PART 3 - EXECUTION

3.1 EXAMINATION

A. Examine Contract Documents to become familiar with project requirements and to discover conditions in systems' designs that may preclude proper testing, adjusting, and balancing of systems and equipment.

1. Contract Documents are defined in the General and Supplementary Conditions of the Contract.
2. Verify that balancing devices, such as test ports, gage cocks, thermometer wells, flow-control devices, balancing valves and fittings, and manual volume dampers, are required by the Contract Documents. Verify that quantities and locations of these balancing devices are accessible and appropriate for effective balancing and for efficient system and equipment operation.

B. Examine approved submittal data of HVAC systems and equipment.

C. Examine project record documents described in Division 1 Section "Project Record Documents."

D. Examine Architect's and Engineer's design data, including HVAC system descriptions, statements of design assumptions for environmental conditions and systems' output, and statements of philosophies and assumptions about HVAC system and equipment controls.

E. Examine equipment performance data, including fan and pump curves. Relate performance data to project conditions and requirements, including system effects that can create undesired or unpredicted conditions that cause reduced capacities in all or part of a system. Calculate system effect factors to reduce the performance ratings of HVAC equipment when installed under conditions different from those presented when the equipment was performance tested at the factory. To calculate system effects for air systems, use tables and charts found in AMCA 201, "Fans and Systems," Sections 7 through 10; or in SMACNA's "HVAC Systems--Duct Design," Sections 5 and 6. Compare this data with the design data and installed conditions.

F. Examine system and equipment installations to verify that they are complete and that testing, cleaning, adjusting, and commissioning specified in individual Specification Sections have been performed.

G. Examine system and equipment test reports.

H. Examine HVAC system and equipment installations to verify that indicated balancing devices, such as test ports, gage cocks, thermometer wells, flow-control devices, balancing valves and fittings, and manual volume dampers, are properly installed, and their locations are accessible and appropriate for effective balancing and for efficient system and equipment operation.

I. Examine systems for functional deficiencies that cannot be corrected by adjusting and balancing.

J. Examine air-handling equipment to ensure clean filters have been installed, bearings are greased, belts are aligned and tight, and equipment with functioning controls is ready for operation.

K. Examine terminal units, such as variable-air-volume boxes and mixing boxes, to verify that they are accessible and their controls are connected and functioning.

L. Examine plenum ceilings, utilized for supply air, to verify that they are airtight. Verify that pipe penetrations and other holes are sealed.

M. Examine strainers for clean screens and proper perforations.

N. Examine 3-way valves for proper installation for their intended function of diverting or mixing fluid flows.

O. Examine heat-transfer coils for correct piping connections and for clean and straight fins.

P. Examine open-piping-system pumps to ensure absence of entrained air in the suction piping.

Q. Examine equipment for installation and for properly operating safety interlocks and controls.

R. Examine automatic temperature system components to verify the following:

1. Dampers, valves, and other controlled devices operate by the intended controller.
2. Dampers and valves are in the position indicated by the controller.
3. Integrity of valves and dampers for free and full operation and for tightness of fully closed and fully open positions. This includes dampers in multizone units, mixing boxes, and variable-air-volume terminals.
4. Automatic modulating and shutoff valves, including 2-way valves and 3-way mixing and diverting valves, are properly connected.
5. Thermostats and humidistats are located to avoid adverse effects of sunlight, drafts, and cold walls.
6. Sensors are located to sense only the intended conditions.
7. Sequence of operation for control modes is according to the Contract Documents.
8. Controller set points are set at design values. Observe and record system reactions to changes in conditions. Record default set points if different from design values.

9. Interlocked systems are operating.
10. Changeover from heating to cooling mode occurs according to design values.

S. Report deficiencies discovered before and during performance of testing, adjusting, and balancing procedures.

3.2 PREPARATION

A. Prepare a testing, adjusting, and balancing plan that includes strategies and step-by-step procedures.

B. Complete system readiness checks and prepare system readiness reports. Verify the following:

1. Permanent electrical power wiring is complete.
2. Hydronic systems are filled, clean, and free of air.
3. Automatic temperature-control systems are operational.
4. Equipment and duct access doors are securely closed.
5. Balance, smoke, and fire dampers are open.
6. Isolating and balancing valves are open and control valves are operational.
7. Ceilings are installed in critical areas where air-pattern adjustments are required and access to balancing devices is provided.
8. Windows and doors can be closed so design conditions for system operations can be met.

3.3 GENERAL TESTING AND BALANCING PROCEDURES

A. Perform testing and balancing procedures on each system according to the procedures contained in AABC national standards and this Section.

B. Perform testing and balancing procedures on each system according to the procedures contained in NEBB's "Procedural Standards for Testing, Adjusting, and Balancing of Environmental Systems" and this Section.

C. Perform testing and balancing procedures on each system according to the procedures contained in SMACNA's "HVAC Systems--Testing, Adjusting, and Balancing" and this Section.

D. Cut insulation, ducts, pipes, and equipment cabinets for installation of test probes to the minimum extent necessary to allow adequate performance of procedures. After testing and balancing, close probe holes and patch insulation with new materials identical to those removed. Restore vapor barrier and finish according to the insulation Specifications for this Project.

E. Mark equipment settings with paint or other suitable, permanent identification material, including damper-control positions, valve indicators, fan-speed-control levers, and similar controls and devices, to show final settings.

3.4 FUNDAMENTAL AIR SYSTEMS' BALANCING PROCEDURES

A. Prepare test reports for both fans and outlets. Obtain manufacturer's outlet factors and recommended testing procedures. Crosscheck the summation of required outlet volumes with required fan volumes.

B. Prepare schematic diagrams of systems' "as-built" duct layouts.

C. For variable-air-volume systems, develop a plan to simulate diversity.

D. Determine the best locations in main and branch ducts for accurate duct airflow measurements.

E. Check the airflow patterns from the outside-air louvers and dampers and the return- and exhaust-air dampers, through the supply-fan discharge and mixing dampers.

F. Locate start-stop and disconnect switches, electrical interlocks, and motor starters.

G. Verify that motor starters are equipped with properly sized thermal protection.

H. Check dampers for proper position to achieve desired airflow path.

I. Check for airflow blockages.

J. Check condensate drains for proper connections and functioning.

K. Check for proper sealing of air-handling unit components.

3.5 CONSTANT-VOLUME AIR SYSTEMS' BALANCING PROCEDURES

A. The procedures in this Article apply to constant-volume supply-, return-, and exhaust-air systems. Additional procedures are required for variable-air-volume, multizone, dual-duct, induction-unit supply-air systems and process exhaust-air systems. These additional procedures are specified in other articles in this Section.

B. Adjust fans to deliver total design airflows within the maximum allowable rpm listed by the fan manufacturer.

1. Measure fan static pressures to determine actual static pressure as follows:

   a. Measure outlet static pressure as far downstream from the fan as practicable and upstream from restrictions in ducts such as elbows and transitions.
   b. Measure static pressure directly at the fan outlet or through the flexible connection.
   c. Measure inlet static pressure of single-inlet fans in the inlet duct as near the fan as possible, upstream from flexible connection and downstream from duct restrictions.
   d. Measure inlet static pressure of double-inlet fans through the wall of the plenum that houses the fan.

2. Measure static pressure across each air-handling unit component.

    a. Simulate dirty filter operation and record the point at which maintenance personnel must change filters.

3. Measure static pressures entering and leaving other devices such as sound traps, heat recovery equipment, and air washers under final balanced conditions.
4. Compare design data with installed conditions to determine variations in design static pressures versus actual static pressures. Compare actual system effect factors with calculated system effect factors to identify where variations occur. Recommend corrective action to align design and actual conditions.
5. Adjust fan speed higher or lower than design with the approval of the Architect. Make required adjustments to pulley sizes, motor sizes, and electrical connections to accommodate fan-speed changes.
6. Do not make fan-speed adjustments that result in motor overload. Consult equipment manufacturers about fan-speed safety factors. Modulate dampers and measure fan-motor amperage to ensure no overload will occur. Measure amperage in full cooling, full heating, and economizer modes to determine the maximum required brake horsepower.

C. Adjust volume dampers for main duct, submain ducts, and major branch ducts to design airflows within specified tolerances.

1. Measure static pressure at a point downstream from the balancing damper and adjust volume dampers until the proper static pressure is achieved.

    a. Where sufficient space in submains and branch ducts is unavailable for Pitot-tube traverse measurements, measure airflow at terminal outlets and inlets and calculate the total airflow for that zone.

2. Remeasure each submain and branch duct after all have been adjusted. Continue to adjust submains and branch ducts to design airflows within specified tolerances.

D. Measure terminal outlets and inlets without making adjustments.

1. Measure terminal outlets using a direct-reading hood or the outlet manufacturer's written instructions and calculating factors.

E. Adjust terminal outlets and inlets for each space to design airflows within specified tolerances of design values. Make adjustments using volume dampers rather than extractors and the dampers at the air terminals.

1. Adjust each outlet in the same room or space to within specified tolerances of design quantities without generating noise levels above the limitations prescribed by the Contract Documents.
2. Adjust patterns of adjustable outlets for proper distribution without drafts.

3.6 MOTORS

A. Motors, 1/2 HP and Larger: Test at final balanced conditions and record the following data:

1. Manufacturer, model, and serial numbers.
2. Motor horsepower rating.
3. Motor rpm.
4. Efficiency rating if high-efficiency motor.
5. Nameplate and measured voltage, each phase.
6. Nameplate and measured amperage, each phase.
7. Starter thermal-protection-element rating.

B. Motors Driven by Variable-Frequency Controllers: Test for proper operation at speeds varying from minimum to maximum. Test the manual bypass for the controller to prove proper operation. Record observations, including controller manufacturer, model and serial numbers, and nameplate data.

3.7 CONDENSING UNITS

A. Verify proper rotation of fans and measure entering- and leaving-air temperatures. Record compressor data.

3.8 HEAT-TRANSFER COILS

A. Electric-Heating Coils: Measure the following data for each coil:

1. Nameplate data.
2. Airflow.
3. Entering- and leaving-air temperatures at full load.
4. Voltage and amperage input of each phase at full load and at each incremental stage.
5. Calculated kW at full load.
6. Fuse or circuit-breaker rating for overload protection.

3.9 TEMPERATURE TESTING

A. During testing, adjusting, and balancing, report need for adjustment in temperature regulation within the automatic temperature-control system.

B. Measure indoor wet- and dry-bulb temperatures every other hour for a period of 2 successive 8-hour days, in each separately controlled zone, to prove correctness of final temperature settings. Measure when the building or zone is occupied.

C. Measure outside-air, wet- and dry-bulb temperatures.

3.10 VERIFICATION

A. Verify that controllers are calibrated and commissioned.

B. Check transmitter and controller locations and note conditions that would adversely affect control functions.

C. Record controller settings and note variances between set points and actual measurements.

D. Verify operation of limiting controllers (i.e., high- and low-temperature controllers).

E. Verify free travel and proper operation of control devices such as damper and valve operators.

F. Verify sequence of operation of control devices. Note air pressures and device positions and correlate with airflow and water-flow measurements. Note the speed of response to input changes.

G. Confirm interaction of electrically operated switch transducers.

H. Confirm interaction of interlock and lockout systems.

I. Verify main control supply-air pressure and observe compressor and dryer operations.

J. Record voltages of power supply and controller output. Determine if the system operates on a grounded or nongrounded power supply.

K. Note operation of electric actuators using spring return for proper fail-safe operations.

3.11 TOLERANCES

A. Set HVAC system airflow and water flow rates within the following tolerances:

1. Supply, Return, and Exhaust Fans: Plus 5 to plus 10 percent.
2. Air Outlets and Inlets: 0 to minus 10 percent.
3. Heating-Water Flow Rate: 0 to minus 10 percent.
4. Cooling-Water Flow Rate: 0 to minus 5 percent.

3.12 REPORTING

A. Initial Construction-Phase Report: Based on examination of the Contract Documents as specified in "Examination" Article above, prepare a report on the adequacy of design for systems' balancing devices. Recommend changes and additions to systems' balancing devices to facilitate proper performance measuring and balancing. Recommend changes and additions to HVAC systems and general construction to allow access for performance measuring and balancing devices.

B. Status Reports: As Work progresses, prepare reports to describe completed procedures, procedures in progress, and scheduled procedures. Include a list of deficiencies and problems found in systems being tested and balanced. Prepare a separate report for each system and each building floor for systems serving multiple floors.

3.13 FINAL REPORT

A. General: Typewritten, or computer printout in letter-quality font, on standard bond paper, in 3-ring binder, tabulated and divided into sections by tested and balanced systems.

B. Include a certification sheet in front of binder signed and sealed by the certified testing and balancing engineer.

   1. Include a list of the instruments used for procedures, along with proof of calibration.

C. Final Report Contents: In addition to the certified field report data, include the following:

   1. Pump curves.
   2. Fan curves.
   3. Manufacturers' test data.
   4. Field test reports prepared by system and equipment installers.
   5. Other information relative to equipment performance, but do not include approved Shop Drawings and Product Data.

D. General Report Data: In addition to the form titles and entries, include the following data in the final report, as applicable:

   1. Title page.
   2. Name and address of testing, adjusting, and balancing Agent.
   3. Project name.
   4. Project location.
   5. Architect's name and address.
   6. Engineer's name and address.
   7. Contractor's name and address.
   8. Report date.
   9. Signature of testing, adjusting, and balancing Agent who certifies the report.
   10. Summary of contents, including the following:

      a. Design versus final performance.
      b. Notable characteristics of systems.
      c. Description of system operation sequence if it varies from the Contract Documents.

   11. Nomenclature sheets for each item of equipment.
   12. Data for terminal units, including manufacturer, type size, and fittings.
   13. Notes to explain why certain final data in the body of reports vary from design values.
   14. Test conditions for fans and pump performance forms, including the following:

      a. Settings for outside-, return-, and exhaust-air dampers.
      b. Conditions of filters.
      c. Cooling coil, wet- and dry-bulb conditions.
      d. Face and bypass damper settings at coils.
      e. Fan drive settings, including settings and percentage of maximum pitch diameter.

f. Inlet vane settings for variable-air-volume systems.
g. Settings for supply-air, static-pressure controller.
h. Other system operating conditions that affect performance.

E. System Diagrams: Include schematic layouts of air and hydronic distribution systems. Present with single-line diagrams and include the following:

1. Quantities of outside, supply, return, and exhaust airflows.
2. Water and steam flow rates.
3. Duct, outlet, and inlet sizes.
4. Pipe and valve sizes and locations.
5. Terminal units.
6. Balancing stations.

F. Air-Handling Unit Test Reports: For air-handling units with coils, include the following:

1. Unit Data: Include the following:

a. Unit identification.
b. Location.
c. Make and type.
d. Model number and unit size.
e. Manufacturer's serial number.
f. Unit arrangement and class.
g. Discharge arrangement.
h. Sheave make, size in inches (mm), and bore.
i. Sheave dimensions, center-to-center and amount of adjustments in inches (mm).
j. Number of belts, make, and size.
k. Number of filters, type, and size.

2. Motor Data: Include the following:

a. Make and frame type and size.
b. Horsepower and rpm.
c. Volts, phase, and hertz.
d. Full-load amperage and service factor.
e. Sheave make, size in inches (mm), and bore.
f. Sheave dimensions, center-to-center and amount of adjustments in inches (mm).

3. Test Data: Include design and actual values for the following:

a. Total airflow rate in cfm (L/s).
b. Total system static pressure in inches wg (Pa).
c. Fan rpm.
d. Discharge static pressure in inches wg (Pa).
e. Filter static-pressure differential in inches wg (Pa).
f. Preheat coil static-pressure differential in inches wg (Pa).
g. Cooling coil static-pressure differential in inches wg (Pa).
h. Heating coil static-pressure differential in inches wg (Pa).

i. Outside airflow in cfm (L/s).
j. Return airflow in cfm (L/s).
k. Outside-air damper position.
l. Return-air damper position.
m. Vortex damper position.

G. Electric-Coil Test Reports: For electric furnaces, duct coils, and electric coils installed in central-station air-handling units, include the following:

1. Unit Data: Include the following:

a. System identification.
b. Location.
c. Coil identification.
d. Capacity in Btuh (kW).
e. Number of stages.
f. Connected volts, phase, and hertz.
g. Rated amperage.
h. Airflow rate in cfm (L/s).
i. Face area in sq. ft. (sq. m).
j. Minimum face velocity in fpm (m/s).

2. Test Data: Include design and actual values for the following:

a. Heat output in Btuh (kW).
b. Airflow rate in cfm (L/s).
c. Air velocity in fpm (m/s).
d. Entering-air temperature in deg F (deg C).
e. Leaving-air temperature in deg F (deg C).
f. Voltage at each connection.
g. Amperage for each phase.

H. Fan Test Reports: For supply, return, and exhaust fans, include the following:

1. Fan Data: Include the following:

a. System identification.
b. Location.
c. Make and type.
d. Model number and size.
e. Manufacturer's serial number.
f. Arrangement and class.
g. Sheave make, size in inches (mm), and bore.
h. Sheave dimensions, center-to-center and amount of adjustments in inches (mm).

2. Motor Data: Include the following:

a. Make and frame type and size.
b. Horsepower and rpm.

c. Volts, phase, and hertz.
d. Full-load amperage and service factor.
e. Sheave make, size in inches (mm), and bore.
f. Sheave dimensions, center-to-center and amount of adjustments in inches (mm).
g. Number of belts, make, and size.

3. Test Data: Include design and actual values for the following:

a. Total airflow rate in cfm (L/s).
b. Total system static pressure in inches wg (Pa).
c. Fan rpm.
d. Discharge static pressure in inches wg (Pa).
e. Suction static pressure in inches wg (Pa).

I. Round, Flat-Oval, and Rectangular Duct Traverse Reports: Include a diagram with a grid representing the duct cross-section and record the following:

1. Report Data: Include the following:

a. System and air-handling unit number.
b. Location and zone.
c. Traverse air temperature in deg F (deg C).
d. Duct static pressure in inches wg (Pa).
e. Duct size in inches (mm).
f. Duct area in sq. ft. ((sq. m)).
g. Design airflow rate in cfm (L/s).
h. Design velocity in fpm (m/s).
i. Actual airflow rate in cfm (L/s).
j. Actual average velocity in fpm (m/s).
k. Barometric pressure in psig (Pa).

J. Air-Terminal-Device Reports: For terminal units, include the following:

1. Unit Data: Include the following:

a. System and air-handling unit identification.
b. Location and zone.
c. Test apparatus used.
d. Area served.
e. Air-terminal-device make.
f. Air-terminal-device number from system diagram.
g. Air-terminal-device type and model number.
h. Air-terminal-device size.
i. Air-terminal-device effective area in sq. ft. ((sq. m)).

2. Test Data: Include design and actual values for the following:

a. Airflow rate in cfm (L/s).
b. Air velocity in fpm (m/s).

c. Preliminary airflow rate as needed in cfm (L/s).
d. Preliminary velocity as needed in fpm (m/s).
e. Final airflow rate in cfm (L/s).
f. Final velocity in fpm (m/s).
g. Space temperature in deg F (deg C).

K. Compressor and Condenser Reports: For refrigerant side of unitary systems, stand-alone refrigerant compressors, air-cooled condensing units, or water-cooled condensing units, include the following:

1. Unit Data: Include the following:

a. Unit identification.
b. Location.
c. Unit make and model number.
d. Manufacturer's compressor serial numbers.
e. Compressor make.
f. Compressor model and serial numbers.
g. Refrigerant weight in lb.
h. Low ambient temperature cutoff in deg F.

2. Test Data: Include design and actual values for the following:

a. Inlet-duct static pressure in inches wg.
b. Outlet-duct static pressure in inches wg.
c. Entering-air, dry-bulb temperature in deg F.
d. Leaving-air, dry-bulb temperature in deg F.
e. Condenser entering-water temperature in deg F.
f. Condenser leaving-water temperature in deg F.
g. Condenser water temperature differential in deg F.
h. Condenser entering-water pressure in feet of head or psig.
i. Condenser leaving-water pressure in feet of head or psig.
j. Condenser water pressure differential in feet of head or psig.
k. Control settings.
l. Unloader set points.
m. Low-pressure-cutout set point in psig.
n. High-pressure-cutout set point in psig.
o. Suction pressure in psig.
p. Suction temperature in deg F.
q. Condenser refrigerant pressure in psig.
r. Condenser refrigerant temperature in deg F.
s. Oil pressure in psig.
t. Oil temperature in deg F.
u. Voltage at each connection.
v. Amperage for each phase.
w. The kW input.
x. Crankcase heater kW.
y. Number of fans.
z. Condenser fan rpm.

aa. Condenser fan airflow rate in cfm.
bb. Condenser fan motor make, frame size, rpm, and horsepower.
cc. Condenser fan motor voltage at each connection.
dd. Condenser fan motor amperage for each phase.

L. Instrument Calibration Reports: For instrument calibration, include the following:

1. Report Data: Include the following:

a. Instrument type and make.
b. Serial number.
c. Application.
d. Dates of use.
e. Dates of calibration.

3.14 ADDITIONAL TESTS

A. Seasonal Periods: If initial testing, adjusting, and balancing procedures were not performed during near-peak summer and winter conditions, perform additional inspections, testing, and adjusting during near-peak summer and winter conditions.

END OF SECTION 23 0593

SECTION 23 0713 - DUCT INSULATION

PART 1 - GENERAL

1.1 RELATED DOCUMENTS

A. Drawings and general provisions of the Contract, including General and Supplementary Conditions and Division 1 Specification Sections, apply to this Section.

1.2 SUMMARY

A. This Section includes semirigid and flexible duct, plenum, and breeching insulation; insulating cements; field-applied jackets; accessories and attachments; and sealing compounds.

1.3 SUBMITTALS

A. Product Data: Identify thermal conductivity, thickness, and jackets (both factory and field applied, if any), for each type of product indicated.

1.4 QUALITY ASSURANCE

A. Installer Qualifications: Skilled mechanics who have successfully completed an apprenticeship program or another craft training program certified by the U.S. Department of Labor, Bureau of Apprenticeship and Training.

B. Fire-Test-Response Characteristics: As determined by testing materials identical to those specified in this Section according to ASTM E 84, by a testing and inspecting agency acceptable to authorities having jurisdiction. Factory label insulation and jacket materials and sealer and cement material containers with appropriate markings of applicable testing and inspecting agency.

1. Insulation Installed Indoors: Flame-spread rating of 25 or less, and smoke-developed rating of 50 or less.
2. Insulation Installed Outdoors: Flame-spread rating of 75 or less, and smoke-developed rating of 150 or less.

1.5 DELIVERY, STORAGE, AND HANDLING

A. Packaging: Ship insulation materials in containers marked by manufacturer with appropriate ASTM specification designation, type and grade, and maximum use temperature.

1.6 COORDINATION

A. Coordinate clearance requirements with duct Installer for insulation application.

1.7 SCHEDULING

A. Schedule insulation application after testing duct systems. Insulation application may begin on segments of ducts that have satisfactory test results.

PART 2 - PRODUCTS

2.1 INSULATION MATERIALS

A. Mineral-Fiber Board Thermal Insulation: Glass fibers bonded with a thermosetting resin. Comply with ASTM C 612, Type IB, without facing and with all-service jacket manufactured from kraft paper, reinforcing scrim, aluminum foil, and vinyl film.

B. Mineral-Fiber Blanket Thermal Insulation: Glass fibers bonded with a thermosetting resin. Comply with ASTM C 553, Type II, without facing and with all-service jacket manufactured from kraft paper, reinforcing scrim, aluminum foil, and vinyl film.

2.2 FIELD-APPLIED JACKETS

A. General: ASTM C 921, Type 1, unless otherwise indicated.

B. Foil and Paper Jacket: Laminated, glass-fiber-reinforced, flame-retardant kraft paper and aluminum foil.

C. PVC Jacket: High-impact, ultraviolet-resistant PVC; 20 mils thick; roll stock ready for shop or field cutting and forming.

1. Adhesive: As recommended by insulation material manufacturer.
2. PVC Jacket Color: White or gray.

D. Aluminum Jacket: Deep corrugated sheets manufactured from aluminum alloy complying with ASTM B 209, and having an integrally bonded moisture barrier over entire surface in contact with insulation. Metal thickness and corrugation dimensions are scheduled at the end of this Section.

1. Finish: Smooth finish.
2. Moisture Barrier: 1-mil thick, heat-bonded polyethylene and kraft paper.

E. Stainless-Steel Jacket: Deep corrugated sheets of stainless steel complying with ASTM A 666, Type 304 or 316; 0.10 inch thick; and roll stock ready for shop or field cutting and forming to indicated sizes.

1. Moisture Barrier: 3-mil thick, heat-bonded polyethylene and kraft paper.
2. Jacket Bands: Stainless steel, Type 304, 3/4 inch wide.

2.3 ACCESSORIES AND ATTACHMENTS

A. Glass Cloth and Tape: Comply with MIL-C-20079H, Type I for cloth and Type II for tape. Woven glass-fiber fabrics, plain weave, presized a minimum of 8 oz./sq. yd.

1. Tape Width: 4 inches.

B. Bands: 3/4 inch wide, in one of the following materials compatible with jacket:

1. Stainless Steel: ASTM A 666, Type 304; 0.020 inch thick.
2. Galvanized Steel: 0.005 inch thick.
3. Aluminum: 0.007 inch thick.

C. Wire: 0.080-inch, nickel-copper alloy; 0.062-inch, soft-annealed, stainless steel; or 0.062-inch, soft-annealed, galvanized steel.

D. Weld-Attached Anchor Pins and Washers: Copper-coated steel pin for capacitor-discharge welding and galvanized speed washer. Pin length sufficient for insulation thickness indicated.

1. Welded Pin Holding Capacity: 100 lb for direct pull perpendicular to the attached surface.

E. Adhesive-Attached Anchor Pins and Speed Washers: Galvanized steel plate, pin, and washer manufactured for attachment to duct and plenum with adhesive. Pin length sufficient for insulation thickness indicated.

1. Adhesive: Recommended by the anchor pin manufacturer as appropriate for surface temperatures of ducts, plenums, and breechings; and to achieve a holding capacity of 100 lb for direct pull perpendicular to the adhered surface.

F. Self-Adhesive Anchor Pins and Speed Washers: Galvanized steel plate, pin, and washer manufactured for attachment to duct and plenum with adhesive. Pin length sufficient for insulation thickness indicated.

2.4 VAPOR RETARDERS

A. Mastics: Materials recommended by insulation material manufacturer that are compatible with insulation materials, jackets, and substrates.

PART 3 - EXECUTION

3.1 EXAMINATION

A. Examine substrates and conditions for compliance with requirements for installation and other conditions affecting performance of insulation application.

B. Proceed with installation only after unsatisfactory conditions have been corrected.

3.2 PREPARATION

A. Surface Preparation: Clean and dry surfaces to receive insulation. Remove materials that will adversely affect insulation application.

3.3 GENERAL APPLICATION REQUIREMENTS

A. Apply insulation materials, accessories, and finishes according to the manufacturer's written instructions; with smooth, straight, and even surfaces; and free of voids throughout the length of ducts and fittings.

B. Use accessories compatible with insulation materials and suitable for the service. Use accessories that do not corrode, soften, or otherwise attack insulation or jacket in either wet or dry state.

C. Apply multiple layers of insulation with longitudinal and end seams staggered.

D. Seal joints and seams with vapor-retarder mastic on insulation indicated to receive a vapor retarder.

E. Keep insulation materials dry during application and finishing.

F. Apply insulation with tight longitudinal seams and end joints. Bond seams and joints with adhesive recommended by the insulation material manufacturer.

G. Apply insulation with the least number of joints practical.

H. Apply insulation over fittings and specialties, with continuous thermal and vapor-retarder integrity, unless otherwise indicated.

I. Hangers and Anchors: Where vapor retarder is indicated, seal penetrations in insulation at hangers, supports, anchors, and other projections with vapor-retarder mastic. Apply insulation continuously through hangers and around anchor attachments.

J. Insulation Terminations: For insulation application where vapor retarders are indicated, seal ends with a compound recommended by the insulation material manufacturer to maintain vapor retarder.

K. Apply insulation with integral jackets as follows:

1. Pull jacket tight and smooth.
2. Joints and Seams: Cover with tape and vapor retarder as recommended by insulation material manufacturer to maintain vapor seal.
3. Vapor-Retarder Mastics: Where vapor retarders are indicated, apply mastic on seams and joints and at ends adjacent to duct flanges and fittings.

L. Cut insulation according to manufacturer's written instructions to prevent compressing insulation to less than 75 percent of its nominal thickness.

M. Install vapor-retarder mastic on ducts and plenums scheduled to receive vapor retarders.

1. Ducts with Vapor Retarders: Overlap insulation facing at seams and seal with vapor-retarder mastic and pressure-sensitive tape having same facing as insulation. Repair punctures, tears, and penetrations with tape or mastic to maintain vapor-retarder seal.
2. Ducts without Vapor Retarders: Overlap insulation facing at seams and secure with outward clinching staples and pressure-sensitive tape having same facing as insulation.

N. Roof Penetrations: Apply insulation for interior applications to a point even with top of roof flashing.

1. Seal penetrations with vapor-retarder mastic.
2. Apply insulation for exterior applications tightly joined to interior insulation ends.
3. Seal insulation to roof flashing with vapor-retarder mastic.

O. Interior Wall and Partition Penetrations: Apply insulation continuously through walls and partitions, except fire-rated walls and partitions.

P. Fire-Rated Wall and Partition Penetrations: Terminate insulation at fire/smoke damper sleeves for fire-rated wall and partition penetrations.

Q. Floor Penetrations: Terminate insulation at underside of floor assembly and at floor support at top of floor.
1. For insulation indicated to have vapor retarders, taper termination and seal insulation ends with vapor-retarder mastic.

3.4 FIELD-APPLIED JACKET APPLICATION

A. Apply glass-cloth jacket, where indicated, directly over bare insulation or insulation with factory-applied jackets.

1. Apply jacket smooth and tight to surface with 2-inch overlap at seams and joints.
2. Embed glass cloth between two 0.062-inch thick coats of jacket manufacturer's recommended adhesive.
3. Completely encapsulate insulation with jacket, leaving no exposed raw insulation.

3.5 INDOOR DUCT AND PLENUM APPLICATION SCHEDULE

A. Service: Round and rectangular ducts.

1. Material: Mineral-fiber blanket.
2. Thickness: 1-1/2 inches.
3. Number of Layers: One.

3.6 OUTDOOR DUCT AND PLENUM APPLICATION SCHEDULE

A. Service: Round and rectangular ducts.

1. Material: Mineral-fiber board.
2. Thickness: 1-1/2 inches.
3. Number of Layers: One.
4. Field-Applied Jacket: Aluminum.

    a. Aluminum Thickness: 0.040 inch.

END OF SECTION 23 0713

SECTION 23 1123 – FACILTY NATURAL GAS PIPING

PART 1 - GENERAL

1.1 RELATED DOCUMENTS

A. Drawings and general provisions of the Contract, including General and Supplementary Conditions and Division 1 Specification Sections, apply to this Section.

1.2 SUMMARY

A. This Section includes fuel gas piping, specialties, and accessories within the building.

1.3 SUBMITTALS

A. Product Data: For the following:
   1. Pressure regulators. Include pressure rating, capacity, and settings of selected models.

1.4 QUALITY ASSURANCE

A. ANSI Standard: Comply with ANSI Z223.1, "National Fuel Gas Code."

B. FM Standard: Provide components listed in FM's "Fire Protection Approval Guide" if specified to be FM approved.

C. IAS Standard: Provide components listed in IAS's "Directory of A. G. A. and C. G. A Certified Appliances and Accessories" if specified to be IAS listed.

D. UL Standard: Provide components listed in UL's "Gas and Oil Equipment Directory" if specified to be UL listed.

1.5 COORDINATION

A. Existing Utilities: Do not interrupt utilities serving facilities occupied by Owner or others unless permitted under the following conditions and then only after arranging to provide temporary utility services according to requirements indicated:

   1. Notify Architect not less than two days in advance of proposed utility interruptions.
   2. Do not proceed with utility interruptions without Architect's written permission.

PART 2 - PRODUCTS

2.1 PIPES, TUBES, FITTINGS, AND JOINING MATERIALS

A. Steel Pipe: ASTM A 53; Type E or S; Grade B; Schedule 40; black.

1. Malleable-Iron Threaded Fittings: ASME B16.3, Class 150, standard pattern, with threaded ends according to ASME B1.20.1.
2. Unions: ASME B16.39, Class 150, malleable iron with brass-to-iron seat, ground joint, and threaded ends according to ASME B1.20.1.
3. Cast-Iron Flanges and Flanged Fittings: ASME B16.1, Class 125.
4. Steel Welding Fittings: ASME B16.9, wrought steel or ASME B16.11, forged steel.
5. Steel Threaded Fittings: ASME B16.11, forged steel with threaded ends according to ASME B1.20.1.
6. Joint Compound and Tape: Suitable for natural gas.
7. Steel Flanges and Flanged Fittings: ASME B16.5.
8. Gasket Material: Thickness, material, and type suitable for natural gas.

2.2 PROTECTIVE COATING

A. Furnish pipe and fittings with factory-applied, corrosion-resistant polyethylene coating for use in corrosive atmosphere.

2.3 PIPING SPECIALTIES

A. Flexible Connectors: ANSI Z21.24, copper alloy.

B. Quick-Disconnect Devices: ANSI Z21.41, convenience outlets and matching plug connector.

2.4 SPECIALTY VALVES

A. Valves, NPS 2 and Smaller: Threaded ends according to ASME B1.20.1 for pipe threads.

B. Valves, NPS 2-1/2 and Larger: Flanged ends according to ASME B16.5 for steel flanges and according to ASME B16.24 for copper and copper-alloy flanges.

C. Appliance Connector Valves: ANSI Z21.15 and IAS listed.

D. Gas Stops: Bronze body with AGA stamp, plug type with bronze plug and flat or square head, ball type with chrome-plated brass ball and lever handle, or butterfly valve with stainless-steel disc and fluorocarbon elastomer seal and lever handle; 2-psig minimum pressure rating.

E. Gas Valves, NPS 2 and Smaller: ASME B16.33 and IAS-listed bronze body and 125-psig pressure rating.

1. Tamperproof Feature: Include design for locking.

F. Plug Valves, NPS 2-1/2 and Larger: ASME B16.38 and MSS SP-78 cast-iron, lubricated plug valves, with 125-psig pressure rating.

1. Tamperproof Feature: Include design for locking.

G. General-Duty Valves, NPS 2-1/2 and Larger: ASME B16.38, cast-iron body, suitable for fuel gas service, with "WOG" indicated on valve body, and 125-psig pressure rating.

1. Gate Valves: MSS SP-70, OS&Y type with solid wedge.
2. Butterfly Valves: MSS SP-67, lug type with lever handle.

H. Automatic Gas Valves: ANSI Z21.21, with electrical operator for actuation by appliance automatic shutoff device.

I. Electrically Operated Gas Valves: UL 429, bronze, aluminum, or cast-iron body solenoid valve; 120-V ac, 60 Hz, Class B, continuous-duty molded coil. Include NEMA ISC 6, Type 4, coil enclosure and electrically opened and closed dual coils. Valve position shall normally be closed.

2.5 PRESSURE REGULATORS

A. Description: Single stage and suitable for fuel gas service. Include steel jacket and corrosion-resistant components, elevation compensator, and atmospheric vent.

1. NPS 2 and Smaller: Threaded ends according to ASME B1.20.1 for pipe threads.
2. NPS 2-1/2 and Larger: Flanged ends according to ASME B16.5 for steel flanges and according to ASME B16.24 for copper and copper-alloy flanges.
3. Service Pressure Regulators: ANSI Z21.80. Include 100-psig minimum inlet pressure rating.

B. Pressure Regulator Vents: Factory- or field-installed, corrosion-resistant screen in opening if not connected to vent piping.

PART 3 - EXECUTION

3.1 PREPARATION

A. Close equipment shutoff valves before turning off fuel gas to premises or section of piping. Perform leakage test as specified in "Field Quality Control" Article to determine that all equipment is turned off in affected piping section.

B. Comply with ANSI Z223.1, "Prevention of Accidental Ignition" Paragraph.

3.2 SERVICE ENTRANCE PIPING

A. Extend fuel gas piping and connect to fuel gas distribution for service entrance to building.

1. Exterior fuel gas distribution system piping, service pressure regulator, and service meter will be provided by gas utility.

B. Install dielectric fitting downstream from and adjacent to each service meter unless meter is supported from service-meter bar with integral dielectric fitting. Install shutoff valve downstream from and adjacent to dielectric fitting. Refer to Division 15 Section "Basic Mechanical Materials and Methods" for dielectric fittings.

3.3 PIPING APPLICATIONS

A. Flanges, unions, transition, and special fittings with pressure ratings same as or higher than system pressure rating may be used in applications below, unless otherwise indicated.

B. Fuel Gas Piping: Use the following:

1. NPS 1/2 and Smaller: Steel pipe, malleable-iron threaded fittings, and threaded joints.
2. NPS 3/4 and NPS 1: Steel pipe, malleable-iron threaded fittings, and threaded joints.
3. NPS 1-1/4 to NPS 2: Steel pipe, malleable-iron threaded fittings, and threaded joints.
4. NPS 1-1/4 to NPS 2: Steel pipe, steel welding fittings, and welded joints.
5. NPS 2-1/2 to NPS 4: Steel pipe, malleable-iron threaded fittings, and threaded joints.
6. NPS 2-1/2 to NPS 4: Steel pipe, steel welding fittings, and welded joints.
7. Larger Than NPS 4: Steel pipe, steel welding fittings, and welded joints.

C. Underground Fuel Gas Piping: Steel pipe, steel welding fittings, and welded joints. Encase in containment conduit.

D. Containment Conduits: Steel pipe, steel welding fittings, and welded joints.

E. Gas Service Piping at Meters and Regulators, Above 5 psig: Steel pipe, steel welding fittings, and welded joints.

3.4 VALVE APPLICATIONS

A. Appliance Shutoff Valves for Pressure 0.5 psig or Less: Appliance connector valve or gas stop.

B. Appliance Shutoff Valves for Pressure 0.5 to 2 psig: Gas stop or gas valve.

C. Appliance Shutoff Valves for Pressure 2 to 5 psig: Gas valve.

D. Piping Line Valves, NPS 2 and Smaller: Gas valve.

E. Piping Line Valves, NPS 2-1/2 and Larger: Plug valve or general-duty valve.

F. Valves at Service Meter, NPS 2 and Smaller: Gas valve.

G. Valves at Service Meter, NPS 2-1/2 and Larger: Plug valve.

3.5 PIPING INSTALLATION

A. Concealed Locations: Except as specified below, install concealed gas piping in airtight conduit constructed of Schedule 40, seamless, black steel pipe with welded joints. Vent conduit to outside and terminate with screened vent cap.

1. Above-Ceiling Locations: Gas piping may be installed in accessible spaces, subject to approval of authorities having jurisdiction, whether or not such spaces are used as plenums. Do not locate valves above ceilings.
2. In Floors: Gas piping with welded joints and protective wrapping specified in "Protective Coating" Article in Part 2 may be installed in floors, subject to approval of authorities having jurisdiction. Surround piping cast in concrete slabs with minimum of 1-1/2 inches of concrete. Piping may not be in physical contact with other metallic structures such as reinforcing rods or electrically neutral conductors. Do not embed piping in concrete slabs containing quick-set additives or cinder aggregate.
3. In Floor Channels: Gas piping may be installed in floor channels, subject to approval of authorities having jurisdiction. Channels must have cover and be open to space above cover for ventilation.
4. In Partitions: Do not install concealed piping in solid partitions. Protect tubing from physical damage when installed inside partitions or hollow walls.

   a. Exception: Tubing passing through partitions or walls.

5. In Walls: Gas piping with welded joints and protective wrapping specified in "Protective Coating" Article in Part 2 may be installed in masonry walls, subject to approval of authorities having jurisdiction.
6. Prohibited Locations: Do not install gas piping in or through circulating air ducts, clothes or trash chutes, chimneys or gas vents (flues), ventilating ducts, or dumbwaiter or elevator shafts.

   a. Exception: Accessible above-ceiling space specified above.

B. Drips and Sediment Traps: Install drips at points where condensate may collect. Include outlets of service meters. Locate where readily accessible for cleaning and emptying. Do not install where condensate would be subject to freezing.

1. Construct drips and sediment traps using tee fitting with bottom outlet plugged or capped. Use minimum-length nipple of 3 pipe diameters, but not less than 3 inches long, and same size as connected pipe. Install with space between bottom of drip and floor for removal of plug or cap.

C. Conceal pipe installations in walls, pipe spaces, utility spaces, above ceilings, below grade or floors, and in floor channels, unless indicated to be exposed to view.

D. Install fuel gas piping at uniform grade of 0.1 percent slope upward toward risers.

E. Use eccentric reducer fittings to make reductions in pipe sizes. Install fittings with level side down.

F. Connect branch piping from top or side of horizontal piping.

G. Install unions in pipes NPS 2 and smaller, adjacent to each valve, at final connection to each piece of equipment, and elsewhere as indicated. Unions are not required on flanged devices.

H. Install corrugated, stainless-steel tubing system according to manufacturer's written instructions. Include striker plates to protect tubing from puncture where tubing is restrained and cannot move.

I. Install strainer on inlet of each line pressure regulator and automatic and electrically operated valve.

J. Install pressure gage upstream and downstream from each line pressure regulator.

K. Install flanges on valves, specialties, and equipment having NPS 2-1/2 and larger connections.

L. Install vent piping for gas pressure regulators and gas trains, extend outside building, and vent to atmosphere. Terminate vents with turned-down, reducing-elbow fittings with corrosion-resistant insect screens in large end.

M. Install containment conduits for gas piping below slabs, within building, in gastight conduits extending minimum of 4 inches outside building, and vented to atmosphere. Terminate vents with turned-down, reducing-elbow fittings with corrosion-resistant insect screens in large end. Prepare and paint outside of conduits with coal-tar, epoxy-polyamide paint according to SSPC-Paint 16.

3.6 HANGER AND SUPPORT INSTALLATION

A. Install hangers for horizontal steel piping with the following maximum spacing and minimum rod sizes:

1. NPS 1 and Smaller: Maximum span, 96 inches; minimum rod size, 3/8 inch.
2. NPS 1-1/4: Maximum span, 108 inches; minimum rod size, 3/8 inch.
3. NPS 1-1/2 and NPS 2: Maximum span, 108 inches; minimum rod size, 3/8 inch.
4. NPS 2-1/2 to NPS 3-1/2: Maximum span, 10 feet; minimum rod size, 1/2 inch.
5. NPS 4 and Larger: Maximum span, 10 feet; minimum rod size, 5/8 inch.

3.7 CONNECTIONS

A. Drawings indicate general arrangement of fuel gas piping, fittings, and specialties.

B. Install piping adjacent to appliances to allow service and maintenance.

C. Connect piping to appliances using gas with shutoff valves and unions. Install valve upstream from and within 72 inches of each appliance. Install union downstream from valve.

D. Sediment Traps: Install tee fitting with capped nipple in bottom to form drip, as close as practical to inlet of each appliance using gas.

E. Ground equipment.

1. Tighten electrical connectors and terminals according to manufacturer's published torque-tightening values. If manufacturer's torque values are not indicated, use those specified in UL 486A and UL 486B.
2. Do not use gas pipe as grounding electrode.

3.8 LABELING AND IDENTIFYING

A. Equipment Nameplates and Signs: Install engraved plastic-laminate equipment nameplate or sign on or near each service meter, pressure regulator, and specialty valve.

1. Text: In addition to name of identified unit, distinguish between multiple units, inform operator of operational requirements, indicate safety and emergency precautions, and warn of hazards and improper operations.

3.9 PAINTING

A. Paint exterior service meters, pressure regulators, and specialty valves.

1. Color: Gray.

3.10 FIELD QUALITY CONTROL

A. Inspect, test, and purge piping according to ANSI Z223.1, Part 4 "Inspection, Testing, and Purging," and requirements of authorities having jurisdiction.

B. Repair leaks and defects with new materials and retest system until satisfactory results are obtained.

C. Report test results promptly and in writing to Architect and authorities having jurisdiction.

D. Verify capacities and pressure ratings of service meters, pressure regulators, valves, and specialties.

E. Verify correct pressure settings for pressure regulators.

F. Verify that specified piping tests are complete.

3.11 ADJUSTING

A. Adjust controls and safety devices. Replace damaged and malfunctioning controls and safety devices.

END OF SECTION 23 1123

SECTION 23 3113 - METAL DUCTS

PART 1 - GENERAL

1.1 RELATED DOCUMENTS

A. Drawings and general provisions of the Contract, including General and Supplementary Conditions and Division 1 Specification Sections, apply to this Section.

1.2 SUMMARY

A. This Section includes rectangular, round, and flat-oval metal ducts and plenums for heating, ventilating, and air-conditioning systems in pressure classes from minus 2- to plus 10-inch wg.

1.3 DEFINITIONS

A. Thermal Conductivity and Apparent Thermal Conductivity (k-Value): As defined in ASTM C 168. In this Section, these values are the result of the formula Btu x in./h x sq. ft. x deg F or W/m x K at the temperature differences specified. Values are expressed as Btu or W.

1. Example: Apparent Thermal Conductivity (k-Value): 0.26 or 0.037.

1.4 SYSTEM DESCRIPTION

A. Duct system design, as indicated, has been used to select and size air-moving and -distribution equipment and other components of air system. Changes to layout or configuration of duct system must be specifically approved in writing by Architect. Accompany requests for layout modifications with calculations showing that proposed layout will provide original design results without increasing system total pressure.

1.5 SUBMITTALS

A. Product Data: For duct liner and sealing materials.

B. Record Drawings: Indicate actual routing, fitting details, reinforcement, support, and installed accessories and devices.

1.6 QUALITY ASSURANCE

A. Welding Standards: Qualify welding procedures and welding personnel to perform welding processes for this Project according to AWS D1.1, "Structural Welding Code--Steel," for hangers and supports; AWS D1.2, "Structural Welding Code--Aluminum," for aluminum

supporting members; and AWS D9.1, "Sheet Metal Welding Code," for duct joint and seam welding.

B. Comply with NFPA 90A, "Installation of Air Conditioning and Ventilating Systems," unless otherwise indicated.

C. Comply with NFPA 90B, "Installation of Warm Air Heating and Air Conditioning Systems," unless otherwise indicated.

D. Comply with NFPA 96, "Ventilation Control and Fire Protection of Commercial Cooking Operations," Chapter 3, "Duct System," for range hood ducts, unless otherwise indicated.

1.7 DELIVERY, STORAGE, AND HANDLING

A. Deliver sealant and firestopping materials to site in original unopened containers or bundles with labels indicating manufacturer, product name and designation, color, expiration period for use, pot life, curing time, and mixing instructions for multicomponent materials.

B. Store and handle sealant and firestopping materials according to manufacturer's written recommendations.

PART 2 - PRODUCTS

2.1 SHEET METAL MATERIALS

A. Galvanized, Sheet Steel: Lock-forming quality; ASTM A 653/A 653M, G90 coating designation; mill-phosphatized finish for surfaces of ducts exposed to view.

B. PVC-Coated Galvanized Steel: UL 181, Class 1 listing. Lock-forming-quality, galvanized, sheet steel with ASTM A 653/A 653M, G90 coating designation; factory-applied, 4-mil PVC coating on exposed surfaces of ducts and fittings (exterior of ducts and fittings for underground applications and interior of ducts and fittings for fume-handling applications) and with factory-applied, 2-mil PVC coating on reverse side of ducts and fittings.

C. Carbon-Steel Sheets: ASTM A 366/A 366M, cold-rolled sheets; commercial quality; with oiled, exposed matte finish.

D. Reinforcement Shapes and Plates: Galvanized steel reinforcement where installed on galvanized, sheet metal ducts; compatible materials for aluminum and stainless-steel ducts.

E. Tie Rods: Galvanized steel, 1/4-inch minimum diameter for 36-inch length or less; 3/8-inch minimum diameter for lengths longer than 36 inches.

2.2 DUCT LINER

A. General: Comply with NFPA 90A or NFPA 90B and NAIMA's "Fibrous Glass Duct Liner Standard."

B. Materials: ASTM C 1071 with coated surface exposed to airstream to prevent erosion of glass fibers.

1. Thickness: 1 inch.
2. Thermal Conductivity (k-Value): 0.26 at 75 deg F mean temperature.
3. Fire-Hazard Classification: Maximum flame-spread rating of 25 and smoke-developed rating of 50, when tested according to ASTM C 411.
4. Liner Adhesive: Comply with NFPA 90A or NFPA 90B and ASTM C 916.
5. Mechanical Fasteners: Galvanized steel, suitable for adhesive attachment, mechanical attachment, or welding attachment to duct without damaging liner when applied as recommended by manufacturer and without causing leakage in duct.

    a. Tensile Strength: Indefinitely sustain a 50-lb tensile, dead-load test perpendicular to duct wall.
    b. Fastener Pin Length: As required for thickness of insulation and without projecting more than 1/8 inch into airstream.
    c. Adhesive for Attaching Mechanical Fasteners: Comply with fire-hazard classification of duct liner system.

2.3 SEALANT MATERIALS

A. Joint and Seam Sealants, General: The term "sealant" is not limited to materials of adhesive or mastic nature but includes tapes and combinations of open-weave fabric strips and mastics.

1. Joint and Seam Tape: 2 inches wide; glass-fiber fabric reinforced.
2. Tape Sealing System: Woven-fiber tape impregnated with a gypsum mineral compound and a modified acrylic/silicone activator to react exothermically with tape to form a hard, durable, airtight seal.
3. Joint and Seam Sealant: One-part, nonsag, solvent-release-curing, polymerized butyl sealant, formulated with a minimum of 75 percent solids.
4. Flanged Joint Mastics: One-part, acid-curing, silicone, elastomeric joint sealants, complying with ASTM C 920, Type S, Grade NS, Class 25, Use O.

2.4 HANGERS AND SUPPORTS

A. Building Attachments: Concrete inserts, powder-actuated fasteners, or structural-steel fasteners appropriate for building materials.

1. Use powder-actuated concrete fasteners for standard-weight aggregate concretes or for slabs more than 4 inches thick.

2. Exception: Do not use powder-actuated concrete fasteners for lightweight-aggregate concretes or for slabs less than 4 inches thick.

B. Hanger Materials: Galvanized, sheet steel or round, threaded steel rod.

1. Hangers Installed in Corrosive Atmospheres: Electrogalvanized, all-thread rod or galvanized rods with threads painted after installation.
2. Straps and Rod Sizes: Comply with SMACNA's "HVAC Duct Construction Standards--Metal and Flexible" for sheet steel width and thickness and for steel rod diameters.

C. Duct Attachments: Sheet metal screws, blind rivets, or self-tapping metal screws; compatible with duct materials.

D. Trapeze and Riser Supports: Steel shapes complying with ASTM A 36/A 36M.

1. Supports for Galvanized-Steel Ducts: Galvanized steel shapes and plates.
2. Supports for Stainless-Steel Ducts: Stainless-steel support materials.
3. Supports for Aluminum Ducts: Aluminum support materials, unless materials are electrolytically separated from ductwork.

2.5 RECTANGULAR DUCT FABRICATION

A. General: Fabricate ducts, elbows, transitions, offsets, branch connections, and other construction with galvanized, sheet steel, according to SMACNA's "HVAC Duct Construction Standards--Metal and Flexible." Comply with requirements for metal thickness, reinforcing types and intervals, tie-rod applications, and joint types and intervals.

1. Lengths: Fabricate rectangular ducts in lengths appropriate to reinforcement and rigidity class required for pressure classification.
2. Materials: Free from visual imperfections such as pitting, seam marks, roller marks, stains, and discolorations.

B. Fabricate range hood exhaust ducts with 0.0598-inch thick, carbon-steel sheet for concealed ducts and 0.0500-inch thick stainless steel for exposed ducts. Weld and flange seams and joints. Comply with NFPA 96.

C. Fabricate dishwasher hood exhaust ducts with 0.0500-inch thick stainless steel. Weld and flange seams and joints.

D. Acid-Resistant Ducts: PVC-coated galvanized steel.

E. Static-Pressure Classifications: Unless otherwise indicated, construct ducts to the following:

1. Supply Ducts: 3-inch wg.
2. Return Ducts: 2-inch wg, negative pressure.
3. Exhaust Ducts: 2-inch wg, negative pressure.

F. Cross Breaking or Cross Beading: Cross break or cross bead duct sides 19 inches and larger and 0.0359 inch thick or less, with more than 10 sq. ft. of unbraced panel area, unless ducts are lined.

2.6 SHOP APPLICATION OF LINER IN RECTANGULAR DUCTS

A. Adhere a single layer of indicated thickness of duct liner with 90 percent coverage of adhesive at liner contact surface area. Multiple layers of insulation to achieve indicated thickness are prohibited.

B. Apply adhesive to liner facing in direction of airflow not receiving metal nosing.

C. Butt transverse joints without gaps and coat joint with adhesive.

D. Fold and compress liner in corners of rectangular ducts or cut and fit to ensure butted-edge overlapping.

E. Do not apply liners in rectangular ducts with longitudinal joints, except at corners of ducts, unless duct size and standard liner product dimensions make longitudinal joints necessary.

F. Apply adhesive coating on longitudinal seams in ducts with air velocity of 2500 fpm.

G. Secure liner with mechanical fasteners 4 inches from corners and at intervals not exceeding 12 inches transversely around perimeter; at 3 inches from transverse joints and at intervals not exceeding 18 inches longitudinally.

H. Secure transversely oriented liner edges facing the airstream with metal nosings that have either channel or "Z" profile or are integrally formed from duct wall. Fabricate edge facings at the following locations:

1. Fan discharge.
2. Intervals of lined duct preceding unlined duct.
3. Upstream edges of transverse joints in ducts.

I. Terminate liner with duct buildouts installed in ducts to attach dampers, turning vane assemblies, and other devices. Fabricated buildouts (metal hat sections) or other buildout means are optional; when used, secure buildouts to duct wall with bolts, screws, rivets, or welds. Terminate liner at fire dampers at connection to fire-damper sleeve.

2.7 ROUND AND FLAT-OVAL DUCT FABRICATION

A. General: Diameter as applied to flat-oval ducts in this Article is the diameter of the size of round duct that has a circumference equal to perimeter of a given size of flat-oval duct.

B. Round Ducts: Fabricate supply ducts of galvanized steel according to SMACNA's "HVAC Duct Construction Standards--Metal and Flexible."

C. Flat-Oval Ducts: Fabricate supply ducts with standard spiral lock seams or with butt-welded longitudinal seams according to SMACNA's "HVAC Duct Construction Standards--Metal and Flexible."

D. Double-Wall (Insulated) Ducts: Fabricate double-wall (insulated) ducts with an outer shell and an inner liner. Dimensions indicated on internally insulated ducts are inside dimensions.

1. Thermal Conductivity (k-Value): 0.26 at 75 deg F mean temperature.
2. Outer Shell: Base outer-shell metal thickness on actual outer-shell dimensions. Fabricate outer-shell lengths 2 inches longer than inner shell and insulation, and in metal thickness specified for single-wall duct.
3. Insulation: 1-inch thick fibrous-glass insulation, unless otherwise indicated. Terminate insulation where internally insulated duct connects to single-wall duct or uninsulated components. Terminate insulation and reduce outer duct diameter to inner liner diameter.
4. Solid Inner Liner: Fabricate round and flat-oval inner liners with solid sheet metal of thickness listed below:
5. Perforated Inner Liner: Fabricate round and flat-oval inner liners with sheet metal having 3/32-inch diameter perforations, with an overall open area of 23 percent. Use the following sheet metal thicknesses and seam construction:

   a. Ducts 3 to 8 Inches in Diameter: 0.019 inch with standard spiral seam construction.
   b. Ducts 9 to 42 Inches in Diameter: 0.019 inch with single-rib spiral seam construction.
   c. Ducts 44 to 60 Inches in Diameter: 0.022 inch with single-rib spiral seam construction.
   d. Ducts 62 to 88 Inches in Diameter: 0.034 inch with standard spiral seam construction.

6. Maintain concentricity of liner to outer shell by mechanical means. Retain insulation from dislocation by mechanical means.

2.8 ROUND AND FLAT-OVAL SUPPLY AND EXHAUST FITTING FABRICATION

A. 90-Degree Tees and Laterals and Conical Tees: Fabricate to comply with SMACNA's "HVAC Duct Construction Standards--Metal and Flexible," with metal thicknesses specified for longitudinal seam straight duct.

B. Diverging-Flow Fittings: Fabricate with a reduced entrance to branch taps with no excess material projecting from body onto branch tap entrance.

C. Elbows: Fabricate in die-formed, gored, pleated, or mitered construction. Fabricate bend radius of die-formed, gored, and pleated elbows one and one-half times elbow diameter. Unless elbow construction type is indicated, fabricate elbows as follows:

1. Mitered-Elbow Radius and Number of Pieces: Welded construction complying with SMACNA's "HVAC Duct Construction Standards--Metal and Flexible," unless otherwise indicated.

2. Round Mitered Elbows: Welded construction with the following metal thickness for pressure classes from minus 2- to plus 2-inch wg:

   a. Ducts 3 to 26 Inches in Diameter: 0.028 inch.
   b. Ducts 27 to 36 Inches in Diameter: 0.034 inch.
   c. Ducts 37 to 50 Inches in Diameter: 0.040 inch.
   d. Ducts 52 to 60 Inches in Diameter: 0.052 inch.
   e. Ducts 62 to 84 Inches in Diameter: 0.064 inch.

3. Round Mitered Elbows: Welded construction with the following metal thickness for pressure classes from 2- to 10-inch wg:

   a. Ducts 3 to 14 Inches in Diameter: 0.028 inch.
   b. Ducts 15 to 26 Inches in Diameter: 0.034 inch.
   c. Ducts 27 to 50 Inches in Diameter: 0.040 inch.
   d. Ducts 52 to 60 Inches in Diameter: 0.052 inch.
   e. Ducts 62 to 84 Inches in Diameter: 0.064 inch.

4. Flat-Oval Mitered Elbows: Welded construction with same metal thickness as longitudinal seam flat-oval duct.
5. 90-Degree, Two-Piece, Mitered Elbows: Use only for supply systems, or exhaust systems for material-handling classes A and B; and only where space restrictions do not permit using 1.5 bend radius elbows. Fabricate with single-thickness turning vanes.
6. Round Elbows, 8 Inches and Smaller: Fabricate die-formed elbows for 45- and 90-degree elbows and pleated elbows for 30, 45, 60, and 90 degrees only. Fabricate nonstandard bend-angle configuration or nonstandard diameter elbows with gored construction.
7. Round Elbows, 9 through 14 Inches: Fabricate gored or pleated elbows for 30, 45, 60, and 90 degrees, unless space restrictions require a mitered elbow. Fabricate nonstandard bend-angle configuration or nonstandard diameter elbows with gored construction.
8. Round Elbows, Larger Than 14 Inches, and All Flat-Oval Elbows: Fabricate gored elbows, unless space restrictions require a mitered elbow.
9. Die-Formed Elbows for Sizes through 8 Inches and All Pressures: 0.040 inch thick with two-piece welded construction.
10. Round Gored-Elbow Metal Thickness: Same as non-elbow fittings specified above.
11. Flat-Oval Elbow Metal Thickness: Same as longitudinal seam flat-oval duct specified above.
12. Pleated Elbows for Sizes through 14 Inches and Pressures through 10-Inch wg: 0.022 inch.

PART 3 - EXECUTION

3.1 DUCT INSTALLATION, GENERAL

A. Duct installation requirements are specified in other Division 15 Sections. Drawings indicate general arrangement of ducts, fittings, and accessories.

B. Construct and install each duct system for the specific duct pressure classification indicated.

C. Install round and flat-oval ducts in lengths not less than 12 feet, unless interrupted by fittings.

D. Install ducts with fewest possible joints.

E. Install fabricated fittings for changes in directions, changes in size and shape, and connections.

F. Install couplings tight to duct wall surface with a minimum of projections into duct.

G. Install ducts, unless otherwise indicated, vertically and horizontally, parallel and perpendicular to building lines; avoid diagonal runs.

H. Install ducts close to walls, overhead construction, columns, and other structural and permanent enclosure elements of building.

I. Install ducts with a clearance of 1 inch, plus allowance for insulation thickness.

J. Conceal ducts from view in finished spaces. Do not encase horizontal runs in solid partitions, unless specifically indicated.

K. Coordinate layout with suspended ceiling, fire- and smoke-control dampers, lighting layouts, and similar finished work.

L. Electrical Equipment Spaces: Route ductwork to avoid passing through transformer vaults and electrical equipment spaces and enclosures.

M. Non-Fire-Rated Partition Penetrations: Where ducts pass through interior partitions and exterior walls, and are exposed to view, conceal space between construction opening and duct or duct insulation with sheet metal flanges of same metal thickness as duct. Overlap opening on four sides by at least 1-1/2 inches.

N. Fire-Rated Partition Penetrations: Where ducts pass through interior partitions and exterior walls, install appropriately rated fire damper, sleeve, and firestopping sealant. Fire and smoke dampers are specified in Division 15 Section "Duct Accessories." Firestopping materials and installation methods are specified in Division 7 Section "Firestopping."

3.2 RANGE HOOD EXHAUST DUCT INSTALLATIONS

A. Install ducts to allow for thermal expansion of ductwork through 2000 deg F temperature range.

B. Install ducts without dips or traps that may collect residues, unless traps have continuous or automatic residue removal.

C. Install access openings at each change in direction and at 50-foot intervals; locate on sides of duct a minimum of 1-1/2 inches from bottom; and fit with grease-tight covers of same material as duct.

D. Do not penetrate fire-rated assemblies.

3.3 SEAM AND JOINT SEALING

A. General: Seal duct seams and joints according to the duct pressure class indicated and as described in SMACNA's "HVAC Duct Construction Standards--Metal and Flexible."

B. Pressure Classification Less Than 2-Inch wg: Transverse joints.

C. Seal externally insulated ducts before insulation installation.

3.4 HANGING AND SUPPORTING

A. Install rigid round, rectangular, and flat-oval metal duct with support systems indicated in SMACNA's "HVAC Duct Construction Standards--Metal and Flexible."

B. Support horizontal ducts within 24 inches of each elbow and within 48 inches of each branch intersection.

C. Support vertical ducts at a maximum interval of 16 feet and at each floor.

D. Install upper attachments to structures with an allowable load not exceeding one-fourth of failure (proof-test) load.

E. Install concrete inserts before placing concrete.

F. Install powder-actuated concrete fasteners after concrete is placed and completely cured.

3.5 CONNECTIONS

A. Connect equipment with flexible connectors according to Division 15 Section "Duct Accessories."

B. For branch, outlet and inlet, and terminal unit connections, comply with SMACNA's "HVAC Duct Construction Standards--Metal and Flexible."

3.6 FIELD QUALITY CONTROL

A. Disassemble, reassemble, and seal segments of systems as required to accommodate leakage testing and as required for compliance with test requirements.

B. Conduct tests, in presence of Architect, at static pressures equal to maximum design pressure of system or section being tested. If pressure classifications are not indicated, test entire system at maximum system design pressure. Do not pressurize systems above maximum design operating pressure. Give seven days' advance notice for testing.

C. Determine leakage from entire system or section of system by relating leakage to surface area of test section.

D. Maximum Allowable Leakage: Comply with requirements for Leakage Classification 3 for round and flat-oval ducts, Leakage Classification 12 for rectangular ducts in pressure classifications less than and equal to 2-inch wg (both positive and negative pressures), and Leakage Classification 6 for pressure classifications from 2- to 10-inch wg.

E. Remake leaking joints and retest until leakage is less than maximum allowable.

F. Leakage Test: Perform tests according to SMACNA's "HVAC Air Duct Leakage Test Manual."

3.7 ADJUSTING

A. Adjust volume-control dampers in ducts, outlets, and inlets to achieve design airflow.

B. Refer to Division 15 Section "Testing, Adjusting, and Balancing" for detailed procedures.

3.8 CLEANING

A. After completing system installation, including outlet fittings and devices, inspect the system. Vacuum ducts before final acceptance to remove dust and debris.

END OF SECTION 23 3113

SECTION 23 3300 - AIR DUCT ACCESSORIES

PART 1 - GENERAL

1.1 RELATED DOCUMENTS

A. Drawings and general provisions of the Contract, including General and Supplementary Conditions and Division 1 Specification Sections, apply to this Section.

1.2 SUMMARY

A. This Section includes the following:

1. Backdraft dampers.
2. Manual-volume dampers.
3. Fire and smoke dampers.
4. Duct silencers.
5. Turning vanes.
6. Duct-mounted access doors and panels.
7. Flexible ducts.
8. Flexible connectors.
9. Duct accessory hardware.

1.3 SUBMITTALS

A. Product Data: For the following:

1. Backdraft dampers.
2. Manual-volume dampers.
3. Fire and smoke dampers.
4. Duct silencers.
5. Duct-mounted access doors and panels.
6. Flexible ducts.

1.4 QUALITY ASSURANCE

A. NFPA Compliance: Comply with the following NFPA standards:

1. NFPA 90A, "Installation of Air Conditioning and Ventilating Systems."
2. NFPA 90B, "Installation of Warm Air Heating and Air Conditioning Systems."

1.5 EXTRA MATERIALS

A. Furnish extra materials described below that match products installed, are packaged with protective covering for storage, and are identified with labels describing contents.

1. Fusible Links: Furnish quantity equal to 10 percent of amount installed.

PART 2 - PRODUCTS

2.1 SHEET METAL MATERIALS

A. Galvanized, Sheet Steel: Lock-forming quality; ASTM A 653/A 653M, G90 coating designation; mill-phosphatized finish for surfaces of ducts exposed to view.

B. Carbon-Steel Sheets: ASTM A 366/A 366M, cold-rolled sheets, commercial quality, with oiled, exposed matte finish.

C. Aluminum Sheets: ASTM B 209, Alloy 3003, Temper H14, sheet form; with standard, one-side bright finish for ducts exposed to view and mill finish for concealed ducts.

D. Extruded Aluminum: ASTM B 221, Alloy 6063, Temper T6.

E. Reinforcement Shapes and Plates: Galvanized steel reinforcement where installed on galvanized, sheet metal ducts; compatible materials for aluminum and stainless-steel ducts.

F. Tie Rods: Galvanized steel, 1/4-inch minimum diameter for 36-inch length or less; 3/8-inch minimum diameter for lengths longer than 36 inches.

2.2 BACKDRAFT DAMPERS

A. Description: Suitable for horizontal or vertical installations.

B. Frame: 0.063-inch thick extruded aluminum, with mounting flange.

C. Blades: 0.050-inch thick aluminum sheet.

D. Blade Seals: Neoprene.

E. Blade Axles: Galvanized steel.

F. Tie Bars and Brackets: Aluminum.

G. Return Spring: Adjustable tension.

2.3 MANUAL-VOLUME DAMPERS

A. General: Factory fabricated with required hardware and accessories. Stiffen damper blades for stability. Include locking device to hold single-blade dampers in a fixed position without vibration. Close duct penetrations for damper components to seal duct consistent with pressure class.

1. Pressure Classifications of 3-Inch wg or Higher: End bearings or other seals for ducts with axles full length of damper blades and bearings at both ends of operating shaft.

B. Low-Leakage Volume Dampers: Multiple- or single-blade, parallel- or opposed-blade design as indicated, low-leakage rating, with linkage outside airstream, and suitable for horizontal or vertical applications.

1. Aluminum Frames: Hat-shaped, 0.063-inch thick, extruded-aluminum channels; frames with flanges where indicated for attaching to walls; and flangeless frames where indicated for installing in ducts.
2. Extruded-Aluminum Blades: 0.050-inch thick extruded aluminum.
3. Blade Seals: Neoprene.
4. Blade Axles: Galvanized steel.
5. Tie Bars and Brackets: Aluminum.

C. Jackshaft: 1-inch diameter, galvanized steel pipe rotating within a pipe-bearing assembly mounted on supports at each mullion and at each end of multiple-damper assemblies.

1. Length and Number of Mountings: Appropriate to connect linkage of each damper of a multiple-damper assembly.

D. Damper Hardware: Zinc-plated, die-cast core with dial and handle made of 3/32-inch thick zinc-plated steel, and a 3/4-inch hexagon locking nut. Include center hole to suit damper operating-rod size. Include elevated platform for insulated duct mounting.

2.4 FIRE DAMPERS

A. General: Labeled to UL 555.

B. Fire Rating: One and one-half hours.

C. Fire Rating: One and one-half and three hours.

D. Frame: SMACNA Type A with blades in airstream; fabricated with roll-formed, 0.034-inch thick galvanized steel; with mitered and interlocking corners.

E. Frame: SMACNA Type B with blades out of airstream; fabricated with roll-formed, 0.034-inch thick galvanized steel; with mitered and interlocking corners.

F. Mounting Sleeve: Factory- or field-installed galvanized, sheet steel.

1. Minimum Thickness: 0.052 inch or 0.138 inch thick as indicated, and length to suit application.
2. Exceptions: Omit sleeve where damper frame width permits direct attachment of perimeter mounting angles on each side of wall or floor, and thickness of damper frame complies with sleeve requirements.

G. Mounting Orientation: Vertical or horizontal as indicated.

H. Blades: Roll-formed, interlocking, 0.034-inch thick, galvanized, sheet steel. In place of interlocking blades, use full-length, 0.034-inch thick, galvanized steel blade connectors.

I. Horizontal Dampers: Include a blade lock and stainless-steel negator closure spring.

J. Fusible Link: Replaceable, 165 or 212 deg F rated as indicated.

2.5 CEILING FIRE DAMPERS

A. General: Labeled to UL 555C; comply with construction details for tested floor- and roof-ceiling assemblies as indicated in UL's "Fire Resistance Directory."

B. Frame: 0.040-inch thick, galvanized, sheet steel; round or rectangular; style to suit ceiling construction.

C. Blades: 0.034-inch thick, galvanized, sheet steel with nonasbestos refractory insulation.

D. Volume Adjustment: UL-labeled, fusible volume-control adjustment.

E. Fusible Link: Replaceable, 165 deg F rated.

2.6 SMOKE DAMPERS

A. General: Labeled to UL 555S. Combination fire and smoke dampers shall be labeled for one-and-one-half-hour rating to UL 555.

B. Fusible Link: Replaceable, 165 or 212 deg F rated as indicated.

C. Frame and Blades: 0.064-inch thick, galvanized, sheet steel.

D. Mounting Sleeve: Factory-installed, 0.052-inch thick, galvanized, sheet steel; length to suit wall or floor application.

2.7 TURNING VANES

A. Fabricate to comply with SMACNA's "HVAC Duct Construction Standards--Metal and Flexible."

B. Manufactured Turning Vanes: Fabricate of 1-1/2-inch wide, curved blades set 3/4 inch o.c.; support with bars perpendicular to blades set 2 inches o.c.; and set into side strips suitable for mounting in ducts.

C. Acoustic Turning Vanes: Fabricate of airfoil-shaped aluminum extrusions with perforated faces and fibrous-glass fill.

2.8 DUCT-MOUNTED ACCESS DOORS AND PANELS

A. General: Fabricate doors and panels airtight and suitable for duct pressure class.

B. Frame: Galvanized, sheet steel, with bend-over tabs and foam gaskets.

C. Door: Double-wall, galvanized, sheet metal construction with insulation fill and thickness, and number of hinges and locks as indicated for duct pressure class. Include vision panel where indicated. Include 1-by-1-inch butt or piano hinge and cam latches.

D. Seal around frame attachment to duct and door to frame with neoprene or foam rubber.

E. Insulation: 1-inch thick, fibrous-glass or polystyrene-foam board.

2.9 FLEXIBLE CONNECTORS

A. General: Flame-retarded or noncombustible fabrics, coatings, and adhesives complying with UL 181, Class 1.

B. Standard Metal-Edged Connectors: Factory fabricated with a strip of fabric 3-1/2 inches wide attached to two strips of 2-3/4-inch wide, 0.028-inch thick, galvanized, sheet steel or 0.032-inch aluminum sheets. Select metal compatible with connected ducts.

C. Extra-Wide Metal-Edged Connectors: Factory fabricated with a strip of fabric 5-3/4 inches wide attached to two strips of 2-3/4-inch wide, 0.028-inch thick, galvanized, sheet steel or 0.032-inch aluminum sheets. Select metal compatible with connected ducts.

D. Transverse Metal-Edged Connectors: Factory fabricated with a strip of fabric 3-1/2 inches wide attached to two strips of 4-3/8-inch wide, 0.028-inch thick, galvanized, sheet steel or 0.032-inch aluminum sheets. Select metal compatible with connected ducts.

E. Conventional, Indoor System Flexible Connector Fabric: Glass fabric double coated with polychloroprene.

1. Minimum Weight: 26 oz./sq. yd.
2. Tensile Strength: 480 lbf/inch in the warp, and 360 lbf/inch in the filling.

F. Conventional, Outdoor System Flexible Connector Fabric: Glass fabric double coated with a synthetic-rubber, weatherproof coating resistant to the sun's ultraviolet rays and ozone environment.

1. Minimum Weight: 26 oz./sq. yd.
2. Tensile Strength: 530 lbf/inch in the warp, and 440 lbf/inch in the filling.

G. High-Temperature System Flexible Connectors: Glass fabric coated with silicone rubber and having a minimum weight of 16 oz./sq. yd. and tensile strength of 285 lbf/inch in the warp, and 185 lbf/inch in the filling.

H. High-Corrosive-Environment System Flexible Connectors: Glass fabric coated with a chemical-resistant coating.

1. Minimum Weight: 14 oz./sq. yd.
2. Tensile Strength: 450 lbf/inch in the warp, and 340 lbf/inch in the filling.

2.10 FLEXIBLE DUCTS

A. General: Comply with UL 181, Class 1.

B. Flexible Ducts, Uninsulated: Spiral-wound steel spring with flameproof vinyl sheathing.

C. Flexible Ducts, Insulated: Factory-fabricated, insulated, round duct, with an outer jacket enclosing 1-1/2-inch thick, glass-fiber insulation around a continuous inner liner.

1. Reinforcement: Steel-wire helix encapsulated in inner liner.
2. Outer Jacket: Glass-reinforced, silver Mylar with a continuous hanging tab, integral fibrous-glass tape, and nylon hanging cord.
3. Inner Liner: Polyethylene film.

D. Pressure Rating: 6-inch wg positive, 1/2-inch wg negative.

2.11 ACCESSORY HARDWARE

A. Instrument Test Holes: Cast iron or cast aluminum to suit duct material, including screw cap and gasket. Size to allow insertion of pitot tube and other testing instruments, and length to suit duct insulation thickness.

B. Splitter Damper Accessories: Zinc-plated damper blade bracket; 1/4-inch, zinc-plated operating rod; and a duct-mounted, ball-joint bracket with flat rubber gasket and square-head set screw.

C. Flexible Duct Clamps: Stainless-steel band with cadmium-plated hex screw to tighten band with a worm-gear action, in sizes 3 to 18 inches to suit duct size.

D. Adhesives: High strength, quick setting, neoprene based, waterproof, and resistant to gasoline and grease.

PART 3 - EXECUTION

3.1 INSTALLATION

A. Install duct accessories according to applicable details shown in SMACNA's "HVAC Duct Construction Standards--Metal and Flexible" for metal ducts and NAIMA's "Fibrous Glass Duct Construction Standards" for fibrous-glass ducts.

B. Install volume dampers in lined duct; avoid damage to and erosion of duct liner.

C. Provide test holes at fan inlet and outlet and elsewhere as indicated.

D. Install fire and smoke dampers according to manufacturer's UL-approved written instructions.

1. Install fusible links in fire dampers.

E. Install duct access panels for access to both sides of duct coils. Install duct access panels downstream from volume dampers, fire dampers, turning vanes, and equipment.

1. Install duct access panels to allow access to interior of ducts for cleaning, inspecting, adjusting, and maintaining accessories and terminal units.
2. Install access panels on side of duct where adequate clearance is available.

F. Label access doors according to Division 15 Section "Mechanical Identification."

3.2 ADJUSTING

A. Adjust duct accessories for proper settings.

B. Adjust fire and smoke dampers for proper action.

C. Final positioning of manual-volume dampers is specified in Division 15 Section "Testing, Adjusting, and Balancing."

END OF SECTION 23 3300

SECTION 23 3416 - CENTRIFUGAL HVAC FANS

PART 1 - GENERAL

1.1 RELATED DOCUMENTS

A. Drawings and general provisions of the Contract, including General and Supplementary Conditions and Division 1 Specification Sections, apply to this Section.

1.2 SUMMARY

A. This Section includes centrifugal fans.

1.3 PERFORMANCE REQUIREMENTS

A. Project Altitude: Base air ratings on actual site elevations.

B. Operating Limits: Classify according to AMCA 99.

1.4 SUBMITTALS

A. Product Data: Include rated capacities, furnished specialties, and accessories for each type of product indicated and include the following:

1. Certified fan performance curves with system operating conditions indicated.
2. Certified fan sound-power ratings.
3. Motor ratings and electrical characteristics, plus motor and electrical accessories.
4. Material gages and finishes, including color charts.
5. Dampers, including housings, linkages, and operators.

B. Shop Drawings: Detail equipment assemblies and indicate dimensions, weights, loads, required clearances, method of field assembly, components, and location and size of each field connection.

1. Wiring Diagrams: Power, signal, and control wiring. Differentiate between manufacturer-installed and field-installed wiring.

C. Maintenance Data: For centrifugal fans to include in maintenance manuals.

1.5 QUALITY ASSURANCE

A. Electrical Components, Devices, and Accessories: Listed and labeled as defined in NFPA 70, Article 100, by a testing agency acceptable to authorities having jurisdiction, and marked for intended use.

B. AMCA Compliance: Products shall comply with performance requirements and shall be licensed to use the AMCA-Certified Ratings Seal.

C. NEMA Compliance: Motors and electrical accessories shall comply with NEMA standards.

1.6 DELIVERY, STORAGE, AND HANDLING

A. Deliver fans as factory-assembled units, to the extent allowable by shipping limitations, with protective crating and covering.

B. Disassemble and reassemble units, as required for moving to the final location, according to manufacturer's written instructions.

C. Lift and support units with manufacturer's designated lifting or supporting points.

1.7 COORDINATION

A. Coordinate size and location of structural-steel support members.

B. Coordinate installation of roof curbs, equipment supports, and roof penetrations.

1.8 EXTRA MATERIALS

A. Furnish extra materials described below that match products installed and that are packaged with protective covering for storage and identified with labels describing contents.

1. Belts: One set for each belt-driven unit.

PART 2 - PRODUCTS

2.1 MANUFACTURED UNITS

A. Description: Factory-fabricated, -assembled, -tested, and -finished, belt-driven centrifugal fans consisting of housing, wheel, fan shaft, bearings, motor and disconnect switch, drive assembly, and support structure.

2.2 ACCESSORIES

A. Companion Flanges: Galvanized steel, for duct connections.

B. Discharge Dampers: Heavy-duty steel assembly with parallel blades constructed of two plates formed around and welded to shaft, channel frame, sealed ball bearings, with blades linked outside of airstream to single control lever.

C. Inlet Screens: Galvanized steel welded grid screen.

2.3 MOTORS

A. Motor Construction: NEMA MG 1, general purpose, continuous duty, Design B.

2.4 SOURCE QUALITY CONTROL

A. Sound-Power Level Ratings: Comply with AMCA 301, "Methods for Calculating Fan Sound Ratings from Laboratory Test Data." Factory test fans according to AMCA 300, "Reverberant Room Method for Sound Testing of Fans." Label fans with the AMCA-Certified Ratings Seal.

B. Fan Performance Ratings: Establish flow rate, pressure, power, air density, speed of rotation, and efficiency by factory tests and ratings according to AMCA 210, "Laboratory Methods of Testing Fans for Rating."

PART 3 - EXECUTION

3.1 INSTALLATION

A. Install centrifugal fans level and plumb.

B. Support floor-mounting units using rubber isolators.

C. Install units with clearances for service and maintenance.

3.2 CONNECTIONS

A. Duct installation and connection requirements are specified in other Division 15 Sections. Drawings indicate general arrangement of ducts and duct accessories. Make final duct connections with flexible connectors.

B. Install ducts adjacent to fans to allow service and maintenance.

C. Ground equipment.

D. Tighten electrical connectors and terminals according to manufacturer's published torque-tightening values. If manufacturer's torque values are not indicated, use those specified in UL 486A and UL 486B.

3.3 FIELD QUALITY CONTROL

A. Equipment Startup Checks:

1. Verify that shipping, blocking, and bracing are removed.
2. Verify that unit is secure on mountings and supporting devices and that connections to ducts and electrical components are complete. Verify that proper thermal-overload protection is installed in motors, starters, and disconnect switches.
3. Verify that cleaning and adjusting are complete.
4. Disconnect fan drive from motor, verify proper motor rotation direction, and verify fan wheel free rotation and smooth bearing operation. Reconnect fan drive system, align and adjust belts, and install belt guards.
5. Verify lubrication for bearings and other moving parts.

B. Starting Procedures:

1. Energize motor and adjust fan to indicated rpm.
2. Measure and record motor voltage and amperage.

C. Operational Test: After electrical circuitry has been energized, start units to confirm proper motor rotation and unit operation. Remove malfunctioning units, replace with new units, and retest.

D. Test and adjust controls and safeties. Replace damaged and malfunctioning controls and equipment.

3.4 ADJUSTING

A. Adjust damper linkages for proper damper operation.

B. Adjust belt tension.

C. Lubricate bearings.

3.5 CLEANING

A. On completion of installation, internally clean fans according to manufacturer's written instructions. Remove foreign material and construction debris. Vacuum fan wheel and cabinet.

B. After completing system installation, including outlet fitting and devices, inspect exposed finish. Remove burrs, dirt, and construction debris and repair damaged finishes.

END OF SECTION 23 3416

SECTION 23 3713 - DIFFUSERS, REGISTERS, AND GRILLES

PART 1 - GENERAL

1.1 RELATED DOCUMENTS

A. Drawings and general provisions of the Contract, including General and Supplementary Conditions and Division 1 Specification Sections, apply to this Section.

1.2 SUMMARY

A. This Section includes ceiling- and wall-mounted diffusers, registers, and grilles.

1.3 DEFINITIONS

A. Diffuser: Circular, square, or rectangular air distribution outlet, generally located in the ceiling and comprised of deflecting members discharging supply air in various directions and planes and arranged to promote mixing of primary air with secondary room air.

B. Grille: A louvered or perforated covering for an opening in an air passage, which can be located in a sidewall, ceiling, or floor.

C. Register: A combination grille and damper assembly over an air opening.

1.4 SUBMITTALS

A. Product Data: For each model indicated, include the following:

1. Data Sheet: For each type of air outlet and inlet, and accessory furnished; indicate construction, finish, and mounting details.
2. Performance Data: Include throw and drop, static-pressure drop, and noise ratings for each type of air outlet and inlet.
3. Schedule of diffusers, registers, and grilles indicating drawing designation, room location, quantity, model number, size, and accessories furnished.

1.5 QUALITY ASSURANCE

A. Product Options: Drawings and schedules indicate specific requirements of diffusers, registers, and grilles and are based on the specific requirements of the systems indicated. Other manufacturers' products with equal performance characteristics may be considered.

B. NFPA Compliance: Install diffusers, registers, and grilles according to NFPA 90A, "Standard for the Installation of Air-Conditioning and Ventilating Systems."

PART 2 - PRODUCTS

2.1 See equipment schedule on contract drawings.

A. Testing: Test performance according to ASHRAE 70, "Method of Testing for Rating the Performance of Air Outlets and Inlets."

PART 3 - EXECUTION

3.1 EXAMINATION

A. Examine areas where diffusers, registers, and grilles are to be installed for compliance with requirements for installation tolerances and other conditions affecting performance of equipment. Do not proceed with installation until unsatisfactory conditions have been corrected.

3.2 INSTALLATION

A. Install diffusers, registers, and grilles level and plumb, according to manufacturer's written instructions, Coordination Drawings, original design, and referenced standards.

B. Ceiling-Mounted Outlets and Inlets: Drawings indicate general arrangement of ducts, fittings, and accessories. Air outlet and inlet locations have been indicated to achieve design requirements for air volume, noise criteria, airflow pattern, throw, and pressure drop. Make final locations where indicated, as much as practicable. Where architectural features or other items conflict with installation, notify Architect for a determination of final location.

C. Install diffusers, registers, and grilles with airtight connection to ducts and to allow service and maintenance of dampers, air extractors, and fire dampers.

3.3 ADJUSTING

A. After installation, adjust diffusers, registers, and grilles to air patterns indicated, or as directed, before starting air balancing.

3.4 CLEANING

A. After installation of diffusers, registers, and grilles, inspect exposed finish. Clean exposed surfaces to remove burrs, dirt, and smudges. Replace diffusers, registers, and grilles that have damaged finishes.

END OF SECTION 23 3713

SECTION 23 7413 – PACKAGED, OUTDOOR, CENTRAL-STATION AIR-HANDLING UNITS

PART 1 - GENERAL

1.1 RELATED DOCUMENTS

A. Drawings and general provisions of the Contract, including General and Supplementary Conditions and other Division 1 Specification Sections, apply to this Section.

1.2 SUMMARY

A. This Section includes rooftop heating and cooling units.

1.3 SUBMITTALS

A. Product Data: Include manufacturer's technical data for each model indicated, including rated capacities of selected model clearly indicated; dimensions; required clearances; shipping, installed, and operating weights; furnished specialties; accessories; and installation and startup instructions.

B. Shop Drawings: Detail equipment assemblies and indicate dimensions, weights, loadings, required clearances, method of field assembly, components, and location and size of each field connection. Detail mounting, securing, and flashing of roof curb to roof structure. Indicate coordinating requirements with roof membrane system.

1. Wiring Diagrams: Detail wiring for power, signal, and control systems and differentiate between manufacturer-installed and field-installed wiring.

C. Maintenance Data: For equipment to include in the maintenance manuals.

D. Warranties: Special warranties specified in this Section.

1.4 QUALITY ASSURANCE

A. Fabricate and label refrigeration system to comply with ASHRAE 15, "Safety Code for Mechanical Refrigeration."

B. Energy Efficiency Ratio: Equal to or greater than prescribed by ASHRAE 90.1, "Energy Efficient Design of New Buildings except Low-Rise Residential Buildings."

C. Coefficient of Performance: Equal to or greater than prescribed by ASHRAE 90.1, "Energy Efficient Design of New Buildings except Low-Rise Residential Buildings."

D. Listing and Labeling: Provide electrically operated components specified in this Section that are listed and labeled.

1. The Terms "Listed" and "Labeled": As defined in the National Electrical Code, Article 100.
2. Listing and Labeling Agency Qualifications: A "Nationally Recognized Testing Laboratory" as defined in OSHA Regulation 1910.7.

E. Comply with AGA Z223.1 for gas-fired furnace section.

F. Comply with NFPA 70.

1.5 DELIVERY, STORAGE, AND HANDLING

A. Deliver rooftop units as factory-assembled units with protective crating and covering.

B. Coordinate delivery of units in sufficient time to allow movement into building.

C. Handle rooftop units to comply with manufacturer's written rigging and installation instructions for unloading and moving to final location.

1.6 COORDINATION

A. Coordinate installation of roof curbs, equipment supports, and roof penetrations with roof construction.

1.7 WARRANTY

A. General Warranty: The special warranty specified in this Article shall not deprive the Owner of other rights the Owner may have under other provisions of the Contract Documents and shall be in addition to, and run concurrent with, other warranties made by the Contractor under requirements of the Contract Documents.

B. Special Warranty: A written warranty, executed by the manufacturer and signed by the Contractor, agreeing to replace components that fail in materials or workmanship, within the specified warranty period, provided manufacturer's written instructions for installation, operation, and maintenance have been followed.

1. Warranty Period, Compressors: Manufacturers standard, but not less than 5 years after date of Substantial Completion.
2. Warranty Period, Heat Exchangers: Manufacturers standard, but not less than 10 years after date of Substantial Completion.

1.8 EXTRA MATERIALS

A. Furnish extra materials described below that match products installed, are packaged with protective covering for storage, and are identified with labels describing contents.

1. Fan Belts: One set for each belt-drive fan.
2. Filters: One set of filters for each unit.

PART 2 - PRODUCTS

2.1 ROOFTOP UNITS SMALLER THAN 6 TONS

A. Description: Factory assembled and tested; designed for roof or slab installation; and consisting of compressors, condensers, evaporator coils, condenser and evaporator fans, refrigeration and temperature controls, filters, and dampers.

B. Casing: Manufacturer's standard construction with corrosion-protection coating and exterior finish, removable panels or access doors with neoprene gaskets for inspection and access to internal parts, minimum 1/2-inch thick thermal insulation, knockouts for electrical and piping connections, exterior condensate drain connection, and lifting lugs.

C. Evaporator Fans: Forward curved, centrifugal, directly driven with permanently lubricated motor bearings.

D. Condenser Fans: Propeller type, directly driven with permanently lubricated motor bearings.

E. Refrigerant Coils: Aluminum-plate fin and seamless copper tube in galvanized steel casing with equalizing-type vertical distributor.

F. Compressors: Hermetic with integral vibration isolators and crankcase heaters.

G. Heat Exchangers: Manufacturer's standard construction for gas-fired heat exchangers and burners with the following controls:

1. Redundant gas valves.
2. Intermittent pilot ignition.
3. Electronic-spark ignition system.
4. High-limit cutout.
5. Forced-draft proving switch.

H. Economizer Control: Return- and outside-air dampers, outside-air filter, fully modulating electronic-control system with adjustable mixed-air thermostat and automatic changeover.

I. Low Ambient Control: Head-pressure control, designed to operate at temperatures as low as 30 deg F.

J. Thermostat: Staged heating and cooling with manual or automatic changeover on standard subbase.

K. Thermostat: Programmable, electronic; with heating setback and cooling setup with 7-day programming.

2.2 ROOFTOP UNITS, 7-1/2 TO 20 TONS

A. Description: Factory assembled and tested; designed for roof or slab installation; and consisting of compressors, condensers, evaporator coils, condenser and evaporator fans, refrigeration and temperature controls, filters, and dampers.

B. Casing: Manufacturer's standard construction with corrosion-protection coating and exterior finish, removable panels or access doors with neoprene gaskets for inspection and access to internal parts, minimum 1/2-inch thick thermal insulation, knockouts for electrical and piping connections, exterior condensate drain connection, and lifting lugs.

C. Evaporator Fans: Forward curved, centrifugal, belt driven with adjustable sheaves or direct-drive fans; and with permanently lubricated motor bearings.

D. Exhaust/Relief Fans: Forward-curved, centrifugal or propeller type, directly driven with permanently lubricated motor bearings.

E. Condenser Fans: Propeller type, directly driven with permanently lubricated motor bearings.

F. Refrigerant Coils: Aluminum-plate fin and seamless copper tube in galvanized steel casing with equalizing-type vertical distributor.

G. Compressors: Serviceable, semihermetic, or fully hermetic compressors with integral vibration isolators and crankcase heaters.

1. Safety Controls: Manual-reset type for low pressure, high pressure, and compressor motor overload protection.
2. Hot-Gas Bypass: Factory-installed valve.
3. Timed-Off Control: Automatic-reset control shuts compressor off after 5 minutes.

H. Heat Exchangers: Manufacturer's standard construction for gas-fired heat exchangers and burners with the following controls:

1. Redundant, dual gas valves (2-stage heating).
2. Intermittent pilot ignition.
3. Electronic-spark ignition system.
4. High-limit cutout.
5. Forced-draft proving switch.

I. Economizer Control: Return- and outside-air dampers, outside-air filter, fully modulating electronic-control system with adjustable mixed-air thermostat and automatic changeover through adjustable enthalpy-control device.

J. Variable-Air-Volume Control: Electric discharge-air-temperature step controller and electronic-control system.

K. Low Ambient Control: Head-pressure control, designed to operate at temperatures as low as 30 deg F.

L. Thermostat: Programmable, electronic; with heating setback and cooling setup with 7-day programming.

M. Smoke Detectors: Photoelectric detector located in return-air plenum, to de-energize unit.

N. Operating Controls: Factory-installed microprocessor controls and monitors unit and communicates with central control processor.

1. Control Outputs: 2-stage heating, 2-stage cooling; and automatic or continuous fan operation and economizer damper operation.
2. Control Sensors: Return-air-temperature sensor, fan airflow-proving switch, dirty-filter switch, discharge-air-temperature sensor, room-temperature sensor, and night-setback-override switch.
3. Control Features: Day/occupied modes for high or low enthalpy and night/unoccupied mode.

2.3 ROOF CURBS

A. Manufacturer's standard, insulated with corrosion-protection coating, gasketing, factory-installed wood nailer, according to NRCA standards.

1. Curb Height: Minimum 16 inches.
2. Isolation Curb: Rigid upper and lower steel structure with vibration isolation springs and vertical and horizontal restraints; with elastomeric waterproof membrane. 2-inch static deflection.

2.4 MOTORS

A. Motor Construction: NEMA MG 1, general purpose, continuous duty, Design B.

B. Enclosure Type: Open, dripproof.

2.5 SOURCE QUALITY CONTROL

A. Verification of Performance: Rate capacity according to ARI 210/240, "Unitary Air-Conditioning and Air Source Heat Pump Equipment."

B. Verification of Performance: Rate capacity according to ARI 360, "Commercial and Industrial Unitary Air-Conditioning Equipment."

1. Sound Power Level Ratings: Comply with ARI 270, "Standard for Sound Rating of Outdoor Unitary Equipment."

PART 3 - EXECUTION

3.1 EXAMINATION

A. Examine roof for compliance with requirements for conditions affecting installation and performance of rooftop units. Do not proceed with installation until unsatisfactory conditions have been corrected.

3.2 INSTALLATION

A. Install units according to manufacturer's written instructions.

B. Install units level and plumb, maintaining manufacturer's recommended clearances.

C. Curb Support: Install roof curb on roof structure, level, according to NRCA's written installation instructions. Install and secure rooftop units on curbs and coordinate roof penetrations and flashing with roof construction.

D. Unit Support: Install unit on structural curbs and level. Coordinate wall penetrations and flashing with wall construction.

3.3 CONNECTIONS

A. Piping installation requirements are specified in other Division 15 Sections. Drawings indicate the general arrangement of piping, fittings, and specialties. The following are specific connection requirements:

1. Install piping to allow service and maintenance.
2. Gas Piping: Connect gas piping to burner, full size of gas train inlet, and provide union with sufficient clearance for burner removal and service.

B. Duct installation requirements are specified in other Division 15 Sections. Drawings indicate the general arrangement of ducts. The following are specific connection requirements:

1. Install ducts to termination in roof mounting frames. Where indicated, terminate return-air duct through roof structure and insulate space between roof and bottom of unit.

C. Electrical: Conform to applicable requirements in Division 16 Sections.

D. Ground equipment.

1. Tighten electrical connectors and terminals according to manufacturer's published torque-tightening values. Where manufacturer's torque values are not indicated, use those specified in UL 486A and UL 486B.

3.4 COMMISSIONING

A. Verify that installation is as indicated and specified.

B. Complete manufacturer's installation and startup checks and perform the following:

1. Level unit on housekeeping base, and flash curbs to unit and to roof.
2. Inspect for visible damage to unit casing.
3. Inspect for visible damage to furnace combustion chamber.
4. Inspect for visible damage to compressor, air-cooled condenser coil, and fans.
5. Verify that clearances have been provided for servicing.
6. Check that labels are clearly visible.
7. Clean furnace flue and condenser and inspect for construction debris.
8. Verify that controls are connected and operable.
9. Remove shipping bolts, blocks, and tie-down straps.
10. Verify that filters are installed.
11. Adjust vibration isolators.
12. Connect and purge gas line.
13. Check that burner and controls are suitable to operate at temperatures as low as minus 40 deg F.
14. Check acoustic insulation.
15. Check operation of barometric dampers.

C. Lubricate bearings on fan.

D. Check fan-wheel rotation for correct direction without vibration and binding.

E. Adjust fan belts to proper alignment and tension.

F. Start unit according to manufacturer's written instructions.

1. Perform starting of refrigeration in summer only.
2. Complete startup sheets and attach copy with Contractor's startup report.

G. Check and record performance of interlocks and protection devices; verify sequences.

H. Operate unit for an initial period as recommended or required by manufacturer.

I. Perform the following operations for both minimum and maximum firing, and adjust burner for peak efficiency. Adjust pilot to stable flame.

1. Measure gas pressure on manifold.
2. Measure combustion-air temperature at inlet to combustion chamber.
3. Measure flue-gas temperature at furnace discharge.

4. Perform flue-gas analysis. Measure and record flue-gas carbon dioxide and oxygen concentration.
5. Measure supply-air temperature and volume when burner is at maximum firing rate and when burner is off. Calculate useful heat to supply air.
6. Check for backdraft under full operation.

J. Calibrate thermostats.

K. Adjust and check high-temperature limits.

L. Check internal isolators.

M. Check outside-air damper for proper stroke and interlock with return-air dampers.

N. Check controls for correct sequencing of heating, mixing dampers, refrigeration, and normal and emergency shutdown.

O. Start refrigeration and measure and record the following:

1. Coil leaving-air, dry- and wet-bulb temperatures.
2. Coil entering-air, dry- and wet-bulb temperatures.
3. Outside-air, dry-bulb temperature.
4. Air-cooled-condenser, discharge-air, dry-bulb temperature.

P. Measure and record the following minimum and maximum airflows. Plot fan volumes on fan curve.

1. Supply-air volume.
2. Return-air volume.
3. Relief-air volume.
4. Outside-air intake volume.

Q. Simulate maximum cooling demand and check the following:

1. Compressor refrigerant suction and hot-gas pressures.
2. Short circuiting air through condenser or from condenser to outside-air intake.

R. After starting and performance testing, change filters, vacuum heat exchanger and cooling and condenser coils, lubricate bearings, adjust belt tension, and check operation of power vents.

3.5 DEMONSTRATION

A. Engage a factory-authorized service representative to train Owner's maintenance personnel as specified below:

1. Train Owner's maintenance personnel on procedures and schedules related to startup and shutdown, troubleshooting, servicing, and preventive maintenance.
2. Review data in the maintenance manuals.

END OF SECTION 23 7413

SECTION 26 16 05
ELECTRICAL WORK

PART 1 - GENERAL

1.1 SECTION INCLUDES

A. Service Entrance Equipment
B. Conduit
C. Wire and Cable
D. Boxes
E. Wiring Devices
F. Enclosures
G. Grounding and Bonding
H. Disconnect Switches
I. Panelboards
J. Motor Control Equipment
K. Light Fixtures

1.2 REFERENCES

A. General
   1. ANSI/NFPA 70 - National Electrical Code.
   2. ANSI C2 - National Electrical Safety Code.
   3. Underwriters Laboratories, Inc. (UL)
B. Service Entrance Equipment
   1. Public Service Company of New Mexico

1.3 SUBMITTALS

A. Provide technical data for the following items. Data shall substantiate compliance with the requirements of the Specifications and Drawings and shall include, but not be limited to, ratings, material type, construction, listings and/or certifications, and color. Catalog data or "cut-sheets" which contain information on several products/items should be marked to clearly indicate the specific product or material proposed for this project.
   1. Service entrance equipment.
   2. Disconnect switches including fuses.
   3. Panelboards.
   3. Light fixtures including ballasts and lamps.

1.4 REGULATORY REQUIREMENTS

A. Conform to applicable Building Code for the City of Santa Fe and the State of New Mexico.
B. Conform to ANSI/NFPA 70.

C. Obtain permits and request inspections from authority having jurisdiction.
D. Conform to applicable UL requirements for each product indicated.

PART 2 - PRODUCTS

2.1 SERVICE ENTRANCE EQUIPMENT

A. Service Disconnect Switch and Overcurrent Protection
   1. Description: As noted on Drawings.
   2. Listing: UL listed Service Entrance Equipment.

2.2 WIRE AND CABLE

A. Building Wire and Cable
   1. Description: Single conductor insulated wire.
   2. Conductor: Copper.
   3. Insulation:
      a. Voltage Rating: 600 volt.
      b. Type: NEMA WC 5, Type THHN/THWN.
      c. Color:
         (1) #10 AWG and Smaller: Solid color compound throughout conductor length.
         (2) #8 AWG and Larger: 3M Scotch "35 Vinyl Plastic" electrical color coding tape, 3/4" wide, extended a minimum of 2 inches along conductor insulation..

2.3 BOXES

A. Sheet Metal Boxes: ANSI/NEMA OS 1, galvanized steel; rated for weight of equipment supported; include 1/2 inch male fixture studs where required; grounding terminal.
B. Cast Boxes: ANSI/NEMA FB 1, Type "FD" cast feralloy, threaded hubs, grounding terminal, gasketed cover.

2.4 WIRING DEVICES

A. Wall Switches
   1. Type: NEMA WD 1, FS W-S-896E, specification grade toggle switch; white handle.
   2. Rating: 20 Amperes at 120-277 Volts AC.

B. Receptacles
   1. Type: NEMA WD 1, FS W-C-596, specification grade self-grounding receptacle with grounding terminal on body; white face.
   2. Configuration: NEMA WD 6, Type 5-20R.

C. Device Cover Plates
   1. Dry Interior Locations: Type 302 specification grade smooth stainless steel, jumbo size.
   2. Exterior or Wet Interior Locations: Gasketed cast metal with hinged gasketed device cover.

2.5 ENCLOSURES

A. NEMA Type 1 Hinged Cover Enclosure
   1. Construction: NEMA 250, Type 1, steel, minimum 16 gauge.
   2. Finish: Polyester powder coating over phosphatized surface.
   3. Cover: Door with continuous steel hinge, held closed by flush latch operable with screwdriver.

2.6 GROUNDING AND BONDING

A. Rod Electrode (Ground Rod)
   1. Material: Copper.
   2. Diameter: 3/4 inch.
   3. Length: 10 feet.

B. Raceway Conductor
   1. Description:
      a. #10 AWG and Smaller: Single conductor insulated wire.
      b. #8 AWG and Larger: Single conductor bare wire; stranded.
   2. Conductor: Copper.
   3. #10 AWG and Smaller Conductor Insulation:
      a. Voltage Rating: 600 volt.
      b. Type: NEMA WC 5, Type THHN/THWN.
      c. Color: Green solid color compound throughout conductor length.
      d. Listing: UL listed.

2.7 DISCONNECT SWITCHES

A. Switch Assemblies: NEMA KS 1, Type HD, FS W-S-865, heavy duty, quick-make, quick-break, load interrupter enclosed knife switch with externally operable handle interlocked to prevent opening front cover with switch in ON position. Handle lockable

in OFF position.

B. Fuse clips: FS W-F-870. Designed to accommodate Class R fuses.
C. Fuses: ANSI/UL 198E, Class RK1, dual-element, current limiting, time delay.
D. Enclosures: NEMA KS 1, Type 1 for dry interior locations; Type 3R for exterior or wet interior locations. Provide with factory or field installed equipment grounding kit.
E. Listing: UL listed.

2.8 PANELBOARDS

A. Type: NEMA PB 1, circuit breaker type. FS W-P-115, Type I, Class 1.
B. Enclosure: NEMA PB 1, Type 12 for dry interior locations, Type 3R/12 for exterior or wet interior locations, unless otherwise noted.
C. Bus: Copper.
D. Circuit Breakers: NEMA AB 1, FS W-C-375, molded case, thermal magnetic trip, bolt-on type, full-size, common internal trip for multi-pole breakers, SWD rated for lighting circuits, HID rated for 120/208 volt HID lighting circuits. Tandem breakers are not acceptable.

2.9 MOTOR CONTROL EQUIPMENT

A. Fractional Horsepower Manual Motor Starter: NEMA ICS 2, AC general purpose Class A manually operated, 2 pole, full-voltage controller for fractional horsepower induction motors, with thermal overload unit, red pilot light, and toggle operator with lock-off provisions. Enclosure: NEMA ICS 6, Type 1 for dry interior locations, Type 4 for exterior or wet interior locations.
B. Fractional Horsepower Manual Motor Starting Switch: Same as Fractional Horsepower Manual Motor Starter without thermal overload unit.

2.10 LIGHT FIXTURES

A. Light Fixtures: As scheduled on Drawings.
B. LED drivers:
   1. Fluorescent: ANSI C82.1, UL listed, CBM certified, Class P, electronic.

PART 3 - EXECUTION

3.1 GENERAL

A. Perform Work in accordance with ANSI/NFPA 70.
B. Install equipment and products in accordance with manufacturer’s instructions.

3.2 SERVICE ENTRANCE EQUIPMENT

A. Install meter enclosure in accordance with electric metering requirements of the Public Service Company of New Mexico.

3.3 CONDUIT

A. Schedule
   1. Above Grade Conduit Installations:
      a. Dry Interior Locations:
         (1) Size: 1/2 inch minimum.
         (2) Type:
            (a) 1/2 inch through 2 inch: Electrical metallic tubing (EMT).
            (b) Larger than 2 inch: Metal conduit (RGS).
         (3) Exterior or Wet Interior Locations:
            (a) Size: 1/2 inch minimum.
            (b) Type: Metal conduit (RGS).
   2. Flexible Metal Conduit: Use for connection to recessed and pendant mounted light fixtures. Restrict maximum length to 72 inches.
   3. Liquidtight Flexible Metal Conduit: Use for connection to dry-type transformers, mechanical equipment, instruments, and devices which produce vibration. Restrict maximum length to 24 inches.
B. Installation
   1. General
      a. Install conduit in accordance with NECA "Standard of Installation."
      b. Install no more than the equivalent of four 90 degree bends between conduit terminations for 1/2 inch through 1 inch conduit size, three bends for 1-1/4 inch through 2 inch conduit, and two bends for conduit 2-1/2 inch and larger. Provide pull boxes, if necessary to meet these requirements.
      c. Maintain minimum 6 inch clearance between conduit and piping.
      d. Maintain minimum 12 inch clearance between conduit and surfaces with temperature exceeding 104 degrees F (40 degrees C).
      e. Support conduit at a maximum of 4 feet on center and within one foot of elbow, bend, change of direction, and box.
      f. Use grounding bushings on metallic conduit terminations.
      g. Use conduit hubs to fasten metal conduit (RGS) to sheet metal enclosures.
      h. Install fittings to accommodate expansion where conduit crosses building control and expansion joints.
      i. Use suitable conduit caps to protect installed conduit against entrance of dirt and moisture.
      j. Provide pull string in each empty conduit.
   2. Above Grade Conduit
      a. Route conduit parallel and perpendicular to walls.
      b. Route conduit to maintain headroom and present neat appearance.
      c. Route conduit through roof using flashing and sealants.

3.4 BRANCH CIRCUIT CONDUIT

A. Run wiring for receptacle and lighting circuits in conduit sized in accordance with the National Electrical Code, unless otherwise indicated.

3.5 WIRE AND CABLE

A. Run wiring in raceways, unless otherwise indicated on Drawings.
B. Pull all conductors into raceway at same time.
C. Use suitable wiring pulling lubricant for building wire #4 AWG and larger.
D. Install pull string in empty conduits.
E Communication Cables:
    1. Route cable in conduit as shown on the Drawings.
    2. Cable shall be continuous from outlet jack to connecting blocks in closet.
    3. No splicing shall be permitted.
    4. Terminate cable at outlet jacks and connecting blocks.

3.6 BRANCH CIRCUIT WIRING

A. Provide number of phase and neutral conductors required to implement circuiting shown on Drawings, unless otherwise noted.
B. Size neutral conductor same size as phase conductors, unless otherwise noted.
C. Provide a separate equipment ground conductor in each raceway. Size equipment ground conductor same size as phase conductors, unless otherwise noted.
D. Place an equal number of conductors for each phase of a circuit in same raceway.
E. Two or three branch circuits of different phases may not share a common neutral, except as otherwise indicated.
F. Use #12 AWG conductor for 20 Amp branch circuits which have <u>not</u> been identified on the Drawings.

3.7 BOXES

A. Schedule:
    1. Interior Dry Locations: Sheet Metal Boxes.
    2. Exterior of Wet Interior Locations: Cast Boxes.

3.8 WIRING DEVICES

A. Install wall switches 4'-0" inches above finished floor to bottom of box, "OFF" position down, unless otherwise noted.
B. Install receptacles 1'-6" inches above finished floor to bottom of box, grounding pole on top, unless otherwise noted.
C. Install telephone/data outlets in accordance with manufacturer's instructions. Install

telephone jack at the bottom of outlet and data jack at the top of outlet.

3.9 GROUNDING AND BONDING

A. Provide separate insulated ground conductor in each raceway. Bond each end of conductor to conduit grounding bushing and extend to box or equipment grounding lug or bus.
B. Use grounding bushings on metallic conduit terminations.

3.10 DISCONNECT SWITCHES

A. Install 5'-0" above finished floor to centerline of disconnect handles in the "ON" position, unless otherwise noted.

3.11 PANELBOARDS

A. Install in accordance with NEMA PB 1.1 and manufacturer's instructions.
B. Install 6'-6" above finished floor to top of panelboard.
C. Provide typed circuit directory.

3.12 MOTOR CONTROL EQUIPMENT

A. Magnetic Motor Starters: Install 5'-0" above finished floor to centerline of enclosure.

END OF SECTION 16005

END OF DIVISION 16

SECTION 310000 - EARTHWORK

PART 1. GENERAL

1.1 RELATED DOCUMENTS

A. Drawings and general provisions of the Contract, including General Conditions and Division 1 Specification sections, apply to work of this section.

1.2 DESCRIPTION OF WORK

A. Extent of earthwork is indicated on drawings.

1. Preparation of subgrade for building slabs, walks, and pavements is included as part of this work.

2. Clearing, grubbing, and removal of obstructions.

3. Preparation of subgrade; Compacted fill under and around structures and paving areas; Excavation and backfilling; Trenching and backfilling for utility lines; Site grading.

B. Definition: "Excavation" consists of removal of material encountered to subgrade elevations indicated and subsequent disposal of materials removed.

1.3 QUALITY ASSURANCE

A. Codes and Standards: Perform earthwork and site grading work in compliance with the applicable codes and requirements of governing authorities having jurisdiction.

B. Testing and Inspection Service:

1. The Owner will employ a testing laboratory to perform soil testing and inspection service for quality control testing during earthwork operations. It is the full responsibility of the Contractor to conform to the recommendations as set forth in the report dated 03/21/17 prepared by Geo-Test, Inc. (Job No. 1-70209). It is also the full responsibility of the Owner to coordinate scheduling 15 days in advance of any anticipated excavation, grading, and placement of engineered fill with Architect and Owner employed testing agency.

1.4 SUBMITTALS

A. Test Reports-Excavating: Submit 2 copies of the following reports directly to Architect from testing services, with 1 copy to the Owner and amount of copies as required by the Contractor for his use:

1. Test reports on borrow material.
2. Verification of each footing subgrade.

3. Field density test reports.

4. One optimum moisture-maximum density curve for each type of soil encountered.

5. Bedding and trench backfill material including sieve analysis, PI determination, and the Proctor determination.

1.5 JOB CONDITIONS

A. Site Information: Data on indicated subsurface conditions are not intended as representations or warranties of accuracy or continuity between solid bearings. It is expressly understood that Owner will not be responsible for interpretations or conclusions drawn therefrom by Contractor. Data are made available for the convenience of the Contractor.

B. Additional test borings and other exploratory operations may be made by Contractor at no cost to Owner.

C. The locations of underground utility lines and obstructions shown on the drawings are approximate and based on the best information available. No utilities other than those shown on the drawings are anticipated in the area of construction. However, the Contractor shall obtain information relating to possible hidden lines from all Public and Private Utilities and take due care in his excavation operations.

D. Existing Utilities: Locate existing underground utilities in areas of work. If utilities are to remain in place, provide adequate means of support and protection during earthwork operations.

E. Should uncharted, or incorrectly charted, piping or other utilities be encountered during excavation, consult utility owner immediately for directions. Cooperate with Owner and utility companies in keeping respective services and facilities in operation. Repair damaged utilities to satisfaction of utility owner.

F. Do not interrupt existing utilities serving facilities occupied and used by Owner or others, during occupied hours, except when permitted in writing by Architect and then only after acceptable temporary utility services have been provided.

1. Provide minimum of 48-hour notice to Architect, and receive written notice to proceed before interrupting any utility.

G. Use of Explosives: The use of explosives is not permitted.

H. Protection of Persons and Property:

1. Barricade open excavations and post with warning lights as required for the safety of persons. Protect structures, utilities, sidewalks, pavements, and other facilities immediately adjacent to excavations from damages caused by settlement, lateral movement, undermining, washout and other hazards.

2. Take precautions and provide necessary bracing and shoring to guard against movement or settlement of existing improvements or new construction. Contractor is entirely responsible for strength and adequacy of bracing and shoring, and for safety and support of construction from damage or injury caused by lack thereof or by movement or settlement.

I. Sampling and Testing:

1. Soil Testing and Inspection Service: Engage an approved soil testing and inspection

service. Testing service will include soil survey for satisfactory soil materials, sampling, and testing soil materials proposed for use in the work, and field testing facilities for quality control testing during earthwork operations. Organization or individual who will perform testing and inspection service is subject to prior approval by the Architect.

2. Tests for Proposed Soil Materials: Test soil materials proposed for use in work, and submit test reports on same day tests are conducted to Architect and Contractor, for tests herein specified and for additional tests as may be required. Tests of fill materials and embankments will be made at the following suggested minimum rates: Provide one field density test for each 50 square yards of original ground surface prior to placing fill or constructing floor slabs. Provide one field density test for each 150 cubic yards of fill placed or each layer of fill for each work area, whichever is the greater number of tests. Provide one moisture-density curve for each type of material used, as indicated by sieve analysis and plasticity index. Determine maximum densities in accordance with ASTM D1557, of current issue. The testing service will determine the suitability of all materials to be used as fills.

3. Quality Control During Construction: Testing service must inspect and approve all subgrades, including bedrock, and fill layers before further construction work is performed thereon.

4. The Geotechnical Engineer or his representative shall perform field density tests with a frequency and at the locations he feels appropriate. The Geotechnical Engineer or his representative will perform Proctor tests on representative samples of all fill material. To minimize delays the Earthwork Contractor is encouraged to submit soil samples prior to use for proctor testing.

PART 2. PRODUCTS

2.1 EMBANKMENT

A. General: Embankments shall consist of a controlled fill constructed in areas indicated on the grading plans.

B. Materials:

1. Physical Characteristics: Embankment fill material shall consist of soils that conform to the following physical characteristics:

Seive Size (Square Openings)	Percent Passing by Weight
1-1/2 inch	100
No. 4	60-100
No. 200	20-45

The plasticity index of the material, as determined in accordance with ASTM D4318, shall not exceed 15. Results of the soil investigation indicate that most of the onsite soils will meet these requirements, however, some blending and imported fill may be required. The fill materials shall be free from roots, grass,

other vegetable matter, clay lumps, rocks larger than 2 inches, or other deleterious materials.

C. Unsatisfactory Material: Other than above.

D. If in the opinion of the Architect, based on reports of the testing service and inspection, the subgrade or fills which have been placed are below the specified density, the Architect will require additional compaction and testing at the expense of the Contractor.

2.2 CLEARING & GRUBBING

A. General: Clearing and grubbing will be required for all areas shown on the plans to be excavated or on which fill is to be constructed.

B. Clearing: Clearing shall consist of removal and disposal of trees and other vegetation, down timber, snags, brush, and rubbish within the areas to be cleared. Individual trees, groups of trees, or other vegetation not required to be removed shall be protected, insofar as practical, and left standing.

C. Grubbing: Stumps, matted roots, and roots larger than 2 inches in diameter shall be removed from within 6 inches of the surface of areas on which fills are to be constructed except in roadways. Materials described above within 18 inches of finished subgrade of roadways in either cut or fill sections shall be removed. Areas disturbed by grubbing will be filled as specified.

D. Grass & Topsoil: Grass, grass roots and incidental topsoil shall not be left beneath a fill area, nor shall this material be used as fill material. Grass, grass roots and topsoil may be stockpiled and later used in the top 6 inches of fills outside roadways and building pads.

PART 3. EXECUTION

3.1 EXCAVATION

A. Excavation consists of removal and disposal of all materials encountered to obtain the required elevations. Excavations shall be made to the proper depth, with allowances made for clearances to install services and forms. Cuts shall be accurately shaped to the cross-sections and grades indicated.

B. Classification of Materials:

1. Material to be excavated is unclassified. The Contractor shall visit the site and determine for himself the classification of materials to be removed.

2. Bottoms for footings shall be level, clean, and clear of loose materials.

3. Where walls or footings are authorized to be placed without forms, the sides of the excavations shall be sharp and true. Undercutting will not be permitted.

4. Over excavations shall be filled with specified concrete type.

5. Keep earth under footings dry and free from frost. Should bearing surfaces be softened by water or frost, re-excavate to solid bearing, re-compact soil and fill with concrete of required strength at Contractor's expense.

6. Excess material from excavations which is not required for fill or backfill shall be removed from the site and legally disposed off-site.

C. Stability of Sides:

1. Slope sides of excavations over 5' deep to angle of repose of material excavated; otherwise, shore and brace where sloping is not possible either because of space restrictions or stability of material excavated.

2. Maintain sides and slopes of excavation in a safe condition.

3. Take precautions to prevent slides or cave-ins when excavations are made in locations adjacent to backfilled excavations, and when sides of excavations are subjected to vibrations from vehicular traffic or the operation of machinery, or any other sources.

D. Shoring and Bracing:

1. Provide materials for shoring and bracing, such as sheet piling, up-rights, stringers and cross-braces, in good serviceable conditions.

2. Maintain shoring and bracing in excavations regardless of time period excavations will be open.

3. Provide minimum requirements for trench shoring and bracing to comply with ANSI A10.1 "Safety Code for Building Construction", and with local codes and authorities having jurisdiction.

4. All shoring and sheeting required to perform excavation and to protect and safeguard employees of adjacent structures shall be installed.

5. Initial design of any shoring system for this project is the responsibility of prospective shoring contractors. These designs shall be based on experience with shoring system installation, subsurface information included in soils report, and available knowledge of local conditions.

E. Unauthorized Excavation:

1. Unauthorized excavation consists of removal of the material indicated below elevations without specific direction of the Architect. Replace unauthorized excavation as herein specified. Excavations for footing carried below elevations indicated on drawings shall be filled with specified footing type concrete at Contractor's expense. Excavations carried below the grades indicated for trenches shall be backfilled with suitable earth, sand, or fine gravel at Contractor's expense.

F. Dewatering:

1. Perform earthwork and site grading in a manner to prevent surface water and subsurface or ground water from flowing into excavations, and to prevent water from flooding the project site and surrounding area.

2. Do not allow water to accumulate in excavations. Remove all water from excavations using dewatering methods which will prevent softening of foundations

bottoms, undercutting footings, and soil changes detrimental to stability of the subgrades and foundations. Provide and maintain pumps, sumps, suction and discharge lines, and other dewatering components necessary to convey water away from the site.

3. In no case shall "water settling" or jetting be employed. Where vibratory compaction equipment is used, it shall be Contractor's responsibility to insure that vibrations do not damage nearby buildings or other adjacent property.

4. Convey water removed from excavations and rain water to collecting or runoff areas. Provide and maintain temporary drainage ditches and other diversions. Do not use trench excavations for site utilities as temporary drainage ditches.

G. Material Storage:

1. Stockpile excavated materials classified as satisfactory soil material where directed, until required for fill; place, grade and shape stockpiles for proper drainage.

H. Excavation for Structures:

1. The building area and paved areas shall be over excavated to such an extent so as to provide a minimum of 4.0 feet of structural fill beneath all foundations and 1.0 foot of structural fill beneath all floor slabs and pavements. Overexcavation shall extend laterally a minimum distance of 3.0 feet beyond the footing perimeters. The existing subgrade soils shall be scarified to a minimum depth of 8 inches and watered as necessary to bring upper 1.0 foot to the optimum moisture content or above, and compacted to the requirements of Section 3.2 C.5.

2. Conform to elevations and dimensions shown within a tolerance of plus or minus 0.50" and extending a sufficient distance from footings and foundations to permit placing and removal of concrete formwork, installation of services, and for other construction required, and for inspection.

3. In excavating for footings and foundations, take care not to disturb bottom of excavation. Excavate by hand to final grade just before concrete is placed. Trim bottoms to required lines and grades to leave solid base to receive concrete.

I. Excavation for Trenches:

1. Excavating shall be performed to remove whatever substances are encountered. All excavating shall be made by open cut.

2. Sides of trenches shall be kept as nearly vertical as practical considering safety requirements.

3. The bottoms of trenches shall not be less than 12 inches wide nor more than 16 inches wider than the outside diameter of the pipes or conduits to be laid therein and accurately graded for the entire length of pipe or conduit.

4. Whenever unstable or unsuitable materials, as determined by the Architect, are encountered, they shall be removed to a depth required and wasted as directed by the Architect.

5. Cuts through concrete and asphalt shall be made with a concrete saw, replace to match existing.

6. Excavated materials shall be stacked a sufficient distance back from edge of trenches to prevent slides or cave-ins.

7. All Shoring and sheeting required to perform the excavation and to protect and safeguard the employees or adjacent structures shall be installed.

J. Foundation, slab and Pavement Subgrade Preparation:

1. Prior to placing reinforcement, footings, slabs, or pavement, the supporting soils shall be prepared, moisture conditioned, and compacted as described herein.

3.2 COMPACTION

A. General:

1. Perform the compaction of soil materials using suitable soil compaction equipment for the materials to be compacted and the work area locations.

2. Control soil compaction during construction for compliance with percentage of maximum density specified for each area classification.

3. Prior to placement of fill, the building and paved areas shall be inspected and approved by a representative of the geotechnical engineer to insure satisfactory removal of native soils and the removal of any existing manmade fill. The exposed cut surface, as well as surfaces to receive fill, shall be scarified to a minimum depth of 8 inches and watered as necessary to bring the upper 12 inches as close as practicable to optimum moisture content or above. The upper 12 inches of the native soils shall then be compacted to a minimum of 95 percent of maximum dry density as determined in accordance with ASTM D1557.

4. Provide compaction equipment of suitable size and number, and in satisfactory working condition to complete the work on schedule and to obtain the required density throughout the entire area being compacted. Use compaction equipment which does not cause damage or settlement to existing structures, utilities or other construction. Where vibratory compaction equipment is used, it shall be the Contractor's responsibility to insure that the vibrations do not damage nearby buildings or other adjacent property.

B. Percentage of Maximum Density Requirement:

1. Provide not less than the following percentages of the maximum density of the same soil material compacted at optimum moisture content, for the actual density of each layer of soil material-in-place.

2. Structural fill shall be mechanically compacted to the following:

Minimum Compaction
ASTM D-1557

Foundation Support	95%
Slab Support	95%
Below Slab Utility Trenches	95%
General Site Grading	90%
Pavement Support:	
Upper 12" of Subgrade	95%
All other fill below pavement	90%

3. Aggregate Base Course shall be compacted to a minimum of 96% of maximum density as determined by ASTM D-1557.

4. Asphaltic concrete shall be compacted to a minimum of 95% of maximum Marshall Density (75 blows).

5. Compaction by flooding and jetting is specifically prohibited unless authorized in advance by the Owner or his representative and the Geotechnical Engineer.

6. Required Degree of Compaction: Maximum density and optimum moisture content of engineered fill shall be determined in accordance with ASTM D1557. Moisture at time of compaction shall be 2% below optimum moisture or higher. For purposes of acceptance, in-place density of fill shall be defined as that determined by sand cone method (ASTM D1557) or by nuclear methods (ASTM D2922).

C. Moisture Control:

1. Provide equipment capable of adding measured amounts of moisture to the soil material as determined by moisture density relation tests. Maintain the actual moisture content in the soil material at the time of compaction between 2 percent below optimum moisture and higher.

2. Where the subgrade or layer of soil material must be moisture conditioned before compaction, uniformly apply the required amount of water to the surface of subgrade, or layer of soil material, in such a manner as to prevent free water appearing on the surface during or subsequent to compaction operations.

3. Remove and replace, or scarify and air dry, soil material that is too wet to permit compaction to specified percentage of maximum density.

4. Soil material that has been removed because it is too wet to permit compaction may be stockpiled or spread on the surface where directed by the Architect and permitted to dry. Assist drying by discing, harrowing or pulverizing, until the moisture content is reduced to a satisfactory value, as determined by moisture density relation tests. When accepted by the Architect, the soil material may be used in compacted backfill or fill.

5. All fill shall be spread in layers not exceeding 8 inches, watered as necessary, and compacted. Moisture content at the time of compaction shall be 2 percent below optimum moisture or higher. A density of not less than 95 percent of maximum dry density within the building pad and paved areas shall be obtained for the structural fill. Structural fill as well as the native soils, outside the building pad and

paved areas shall be compacted to 90 percent of maximum dry density. All fill within building pad, including footing, stem wall, and utility line backfill, shall also be compacted to at least 95 percent of maximum dry density. Optimum moisture content and maximum dry density for each soil type used shall be determined in accordance with ASTM D1557.

6. Controlled fill shall not be constructed when the atmospheric temperature is below 35 degrees F. When the temperature falls below 35 degrees, it shall be the responsibility of the Contractor to protect all areas of completed work against any detrimental effects of ground freezing by methods approved by the geotechnical engineer. Any areas that are damaged by freezing shall be reconditioned, re-shaped, and compacted by the Contractor in conformance with the requirements of this specification without additional cost to the Owner.

3.3 BACKFILL AND FILL

A. General:

1. Backfill consists of the placement of specified backfill material in layers, in the excavations to the required subgrade elevations, for each area classification listed below.

2. Fill consists of the placement of specified fill materials, in layers, over the ground surface to the required elevations for each area classification.

B. Site Preparation - Fill Areas:

1. Prior to placing structural fill the areas to be filled shall be scarified to a depth of eight inches and the upper 12 inches shall be moisture conditioned as described below. The area to be filled shall then be compacted to a minimum of 95 percent of maximum density as determined by ASTM D-1557.

C. Site Preparation - Cut Areas:

1. Following excavation to rough grade all building and pavement areas shall be scarified to a depth of eight inches and the upper 12 inches shall be moisture conditioned as described below. All building and paved areas shall be compacted to a minimum of 95 percent of maximum density as determined by ASTM D-1557.

D. Backfill and Fill Materials:

1. Fill Material:
Fill material shall be non-expansive soil which may be gravel, sand, or a combination thereof. Fill material shall exhibit a plasticity index of twelve or less. No organic or decomposable material shall be utilized. Material larger than six inches shall not be placed in the fill without prior approval of the Owner or his representative and the Geotechnical Engineer. Material larger than four inches shall not be placed within twelve inches of footings or slabs. All fill material shall be approved by the Geotechnical Engineer.

2. Fill Placement:
Fill material shall be blended as necessary to produce a homogeneous material, then spread in horizontal lifts no greater than 8” in uncompacted thickness but in no case thicker than can be properly compacted with the equipment to be utilized. If fill is to be placed on slopes steeper than 5:1 (horizontal:vertical) the natural

ground shall be benched with minimum three foot wide benches at maximum two-foot vertical intervals.

3. Moisture Conditioning:
Fill material shall be dried or moistened as necessary, prior to compacting, and shall be 2% below optimum moisture content or higher as determined by ASTM D-1557. Moisture shall be distributed uniformly throughout each lift.

E. Slope Protection & Drainage:
1. The edges of the controlled fill embankments shall be graded to the contours shown on the drawings and compacted to the density required in paragraph (3) above. Slopes steeper than 1 vertical to 3 horizontal shall be protected from erosion.

F. Utility Trenches:
1. The trenches shall not be backfilled until the utility systems, as installed, conform to the requirements specified and all required tests are performed.

2. Fill material shall be placed in 6" layers until the utility line has a cover of not less than 1'. Each layer shall be thoroughly and carefully tamped. The remainder of the backfill shall be moistened, placed in the trench in 8" layers, and thoroughly tamped or settled.

3. Material used for pipe bedding and initial backfill shall have 100% passing the 1” screen, 40-100% passing the No. 4 screen, and up to 35% passing the No. 200 screen.

4. Open trenches under driveways, sidewalks and streets shall be backfilled as specified above, except that additional care shall be taken to tamp the fill to a density equal to that required by these specifications. If excessive settlement occurs within the guarantee period of this contract, the Contractor shall return, remove all materials to the bottom of the excavation and recompact it to meet the specification.

5. Concrete shall be replaced immediately after backfilling is completed.

G. Pavement Base Course:
1. General:
a. Subbase course consists of placement of subbase material, in layers of specified thickness, over ground surface to support a pavement base course.

2. a. Provide subbase material consisting of naturally or artificially graded mixture or natural or crushed gravel, crushed stone, crushed slag, natural or crushed sand that will readily compact to the required density and complying with AASHO M147, Grade A.

3. Grade Control:
a. During construction, maintain lines and grades including crown and cross slope of subbase course.

4. Shoulders:
   a. Place shoulders along edges of subbase course to prevent lateral movement. Construct shoulders or acceptable soil materials, placed in such quantity to compact to thickness of each subbase course layer. Compact and roll at least a 12" width of shoulder simultaneously with compacting and rolling of each layer of subbase course.

5. Placing:
   a. Place subbase course material on prepared subgrade in layers of uniform thickness, conforming to indicated cross section and thickness. Maintain optimum moisture content for compacting subbase material during placement operations.

   b. When a compacted subbase course is shown to be 6" thick or less, place material in a single layer. When shown to be more than 6" thick, place material in equal layers, except no single layer more than 6" or less than 3" in thickness when compacted.

H. Borrow: When the quantity of suitable material required for embankments is not available within the limits of the job site, the contractor shall provide sufficient materials to construct the embankments to the lines, elevations and cross sections as shown on the drawings from borrow areas. The contractor shall obtain from owners of said borrow areas the right to excavate material, shall pay all royalties and other charges involved, and shall pay all expenses in developing the source including the cost of right-of-way required for hauling the material.

3.4 GRADING AND DRAINAGE

A. General: Uniformly grade all areas within the limits of site. Smooth finished surface and compact, with uniform levels or slopes between points where elevations are shown. Surfaces shall drain away from buildings and minor surfaces shall be finished. Finish shall be that ordinarily obtainable from either blade grader or hand shovel and rake operations.

B. Grading Surface of Fill Under Building Slabs:
   1. Grade smooth and even, free of voids, compacted as specified, and to required elevation. Provide final grades within a tolerance of 1/4" when tested with a 10' straightedge.

C. Ditches:
   1. Finish ditches to ensure thorough drainage of the subgrade surfaces at all times. Conduct final rolling operations to produce a hard, uniform and smooth cross-section.

D. Grassed Areas:
   1. Finish areas to receive grass or sod to within not more than 0.10' above or below the required subgrade elevations, compacted as specified, and free from irregular surface changes. The degree of finish for grassed areas shall be that ordinarily obtainable from a hand shovel and rake operation.

E. Walks and Driveways:

1. Shape the surface of areas under walks and drives to line, grade and cross section, with the finish surface not more than 0.00' above or 0.10' below the required subgrade elevation, compacted as specified, and graded to prevent ponding of water after rain.

F. Pavements for Streets and Roads:

1. Shape the surface of the areas under pavement to line, grade and cross section, with the finish surface not more than 1/2" above or below the required subgrade elevation, compacted as specified, and graded to prevent ponding of water after rains. Include such operations as plowing, discing, and any moisture of aerating required to provide the optimum moisture content for compaction.

2. Fill low areas resulting from removal of unsatisfactory soil materials, obstructions, and other deleterious materials, using satisfactory soil material. Shape to line, grade, and cross section as shown on the drawings.

G. Structures and Buildings:

1. All areas shall be shaped to drain away from structures and buildings.

3.5 MAINTENANCE

A. Protection of Graded Areas:

1. Protect newly graded areas from traffic and erosion, and keep free of trash and debris.

2. Repair and re-establish grades in settled, eroded, and rutted areas to the specified tolerances.

B. Reconditioning Compacted Areas:

1. When completed compacted areas are disturbed by subsequent construction operations or adverse weather, scarify the surface, reshape and compact to the required density prior to further construction. Use hand tamping for recompaction over underground utilities, if any.

C. Settling:

1. Where settling is measurable or observable at excavated areas during general project warranty period, remove surface (pavement, lawn or other finish) and backfill material, compact, and replace surface treatment. Restore appearance, quality, and condition or surface or finish to match adjacent work, and eliminate evidence of restoration to greatest extent possible.

3.6 DISPOSAL OF EXCESS AND WASTE MATERIALS

A. Disposal:

1. Remove waste materials, including excavated material classified as unsatisfactory soil material, trash, and debris from Owner's property and dispose of legally offsite.

END OF SECTION 31 00 00

SECTION 31 10 00 - SITE PREPARATION

PART 1 – GENERAL

1.1 RELATED DOCUMENTS

A. Drawing and general provisions of the Contract, including General and Supplementary Conditions and Division 01 Specification Sections, apply to this Section.

1.2 WORK DESCRIBED ELSEWHERE

A. Division 31 Section "Earthwork"

1.2 WORK INCLUDED

A. Extent of site clearing is shown on the drawings, and as required for new construction.

B. Site preparation includes but is not limited to the following.

1. Protection of existing trees and vegetation.
2. Removal of trees and other vegetation.
3. Topsoil stripping.
4. Clearing and grubbing.
5. Protection of existing above- and below-grade improvements
6. Removal of existing above-& below-grade improvements.

1.3 PROJECT CONDITIONS

A. Traffic: Conduct site-clearing operations to ensure minimum interference with roads, streets, walks and other adjacent occupied or used facilities. Do not close or obstruct streets, walks, or other occupied or used facilities without permission from the Owner's representative.

B. Protection of Existing Improvements.

1. Provide protection necessary to prevent damage to the existing improvements indicated to remain in place.
2. Protect improvements in areas adjoining the construction site and on Owner's property.
3. Restore damaged improvements to their original condition, as acceptable to parties having jurisdiction.

C. Salvable Improvements: The Owner shall have first right to all salvaged materials. Carefully remove items indicated to be salvaged and store on Owner's premises where indicated.

D. Existing Services:

1. General: Indicated locations are approximate; determine exact locations before commencing Work.

a. Take all necessary precautions to protect existing Site Utilities, including handwork for excavation and compaction work.

b. Compliance shall be required with **Chapter 62, Article 14 NMSA 1978**, of the New Mexico State Code regarding the location, excavation. and protection of utilities. Responsibilities for location of existing utilities, their protection, and repair of damaged utilities shall be assigned in accordance with Chapter 62, Article 14 NMSA 1978. The

New Mexico One Call number for request for location of utilities is 1-800-321-2357.

2. Arrange and pay for disconnecting, removing, capping, and plugging utility services. Notify Utility Company in advance and obtain approval before starting this Work.

3. Place markers to indicate location of disconnected services. Identify service lines and capping locations on Project Record Documents.

PART 2 - PRODUCTS (Not Applicable)

PART 3 - EXECUTION

3.1 SITE CLEARING

A. General

1. Remove trees, shrubs, grass, bark mulch, and other vegetation, improvements, gravel, rocks, paving, or obstructions interfering with installation of new construction. Remove such items from elsewhere on the site or premises as specifically indicated, if not indicated, as required to execute the work and comply with all applicable regulations. Removal includes digging out stumps and roots.
2. Dispose of materials off site in a legal manner
3. Minimize dust due to clearing operations; do not use water if that will result in flooding, sedimentation of public waterways or storm sewers, or other pollution.

B. Topsoil

1. Topsoil is defined as friable clay loam surface soil found in a depth of not less than 4". Satisfactory topsoil is reasonably free of subsoil, clay lumps, stones, and other objects over 2" in diameter, and without weeds, roots, and other objectionable material.

2. Strip topsoil to whatever depths encountered in a manner to prevent intermingling with underlying subsoil or other objectionable material.

3. Remove heavy growths of grass from areas before stripping. Where trees are indicated to be left standing, stop topsoil stripping a sufficient distance to prevent damage to main root system.

4. Stockpile topsoil in storage piles in areas shown or where directed. Construct storage piles to freely drain surface water. Cover storage pile if required to prevent wind-blown dust.

5. Dispose of unsuitable or excess topsoil as specified for disposal of waste material.

C. Clearing and Grubbing

1. Clear site of trees, shrubs, and other vegetation, except for those indicated to be left standing.

2. Completely remove stumps, roots, and other debris protruding through ground surface. Stumps, matted roots, and roots larger than 2" in diameter shall be removed from within 6" of surface of areas on which fills are to be constructed. Any stumps, roots, etc., within the new building footprints must be removed completely. Any soils loosened by removal of stumps, roots, etc., shall be replaced, filled, and compacted as specified in Section 31 00 00

"Earthwork". Use only hand methods for grubbing inside the drip line of trees indicated to be left standing.

3. Fill depressions caused by clearing and grubbing operations with satisfactory soil material, unless further excavation of earthwork is indicated. Place fill material in horizontal layers not exceeding 6" loose depth, and thoroughly compact to a density equal to adjacent original ground (90% proctor at landscape areas, 95% at all others).

D. Removal of Improvements

1. Remove above-grade and below-grade improvement necessary to permit construction and other work as indicated.
2. Abandonment or removal of certain underground pipe or conduits may be shown on mechanical or electrical drawings and is included under work of those sections. Removal of all abandoned underground piping or conduit interfering with construction is included under this section.

3.2 DISPOSAL OF WASTE MATERIALS

A. Burning on Owner's Property: Burning is not permitted on the Owner's property.

B. Removal from Owner's Property: Remove waste materials and unsuitable or excess soil from Owner's property and dispose of legally off site.

END OF SECTION

SECTION 32 12 16 - ASPHALT PAVING

PART 1 GENERAL

1.1 WORK INCLUDED

A. Furnish and install asphaltic concrete paving and base course as shown on the drawings, as specified herein, and as needed for a complete and proper installation.

1.2 RELATED WORK SPECIFIED ELSEWHERE

A. Section 310000 - Earthwork

B. Section 321313 - Portland Cement Concrete Paving

C. Section 321723 - Roadway and Paving markings

1.3 REFERENCES

A. ASTM D1559 - Resistance to Plastic Flow

B. ASTM D946 - Penetration-Graded Asphalt Cement for Use in Pavement Construction.

C. New Mexico Department of Transportation (NMDOT) Standard Specification for Road and Bridge Construction, latest edition.

D. The Asphalt Institute - Manual MS-4 - The Asphalt Handbook.

E. AASHTO T180, T 224, and T310.

1.4 QUALITY ASSURANCE

A. Perform work in accordance with State of New Mexico Department of Transportation Standards for Road & Bridge Construction, Section 423, latest edition.

B. Mixing Plant: Conform to NMDOT Standard Specifications for Road & Bridge Construction, Section 423, latest edition. Provide a mix design approved by the NMDOT which has been reviewed, signed, and sealed by a professional engineer licensed in the State of New Mexico.

C. Obtain materials from same source throughout.

1.5 REGULATORY REQUIREMENTS

A. Conform to applicable codes for paving work on public property.

1.6 ENVIRONMENTAL REQUIREMENTS

A. Do not place asphalt on wet or frozen surfaces or if weather conditions prevent proper handling, finishing, and compaction. Place Hot Mix Asphalt when the Chill Factor is at

least 40 degrees F and rising. If the air temperature is 60 degrees F or warmer, do not consider the Chill Factor.

Wind Chill Factor (F) = 35.74 + 0.6125T – 35.75(V*0.16) + .4275T(V*0.16)
(Where V = wind speed in miles/hour and T = air temperature in degrees F)

1.7 SUBMITTALS

A. As specified in the General Conditions and pertinent provisions of Section 01340.

B. Submit an NMDOT-approved Hot Mix Asphal Mix Design reviewed, signed, and sealed by a NM licensed professional engineer for review prior to commencement of work.

PART 2 PRODUCTS

2.1 MATERIALS

A. Asphalt Cement: ASTM D946.

B. Aggregate for Wearing Course Mix:
1. NMDOT Standards for Road & Bridge Construction, Section 423, Type II requirements, Class B Sieve Analysis.

2.2 ASPHALT PAVING MIX

A. Use dry material to avoid foaming. Mix uniformly.

B. Wearing Course: 6.0 percent of asphalt cement by weight with 85-100 percent penetration in mixture in accordance with NMDOT Specification 423 for SP III or SP IV, Class B sieve analysis. Minimum stability shall be 1800 pounds. Stability & flow shall be determined in accordance with ASTM D1559.

PART 3EXECUTION

3.1 EXAMINATION

A. Verify base conditions under provisions of Section 01400.

B. Verify that compacted subgrade is dry and ready to support paving and imposed loads.

C. Verify gradients and elevations of base are correct.

3.2 SUBGRADE AND BASE COURSE

A. Compact upper 12" of subgrade to 95% of maximum density. Maximum dry density of all soil types encountered or used shall be determined in accordance with AASHTO T 180 (Modified Proctor), Method D (TTCP Modified) and AASHTO T 224. Nuclear densometer testing methods shall be used to determine in-place densities in accordance with AASHTO T 310 and TTCP procedures. Ensure the soil moisture content (at the time of compaction) is from optimum to optimum minus five percent (-5%). For soils with a PI greater than 14,

ensure the moisture content of the soil (at the time of compaction), is from optimum moisture to optimum moisture plus four percent (+4%).

B. Contractor must mix aggregate base course material to a homogenous mixture. Do not place on frozen subgrade. Compact entire thickness of aggregate base course to minimum 96% of maximum density as determined by AASHTO T 180 (Modified Proctor), Method D (TTCP Modified). Nuclear densometer testing methods shall be used to determine in-place densities in accordance with AASHTO T 310 and TTCP procedures.

3.3 PLACING ASPHALT PAVEMENT - WEARING COURSE

A. Place to thickness identified in schedule at end of this Section.

B. Compact pavement thoroughly and uniformly immediately after placement by rolling to a minimum density of 93.5%. Operate rollers at speeds slow enough to minimize displacement of the Hot Mix Asphalt, including the lines and grades of the asphalt edges. Remove marks from pneumatic rollers and immediately correct any displacement. Smooth the surface of each completed course and prevent deviations as listed below in Tolerances. Hand compact in areas inaccessible to rolling equipment.

C. Develop rolling with consecutive passes to achieve even and smooth finish, without roller marks.

3.4 TOLERANCES

A. Flatness: Maximum variation of 1/8 inch measured with 10-foot straight edge.

B. Scheduled Compacted Thickness: Within 1/4 inch.

C. Variation from True Elevation: Within 1/2 inch.

3.5 FIELD QUALITY CONTROL

A. Field inspection and testing will be performed under provisions of Section 01400.

B. Samples shall be taken from the asphalt plant and/or laydown surface for testing for each 500 tons or less placed each day. Notify testing representative 48 hours prior to placement of any materials and for required testing of paving subgrade for compaction.

3.6 PROTECTION

A. Immediately after placement, protect pavement from mechanical injury until mixture has cooled and attained its maximum degree of hardness.

3.7 SCHEDULES

A. Pavement shall be placed a total of 3” thickness over 6” aggregate base course on 12” compacted subgrade.

END OF SECTION 32 12 16

SECTION 32 13 13 - CONCRETE PAVING

PART 1 GENERAL

1.1 WORK INCLUDED: Furnish and install Portland cement concrete paving as shown on the drawings, as specified herein, and as needed for a complete and proper installation.

1.2 RELATED WORK SPECIFIED ELSEWHERE

A. Section 310000-Earthwork.

1.3 REFERENCES

A. ACI 301 - Specifications for Structural Concrete for Buildings.

B. ACI 304 - Recommended Practice for Measuring, Mixing, Transporting and Placing Concrete.

C. ANSI/ASTM A185 - Welded Steel Wire Fabric for Concrete Reinforcement.

D. ANSI/ASTM D1751 - Preformed Expansion Joint Fillers for Concrete Paving and Structural Construction.

E. ASTM C33 - Concrete Aggregates.

F. ASTM C94 - Ready Mix Concrete.

G. ASTM C150 - Portland Cement

H. ASTM C260 - Air Entraining Admixtures for Concrete.

1.4 QUALITY ASSURANCE

A. Perform work in accordance with ACI 301.

B. Obtain cementitious materials from same source throughout.

1.5 SUBMITTALS

A. Submit an NMDOT approved concrete mix design and as specified in the General Conditions and provisions of Section 01300.

1.6 REGULATORY REQUIREMENTS

A. Conform to applicable standards for paving work on public property.

1.7 ENVIRONMENTAL REQUIREMENTS: Do not place concrete when base surface temperature is less than 40 degrees F, or surface is wet or frozen, unless appropriate admixtures have been previously approved.

PART 2 PRODUCTS

2.1 FORM MATERIALS

A. Form Materials: Conform to ACI 301.

2.2 REINFORCEMENT

A. Reinforcing Steel and Wire Fabric: Type specified in Section 03200.

2.3 CONCRETE MATERIALS

A. Concrete Materials: As specified in Section 03300.

2.4 CONCRETE MIX

A. Mix concrete according to ACI 304. Deliver concrete according to ASTM C94.

B. Select proportions for normal weight concrete according to ACI 301 Method 1.

C. Provide concrete to the following criteria:
1. Compressive Strength: 4000 psi @ 28 days.
2. Slump: 3 to 5 inches.
3. Maximum Aggregate Size: 1 inch.
4. Air Content Range: 4.5 to 7.5 percent.
5. Minimum Cement Content: 520 lb./cu. yd. of concrete.
6. Assure the expansion of the concrete mix design does not exceed .1% in accordance with ASTM C1293.

D. Use accelerating admixtures in cold weather only when approved by Architect/Engineer. Use of admixtures will not relax cold weather placement requirements.

E. Use calcium chloride only when approved by Architect/Engineer.

F. Use set retarding admixtures during hot weather only when approved by Architect.

2.5 SOURCE QUALITY CONTROL

A. Provide mix design under provisions of Section 01300.

B. Submit an NMDOT approved concrete mix design of each class of concrete to Architect for review prior to commencement of work.

C. Test samples in accordance with ACI 301.

PART 3 EXECUTION

3.1 EXAMINATION

A. Verify compacted subgrade is acceptable and ready to support paving and imposed loads.

B. Verify gradients and elevations of base are correct.

3.2 PREPARATION

A. Moisten subgrade to minimize absorption of water from fresh concrete.

B. Coat surfaces of manhole and catch basin frames with oil to prevent bond with concrete pavement.

C. Notify Architect minimum 24 hours prior to commencement of concreting operations.

3.3 FORMING

A. Place and secure forms to correct location, dimension, and profile.

B. Build formwork to permit easy stripping and dismantling without damaging concrete.

C. Place joint filler vertical in position, in straight lines. Secure to formwork during concrete placement.

3.4 REINFORCEMENT

A. Place reinforcement at mid-height of slabs-on-grade.

B. Interrupt reinforcement at expansion joints.

C. Place reinforcement to achieve pavement and curb alignment as detailed.

D. Provide dowelled joints 18 inches o.c. at interruptions of concrete with one end of dowel set in capped sleeve to allow longitudinal movement.

3.5 JOINTS

A. Place expansion joints at 24 foot intervals. Align curb, gutter, and sidewalk joints.

B. Place joint filler between paving components and building or other appurtenances. Recess top of filler 1/4 inch for sealant placement per Section 02550.

C. Provide scored control joints at 6 foot intervals along sidewalks, between sidewalks and curbs and between curbs and pavement, or as indicated on plans.

3.6 PLACING CONCRETE

A. Place concrete in accordance with ACI 301.

B. Place concrete continuously between predetermined construction joints. Do not break or interrupt successive pours such that cold joints occur.

C. Place concrete to pattern indicated. Score contraction joints 3/16 inch wide at an optimum time after finishing.

3.7 FINISHING

A. Area Paving: Medium broom.

B. Sidewalk Paving: Medium broom tooled ½" radius and trowel joint edges.

C. Curbs and Gutters: Medium broom.

D. Inclined Pedestrian Ramps: Heavy Broom perpendicular to slope.

3.8 FIELD QUALITY CONTROL

A. Field testing will be performed under provisions of Section 01410.

B. Notify testing representative 48 hours prior to placement of any materials and for required testing of paving sub-grade for compaction.

C. Three concrete test cylinders will be taken for every 75 or less cu yds of each class of concrete placed each day.

D. One additional test cylinder will be taken during cold weather and cured on site under same conditions as concrete it represents.

E. One slump test will be taken for each set of test cylinders taken.

F. Maintain records of placed concrete items. Record date, location of pour, quantity, air temperature, and test samples taken.

3.9 PROTECTION

A. Immediately after placement, protect pavement from premature drying, excessive hot or cold temperatures, and mechanical injury.

3.10 SCHEDULES

A. Concrete Sidewalks: 4,000 psi 28 day concrete, 4 inches thick, air entrained 4.5-7.5%, medium broom finish.

B. Heavy Duty Pavement and Curbs: 4,000 psi 28 day concrete, 6 inches thick with #4 rebar at 12" on center each way set 1-1/2 to 2" above bottom of concrete. Concrete pavement shall be placed over 4" aggregate base course compacted to minimum 96% density on 8" compacted subgrade.

C. Concrete refuse area slabs: 4,000 psi 28 day concrete, #4 rebar at 12" on center each way, 6" thick over 4" aggregate base course, medium broom finish.

END OF SECTION 32 13 13

SECTION 32 1723 - PAVEMENT MARKINGS

PART 1 - GENERAL

1.1 SUMMARY

A. Section includes painted markings applied to asphalt and concrete pavement.

1.2 PREINSTALLATION MEETINGS

A. Preinstallation Conference: Conduct conference at Project site.

1.3 ACTION SUBMITTALS

A. Product Data: For each type of product.

B. LEED Submittals:

1. Product Data interior, field-applied, pavement-marking paints, documentation including printed statement of VOC content.

C. Samples: For each exposed product and for each color and texture specified.

PART 2 - PRODUCTS

2.1 MANUFACTURERS

A. Manufacturers: Subject to compliance with requirements, available manufacturers offering products that may be incorporated into the Work include, but are not limited to the following:

1. Benjamin Moore & Co.
2. Dunn-Edwards Corporation.
3. Kwal Paint.
4. Sherwin-Williams Company (The).

2.2 PAVEMENT-MARKING PAINT

A. Pavement-Marking Paint: MPI #32, alkyd traffic-marking paint.

1. Color: As indicated.

B. Pavement-Marking Paint: MPI #97, latex traffic-marking paint.

1. Color: As indicated.

C. Glass Beads: AASHTO M 247, Type 1 made of 100 percent recycled glass.

D. VOC Content: Pavement markings used on building interior shall have a VOC content of 150 g/L or less.

PART 3 - EXECUTION

3.1 PAVEMENT MARKING

A. Do not apply pavement-marking paint until layout, colors, and placement have been verified with Architect.

B. Allow paving to age for a minimum of 30 days before starting pavement marking.

C. Sweep and clean surface to eliminate loose material and dust.

D. Apply paint with mechanical equipment to produce pavement markings, of dimensions indicated, with uniform, straight edges. Apply at manufacturer's recommended rates to provide a minimum wet film thickness of 15 mils.

1. Apply graphic symbols and lettering with paint-resistant, die-cut stencils. Apply paint so that it cannot run beneath the stencil.

2. Broadcast glass beads uniformly into wet markings where required at a rate of 6 lb/gal.

END OF SECTION 32 1723

SECTION 333000 – SANITARY SEWER

PART 1. GENERAL

1.1 RELATED DOCUMENTS

A. Drawings and general provisions of the Contract, including General Conditions and Division 1 Specification sections, apply to work of this section.

1.2 SUMMARY

A. This Section includes sanitary sewerage outside the building.

B. Related Sections include the following:

1. Division 3 Section "Cast-in-Place Concrete" for concrete structures.

1.3 DEFINITIONS

A. PVC: Polyvinyl chloride plastic.

1.4 PERFORMANCE REQUIREMENTS

A. Gravity-Flow Nonpressure-Piping Pressure Ratings: At least equal to system test pressure.

1.5 SUBMITTALS

A. Product Data: For the following:

1. Sewer pipe, fittings, and cleanouts.

B. Coordination Drawings: Show manholes and other structures, pipe sizes, locations, and elevations. Include details of underground structures and connections. Show other piping in same trench and clearances from sewerage system piping. Indicate interface and spatial relationship between piping and proximate structures.

C. Field Test Reports: Indicate and interpret test results for compliance with performance requirements.

1.6 DELIVERY, STORAGE, AND HANDLING

A. Do not store plastic structures, pipe, and fittings in direct sunlight.

B. Protect pipe, pipe fittings, and seals from dirt and damage.

C. Handle precast concrete manholes and other structures according to manufacturer's written rigging instructions.

1.7 PROJECT CONDITIONS

A. Site Information: Perform site survey, research public utility records, and verify existing utility locations.

B. Locate existing structures and piping to be closed and abandoned.

C. Existing Utilities: Do not interrupt utilities serving facilities occupied by Owner or others unless permitted under the following conditions and then only after arranging to provide temporary utility services according to requirements indicated:

1. Notify Architect not less than 2 days in advance of proposed utility interruptions.

2. Do not proceed with utility interruptions without Architect's written permission.

PART 2. PRODUCTS

2.1 MANUFACTURERS

A. Available Manufacturers: Subject to compliance with requirements, manufacturers offering products that may be incorporated into the Work include, but are not limited to, the following:

1. PVC Backwater Valves and Cleanouts:
   a. Canplas, Inc.
   b. IPS Corp.
   c. NDS, Inc.

2.2 PIPING MATERIALS

A. Refer to Part 3 "Piping Applications" Article for applications of pipe and fitting materials.

2.3 PIPES AND FITTINGS

A. PVC Sewer Pipe and Fittings: According to the following:

1. PVC Sewer Pipe and Fittings, NPS 15 (DN375) and Smaller: ASTM D 3034, SDR 35, for solvent-cemented or gasketed joints.
   a. Gaskets: ASTM F 477, elastomeric seals.

B. PVC Profile Gravity Sewer Pipe and Fittings: ASTM F 794, open and closed profile, bell and spigot for gasketed joints.

1. Gaskets: ASTM F 477, elastomeric seals.

2.4 SPECIAL PIPE COUPLINGS AND FITTINGS

A. Sleeve-Type Pipe Couplings: ASTM C 1173, rubber or elastomeric sleeve and band assembly fabricated to mate with OD of pipes to be joined, for nonpressure joints.

1. Sleeve Material for Plastic Pipe: ASTM F 477, elastomeric seal.

B. Bushing-Type Pipe Couplings: ASTM C 1173, rubber or elastomeric bushing fabricated to mate with OD of smaller pipe and ID of adjoining larger pipe, for non-pressure joints.

1. Material for Plastic Pipe: ASTM F 477, elastomeric seal.

2.5 PE FILM, PIPE ENCASEMENT

A. ASTM A 674 or AWWA C105; PE film, tube, or sheet; 8-mil (0.2-mm) thickness.

2.6 CONCRETE

A. General: Cast-in-place concrete according to ACI 318, ACI 350R, and the following:
1. Cement: ASTM C 150, Type II.

2. Fine Aggregate: ASTM C 33, sand.

3. Coarse Aggregate: ASTM C 33, crushed gravel.

4. Water: Potable.

B. Ballast and Pipe Supports: Portland cement design mix, 3000 psi (20.7 MPa) minimum, with 0.58 maximum water-cementitious materials ratio.
1. Reinforcement Fabric: ASTM A 185, steel, welded wire fabric, plain.

2.7 CLEANOUTS

A. PVC Cleanouts: PVC body with PVC threaded countersunk plug. Include PVC sewer pipe fitting and riser to cleanout of same material as sewer piping.

PART 3. EXECUTION

3.1 EARTHWORK

A. Excavating, trenching, and backfilling are specified in Section 310000 "Earthwork."

3.2 IDENTIFICATION

A. Materials and their installation are specified in Division 2 Section "Earthwork." Arrange for installing green warning tapes directly over piping and at outside edges of underground structures.
1. Use detectable warning tape over nonferrous piping and over edges of underground structures.

3.3 PIPING APPLICATIONS

A. General: Include watertight joints.

B. Refer to Part 2 of this Section for detailed specifications for pipe and fitting products listed below. Use pipe, fittings, and joining methods according to applications indicated.

C. Gravity-Flow Piping: Use the following:
1. NPS 4 and NPS 6 (DN100 and DN150): PVC sewer pipe and fittings, solvent-cemented joints or gaskets and gasketed joints..

3.4 SPECIAL PIPE COUPLING AND FITTING APPLICATIONS

A. Special Pipe Couplings: Use where required to join piping and no other appropriate method is specified. Do not use instead of specified joining methods.
1. Use the following pipe couplings for nonpressure applications:

a. Sleeve type to join piping, of same size, or with small difference in OD.

b. Bushing type to join piping of different sizes where annular space between smaller piping's OD and larger piping's ID permits installation.

B. Special Pipe Fittings: Use where indicated. Include PE film, pipe encasement.

3.5 INSTALLATION, GENERAL

A. General Locations and Arrangements: Drawing plans and details indicate general location and arrangement of underground sanitary sewerage piping. Location and arrangement of piping layout take design considerations into account. Install piping as indicated, to extent practical.

B. Install piping beginning at low point, true to grades and alignment indicated with unbroken continuity of invert. Place bell ends of piping facing upstream. Install gaskets, seals, sleeves, and couplings according to manufacturer's written instructions for using lubricants, cements, and other installation requirements. Maintain swab or drag in line, and pull past each joint as it is completed.

C. Use manholes for changes in direction, unless fittings are indicated. Use fittings for branch connections, unless direct tap into existing sewer is indicated.

D. Use proper size increasers, reducers, and couplings where different sizes or materials of pipes and fittings are connected. Reducing size of piping in direction of flow is prohibited.

E. Install gravity-flow piping and connect to building's sanitary drains, of sizes and in locations indicated. Terminate piping as indicated.

1. Install piping pitched down in direction of flow, at minimum slope of 2 percent, unless otherwise indicated.

2. Install piping with 36-inch minimum cover.

F. Extend sanitary sewerage piping and connect to building's sanitary drains, of sizes and in locations indicated. Terminate piping as indicated.

G. Tunneling: Install pipe under streets or other obstructions that cannot be disturbed by tunneling, jacking, or a combination of both.

3.6 PIPE JOINT CONSTRUCTION AND INSTALLATION

A. General: Join and install pipe and fittings according to installations indicated.

B. Refer to Division 2 Section "Utility Materials" for basic piping joint construction and installation.

C. Hub-and-Spigot, Cast-Iron Soil Pipe and Fittings: With rubber gaskets according to CISPI's "Cast Iron Soil Pipe and Fittings Handbook." Use gaskets that match class of pipe and fittings.
   1. Install PE film, pipe encasement over hub-and-spigot, cast-iron soil pipe and fittings according to ASTM A 674 or AWWA C105.

D. Hubless Cast-Iron Soil Pipe and Fittings: With CISPI-type couplings according to CISPI 310 and CISPI's "Cast Iron Soil Pipe and Fittings Handbook."
   1. Install PE film, pipe encasement over hubless cast-iron soil pipe and fittings according to ASTM A 674 or AWWA C105.

E. Hubless Cast-Iron Soil Pipe and Fittings: With heavy-duty-type couplings according to CISPI 310, CISPI's "Cast Iron Soil Pipe and Fittings Handbook," and coupling manufacturer's written instructions.
   1. Install PE film, pipe encasement over hubless cast-iron soil pipe and fittings according to ASTM A 674 or AWWA 105.

F. PVC Sewer Pipe and Fittings: As follows:
   1. Join pipe and gasketed fittings with gaskets according to ASTM D 2321.

   2. Join profile sewer pipe fittings with gaskets according to ASTM D 2321 and manufacturer's written instructions.

   3. Install according to ASTM D 2321.

G. System Piping Joints: Make joints using system manufacturer's couplings, unless otherwise indicated.

H. Join piping made of different materials or dimensions with couplings made for this application. Use couplings that are compatible with and that fit both systems' materials and dimensions.

I. Install with top surfaces of components, except piping, flush with finished surface.

3.7 CONCRETE PLACEMENT

A. Place cast-in-place concrete according to ACI 318 and ACI 350R.

3.8 CLEANOUT INSTALLATION

A. Install cleanouts and riser extension from sewer pipe to cleanout at grade. Use cast-iron soil pipe fittings in sewer pipes at branches for cleanouts and cast-iron soil pipe for riser extensions to cleanouts. Install piping so cleanouts open in direction of flow in sewer pipe.

B. Set cleanout frames and covers in earth in cast-in-place concrete block, 18 by 18 by 8 inches deep. Set with tops 1" above surrounding grade.

C. Set cleanout frames and covers in asphalt or concrete pavement with tops flush with pavement surface.

3.9 TAP CONNECTIONS

A. Make connections to existing piping and underground structures so finished Work complies as nearly as practical with requirements specified for new Work.

B. Make branch connections from side into existing piping, NPS 4 to NPS 20 (DN100 to DN500). Remove section of existing pipe; install wye fitting into existing piping; and encase entire wye with not less than 6 inches of concrete with 28-day compressive strength of 3000 psi.

C. Protect existing piping and structures to prevent concrete or debris from entering while making tap connections. Remove debris or other extraneous material that may accumulate.

3.10 FIELD QUALITY CONTROL

A. Clear interior of piping and structures of dirt and superfluous material as work progresses. Maintain swab or drag in piping, and pull past each joint as it is completed.
   1. Place plug in end of incomplete piping at end of day and when work stops.

   2. Flush piping between manholes and other structures to remove collected debris, if required by authorities having jurisdiction.

B. Inspect interior of piping to determine whether line displacement or other damage has occurred. Inspect after 18-24" of backfill is in place, and again at completion of Project.
   1. Submit separate reports for each system inspection.

   2. Defects requiring correction include the following:

      a. Alignment: Less than full diameter of inside of pipe is visible between structures.

      b. Deflection: Flexible piping with deflection that prevents passage of ball or cylinder of size not less than 92.5 percent of piping diameter.

      c. Crushed, broken, cracked, or otherwise damaged piping.

      d. Infiltration: Water leakage into piping.

      e. Exfiltration: Water leakage from or around piping.

3. Replace defective piping using new materials, and repeat inspections until defects are within allowances specified.

4. Reinspect and repeat procedure until results are satisfactory.

C. Test new piping systems, and parts of existing systems that have been altered, extended, or repaired, for leaks and defects.

1. Do not enclose, cover, or put into service before inspection and approval.

2. Test completed piping systems according to authorities having jurisdiction.

3. Schedule tests and inspections by authorities having jurisdiction with at least 24 hours advance notice.

4. Submit separate reports for each test.

5. If authorities having jurisdiction do not have published procedures, perform tests as follows:

a. Sanitary Sewerage: Perform hydrostatic test.

1) Allowable leakage is maximum of 50 gal. per inch of nominal pipe size per mile of pipe, during 24-hour period.

2) Close openings in system and fill with water.

3) Purge air and refill with water.

4) Disconnect water supply.

5) Test and inspect joints for leaks.

6) Option: Test ductile-iron piping according to AWWA C600, Section "Hydrostatic Testing." Use test pressure of at least 10 psig.

b. Sanitary Sewerage: Perform air test according to UNI-B-6.

1) Option: Test concrete piping according to ASTM C 924.

6. Leaks and loss in test pressure constitute defects that must be repaired.

7. Replace leaking piping using new materials, and repeat testing until leakage is within allowances specified.

END OF SECTION 33 30 00

SECTION 33 40 00 – STORM SEWER

PART 1. GENERAL

1.1 RELATED DOCUMENTS

A. Drawings and general provisions of the Contract, including General and Supplementary Conditions and Division 1 Specification sections, apply to work of this section.

1.2 DESCRIPTION OF WORK

A. Extent of storm sewer collection system work is shown on drawings. Storm sewer collection system work includes, but is not limited to, the following:

1. Trench drains
2. Private storm drainage piping
3. Storm drain inlet frames and gratings

B. Concrete is specified in Section 32 1313.

1.3 SUBMITTALS

A. Shop Drawings: Submit shop drawings for piping, fittings, trench drains, and area drain frames and covers.

PART 2. PRODUCTS

2.1 PIPING MATERIALS

A. General: Furnish ells, tees, reducing tees, wyes, couplings, increasers, crosses, transitions and end caps of same type and class of material as conduit, or of material having equal or superior physical and chemical properties as acceptable to the Architect.

B. Polyvinyl Chloride Pipe: ANSI/ASTM D 3034, Type PSM. Pipe shall have a minimum SDR of 35.

2.2 METAL ACCESSORIES

A. Area Drain Frames and Covers: Cast iron manhole frame and cover castings shall conform to ASTM A 48, Class 25C. The bearing surfaces of the frames and covers shall be ground and the cover shall seat firmly onto the frame without rocking. Tapered edges will not be acceptable. Frames and covers shall be as detailed on the drawings.

PART 3. EXECUTION

3.1 INSTALLATION OF SEWER PIPE

A. General:

1. The interior of the pipe shall be thoroughly cleaned of foreign material before being lowered into the trench and shall be kept clean during construction operations. When work is not in progress, the open ends of the pipe shall be securely closed so that no foreign materials will enter the pipe.

2. The Contractor shall install a plug in the new storm sewer at any point of connection to an existing system. The plug shall remain in place until the Inspector authorizes its removal in writing. The Contractor shall not flush or otherwise discharge any flow into an existing system unless approved in writing by the Architect/ Engineer.

3. Pipe shall be laid to line and grade as shown on the plans and as staked in the field. The bedding of the trench shall be graded and prepared to provide a firm and uniform bearing throughout the entire length of the pipe barrel. Suitable excavation shall be made to receive the bell of the pipe and the joint shall not bear upon the bottom of the trench. All adjustment to the line and grade shall be made by scraping away or filling in with pipe zone material under the body of the pipe, and not by wedging or blocking. When connections are to be made to any existing manhole, pipe, or other improvement, the actual elevation or position of which cannot be determined without excavation, the Contractor shall excavate for and expose the existing improvement before laying the connecting pipe or conduit.

4. Pipe shall be laid upgrade in a continuous operation from structure to structure, with the socket or collar ends of the pipe upgrade unless otherwise permitted by the Architect/Engineer.

B. Plastic Pipe:

1. Plastic sewer pipe shall be connected and placed in the trench in accordance with the manufacturer's recommendations. For plastic pipe connection to catch basins, core drill the existing concrete and use non-shrink non-metallic grout to fill annular space per City Standard Drawing No. 2237.

C. Final Clean Up: No rocks, dirt, joint compounds, cement mortar and other trash or obstructions shall be left in a storm sewer pipe of any size or type. During the flushing operations the downstream catch basin shall be bagged or plugged so that this debris will not be carried into or contaminate an existing or active line.

END OF SECTION 33 40 00